INFORMATION TO USERS

This material was produced from a microfilm copy of the original document. While the most advanced technological means to photograph and reproduce this document have been used, the quality is heavily dependent upon the quality of the original submitted.

The following explanation of techniques is provided to help you understand markings or patterns which may appear on this reproduction.

1. The sign or "target" for pages apparently lacking from the document photographed is "Missing Page(s)". If it was possible to obtain the missing page(s) or section, they are spliced into the film along with adjacent pages. This may have necessitated cutting thru an image and duplicating adjacent pages to insure you complete continuity.

2. When an image on the film is obliterated with a large round black mark, it is an indication that the photographer suspected that the copy may have moved during exposure and thus cause a blurred image. You will find a good image of the page in the adjacent frame.

3. When a map, drawing or chart, etc., was part of the material being photographed the photographer followed a definite method in "sectioning" the material. It is customary to begin photoing at the upper left hand corner of a large sheet and to continue photoing from left to right in equal sections with a small overlap. If necessary, sectioning is continued again — beginning below the first row and continuing on until complete.

4. The majority of users indicate that the textual content is of greatest value, however, a somewhat higher quality reproduction could be made from "photographs" if essential to the understanding of the dissertation. Silver prints of "photographs" may be ordered at additional charge by writing the Order Department, giving the catalog number, title, author and specific pages you wish reproduced.

5. PLEASE NOTE: Some pages may have indistinct print. Filmed as received.

Xerox University Microfilms
300 North Zeeb Road
Ann Arbor, Michigan 48106

Downloaded from SHAREOK. Persistent Handle URL: https://hdl.handle.net/11244/3897

75-15,243

ALGUIRE, Robert Thornton, 1937-
COMPUTER MODEL FOR REGIONAL PLANNING OF WATER AND SEWER SYSTEMS.

The University of Oklahoma, Ph.D., 1974
Engineering, civil

Xerox University Microfilms, Ann Arbor, Michigan 48106

THIS DISSERTATION HAS BEEN MICROFILMED EXACTLY AS RECEIVED.

THE UNIVERSITY OF OKLAHOMA

GRADUATE COLLEGE

COMPUTER MODEL FOR REGIONAL PLANNING OF WATER AND SEWER SYSTEMS

A DISSERTATION

SUBMITTED TO THE GRADUATE FACULTY

in partial fulfillment of the requirements for the

degree of

DOCTOR OF PHILOSOPHY

BY

ROBERT THORNTON ALGUIRE

Norman, Oklahoma

1974

COMPUTER MODEL FOR REGIONAL PLANNING

OF WATER AND SEWER SYSTEMS

Approved by

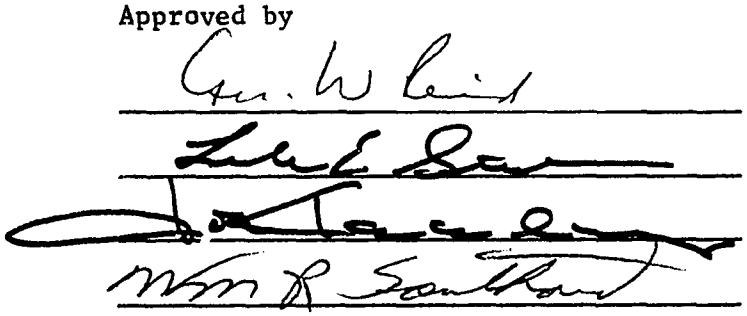

Dissertation Committee

ACKNOWLEDGEMENTS

I wish to express my sincere gratitude to the individuals who made significant contributions to this work. Professor George W. Reid must be singled out for his guidance, encouragement and patience.

Acknowledgement is extended to the other members of my committee for their guidance and assistance; Dr. Leale E. Streebin, Professor J. W. Keeley, and Dr. William R. Southard. Further, my appreciation is given to David Morgan and Gary Crews for their invaluable assistance in programming and to Dr. Silas Law who assisted in the preparation of the final report.

I wish to express my thanks to the Office of Water Resources Research, Department of the Interior, for their financial support in pursuit of this study and the continuation of my education.

For the love and understanding I received from my wife, Michel, and my children during the preparation of this manuscript, I give a special thanks that cannot be expressed in words alone.

TABLE OF CONTENTS

ACKNOWLEDGEMENTS iii

LIST OF TABLES vi

LIST OF FIGURES vii

ABSTRACT viii

Chapter

I. INTRODUCTION 1

1.1 Objectives 1
1.2 State of Art 2
1.3 General Methodology 5

II. DATA PREPARATION AND THE POPULATION MODEL 13

2.1 Introduction 13
2.2 Sewer and Water System 13
2.3 General Data 15
2.4 Population Model 15

III. LAND USE 23

3.1 Introduction 23
3.2 Inventory Procedures 25
3.3 Land Use Projections 26
3.3.1 Professional Planner Method 26
3.3.2 Analytical Methods 28
3.3.3 Analyst - Planner Approach 30
3.3.4 "Hard-Core" Mathematical Modeling 30
3.4 Land Use Validation 32
3.5 Data Level Theory 33

IV. DEMAND MODEL 34

4.1 Introduction 34
4.2 Model Description 34
4.2.1 Model Concept 35
4.2.2 Model Methodology 38
4.3 Data Requirements 50
4.3.1 Input 50
4.4 Data Arrangement 58
4.5 Model Format 58
4.5.1 Input Data 60
4.5.2 Main Demand Model 64

Page

4.6 Model Validation 78

V. WATER NETWORK MODEL 87

5.1 Introduction 87
5.2 Network Formulation 88
5.3 Model Description 97
5.3.1 Water Source Costs 100
5.3.2 Transmission Costs 102
5.3.3 Treatment Costs 104
5.3.4 Distribution Costs 106
5.3.5 Total Costs 106
5.4 Data Requirements 139
5.5 Data Arrangement 144
5.6 Model Format 147
5.7 Model Validation 165

VI. SEWER NETWORK MODEL 169

6.1 Introduction 169
6.2 Network Formulation 170
6.3 Model Description 173
6.4 Data Requirements 174
6.5 Data Arrangement 175
6.6 Model Format 175
6.7 Model Validation 175

VII. DEVELOPMENT OF THE WATER AND SEWER PLAN 183

7.1 Introduction 183
7.2 Analysis of Alternatives 185
7.3 Limitations and Future Research Needed 186

LIST OF TABLES

Table		Page
4-1	Main (Demand)	39
4-2	Subroutine Watout (KTYP, KKK)	46
4-3	Subroutine Write (KH, KL)	47
4-4	Subroutine (KTYP, KKK)	48
4-5	Subroutine Swsout (KKK)	49
5-1	Main	111
5-2	Subroutine Prelim	112
5-3	Subroutine Cutoff	114
5-4	Subroutine Arcrd	115
5-5	Subroutine Noderd	118
5-6	Subroutine Postrd	119
5-7	Subroutine Solve	122
5-8	Subroutine Kilter	125
5-9	Subroutine Breakt	126
5-10	Subroutine Raise	128
5-11	Subroutine Output	130
5-12	Subroutine Label	134
5-13	Function Nodeno	136
5-14	Function Lookup	137
5-15	Logical Function Equal	138

LIST OF FIGURES

Figure		Page
1-1	System Sector Relationship	6
1-2	Operational Flow Chart	8
1-3	Planning Process	10
2-1	1990 Population Projection	18
2-2	United States - U. S. Census Series C	19
2-3	United States - U. S. Census Series C	20
2-4	Household and Income Characteristics	21
2-5	Population by Occupation 1990	22
4-1	Coding of Streams and Watershed.	37
4-2	Demand Data Deck Set-Up	59
5-1	Existing Metropolitan Study Area	90
5-2	Future Requirements	94
5-3	Example of Flow Net	141
5-4	Linear Cost Functions	143
5-5	Average Daily Flow Net	166
6-1	Major River Basins	172
6-2	North Canadian River Basins (Plant Selection)	178
7-1	Final Procedure Outline	184

ABSTRACT

The objective of this study was to take an existing model that was capable of projecting both population and demand and evaluating a selection of network models in order to derive a practical planning technique for regional water and sewer systems. This research had as its goal the development of a usable tool that would give the average planning group a systematic approach for analyzing water and sewer networks -- a technique, which upon completion, would be functional without modification, for any type or size of region.

This was accomplished by the construction of six procedures which used three computer models: the inventory and data projection procedure which provides the input; the population model and procedure which generates the desirable alternatives in terms of people and their socio-economic characteristics; the land use procedure which allocates the output of the population model to an areal scheme; the demand model and procedure which produces the water demand and sewage output for the given areal scheme; the network model and procedure which optimizes on a least cost basis, while maximizing utilization of resources, the networks of water and sewerage that fulfill the alternatives available; and finally the plan procedures for the development of a continuing and comprehensive plan.

The steps between each procedure have built-in planner intervention points where the using group may "game" new alternatives based on the results and data acquired from the previous procedure. The procedures and models have relaxed the tedious process necessary to formulate a regional plan. The

techniques are spelled out on a step-by-step basis and all procedures and models are fully operational. The flexibility of the approach can only be realized when one applies it to an area and procedes to the gaming of each alternative against the desired future worlds.

This report is a portion of a major research grant from the office of Water Resources Research of the Department of Interior which is uniquely the author's. The total concept can be reviewed by reading the final report on "Systems Approach to Metropolitan and Regional Area Water and Sewer Planning." This report was co-authored by George W. Reid and Robert T. Alguire for OWRR in May, 1973.

COMPUTER MODEL FOR REGIONAL PLANNING OF WATER AND SEWER SYSTEMS

CHAPTER I

INTRODUCTION

1.1 Objectives

The prime objective of this research has been to develop a systems approach which would provide a practical method of planning regional water and sewer systems. The proposed techniques will equip the urban planner with the methodology for the selection of an optimal "plan" and for the establishment of the conditional boundaries from the solutions of all foreseeable developments. Using this approach, the model then becomes an effective tool in planning, for it not only furnishes the necessary output on which the planner can develop the water and sewer plan, but it also gives him the capability of gaming all the alternatives for each of the possible worlds.

It is this approach that makes this research unique. The basic approach from the very start was to develop a model that did not produce a mathematically elegant solution from the basic input data. The model, with built in intervention and decision levels for the user, was designed to proceed in steps. At each step the user explores all possible solutions and decides the possible worlds to be evaluated in the next level. This not only gives the operator the flexibility of gaming other alternatives but forces intervention and evaluation of alternatives based on the previous levels prior to proceding to the next phase.

If one evaluates the past efforts of others in this area, the greater part of this work is polarized as mathematically elegant at one end and scenarios on the other. It was,therefore,decided that this work would be dedicated to the fulfillment of the need for a system that lies somewhere between these two poles, a system that would not generalize in broad overall solutions nor run through complicated algorithms using specialized and expensive data inputs to "the solution".

It is to this approach that this research is dedicated. It is a system that not only employs readily available data for each phase, but one that forces the user to evaluate the results and alternatives produced at each level prior to proceeding to the next phase. Thus it insures that the user understands the results and commitments made previously. It is an approach in which a planner can re-evaluate new alternatives as they are developed and, most of all, it is a system that does not provide a "solution", but the data on which meaningful planning decisions can be evaluated and made.

1.2 State of the Art

A review of literature can best be stated by using a computer information retrieval system known as GIPSY to search the Water Resources Scientific Information Center (WRSIC) file compiled by the Office of Water Resources Research. This file is maintained by WRSIC and contains all the pertinent literature in the field of water research. This research of the files led to a large number of related articles. A review of these abstracts revealed that only a limited number were applicable to large areas on a regional basis. Of these, only a few were directly related to this study. Most dealt with specific regions and were geared to data collection, definable problems, or the development of general and specific recommendations related only to that defined region.

The ones that did offer new concepts, applicable methodology and modeling techniques, or pertinent conclusions are reviewed in this section. The general trend being followed is best summarized by Robert Dorfman (1), who states: "New methods for designing water resources systems are being evaluated as part of a general social tendency toward expressing social problems in the formal modes that have been restricted to scientific and engineering problems." This evolution has been following two general types of models -- simulation and analytical. The simulation is the use of algorithms, usually on computers, to depict sequential time changes of events. This method produces estimations of situations at a projected time under control of specific decisions. The analytical models used explicit mathematical functions of design variables to predict efforts of time.

In the area of planning and resource management models, variations of linear and non-linear programing have been used extensively. Linear programing was used because of the unique min-max capability, and because if all functions can be reduced to a linear foremat, the solutions are usually simple. This is rarely the case, however, since most functions over time are non-linear, especially cost. When one forces linearity, the accuracy of his simulation is reduced. This has given rise to the use of non-linear programing. Since general non-linear solutions get extremely difficult, most work in this area has been with defined, such as concaved, non-linear functions. D. P. Loucks (2) used this method for the solutions of branching multi-stage river-reservoir problems.

John Dracup (3), using an algorithm of parametric linear programing, developed a model of the San Gabriel Valley in Southern California for surface and ground water. The study used five sources to meet three requirements

over the period from 1960 to 1990. This method is described as an effective guide for long-range optimum decision-making for water-resources systems. S. C. Parikh (4) and R. C. Harboe (5) used dynamic programing in their respective models to solve problems on firm energy production. The Parikh model used two actual reservoirs in Northern California to validate the model and also to check the effect of non-covexity on the constraint set. Harboe used incremental dynamic programing techniques to solve an objective function for multiple purpose water systems expressed in physical terms. Both models optimize the use of interconnected water reservoir systems. In the area of resource allocation models, Reynolds and Conner (6) developed an economic allocation model, which is based on the assumption that the prevailing goal of society is strictly economic. Also, along this line of thinking, Guise and Flinn (7) used non-linear programing to maximize social payoffs for large scale water resource development. This model was then applied to the Nurumbidgee irrigation area of New Wales (8).

Supply and demand models, which are the major thrust of this research, were initiated at the University of Oklahoma by George W. Reid (9). The basic model uses demographic data and economic inputs to provide outputs for statistical areas. This research provides the basic input for the model that will be developed in the following chapters. Delucica and Rogers (10) used the North Atlantic Region (NAR) to develop a model that had a non-linear objective function and linear constraints. This model minimized efficiency costs and was based on a critical period analysis and selected risk levels.

The area of simulation has produced several applicable techniques of water system management. Beard and others (11) used simulation on a simplified version of a proposed Texas water system. The techniques, network analysis

and sequential search, are compared over a 17 year period under variations of inputs and demands.

Dracup and others (12) developed a model to predict available water supply using long term precipitation data to generate the runoff in a regional water basin. Dracup (13) then worked on the conjunctive use of ground water systems by maximizing benefits and minimizing cost. This process used linear and dynamic programing to study the capabilities of the system and then compared their effectiveness.

1.3 General Methodology

The model, which is discussed in detail through all phases by Reid and Alguire (14), was an extension of previous work done by Reid (9). This concept starts with three sectors -- Demographic, Industrial, and Agricultural. Each of these sectors are measured and evaluated within the framework of the existing political system. This evaluation becomes an information system which is projected into the future within the time frame of the study. The past, present and future sectors of the information system are applied to the water and sewer system in order to develop the "plan", as shown in Figure 1-1.

The information system is developed out of each sector. The demographic sector, which relates to population in the urban and rural areas, is measured on a per capita basis. This includes all categories of operation from the domestic, commercial, and public life styles. The industrial sector, on the other hand, is measured in terms of manufacturing uses of water. It is segregated into the Standard Industrial Classification (SIC) codes and is measured on a per employee basis for each two digit code. Agricultural sector is measured on a per acre basis and is that quantity of water used for

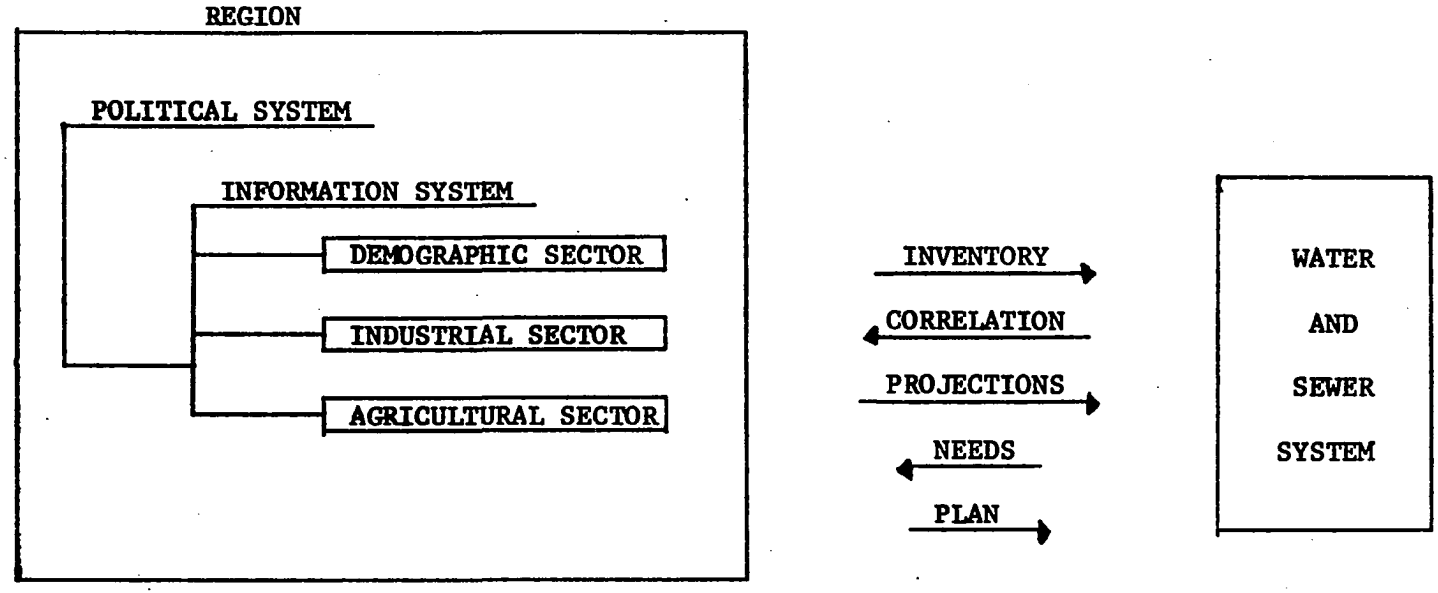

Figure 1-1. System Sector Relationship

irrigation of crops. This information system is derived from a procedure of data collection or inventories in each sector, and the water and sewer system. The procedure developed was designed to use data which is relatively easy to acquire and update. Data that has to be specifically developed for a study and for each new update is of questionable value. Data, if at all possible, should be acquired or derived from sources that are not only already available but which are also updated periodically by assignment. This creates a study which is not only comprehensive, but also has a built-in capability to be used continually at a minimum of cost.

After collection, the data is then projected through the time frame of the study, in this case twenty years (see Figure 1-2). This time frame can be any length of time that is divisible into five year increments from the base year. This five year increment was selected because it is the most realistic time frame in which projections can be made with a high degree of accuracy before updating the base data. This then requires the project to be self-continuing on a five year cycle. Therefore, it becomes the first built-in intervention step in the system.

This intervention is one of the primary goals that was established at the very outset of the study. It is the very heart of a practical system in planning. A system that is mathematically simulated through the time frame of the study and requires only the input data to produce "THE PLAN" out of the other end, has failed to be of practical use. Even if the answer produced is relatively accurate, the use of a plan that is not fully understood by its users and which locks them in on one solution cannot be fully justified. It is not realistic to plan that far in advance without approaching it on an incremental basis.

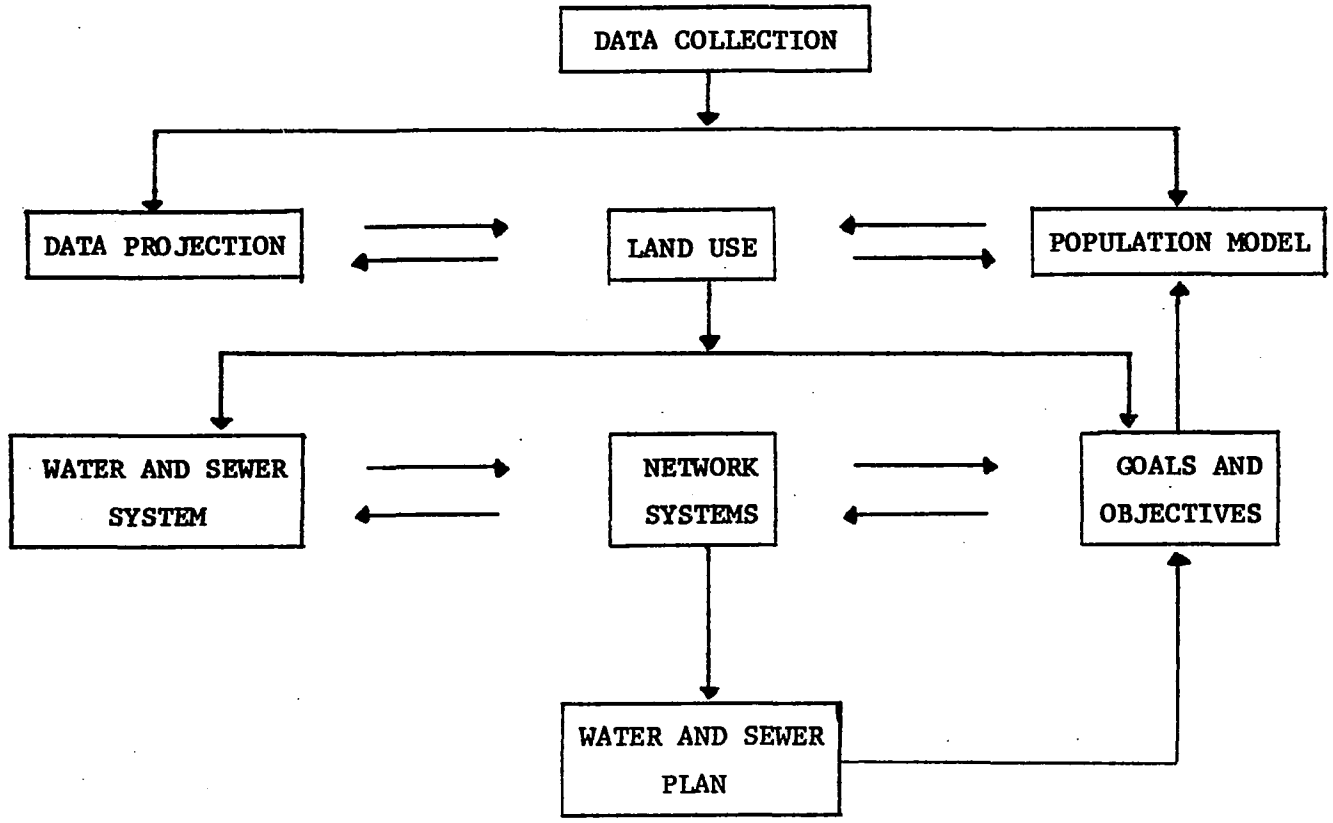

Figure 1-2. Operational Flow Chart

When one uses this incremental approach, he is forced to understand the system. Each step requires a review of how the previous alternatives changed the system and a decision as to which of these alternatives will be applied to the next time increment for evaluation. This then leads to the technique developed by Reid (9, 14) of projecting the data based on the use of goals. Reid set these goals as probable, practical and possible as shown in Figure 1-3 (14).

A possible world is one that a user would strive for. It might even be described as idealistic. These possible goals, although idealistic, must be tempered with judgment. The capability of a primary arterial street system to function, even during peak hours, in an uncongested state or adequate water even for peak summer loads on a continuous basis are the possible goals. It would take heavy dedication of resources that are also needed in other areas, but these goals are attainable.

The probable goals are those that are attainable if the system is allowed to "drift" into the next time increment using the non-systems approach -- an approach that is based on the political and socio-economical demands without strong requirements for realistic planning. This system usually lags behind growth and can be wasteful of resources.

The practical goals are the ones in which we are striving to identify with this process and they lie somewhere between the possible and the probable goals.

The identification and projection of these two latter goals established the boundaries of the envelope in which the practical solutions will lie. This establishes in the mind of the user the constraints of the system. As he looks at the alternatives open in that time increment, he can more

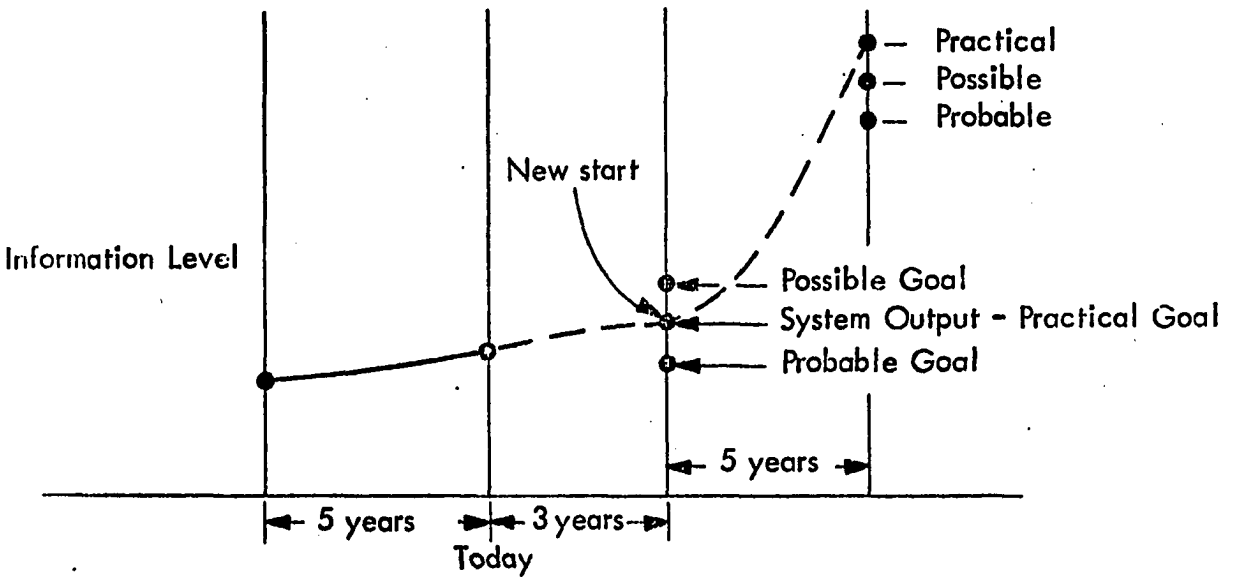

Figure 1-3. Planning Process.

realistically reach the practical goal for that time increment. This practical goal, or a selection of practical goals, becomes the data base for the next time increment.

After the information system has been identified and projected into the time frame of the study, the actual computerized system begins. A Cohort-Survival Population Model takes this data and "grows" the region into the future. The output of this program is extensive and gives most of the demographic information required for developing the system. It also has the greatest capability of gaming alternatives for future goals. One can look at the demographical consequences of what possible alternatives might bring. A decision to pursue heavy industry will bring jobs and economical rewards, but also heavy water and sewer requirements. Large amounts of people and socio-economical problems will also arise with this "boom" of prosperity. As one watches these decisions grow into the future, he becomes aware of the ramifications each alternative brings.

This is the beginning of intuitive planning -- a realization that practical goals are those that are not only obtainable, but ones that the total system can afford. Many possible goals can be acquired in a regional system, but if the user is not "growing" his comprehensive plan through the time frame, he may achieve a set of goals that cost the system more resources than it will ever have or be able to acquire -- a position that many of our larger metropolitan regions find themselves in today.

The demographic data is then allocated to an areal scheme for each increment. These schemes are based on the population projections of the alternatives that the user wanted to investigate. Again the user is asked to intervene and select alternatives for investigation. The selection of these schemes

has vast ramifications on the water and sewer system of the region, to say nothing of the other systems, such as transportation and education, inherent to this region. The user may wish to "game" alternatives to verify which are practical and warrant further investigation and those which do not.

These selections are then used as input to the demand model. This program computes the amount of water that each statistical area unit (SAU) needs and their discharges. These demand functions were derived from the information system and depict the demands in any of several areal formats. One can investigate the requirements of political boundaries, and the loadings on particular sources and treatment facilities. For each areal scheme these demands can be projected and evaluated before the selection of the alternative to be processed into the next phase.

The final program is a network model which evaluates the capacities and cost funtions of the system. It will take each of these alternatives and determine the system's capability to be expanded in order to service the alternatives that the user has inputed into the region. This gives the user the answers to evaluate each alternative in the "selection" of a plan; not a plan that a system of models says is the solution.

As the user progresses through this methodology, he should become aware that this system is a practical approach to a most complicated process. There is no single solution, but a step by step process, where one is trying to achieve a practical goal that best benefits his region. It is a process that requires constant evaluation of where the system is and where it is going. Only then can one hope to produce a systematic approach to a problem that changes as fast as our modern society.

CHAPTER II

DATA PREPARATION AND THE POPULATION MODEL

2.1 Introduction

This chapter is a review of the data collection procedures and the population model. This information is covered in detail by Reid and Alguire (14) if a more comprehensive explanation is desired. Many of these procedures were originally formulated by Reid (9) and later modified for this particular study. The study by Reid was originally done for a defined area and therefore required a certain amount of alterations for general use.

The principles of the population model are basically unchanged from the work done by Reid, although several of the subroutines were modified. Most of the modifications were done in the area of input data requirements. Subroutines were added to compute the intermittent cycle data points internally. This was done in order to reduce the large quantities of input data that this model requires. The population model was also altered in the procedures for handling migration. This was modified so that the model could be "gamed" through alternatives with little change in the input data. These changes are covered in detail in the report to OWRR and will not be covered in this study.

2.2 Sewer and Water System

The most demanding of the data collection is that of the water and

sewer system. A complete information file is required for this area of the study. The exact methodology required is again detailed in the OWRR Final Report and only the general requirements will be covered here.

A complete inventory of all resources, available and projected, is the first step. Each source is identified as to quantity, quality, and capability. This includes all projects existing and "in the mill", and gives the user an idea as to the region's capabilities, both immediate and in the near future. The next phase is the evaluation of the network that connects the sources with the treatment and distribution systems. Finally, the actual distribution system is inventoried.

The economic analysis of the water system is the next phase of the inventory and data collection. Each segment of this system, from source to distribution, is evaluated on a cost basis. The operating cost of all phases is determined and the debt structure is analyzed. This information includes the estimated life and expansion capabilities. The cost data is tabulated as fixed and variable. The variable data is computed on a million gallon per day basis. Upon completion, the user should have a complete understanding of the limitations and capabilities of the water system.

Basically, the same process is repeated for the sewer network. One of the main differences is an analysis of the capabilities of the receiving streams to handle the effluent. This can be a major control point and must be carefully evaluated. Again, the importance of the cost analysis cannot be overestimated, for on these cost figures all projection of practical goals rely. They determine the accuracy of the projected plan and its relationship to the real world. A plan that looks good but is

economically unachievable is an exercise in futility.

The next phase that must be accomplished is the determination of the demand function for each sector. This was done from the past records of water use and discharge for each category (see Chapter IV for listing). After this data was accumulated and categorized, it was projected using regression analysis. A linear equation was developed for each category. The industrial sector produced a large number of linear equations with zero slope. This can be expected when production is directly related to the number of employees and the production techniques are fixed. If some industries, especially significant users, do not fit into their category because of some unique manufacturing process, they can be inputed as special users and are handled separately in the demand model.

2.3 General Data

This portion of the data collection is the thing that makes this region unique. It calls for a review of all local, regional, and state statutory regulations and controls; the political boundaries and agencies that make up the region; and a review of their past cooperative projects, which will also prove beneficial for future recommendations. This section more or less establishes the rules and regulations under which this region is operating. It will allow the user to select more realistic alternatives for "gaming" the computer runs and to avoid any that are not practical or legal.

2.4 Population Model

The data requirements for this model are mainly available from the U. S. Census Reports and are augmented and verified by local and state data sources.

All of the input and projections are easily attainable or derived from these sources. The method used by Reid and Alguire (14) is by no means absolute but is discussed and verified in that report.

The model has a multiplicity of capabilities designed into it. The output can be for any arrangement of three disaggregated regions, usually United States, State and Region. The model will handle any size area from a city to a nation, and project the data in five year cycles from the base year to any projected year desired. The rapidity with which our society changes precludes the running of the model much past twenty to thirty years except for general information.

The model output (see Figures 2-1 through 2-5) gives the population by age, sex, and race for each area and five year period. This population projection is then further divided into areas of specific interest. The first area, using the same format as the base population projection, is the migration that has occurred within that area during the last five years. If the data is positive, the migration has come into the area.

The rest of the output gives a good chronographic profile of the area. It contains the income levels and distribution that occur during that time. The distribution that occurs at each income level is further categorized by the number of households and total labor force. This data is then summarized at the bottom of the output sheet (see Figure 2-4).

Finally, the information is displayed as to the population that exists in each category of occupation and industry. This will give the user a good demographic profile of the population at each time cycle. This data is used to project land use (see Chapter III).

When the population model is run for the period of the study, the user can quickly visualize the demographic profile of the region as it grows through time under a selected alternative or set of goals. It is this capability that makes this model unique. It has been used successfully for all types of areas and its full capability as a planning tool has yet to be realized.

1990 POPULATION PROJECTION

UNITED STATES - U.S. CENSUS SERIES C
SCALE FACTOR =1000.

AGE	WHITE MALE	WHITE FEMALE	NON-W MALE	NON-W FEMALE	TOTAL WHITE	TOTAL NON-W	TOTAL MALE	TOTAL FEMALE	TOTAL POP.
0- 4	10712.	10257.	2627.	2342.	20969.	4969.	13339.	12599.	25937.
5- 9	9992.	9650.	2613.	2225.	19642.	4838.	12605.	11875.	24480.
10- 14	9023.	8754.	2444.	1999.	17778.	4443.	11467.	10753.	22220.
15- 19	8142.	7919.	2214.	1698.	16061.	3912.	10356.	9617.	19973.
20- 24	7105.	6880.	1727.	1337.	13985.	3064.	8832.	8217.	17049.
25- 29	8419.	8210.	2146.	1555.	16629.	3701.	10565.	9766.	20330.
30- 34	8721.	8598.	2277.	1595.	17319.	3872.	10998.	10192.	21191.
35- 39	7969.	8020.	1947.	1389.	15989.	3336.	9916.	9409.	19325.
40- 44	6670.	7246.	1294.	1121.	13915.	2415.	7964.	8367.	16331.
45- 49	5607.	5843.	910.	875.	11451.	1785.	6517.	6718.	13235.
50- 54	4663.	4887.	705.	749.	9550.	1454.	5368.	5635.	11004.
55- 59	4380.	4698.	598.	686.	9078.	1285.	4979.	5384.	10363.
60- 64	4476.	5013.	543.	642.	9490.	1186.	5020.	5656.	10676.
65- 69	4137.	4964.	452.	536.	9102.	988.	4589.	5501.	10090.
70- 74	3313.	4299.	325.	411.	7612.	736.	3638.	4710.	8348.
75- 79	2430.	3499.	223.	307.	5929.	530.	2653.	3806.	6459.
80- 84	1557.	2569.	140.	214.	4126.	353.	1697.	2782.	4480.
85 +	1279.	2444.	135.	240.	3723.	375.	1413.	2685.	4098.
TOTAL	108595.	113752.	23320.	19921.	222347.	43241.	131915.	133674.	265588.
PERCENT	40.9	42.8	8.8	7.5	83.7	16.3	49.7	50.3	100.0
MEDIAN AGE	30.5	33.0	25.1	26.2	31.8	25.5	29.4	32.0	30.7
SEX RATIO					955.	1171.			987.

Figure 2-1.

UNITED STATES - U.S. CENSUS SERIES C

1990

AGE GROUP	NET MIGRATION(X1000.) WHITE FEMALE	NON-W FEMALE	WHITE MALE	NON-W MALE	TOTAL
0 - 4	135.	14.	186.	15.	350.
5 - 9	115.	13.	155.	18.	301.
10 - 14	77.	8.	116.	13.	214.
15 - 19	119.	9.	154.	11.	294.
20 - 24	191.	27.	181.	13.	412.
25 - 29	174.	27.	260.	21.	483.
30 - 34	118.	28.	221.	22.	390.
35 - 39	94.	18.	145.	15.	272.
40 - 44	46.	7.	48.	7.	109.
45 - 49	28.	4.	30.	4.	66.
50 - 54	24.	3.	13.	3.	43.
55 - 59	24.	3.	19.	3.	49.
60 - 64	17.	2.	14.	3.	37.
65 - 69	15.	1.	4.	3.	23.
70 - 74	8.	2.	3.	2.	14.
75 - 79	2.	0.	2.	0.	3.
80 - 84	2.	0.	0.	0.	2.
85 +	0.	0.	0.	0.	0.
TOTAL	1189.	168.	1552.	152.	3061.

Figure 2-2.

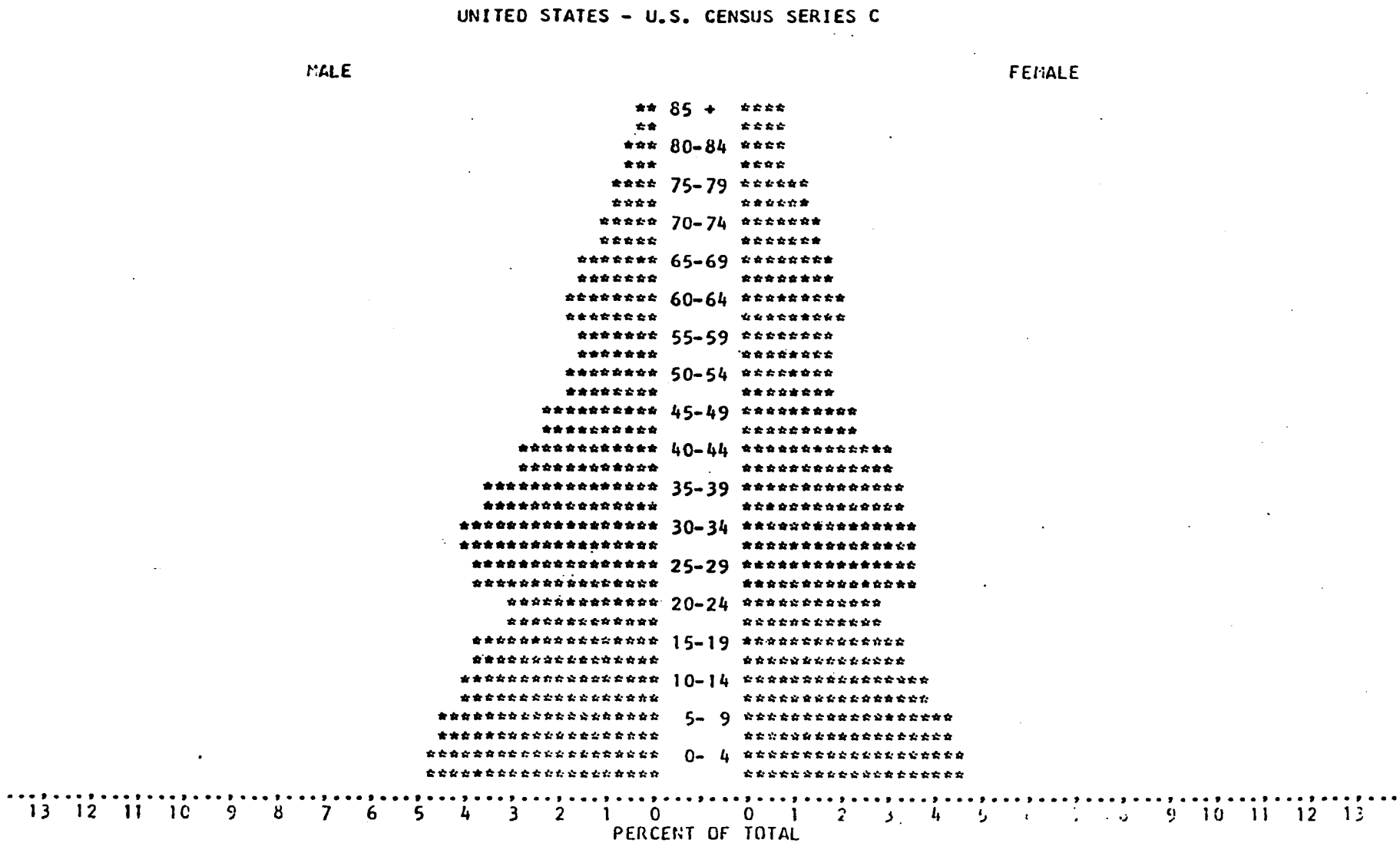
UNITED STATES - U.S. CENSUS SERIES C
MALE
FEMALE
85 +
80-84
75-79
70-74
65-69
60-64
55-59
50-54
45-49
40-44
35-39
30-34
25-29
20-24
15-19
10-14
5- 9
0- 4
13 12 11 10 9 8 7 6 5 4 3 2 1 0
0 1 2 3 4 5 6 7 8 9 10 11 12 13
PERCENT OF TOTAL

Figure 2-3.

UNITED STATES - U.S. CENSUS SERIES C
HOUSEHOLD AND INCOME CHARACTERISTICS

1990

INCOME	NUMBER OF HOUSEHOLDS	NUMBER IN LABOR FORCE
0 - 999	1086	2702
1000 - 1999	946	2354
2000 - 2999	963	2396
3000 - 3999	681	1694
4000 - 4999	800	1991
5000 - 5999	932	2319
6000 - 6999	1074	2673
7000 - 7999	1227	3053
8000 - 8999	1386	3449
9000 - 9999	1553	3865
10000 -10999	1723	4288
11000 -11999	1895	4716
12000 -12999	2067	5144
13000 -13999	2236	5565
14000 -14999	2400	5973
15000 -19999	14031	34921
20000 -24999	10529	26205
25000 -49999	28555	71069
50000 +	7434	18502

TOTAL HOUSEHOLDS	81519	PER CAPITA INCOME	6717
MEDIAN INCOME	22734	POP. IN GROUP QTRS.	7170
AVERAGE INCOME	21885	AVE. LABOR FORCE INCOME	8793
AVERAGE FAMILY SIZE	3.17	TOTAL PERSONAL INCOME	1784067.

Figure 2-4.

UNITED STATES - U.S. CENSUS SERIES C
POPULATION BY OCCUPATION
1990

OCCUPATION	POPULATION
PROFESSIONAL	31170.
MANAGERS	30049.
CLERICAL	34475.
SALES	8143.
FARMERS	5911.
FARMLABORER	3739.
SKILLED LBR	19122.
OPERATORS	26475.
HSEHOLD WKRS	719.
SERVICE WKRS	20906.
LABORERS	6977.
UNEMPLOYED	8554.
NOT EMPLABLE	62700.
ARMED FORCES	6649.
TOTAL	265588.
% UNEMPLOYED	4.36

TOTAL LABOR FORCE BY INDUSTRY
1990

INDUSTRY	LABOR FORCE
AGRICULTURE	0.
MINING	13811.
CONSTRUCTION	21946.
MANUFACTURNG	47310.
TRANSPORTION	10172.
TRADE	14670.
FINANCE	3211.
SERVICES	38124.
GOVERNMENT	40498.
TOTAL	196240.

Figure 2-5.

CHAPTER III

LAND USE

3.1 Introduction

The development of a truly usable comprehensive land use model has eluded society, even with its modern technology and equipment. A model that could be used by most urban areas and one that would give realistic projections of future land use is obviously a very desirable goal, but this model constantly escapes the practical because of the complexities that exist in each new increment of time and the existence of complicated social, economical, and political ramifications that occur with each new change.

Most professionals in this area can give an extensive report on the problems of developing a land use plan for the future and then achieving that goal. Many planning agencies use the plan only as a "guide" that is subject to change at each commission or committee meeting, subject as it were to an unpredictable array of pressure groups. With each change a myriad of new requests and side-effects results that dominate the plan until it becomes worthless.

There have been many models that have been developed for a particular metropolitan area, but these models soon become so specialized and complex that they become "computer school exercise type games" or an exercise in sophisticated programming techniques. It then takes, even with highly qualified personnel, longer to set up, de-bug, run, and interpret the data than it does for the land use to change .

As noted by Fredrick Bair, "The planner who produces a working comprehensive plan for now and the short-range future has done a highly commendable job. Of course, it will fade off at the edges five or six years ahead -- and it should." (15) It is this type of thinking coupled with the fact that the urban system is already operating on networks that are outdated, inadequate, and/or already capacitated, that proves the fallacy of <u>detailed</u> long range land planning and models.

As discussed in a special study of "Downtown Idea Exchange"(16), the future roles of downtown, and hence the urban area in total, cannot be agreed upon. What part will each portion of the city play 20 years from now? Will the Central Business District (CBD) be the "heart" and be revitalized with tremendous capital investment, or will the urban region "disperse" into self-sustaining new towns, or will the CBD be left to die and change like a living "Donut"? These, and many similar, are very complicated questions, and "which one is right?", if any <u>one</u> really is, becomes a whole new problem.

Add to this already entangled problem the current financial problems, environmental pollution, and the ensuing energy crisis, then one can quickly realize not only the difficulty, but the requirement for long range planning. It is almost like saying that the problem cannot be solved on one hand, while saying that is <u>has</u> to be solved on the other.

"The art of planning" needs to take a more realistic look at the future. The future plan should be developed to fit the "established goals" and, within the range of known or foreseeable trends, made to achieve this "desirable" world. It should not be allowed to "drift" to what could be construed to be a "probable" world.

The plan is developed knowing that the area will end up as what was described in Chapter 1, as the "practical" world. The planning agency must also realize that the "practical" world is not a fixed point in the future, but an identity that will not be known until it has been past, and the agency has had enough time to look back. To this end the author will identify these needs and the methods used to attain a portion of them.

3.2 Inventory Procedures

The current land use procedures are dependent on the specific metropolitan area under study. Most areas have a metropolitan planning agency and an individual planning department. These agencies and departments should have current land use descriptions for their respective areas.

The problem then becomes just a matter of coding this data into the structure of these models. This, of course, depends on how detailed their information is and how current. The information is placed into the SAU's as discussed in Chapter IV. The SAU's in the validation portion of this model were square miles or multiples of square miles for the rural country (1 to 6). This method fitted our coding system and allowed for easy adjustment for project land use changes. This was also the format used by ACOG, who furnished this data.

Assignment of population, institutional (general), and commercial, was accomplished using in this instance, ACOG's information and census data. It is important to check that the population assignment to all SAU's sums to the actual population of the area. The special land use data, such as hospitals, educational institutions and military installations, were acquired from the sources described in Appendix A (14).

A major portion of this effort should be spent allocating the employees

by SIC codes to each SAU. This information is also usually available at the planning agencies. It is obvious that this procedure is straightforward and can be accomplished by following the procedures outlined in Chapter II and Appendix A (14).

3.3 Land Use Projections

The projection of land use is a key input to any study. There are reasonable methods for projecting population, commercialization, industrialization, and life styles, but if it cannot be placed with any degree of accuracy, then the whole process has lost most of its value. One could depict the total needs of the area, but optimizing sources, networks, or facilities would be impossible. Therefore, one must expend his best efforts towards the accomplishment of this goal.

There appear to be several good and reasonable techniques used for the accomplishment of this goal. The methods we found most practical in our research are presented below. It must be remembered that the purpose of this step is to take the desired goals and life styles and project this area into the best "desired" world that can be visualized by the concerned agencies. This can and is being accomplished in many ways. Some agencies have even been accused of "playing God" or to the other extreme of building to enhance "vested interest". The best approach is, as always, to achieve the most good for the most people, while minimizing the inconvenience and maximizing the values.

3.3.1 Professional Planner Method

The projected land use and population distribution used in the validation of this model were acquired by the following method. The professional agency was the Association of Central Oklahoma Governments (ACOG) Planning Department.

The method basically is to provide the incremental population increases for the various life styles and allow the professional staff of the agency to allocate this population and its corresponding new and changed land uses to the study area. There are many advantages to this method, the greatest one being that the staff has "grown" with the area and is familiar with its trends and political nature. They also are well acquainted with the socio-economic patterns and their ramifications.

This method should give a more realistic view of the future to the study area, since the areas that are more likely to develop are given the higher priorities. The desires of developers and political interest groups are clearer and can be better evaluated by this agency. The planners are also familiar with other networks and systems of the region (transportation, air pollution, housing, etc.) and have a "feel" for the effect that certain modifications of existing and developing land use patterns will have on them. These systems and networks also can, and usually do, provide real and uncontrollable constraints to the growth patterns.

The disadvantages of this method are also quite distinct and can, in many instances, exceed the advantages. The most obvious one is created by the very nature under which these planning agencies are usually organized. Many of the planning agencies, such as ACOG, were organized to fulfill federal requirements under the Office of Management and Budget Circular A-95, using the enabling statutes of the Public Authority Act and the Intergovernmental Cooperation Act. The enabling statutes allow the organization of the COG's (Coalition of Governments), but the Circular requires that federal aid applications for over one hundred federal assistance programs, and most federal development projects, must be submitted through the designated

metropolitan clearinghouses, ACOG in this case. Although it was the intent of this legislation to encourage intergovernmental cooperation for full utilization of local resources, the political results are not always idealistic in nature. Each political identity is forced to join in order to receive federal aid upon which it has become dependent. Each with its own "goals" and "desires", which are not always compatible, is required to form and support yet another political organization that will develop new goals and a "desired world" which is usally, to some degree anyway, in conflict with the individual member's views. The largest conflict is generally between the COG and the largest political jurisdiction of that group, who has the greatest needs and population.

It is this built-in political strife that leads a metropolitan planning agency to define its "desirable world" against those of member political jurisdictions which are incompatible. This is also true, only in reverse, if a large political jurisdiction and its own planning agency are developing a plan of their own.

When the COG's or the planning area and all of its members start pulling together, by gaming the alternatives, and start striving for a common "desired world," then, and only then, will this disadvantage be resolved.

There are other disadvantages, mainly from an analysis standpoint. In other words, without complete analysis, the future land use developed by the planners may not give optimum solutions to all of the other networks and systems of the area under study. This leads to yet other approaches for land use forecasting.

3.3.2 Analytical Methods

The approach used here is one in which an analyst looks at the logical

approach without any knowledge of the area. The methods used vary greatly from one analyst to another but are basically optimization in nature. The analyst may want to minimize transportation costs and/or adverse environmental effects. He may also have as a goal to maximize socio-economic mixing of minority groups with the study area.

The analyst will take an optimization technique to achieve the plan within the constraints of the given goals. The more comprehensive the goals are, the more complicated this approach becomes. When a water and sewer plan is the desired result of his work, the analyst may be working only with the maximium utilization of the resources and existing facilities and minimizing costs to provide the future requirements.

Even when using the best intentions and current knowledge about land use planning, the analyst rarely achieves a plan that is acceptable to the entire area. He has no way of knowing the full ramifications of "his plan". An analyst can fall into the trap of "playing God" for the fulfillment of the optimal goal of dollars and cents. This happened with the transportation systems when freeways were allowed to divide, displace, and otherwise create severe hardships on people for the rapid movement of automobiles.

The socio-economic and long-term effects of this technique were slow in being realized. However, it has become increasingly clear that this technique does not produce a comprehensive plan without "local knowledge" being one of the inputs. The analyst who usually comes into the area for this job only does not have to produce a plan that he is then required to defend daily or to "live with".

It also becomes difficult for the existing local agencies to update or alter this plan. The techniques used are usually highly technical and complicated. The staffs of these local agencies do not always have the qualified

personnel to carry these techniques forward in time.

3.3.3 Analyst - Planner Approach

It has become obvious that of the first two approaches presented, a combination of the two will produce better results than either one individually. Ideally, the planning agency would have as an integral part of its staff an analyst and the tools that he would need to do his job. Then the optimization can be achieved where the "knowledge of the area" can be used as one of the constraints.

This method is basically a "gaming technique". The analyst will establish jointly with the planner the goals and constraints to be used and then develop a plan toward their fulfillment. The planner and analyst will then look at this plan and its resultant effects on the study area, and then to the best of their ability derive a solution by gaming several alternatives for the achievement of a solution that will serve the area and its desired goals.

The advantage of this approach is the emphasis of both the "inside" and "outside" inputs to the plan, which, ideally, should produce a more comprehensive achievement of the "desired world".

3.3.4 "Hard-Core" Mathematical Modeling

Land use forecasting by this technique is being used in many of the metropolitan areas. The models are usually developed by the agencies themselves. This is a major decision when the planning agency starts to develop its own land use model, since the personnel and computer hardware required are significant budget items.

There are many different models in use at the present time. Most, such as the one developed for the San Francisco area, are very sophisticated in scope (17). They not only account for every parcel of land in the study area, but have wide and varied assortments of algorithms for evaluating each piece of land and its future use. The actual runs are both time consuming and expensive. Models of this nature, although they do have a specific purpose, are not good general planning models.

They create tremendous requirements in data accumulations and management, since the data must be kept updated and edited. If a metropolitan area decides on a particular model, then it dictates what data are to be accumulated, which in turn limits the modeling capabilities.

There are other disadvantages to using detailed land use models. One is that these models are so expensive to run and intepret that budget allowances may restrict the number of runs that can be made by the agency. It could then become "stuck" with one or two alternatives and be forced to use one of them without being able to investigate any of the other future worlds it would like to.

Another disadvantage of this technique is that very few of the people that make the decisions can comprehend the inter-workings of these models and are required to wait for interpretations by highly skilled personnel. If they have a specific question about a land use change, they sometimes need to wait days for an answer.

What is really needed is a general mathematical model that has very short turn around (15 minutes or less), limited data requirements, and can easily be interpreted. A model that the user agencies could use to "game" alternatives and quickly evaluate the results would be an asset to them.

A model of this type is currently under investigation at the University of Oklahoma. This model uses the neighborhood as the basic land parcel. It divides the city into existing neighborhoods of different classifications. It then takes these neighborhoods and forecasts them into the future by five year increments. These neighborhoods, with their land uses, have been altered by the algorithms developed for each classification.

The population model has been programmed to file in a matrix the delta increases in population for each increment. These delta increases are partially allocated to the changes in the old neighborhoods. The remainder are divided by their socio-economical characteristics into new neighborhood requirements which have to be developed. The planner then can place these neighborhoods in several alternative arrangements. He can then determine by "gaming techniques" the "desired world".

The data that all these different modeling techniques develop can be used in this particular model. Since this portion of the model is so critical, the assorted techniques and their inherent qualities are explained below.

3.4 Land Use Validation

This area of forecasting cannot be validated except by time. The true purpose of land use forecasting is to take the goals and desired life styles and place them into a land use scheme that will produce this "desired world". It is the establishment of the world we would like to achieve. It must be obtainable under optimum conditions. The "realistic world", the one which will actually be reached by compromise, is the one that will be achieved. By minimizing the difference, we validate the plan.

The validation of a process is in a sense possible, or at least implied, by virtue of a scheme, such as the one we have presented. Several approaches, as in Section 3.3, are used, and by starting with different assumptions, we can arrive at common or "practical obtainable goals".

3.5 Data Level Theory

The land use assignments outlined in Chapter III can be summarized in terms of four levels.

I Available analysts and data which can be acquired through available literature.

II The analyst, working with professional literature, attempting to get better or more realistic values.

III Shifting the data control to that of the planner from that of the analyst.

IV Finally, using econometric models to develop data.

In this project, interstitial modeling, or gaming brings these four levels into an interactional operation.

CHAPTER IV

DEMAND MODEL

4.1 Introduction

This chapter deals with the development of the Demand Sub-Model. Taking the current and projected data that were accumulated (Chapters II and III), this model calculates the actual water demands and sewage output for the study region by selected areas and topics.

The model uses selected technical coefficients that were developed (Chapter II) or acquired from other studies (see References 18, 19, 20). These coefficients are then applied to the data files to acquire the water and sewer outputs. The model is one of the final steps toward the development of the water and sewer plan for the region. It gives not only the future requirements of the study area, but also the incremental increases these areas have. This allows the user to see the actual increase that the existing system can handle or the amount at which the system will be over capacitated if it is already at or near capacity. Applying this model, the user can gain an adequate perspective of the water and sewer network.

4.2 Model Description

The demand sub-model portion of this study is the most demanding of all the programs. Although the program is not extremely complicated, the data requirements are rather tedious. The greatest portion of the inventory and analysis chapter (Chapter II) was directed to acquiring the data and projected data for running this particular program.

This program, as in the previous sub-models, has a great deal of flexibility built into the routines. The development of programs that give the user this degree of flexibility is time consuming but extremely rewarding. The fact that a planning agency can easily explore all facets of the possible world without going through great data changes or even reprograming, and still have a comprehensive model is advantageous.

The model will not only give the water and sewage requirements for any particular study year, but, by using the sub-model DELTA, a new data file can be created that will give an incremental change in the requirements from one study period to another. This, coupled with good editing sub-routines, gives the agency the capability of looking at any size or particular area by study years and/or incremental changes.

4.2.1 Model Concept

The demand sub-model is an application of technical coefficients to derive the water and sewage requirements and the accounting of these requirements to the different study areas for output. This is an over simplification, of course, but it is the basic concept behind the model.

The data is supplied to the model for each statistical analysis unit (SAU). These SAU's were selected as one square mile areas. This is made possible by the methods of surveying used in this state, but the model does not require that these areas be one square mile. Any system can be used that will require six numerical digits and account for all the areas in the study region. The SAU's need to be kept in the size that approximates a square mile, but not more than two or three square miles. The SAU's can be as small as needed for the type of detail wanted.

The rural areas can be larger, but if development is a possibility

within the time frame of the study, they should be reduced to the size that they will be after development. The time spent by a planning agency coding the SAU's in their study area will be worthwhile, if it is compatible with all other boundary areas used in this program (i.e. political jurisdiction, watershed, etc.). It is suggested that a map be used that has the other boundaries on it (including census tracts, although they have a bad habit of not being conducive to any other study but their own) and SAU's be made using these boundaries as much as possible. This will allow better analysis of the output results.

The coding of the other areas is accomplished much in the same fashion. The other areas are as follows:

1. Political jurisdistion
2. Watershed
3. Water treatment plant
4. Storage system
5. Waste treatment plant
6. Receiving stream
7. Water source

It is suggested that all areas except watershed and receiving stream be coded numerically in sequence. In other words, start with one and numerically allocate each succeeding number of each area till they are all accounted for. Each new plant or jurisdiction will be assigned the next number in its area. These numbers of the area members are needed to set the "Do Loops" within the model. This will also prevent the program from handling large matrices that have many zeros in their structure.

The coding of the streams and watersheds can best be accomplished by

using the following scheme:

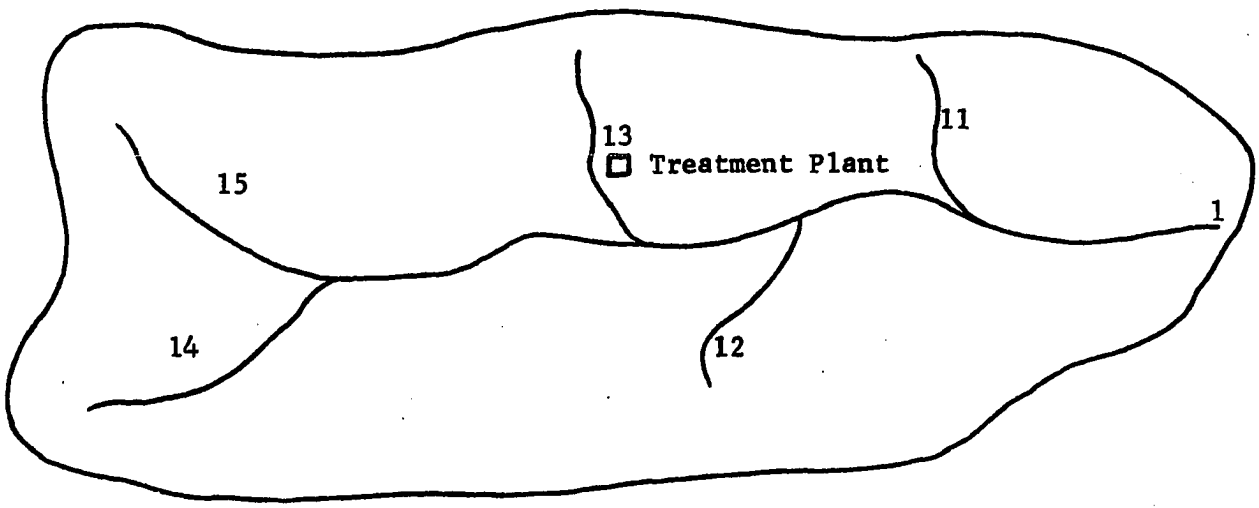

Figure 4-1. The Coding of Streams and Watersheds

This would be watershed 1 and the plant is on receiving stream 13.

The demand sub-model also has the capability of looking at several special areas made up of selected SAU's independently or with the general study. This allows the user to game several alternatives at one time to see which special area is more suited for certain goals or objectives.

The sub-model also has the capability of handling special users of water. These are the users that fit in one of the 29 assignment areas (such as SIC 24), but does not have water usage that fits the linear equation for computing it. These areas can be handled individually and this will relieve the model of complicated functions for water usage or sewage return flow.

These are the basic sub-model concepts and their general application. The use of this model will greatly reduce the process of computing water

and sewage demands for large metropolitan areas. It also allows the user a large degree of freedom for exploring the alternatives for the future worlds.

4.2.2 Model Methodology

The demand sub-model is run for each time increment wanted by the study. For each run a data file of all the information described in Section 4.5 is needed. These data files are duplicated as far as the area codings are concerned. The base year (1970 for this study) contains the inventory data collected in Chapter II.

The data files for the future years are developed from the projected data. These files have to be built using the same areas that existed in the previous files, but can have new SAU's in addition to the old ones.

The model with all of its subroutines is shown in Tables 4-1 through 4-5. The model can easily be followed by using these diagrams and the program listings in Section 4.5.2. The outputs are by the following categories:

A. Water requirements by:
   1. Political jurisdiction
   2. Source of supply
   3. Water treatment plant
   4. Water storage system
   5. Special area

B. Sewage loads by:
   1. Political jurisdiction
   2. Watershed
   3. Sewage treatment plant
   4. Receiving stream
   5. Special area

With each category broken down by:

1. Domestic
2. Institutional (including hospitals, schools and military bases)
3. Commercial
4. Industrial by SIC code and special user irrigation

The outputs from the above categories can be selected by using Card 6 of the input data.

Table 4-1 MAIN (DEMAND)

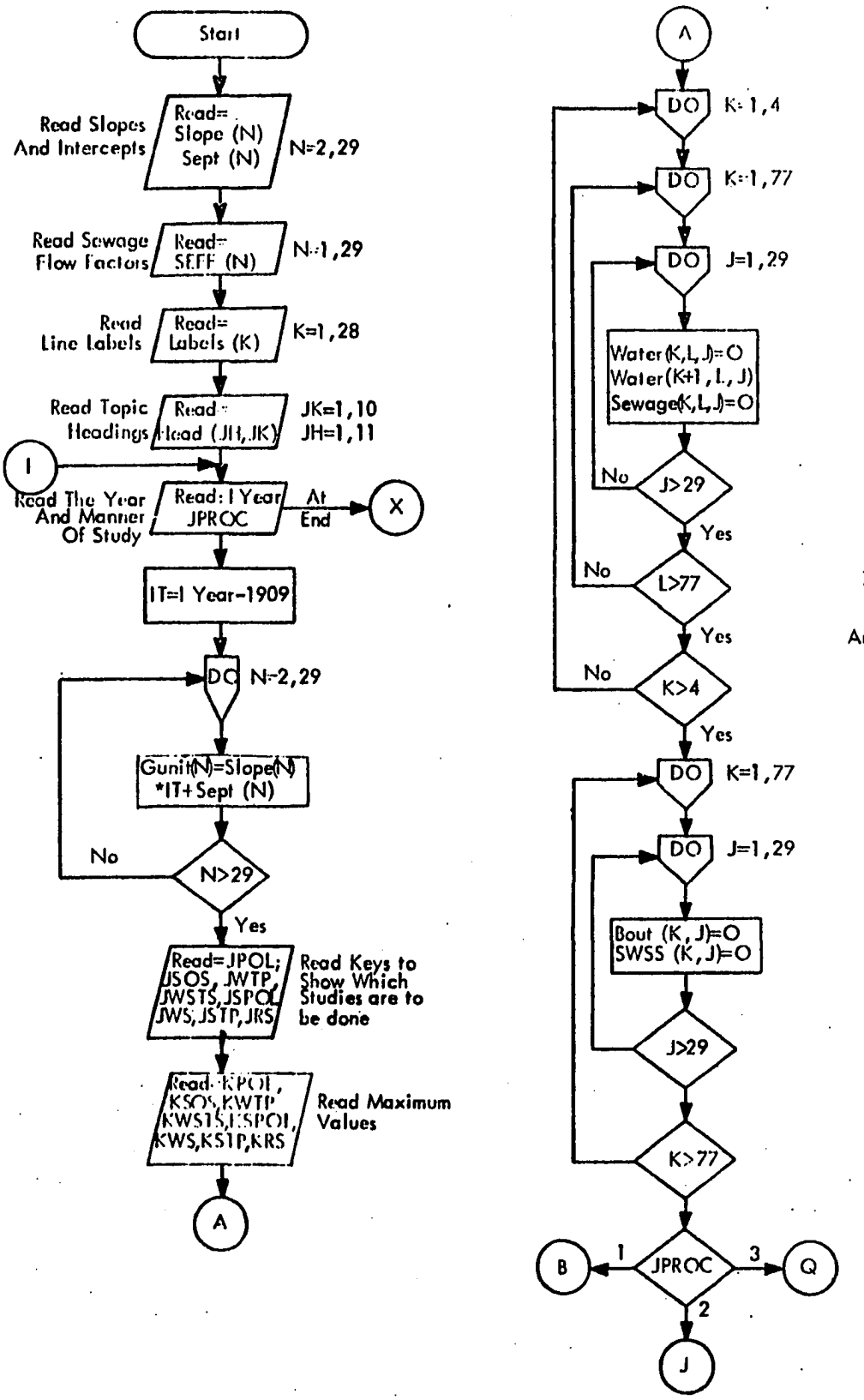

TABLE 4-1 MAIN (DEMAND) Cont.

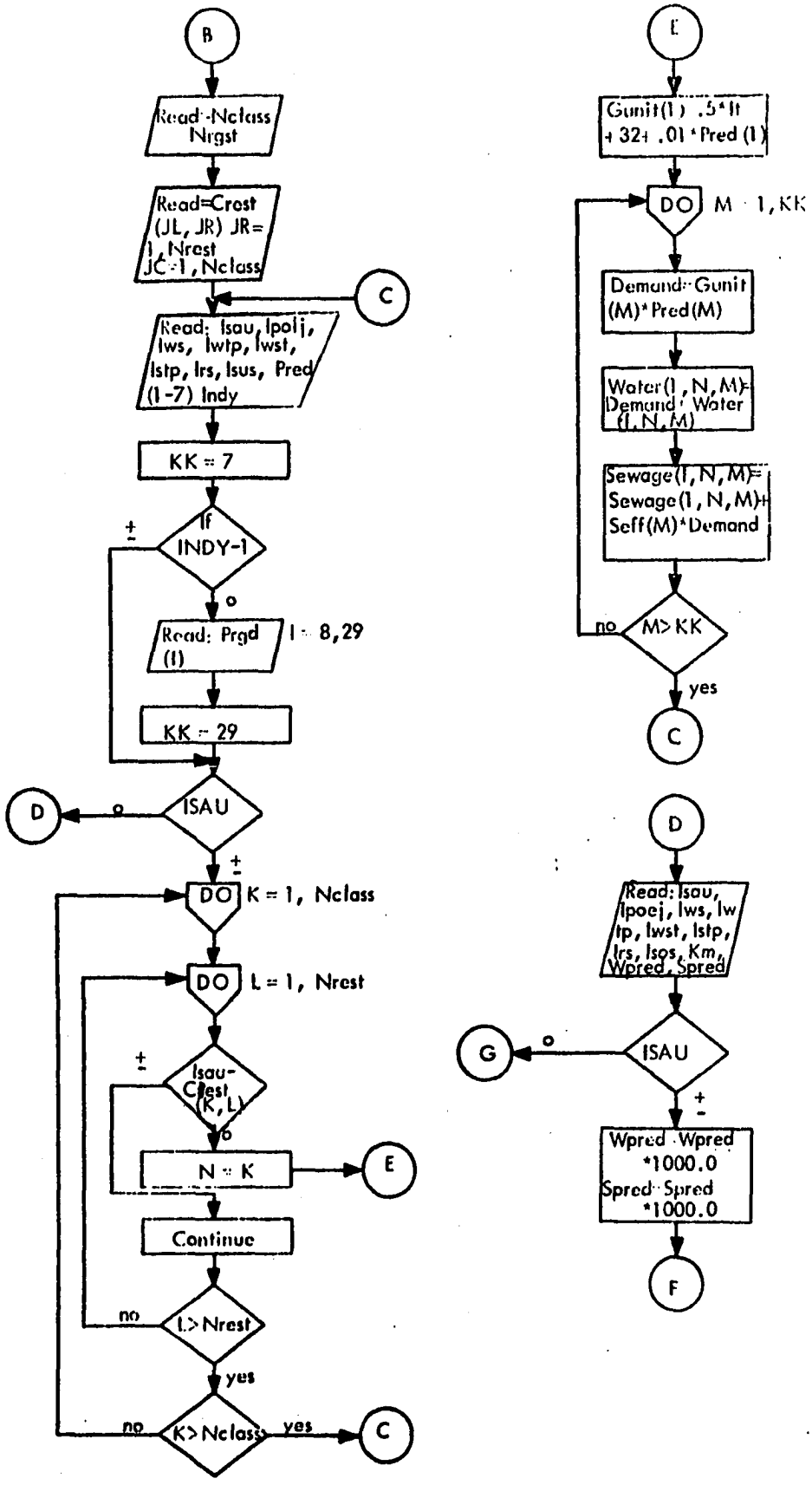

TABLE 4-1 MAIN (DEMAND) Cont.

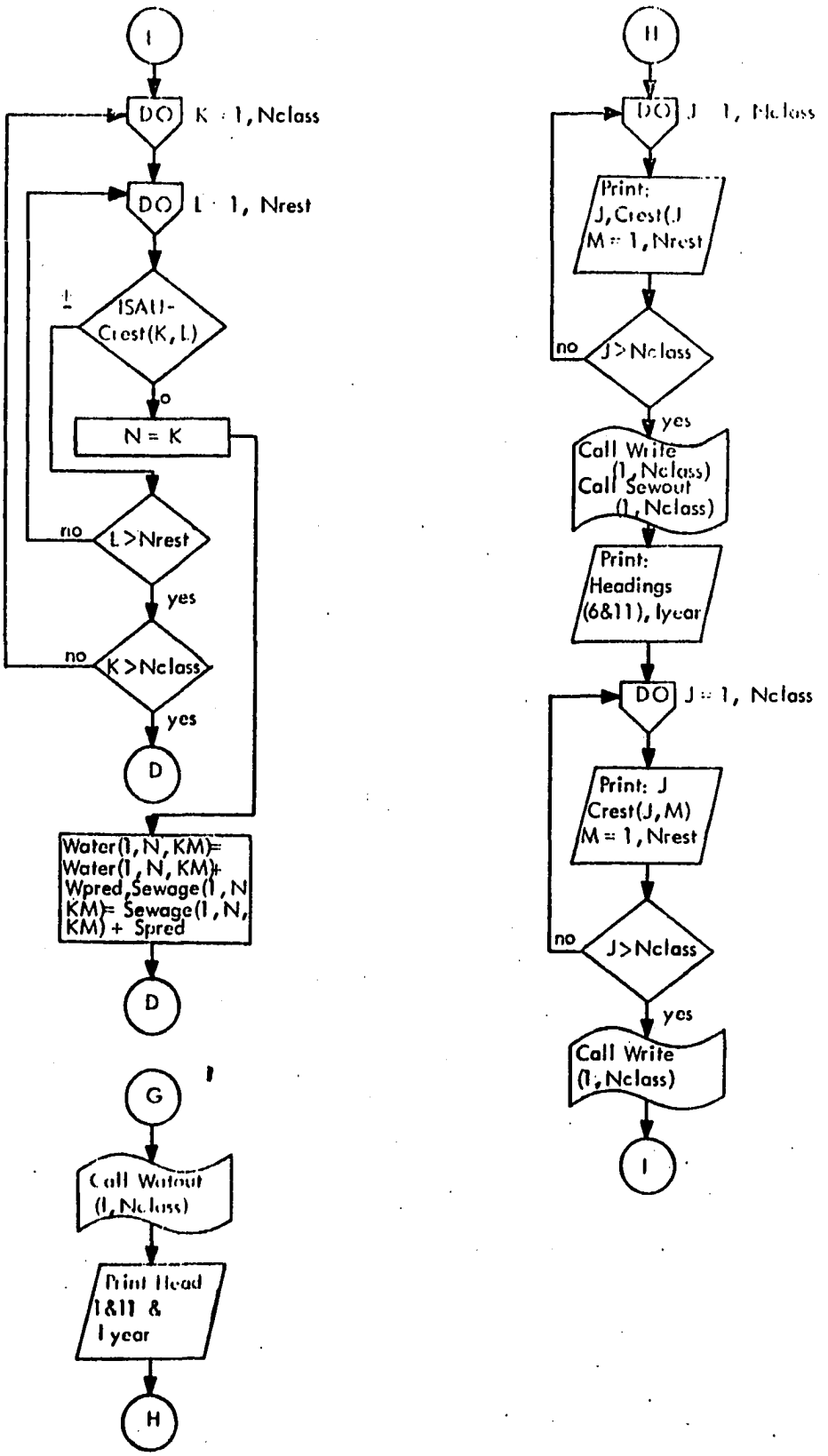

TABLE 4-1 MAIN (DEMAND) Cont.

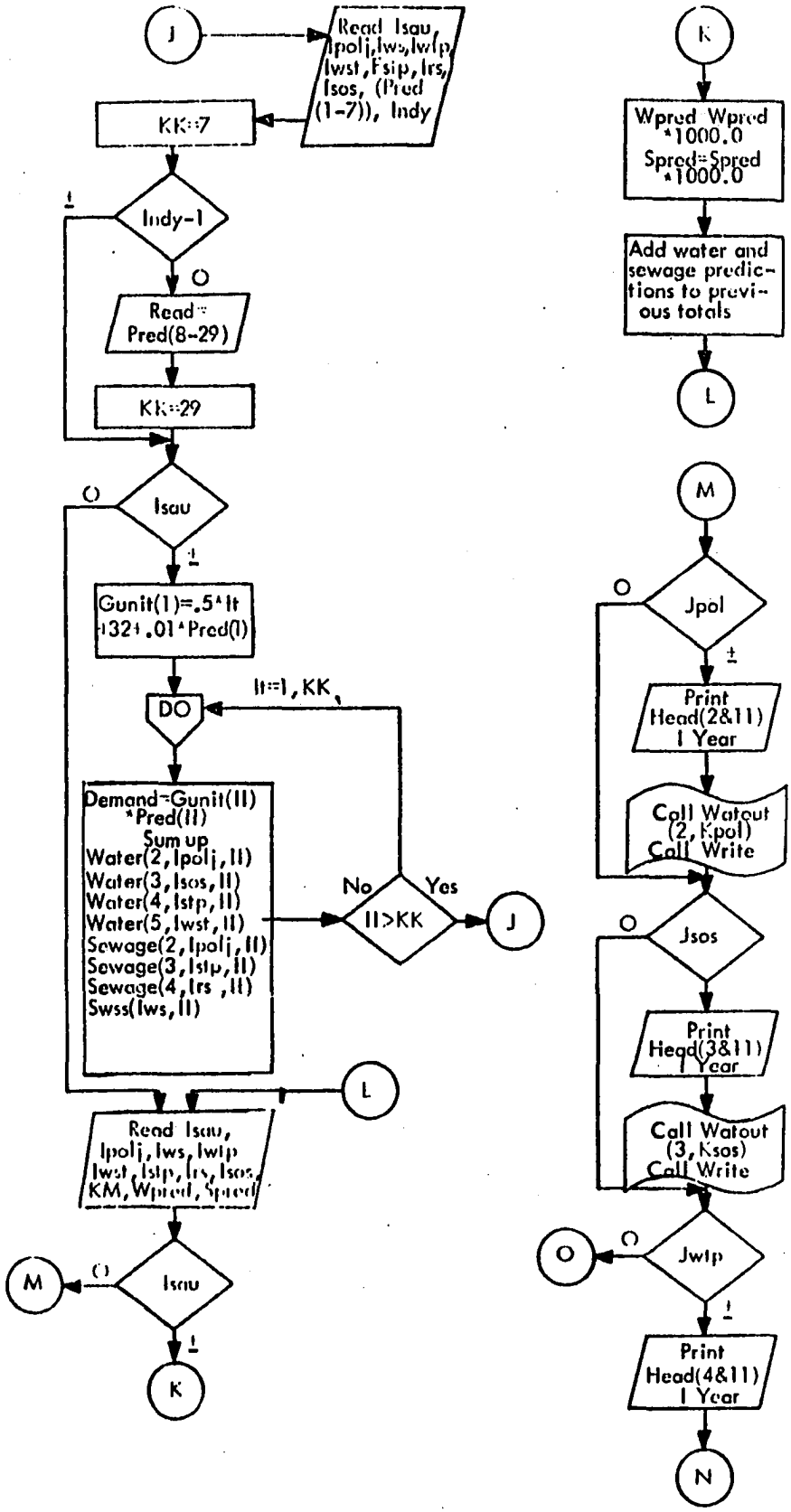

TABLE 4-1 MAIN (DEMAND) Cont.

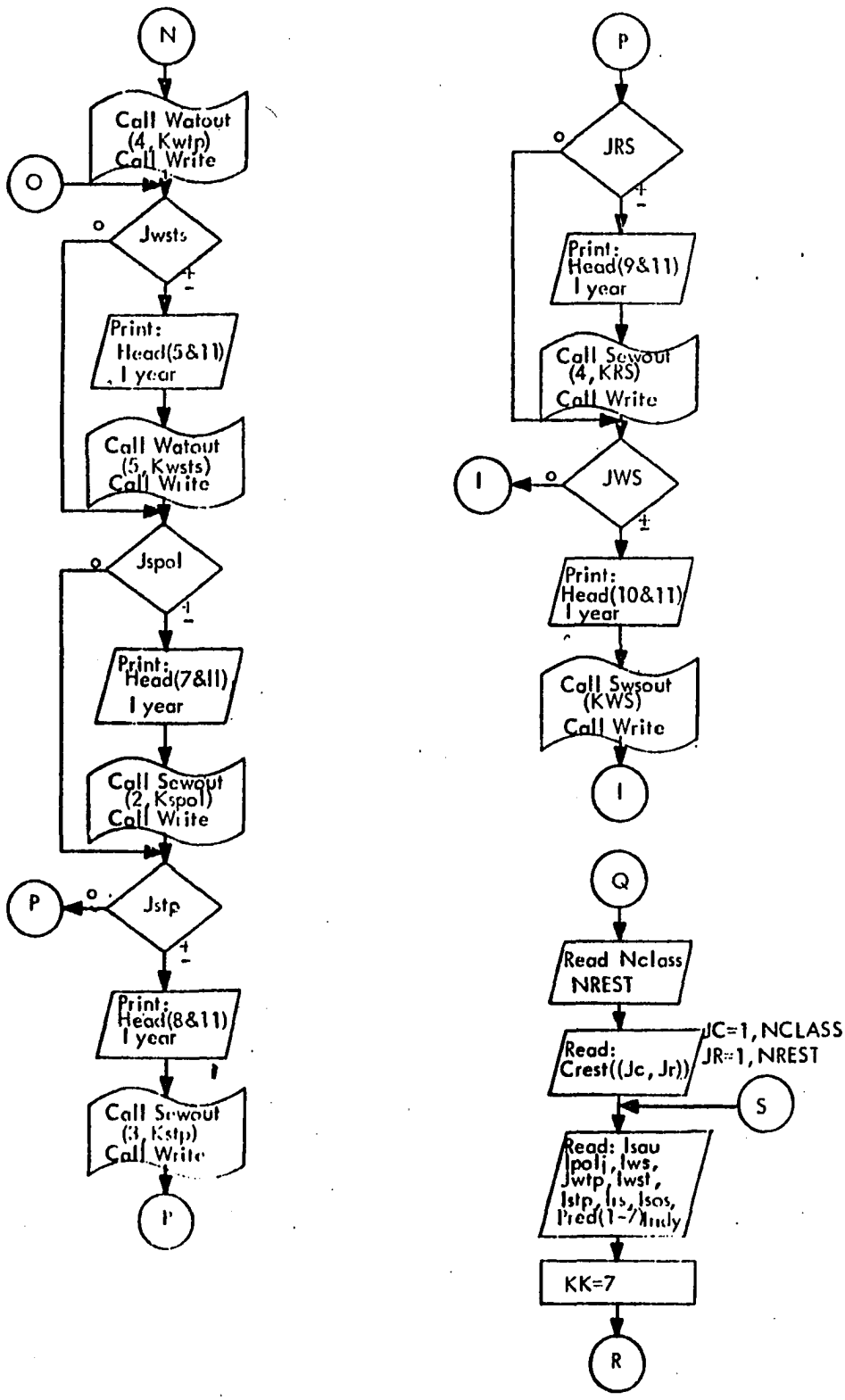

TABLE 4-1 MAIN (DEMAND) Cont.

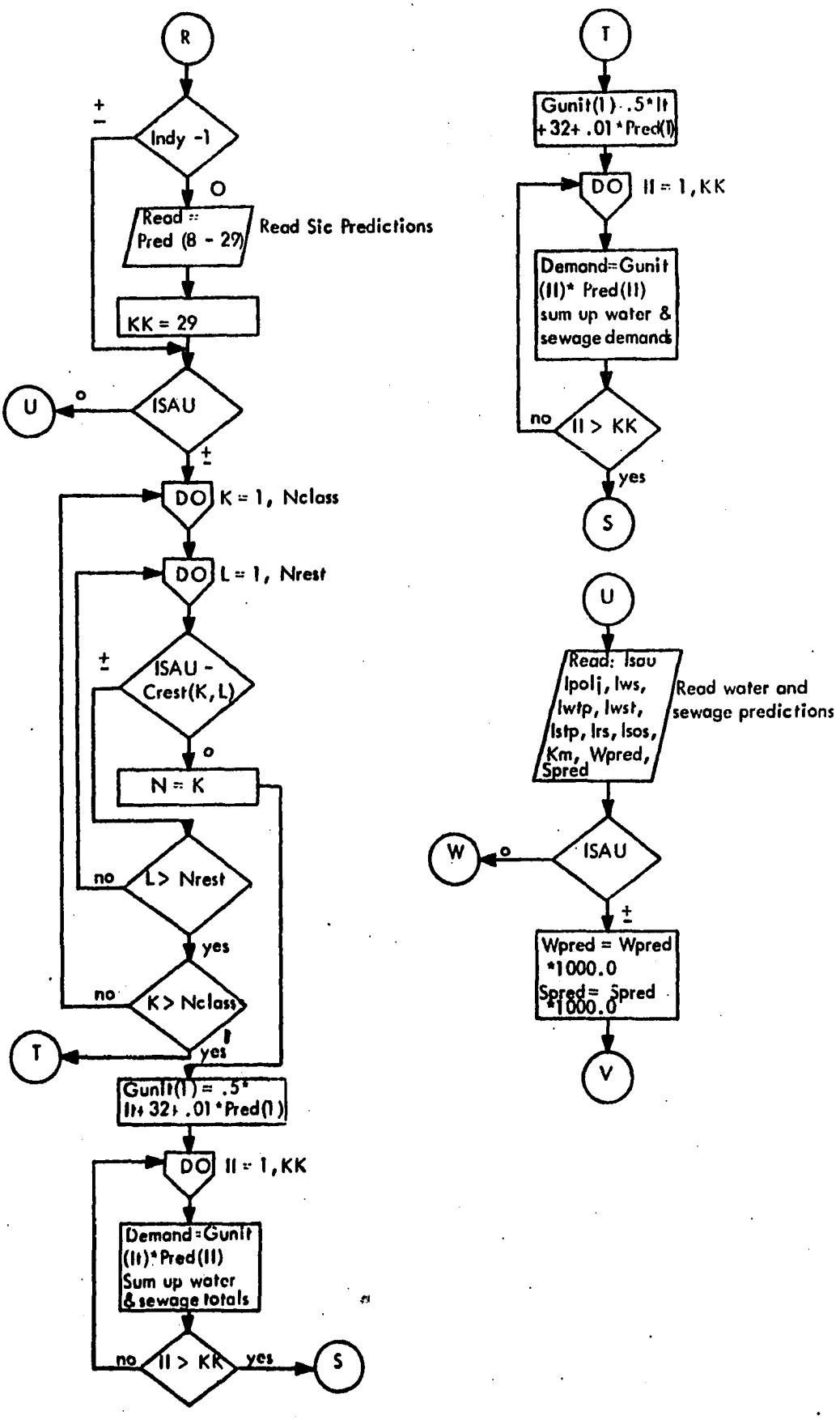

TABLE 4-1 MAIN (DEMAND) Cont.

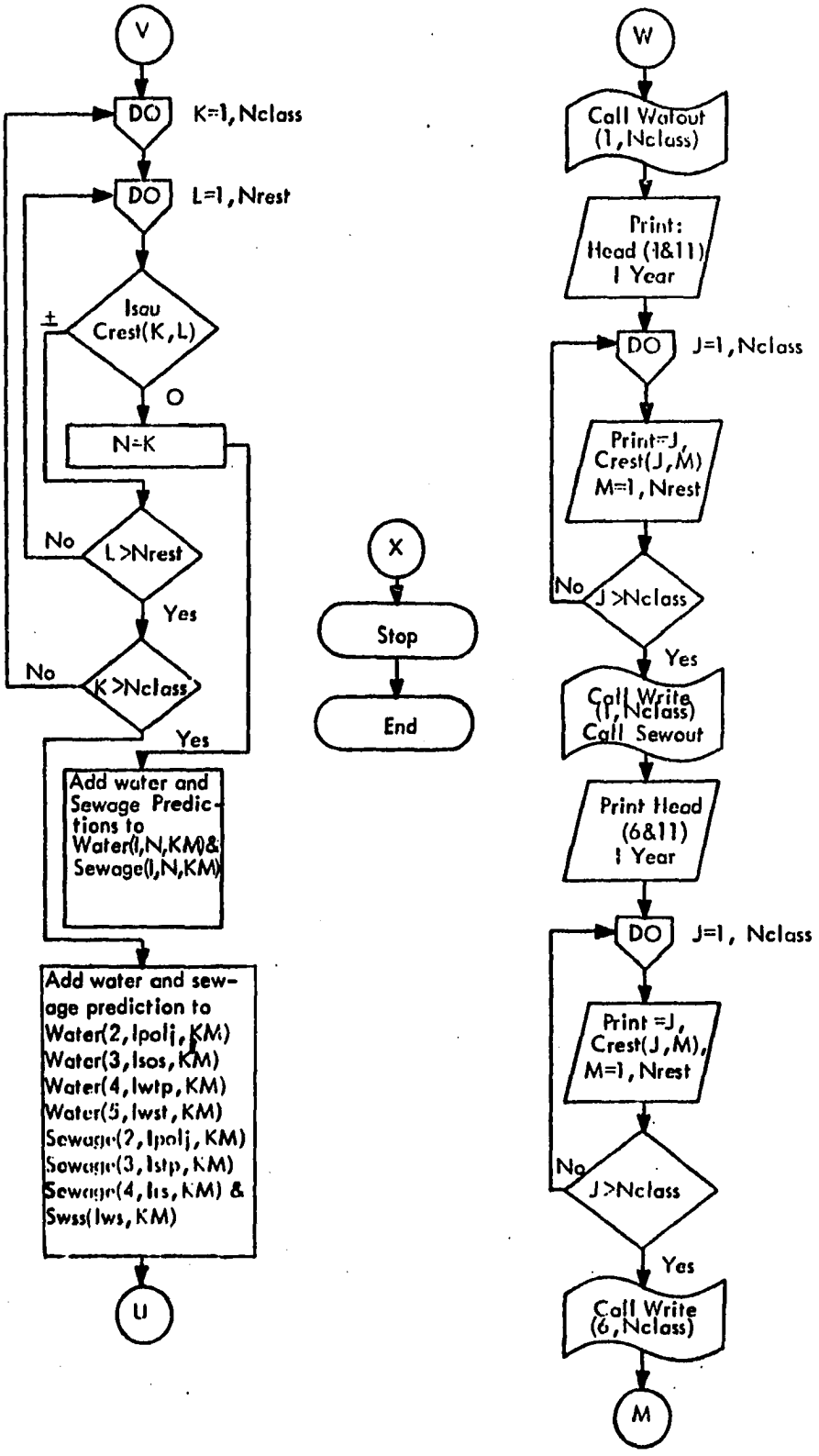

TABLE 4-2. SUBROUTINE WATOUT (KTYP, KKK)

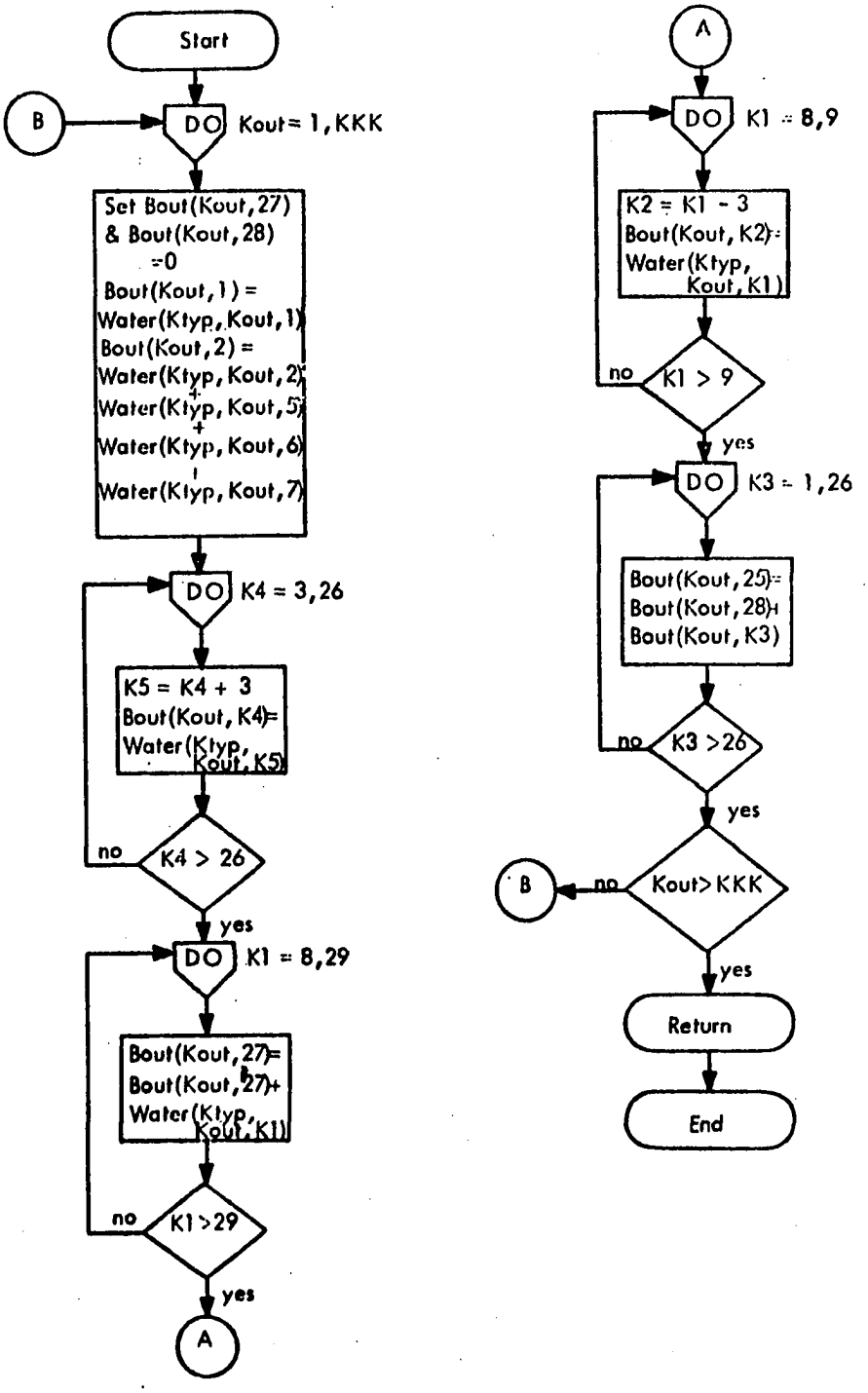

TABLE 4-3. SUBROUTINE WRITE (KH, KL)

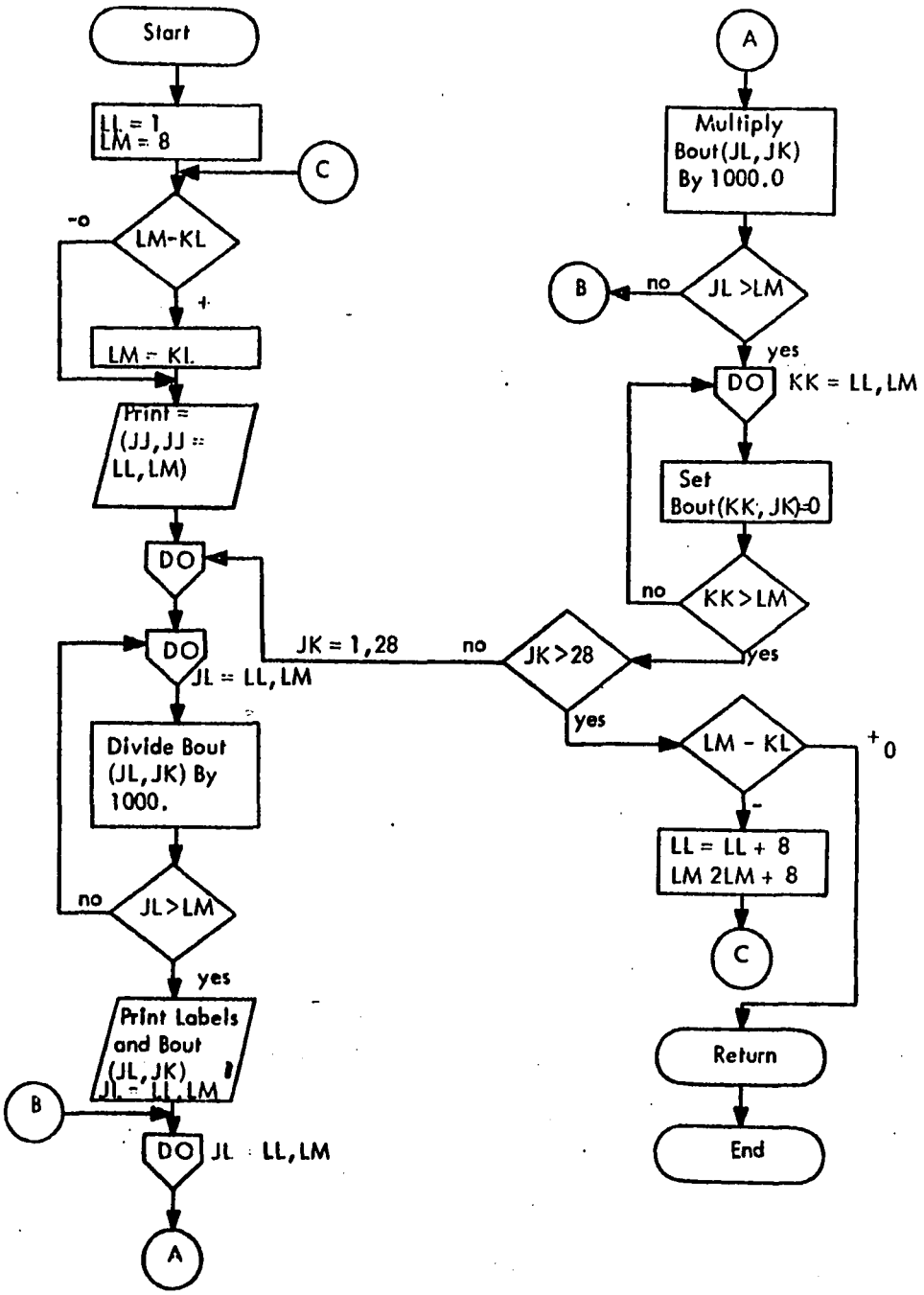

TABLE 4-4. SUBROUTINE (KTYP, KKK)

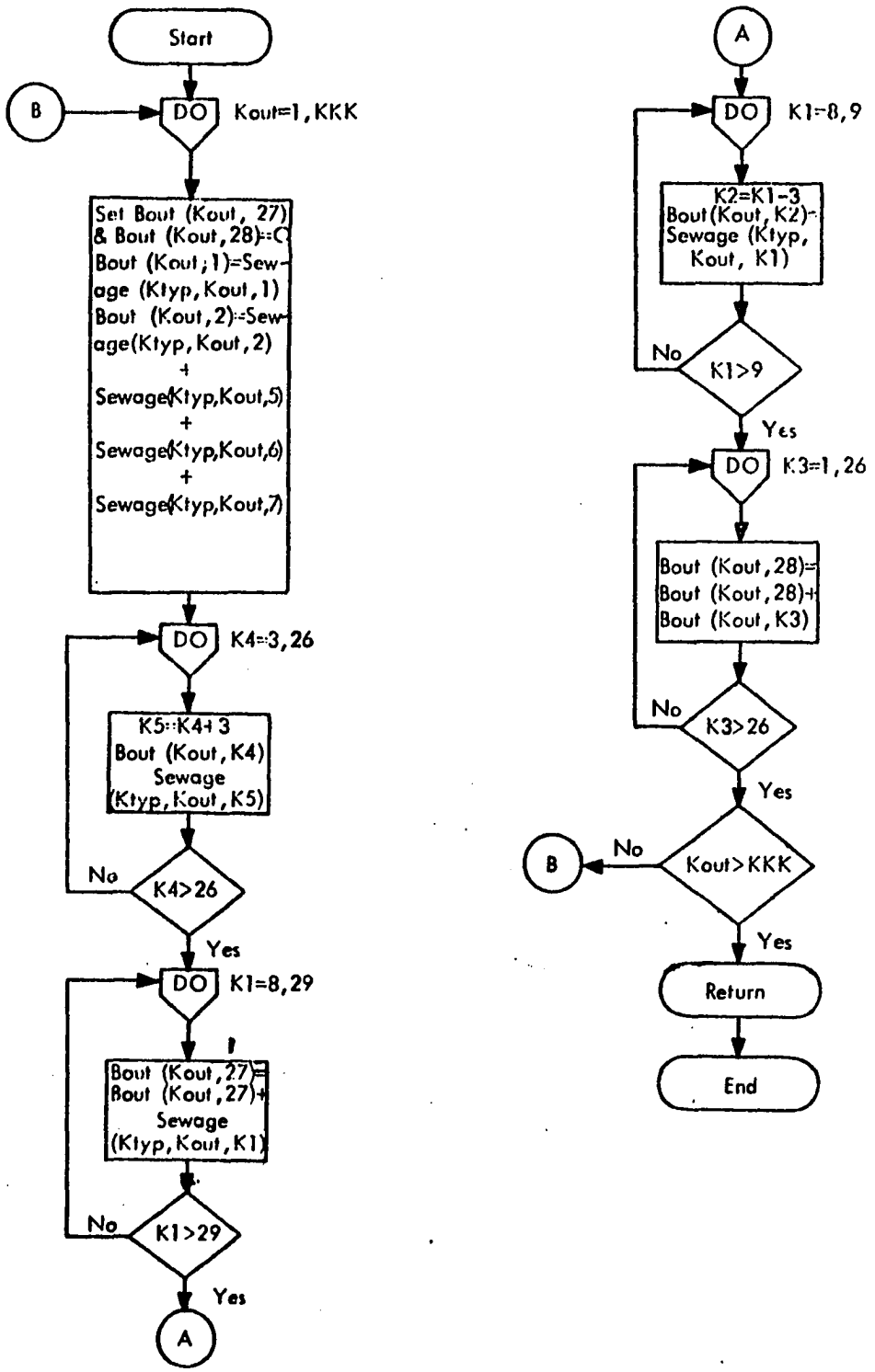

TABLE 4-5. SUBROUTINE SWSOUT (KKK)

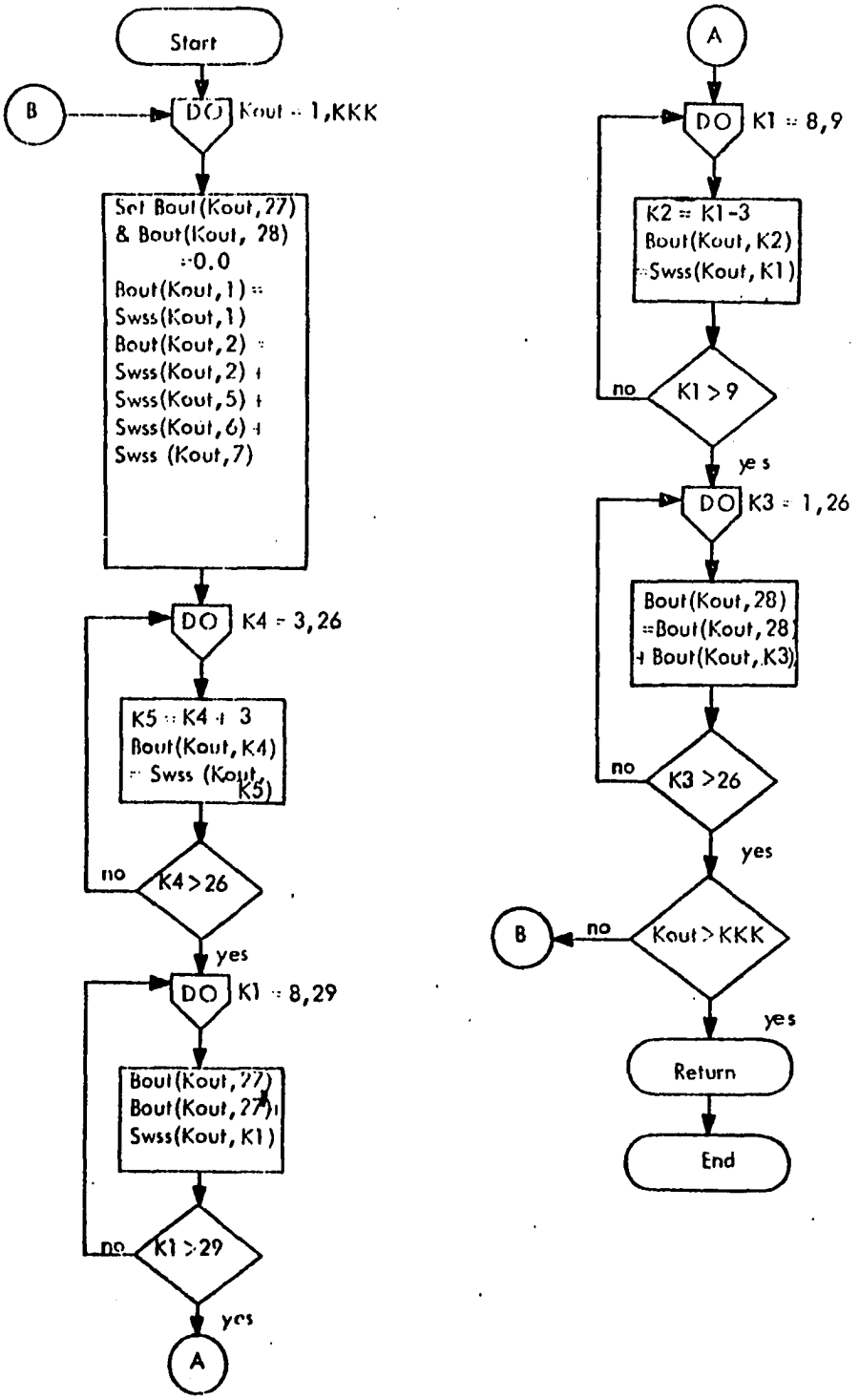

4.3 Data Requirements

The demand model is written in Fortran IV for the General Electric Time-Sharing System. The data from this system were stored in files; therefore, the program would have to have minor alteration for other systems.

The data requirements for this system are quite extensive and require good data management to keep it in proper order. The data used in this model was not the correct data from the ACOG area. Specific data about industries by the SIC's code were not available without extensive survey work which was not funded and could not be accomplished in the framework of this study. Some industrial data were added for verification of the model and its sub-routines.

The source and development of the data for this model are explained in Section 4.3.1 of this chapter.

4.3.1 Input

All of the following cards must be presented in the order shown. This data is shown in the listing of the data file in Section 4.4. The sources and formats of the various cards are described as follows:

Card 1, WATER SLOPE-INTERCEPT CARDS

There are 28 of these cards, one for each category of user, except "domestic", which is built into the program. The categories and factors used are listed at the end of this sub-section. The sequence of input by the categories must be maintained throughout the input. Therefore, it starts with institutional and ends with SIC 10-17, 40-50.

Col. 1 - 6 Slope

Col. 7 - 8 Blank

Col. 9 - 14 Intercept

Right justified in field or include decimal point. This input feeds a linear equation of the form

$$y = a \cdot t + b$$

where "b" is the intercept in gallons per unit of input (acre, employee, hospital bed, etc.), and "a" is the slope in gallons per year. The slope provides a rate of change in water use for future years and "t" is the years into the future from the base year (t=0). Source was the Bartone State Water Model (23).

Card 2, SEWAGE FLOW FACTORS

There are 29 of these cards, one for each category in proper sequence. This is the percent of water used by each category that is returned as sewage. It is expressed as the decimal equivalent (99% = 0.99). Source was same as Card 1.

Col. 1 - 6 Flow (decimal)

Card 3, LABELS

These are the labels for each row of output for each specific study. It is in the same sequence order as the previous cards with a few exceptions. The labels are as follows:

1. Domestic
2. Institutional (including sequence order 2,5,6,7)
3. Commercial
4. Irrigated land
5. SIC 19

26. SIC 39
27. Total all SIC's
28. Total all users

There are a total of 28 cards with the labels centered in columns 1-16.

Card 4, HEADINGS

There are eleven headings, one card each, centered in columns 1-40. The headings are the titles for each type of output. The headings are as follows:

1. Water by SAU
2. Water by political jurisdiction
3. Water by source of supply
4. Water by water treatment plant
5. Water by storage system
6. Sewage by SAU
7. Sewage by political jurisdiction
8. Sewage by treatment plant
9. Sewage by receiving stream
10. Sewage by watershed
11. Thousand of gallons per day

Card eleven is the way the model is geared for output.

Card 5, YEAR AND TYPE OF STUDY

Col. 1 - 4 Year of study

Col. 5 Blank

Col. 6 Type, where type is: "1" for special areas only
"2" for general study
"3" for both studies

Col. 7 Blank

Col. 8 - 11 Year of earlier study if the data file is a "difference" or incremental file. That is, as shown in Section 4.6 (1990-1970), these columns are left blank if only a one year study is being run.

Card 6, OUTPUT CONTROL CARD

This card controls the output by the labels as given in Card 4. By placing a "1" in the proper output column, the program will print this output for that label. A "0" in that column deletes that output. The data is right justified.

SAMPLE LISTING

Sequence No	Category	Water Use	Sewage Factor *
1	Domestic	(32 + .01 pop) + 1/2 gal/yr	.70
2	Institutional (general)	1000 gal/acre/day	.70
3	Commercial	1680 gal/acre/day	.70
4	Irrigated land	870 gal/acre/day	.00
5	College	95 gal/student/day + 1 gal/yr	.70
6	Hospital	192 gal/bed/day + 1/2 gal/yr	.70
7	Military	151 gal/cap/day + 1/2 gal/yr	.70
8	SIC 19	204 gal/employee/day	.94
9	SIC 20	1400 g/e/d	.91
10	SIC 21	168 g/e/d	.67
11	SIC 22	644 g/e/d	.91
12	SIC 23	60 g/e/d	.94
13	SIC 24	904 g/e/d	.82
14	SIC 25	79 g/e/d	.94
15	SIC 26	9762 g/e/d	.94
16	SIC 27	260 g/e/d	.94
17	SIC 28	14584 g/e/d	.94
18	SIC 29	25157 g/e/d	.94
19	SIC 30	1130 g/e/d	.95
20	SIC 31	215 g/e/d	.94
21	SIC 32	1434 g/e/d	.88
22	SIC 33	11196 g/e/d	.94
23	SIC 34	249 g/e/d	.93
24	SIC 35	421 g/e/d	.95
25	SIC 36	264 g/e/d	.87
26	SIC 37	551 g/e/d	.95

SAMPLE LISTING (Continued)

Sequence No	Category	Water Use	Sewage Factor
27	SIC 38	363 g/e/d	.90
28	SIC 39	175 g/e/d	.93
29	SIC 10-17,40-50	60 g/e/d	.94

* These sewage factors will not be constant. The new EPA standards will probably cause a reduction in these factors. A program can be developed to predict these factors over time.

Col. 1 - 2 for the water by political jurisdiction output

Col. 3 - 4 for the water by source of supply output

Col. 5 - 6 for the water by water treatment plant output

Col. 7 - 8 for the water by water storage system output

Col. 9 -10 for the sewage by political jurisdiction output

Col. 11-12 for the sewage by watershed output

Col. 13-14 for the sewage by sewage treatment plant output

Col. 15-16 for the sewage by receiving stream output

Card 7, AREA SIZE CONTROL CARD

This card has the same format as Card 6 and is the maximum number of areas entered for each output as listed in Card 6 (for example, if one had 12 water treatment plants, coded 01 through 12, he would enter 12 in columns 5 and 6). The maximum areas for any output are limited to 77.

Card 8, SPECIAL AREA CONTROL CARD

This card is used only if a "1" or "3" is placed in column 6 of Card 5. When special areas are to be used, the card is filled out.

Col. 1 - 3 Number of special areas to be run.

Col. 4 - 5 The maximum number of SAU's that is in any of the special areas. This controls the "Do" loops and the highest number of SAU's that is any one special area is used.

Card 9, SAU'S IN SPECIAL AREAS

This card is used only when Card 8 is present. The cards are stacked in the order of the special areas.

Col. 1 - 6 SAU: The SAU's for the first special area are stacked, one SAU to a card, until all SAU's for that special area are entered. Then the deck is padded with blank cards till the total number of cards is equal to the maximum number entered in column 4-5 of Card 8. Then the SAU's for the next special area are added and padded until all special areas are loaded.

Card 10, DATA OR PREDICTION CARDS FOR EACH SAU

This series of cards is the actual data that were derived from Chapter IV of this study. There can be up to three cards for each SAU, depending on the presence of industry within the SAU. If there is no industry, then there will be only one card per SAU.

Card "A". This card will exist for each SAU.

Col. 1 - 6	SAU
7	Blank
8 - 9	Political jurisdiction code
10-12	Watershed code
13-18	Blank
19-20	Water treatment plant code
21-22	Storage system plant code
23-24	Waste treatment plant code
25-26	Receiving stream code
27-28	Water source code
29-34	Blank
35-39	Population in SAU
40-44	Institutional land use in acres (general)
45-49	Commercial land use in acres
50-54	Blank
55-59	Irrigated land in acres
60-64	College in number of students
65-69	Hospital in number of beds
70-74	Military in number of persons
75-76	Blank
77	Code "0" if no industry in SIC's, "1" if using SIC's

Card "B". The number of employees are entered in the column for that SIC that exist in this SAU.

Col. 1 - 5	SIC 19
6 -10	SIC 20
11-15	SIC 21

16-20 SIC 22
21-25 SIC 23
26-30 SIC 24
31-35 SIC 25
36-40 SIC 26
41-45 SIC 27
46-50 SIC 28
51-55 SIC 29
56-60 SIC 30
61-65 SIC 31
66-70 SIC 32
71-75 SIC 33
76-80 SIC 34

Card "C". This card is for the remaining SIC's and is always present when Card "B" is used.

Col. 1 - 5 SIC 35
6 -10 SIC 36
11-15 SIC 37
16-20 SIC 38
21-25 SIC 39
25-30 SIC 10-17 and 40-50

All data is right-hand justified.

Card 11, GENERAL STUDY TERMINATION CARD

This card is used after all the SAU's have been entered for the general study.

Col. 6 "0"

Card 12, SPECIAL USER CARDS

These cards are added if there exists special water users that do not fit the generalized equations used in the rest of the model. These users have to be specially assigned and are usually the larger industrial complexes.

Col. 1 - 6 SAU
7 Blank
8 - 9 Political jurisdiction code
10-12 Watershed code
13-18 Blank
19-20 Water treatment plant code

21-22 Storage system plant code
23-24 Waste treatment plant code
25-26 Receiving stream code
27-28 Water source code
29 Blank
30-31 Type of assignment code (1 through 29)
32-36 Water prediction (gallons per day)
37-41 Sewage prediction (gallons per day)

Card 13, TERMINATION CARD

This card ends program.

Col. 6 "0"

4.4 Data Arrangement

The proper card order is shown in Figure 4-2, "Demand Data Deck Set-Up", on the following page. This card order is for the "general study" and matches the listing of data in Section 4.5.1

4.5 Model Format

The format for the 1970 portion of the validation run is presented in this section. The data format is illustrated in Section 4.4 of this chapter. The actual run is made using 1970 data and 1990 data. Then by deleting all data from the file for the future data above Card 10 and using program DELTA and a data file for a selected base year, a data file for the incremental change in water and sewage is created. This file can then be run with the demand model and the output is the incremental change between the two time periods. An example of the incremental change output is shown in Section 4.6 for the time period 1970-1990.

This added capability will greatly increase the users gaming options to determine how changes increase the actual demands on systems above their

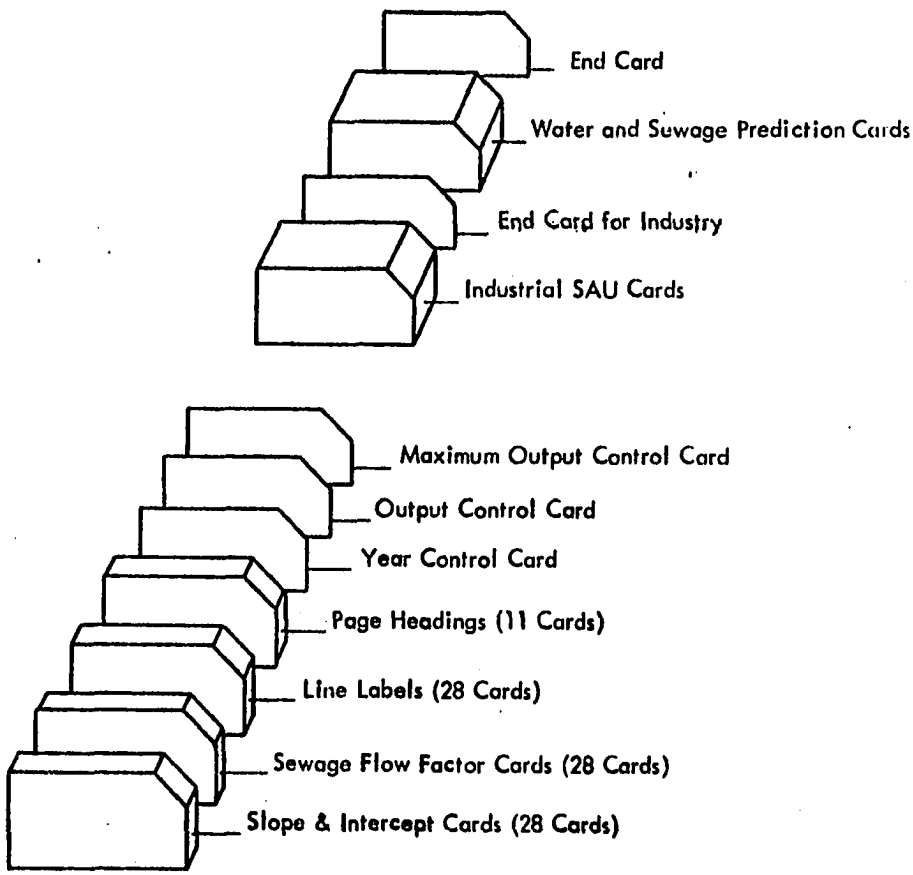

Figure 4-2. Demand Data Deck Set-Up

present operation. The use of equipment with good editing capabilities is mandatory if good use of alternative runs is to be made. This capability gives the user full gaming capabilities of looking at all future alternatives for all areas.

4.5.1 Input Data

The data listed on the following pages are for the 1970 run of the demand model and are listed in the sequence as described in Section 4.4.

0.	1000.	0.9400	
0.	1680.	0.9400	
0.	870.	0.9400	
1.0	95.	0.9400	
0.5	192.	0.9500	
0.5	151.	0.9400	
0.	204.	0.8400	
0.	1400.	0.9400	
0.	168.	0.9300	
0.	644.	0.9500	
0.	60.	0.8700	
0.	904.	0.9500	
0.	79.	0.9000	
0.	9762.	0.9300	
0.	260.	0.9400	
0.	14584.	DOMESTIC	
0.	25157.	INSTITUTIONAL	
0.	1130.	COMMERCIAL	
0.	215.	IRRIGATED LAND	
0.	1434.	SIC 19	
0.	11196.	SIC 20	
0.	249.	SIC 21	
0.	421.	SIC 22	
0.	264.	SIC 23	
0.	551.	SIC 24	
0.	363.	SIC 25	
0.	175.	SIC 26	
0.	60.	SIC 27	
0.7000		SIC 28	
0.7000		SIC 29	
0.7000		SIC 30	
0.0000		SIC 31	
0.7000		SIC 32	
0.7000		SIC 33	
0.7000		SIC 34	
0.9400		SIC 35	
0.9100		SIC 36	
0.6700		SIC 37	
0.9100		SIC 38	
0.9400		SIC 39	
0.8200		SIC OTHER	
0.9400		TOTAL ALL SICS	
		TOTAL ALL USER	

WATER BY SAU
WATER BY POLITICAL JURISDICTOION
WATER BY SOURCE OF SUPPLY
WATER BY WATER TREATMENT PLANT
WATER BY WATER STORAGE SYSTEM
SEWAGE BY SAU
SEWAGE BY POLITICAL JURISDICTION
SEWAGE BY SEWAGE TREATMENT PLANT
SEWAGE BY RECEIVING STREAM
SEWAGE BY WATERSHED
THOUSANDS OF GALLONS PER DAY

```
1970 2
 1 1 1 1 1 1 1 1
3630 8 536304013
062250  2  1        1 1 1 1 1          1.   0.   1.         0.   0.  54.   0.  1
  22.  22.  22.  22.  22.  22.  22.  22.  22.  22.  22. 222.  22.  22.  22.  22.
  22.  22.  22.  22.  22. 662.
072350  1  1        1 1 1 1 1          1.   0.   1.         0. 494.   0.   0.  0
072820  1  1        1 1 1 1 1          1.   0.   1.         0.   0.  31.   0.  1
  15.  15.  15.  15.  15.  15.  15.  15.  15.  15.  15.  15.  15.  15.  15.  15.
  15.  15.  15.  15.  15. 315.
112210 20 20        6 1 9 220          20.   0.   1.         0.   0.   0.   0.  0
112220 20 20        6 1 9 220          20.   0.   1.         0.   0.   0.   0.  0
112230 20 20        6 1 9 220          20.   0.  10.         0.   0.   0.   0.  0
112240 20 20        6 1 9 220          10.   0.   1.         0.   0.   0.   0.  0
112250 20 20        6 1 9 220          10.   0.   1.         0.   0.   0.   0.  0
112260 20 20        6 1 9 220          10.   0.  10.         0.   0.   0.   0.  0
112110 20 20        6 1 9 220           1.   0.   7.         0.   0.   0.   0.  0
112120 20 20        6 1 9 220        5049.   0.  20.         0.   0.   0.   0.  1
  15.  15.  15.  15.  61.  32.  15.  15.  15.  15.  15.  15.  15.  15.  15.  15.
  15.  15.  15.  15.  15. 378.
112130 20 20        6 1 9 220        1000.   0.  25.         0.   0.   0.   0.  0
112140 20 20        6 1 9 220          30.   0.   1.         0.   0.   0.   0.  1
  21.  21.  21.  21.  21. 180.  21.  21.  21.  21.  21.  21.  21.  21.  21.  21.
  21.  21.  21.  21.  21. 579.
112150 20 20        6 1 9 220        1000.   0.   8.         0.   0.   0.   0.  1
   8.   8.   8.   8.  34.  71.   8.   8.   8.   8.   8.   8.   8.   8.   8.   8.
   8.   8.   8.   8.   8. 257.
```

```
112160 20 20       6 1 9 220        50.   0.   3.        0.   0.   0.   0.   0
112010 20 20       6 1 9 220        16.   0.   1.        0.   0.   0.   0.   0
112020 20 20       6 1 9 220        13.   0.   1.        0.   0.   0.   0.   0
112030 20 20       6 1 9 220         4.   0.   1.        0.   0.   0.   0.   0
112040 25 20       7 1 1 225         2.   0.   1.        0.   0.   0.   0.   0
112050 20 20       7 1 9 220      1000.   0.   1.        0.   0.   0.   0.   0
112060 25 20       7 1 9 225         1.   0.   1.        0.   0.   0.   0.   0
111710 30 10       1 110 230       240.   0.   1.        0.   0.   0.   0.   0
111720 30 20       1 110 230        32.   0.   1.        0.   0.   0.   0.   1
  21.  21.  21.  21.  21. 180.  21.  21.  21.  21.  21.  21.  21.  21.  21.  21.
  21.  21.  21.  21.  21. 579.
111730 30 20       1 110 230       645.   0.   1.        0.   0.   0.   0.   0
111740 30 10       1 110 130        54.   0.   1.        0.   0.   0.   0.   0
111750 30 10       1 110 130        10.   0.   1.        0.   0.   0.   0.   0
111760 30 10       1 110 130        13.   0.   1.        0.   0.   0.   0.   0
122410 25 30       4 131 725       170.   0.   1.        0.   0.   0.   0.   0
122420 25 30       4 131 725       113.   0.   2.        0.   0.   0.   0.   0
122430 25 30       4 131 725         5.   0.   1.        0.   0.   0.   0.   0
122440 25 30       4 131 725         5.   0.   3.        0.   0.   0.   0.   0
122450 25 30       4 111 725        14.   0.   3.        0.   0.   0.   0.   0
122460 25 30       4 131 725        24.   0.   1.        0.   0.   0.   0.   0
122010 25 20       4 111 225        15.   0.   1.        0.   0.   0.   0.   1
   0.   0.   0.   0.   0. 233.   0.   0.   0.   0.   0.   0.   0.   0.   0.   0.
   0.   0.   0.   0.   0. 233.
122020 25 20       4 111 225        74.   0.   1.        0.   0.   0.   0.   1
   0.   0.  41.   0. 190. 156.   0.   0.   0.   0.   0.   0.   0.   0.   0.   0.
   0.   0.   0.   0.   0. 387.
122030 25 20       4 111 225        22.   0.   1.        0.   0.   0.   0.   0
122040 25 20       4 111 225        36.   0.   1.        0.   0.   0.   0.   1
  10.  10.  10.  10.  10. 110.  10.  10.  10.  10.  10.  10.  10.  10.  10.  10.
  10.  10.  10.  10.  10. 300.
122050 25 20       4 111 225       189.   0.   1.        0.   0.   0.   0.   0
122060 25 20       4 111 225         4.   0.   1.        0.   0.   0.   0.   0
121710 30 20       1 110 230       636.   0.   1.        0.   0.   0.   0.   0
121720 30 20       1 110 230        92.   0.   1.        0.   0.   0.   0.   0
121730 30 20       1 110 230       328.   0.   1.        0.   0.   0.   0.   1
  21.  21.  21.  21.  21. 180.  21.  21.  21.  21.  21.  21.  21.  21.  21.  21.
  21.  21.  21.  21.  21. 579.
```

continued

4.5.2 Main Demand Model

The following is a listing of the main program and the subroutines used in the Demand Model. Also shown is the program used to obtain the delta-change file. These programs are described in Section 4.2 of this chapter.

```
100        OPTION LOAD
105        INTEGER CREST
110        DIMENSION CREST(77,30),PRED(29),SEFF(29),GUNIT(29),
120       &SLOPE(29),SEPT(29)
130        COMMON LABEL(28),LABEL3(28),LABEL1(28),
140       & WATER(5,77,29),SEWAGE(4,77,29),SWSS(77,29),BOUT(77,29),
150       &HEAD(11,10),IYEAR,LABEL2(28)
160        FILENAME KRD
170        INPUT, KRD
180        DO 1 N=2,29
190 1      READ(KRD,102)SLOPE(N),SEPT(N)
200        READ(KRD,103)(SEFF(N),N=1,29)
210        READ(KRD,1031)(LABEL(K),LABEL1(K),LABEL2(K),LABEL3(K),K=1,28)
220        READ(KRD,108)((HEAD(JH,JK),JK=1,10),JH=1,11)
230 5      READ(KRD,100,END=1000) IYEAR,JPROC,IYEAR1
240        IT=IYEAR-1969
250        DO 1111 N=2,29
260 1111   GUNIT(N)=SLOPE(N)*IT+SEPT(N)
270        READ(KRD,101)JPOL,JSOS,JWTP,JWSTS,JSPOL,JWS,JSTP,JRS
280        READ(KRD,101)KPOL,KSOS,KWTP,KWSTS,KSPOL,KWS,KSTP,KRS
290        DO 2 K=1,4
300        DO 2 L=1,77
310        DO 2 J=1,29
320        WATER(K,L,J)=0.0
330        WATER(K+1,L,J)=0.0
340 2      SEWAGE(K,L,J)=0.0
350        DO 3 K=1,77
360        DO 3 J=1,29
370        BOUT(K,J)=0.0
380 3      SWSS(K,J)=0.0
390        GO TO (50,60,70), JPROC
400 50     READ(KRD,104)NCLASS,NREST
410        READ(KRD,105)((CREST(JC,JR),JR=1,NREST),JC=1,NCLASS)
420 58     READ(KRD,106)ISAU,IPOLJ,IWS,IWTP,IWST,ISTP,IRS,ISOS,
430       &(PRED(I),I=1,7),INDY
435        KK=7
```

```
      IF(INDY-1)40,30,40
30    READ(KRD,110)(PRED(I),I=8,23)
      READ(KRD,111)(PRED(I),I=24,29)
      KK=29
40    IF(ISAU)51,52,51
51    DO 53 K=1,NCLASS
      DO 53 L=1,NREST
      IF(ISAU-CREST(K,L))54,55,54
55    N=K
      GO TO 56
54    CONTINUE
53    CONTINUE
      GO TO 53
56    GUNIT(1)=.5*IT+32.0+.01*PRED(1)
      DO 57 M=1,KK
      DEMAND=GUNIT(M)*PRED(M)
      WATER(1,N,M)=DEMAND+WATER(1,N,M)
57    SEWAGE(1,N,M)=SEFF(M)*DEMAND+SEWAGE(1,N,M)
      GO TO 58
52    READ(KRD,107)ISAU,IPOLJ,IWS,IWTP,IWST,ISTP,IRS,ISOS,KM,
     &WPRED,SPRED
      IF(ISAU)59,590,59
59    CONTINUE
      WPRED=1000.0*WPRED
      SPRED=SPRED*1000.0
      DO 500 K=1,NCLASS
      DO 500 L=1,NREST
      IF(ISAU-CREST(K,L))504,505,504
505   N=K
      GO TO 506
504   CONTINUE
500   CONTINUE
      GO TO 52
506   WATER(1,N,KM)=WATER(1,N,KM)+WPRED
      SEWAGE(1,N,KM)=SEWAGE(1,N,KM)+SPRED
      GO TO 52
590   CALL WATOUT(1,NCLASS)
      PRINT 109,(HEAD(1,JK),JK=1,10),(HEAD(11,JK),JK=1,10),IYEAR,IYEAR1
```

```
      DO 591 J=1,NCLASS
591   PRINT 1081,J,(CREST(J,M),M=1,NREST)
      CALL WRITE(1,NCLASS)
      CALL SEWOUT(1,NCLASS)
      PRINT 109,(HEAD(6,JK),JK=1,10),(HEAD(11,JK),JK=1,10),IYEAR,IYEAR1
      DO 592 J=1,NCLASS
592   PRINT 1081,J,(CREST(J,M),M=1,NREST)
      CALL WRITE(6,NCLASS)
      GO TO 5
60    READ(KRD,106)ISAU,IPOLJ,IWS,IWTP,IWST,ISTP,IRS,ISOS,
     &(PRED(I),I=1,7),INDY
      KK=7
      IF(INDY-1)45,35,45
35    READ(KRD,110)(PRED(I),I=8,23)
      READ(KRD,111)(PRED(I),I=24,29)
      KK=29
45    IF(ISAU)62,63,62
62    GUNIT(1)=.5*IT+32.0+.01*PRED(1)
      DO 61 II=1,KK
      JJ=II
      IF(JJ.GT.7) JJ=JJ+4
      DEMAND=GUNIT(II)*PRED(II)
      WATER(2,IPOLJ,II)=WATER(2,IPOLJ,II)+DEMAND
      WATER(3,ISOS,II)=WATER(3,ISOS,II)+DEMAND
      WATER(4,IWTP,II)=WATER(4,IWTP,II)+DEMAND
      WATER(5,IWST,II)=WATER(5,IWST,II)+DEMAND
      SEWAGE(2,IPOLJ,II)=SEWAGE(2,IPOLJ,II)+DEMAND*SEFF(II)
      SEWAGE(3,ISTP,II)=SEWAGE(3,ISTP,II)+DEMAND*SEFF(II)
      SEWAGE(4,IRS,II)=SEWAGE(4,IRS,II)+DEMAND*SEFF(II)
61    SWSS(IWS,II)=SWSS(IWS,II)+DEMAND*SEFF(II)
      GO TO 60
63    READ(KRD,107)ISAU,IPOLJ,IWS,IWTP,IWST,ISTP,IRS,ISOS,KM,
     &WPRED,SPRED
      IF(ISAU)69,690,69
69    CONTINUE
      WPRED=1000.0*WPRED
      SPRED=1000.0*SPRED
```

```
      WATER(2,IPOLJ,KM)=WATER(2,IPOLJ,KM)+WPRED
      WATER(3,ISOS,KM)=WATER(3,ISOS,KM)+WPRED
      WATER(4,IWTP,KM)=WATER(4,IWTP,KM)+WPRED
      WATER(5,IWST,KM)=WATER(5,IWST,KM)+WPRED
      SEWAGE(2,IPOLJ,KM)=SEWAGE(2,IPOLJ,KM)+SPRED
      SEWAGE(3,ISTP,KM)=SEWAGE(3,ISTP,KM)+SPRED
      SEWAGE(4,IRS,KM)=SEWAGE(4,IRS,KM)+SPRED
      SWSS(IWS,KM)=SWSS(IWS,KM)+SPRED
      GO TO 63
690    IF(JPOL)611,610,611
611   PRINT 109,(HEAD(2,JK),JK=1,10),(HEAD(11,JK),JK=1,10),IYEAR,IYEAR1
      CALL WATOUT (2,KPOL)
      CALL WRITE(2,KPOL)
610   IF(JSOS)613,612,613
613   PRINT 109,(HEAD(3,JK),JK=1,10),(HEAD(11,JK),JK=1,10),IYEAR,IYEAR1
      CALL WATOUT(3,KSOS)
      CALL WRITE(3,KSOS)
612   IF(JWTP)615,614,615
615  PRINT 109,(HEAD(4,JK),JK=1,10),(HEAD(11,JK),JK=1,10),IYEAR,IYEAR1
      CALL WATOUT(4,KWTP)
      CALL WRITE(4,KWTP)
614   IF(JWSTS)617,616,617
617   PRINT 109,(HEAD(5,JK),JK=1,10),(HEAD(11,JK),JK=1,10),IYEAR,IYEAR1
      CALL WATOUT(5,KWSTS)
      CALL WRITE(5,KWSTS)
616   IF(JSPOL)619,618,619
619   PRINT 109,(HEAD(7,JK),JK=1,10),(HEAD(11,JK),JK=1,10),IYEAR,IYEAR1
      CALL SEWOUT(2,KSPOL)
      CALL WRITE(7,KSPOL)
618   IF(JSTP)621,620,621
621   PRINT 109,(HEAD(8,JK),JK=1,10),(HEAD(11,JK),JK=1,10),IYEAR,IYEAR1
      CALL SEWOUT(3,KSTP)
      CALL WRITE(8,KSTP)
620   IF(JRS)623,622,623
623   PRINT 109,(HEAD(9,JK),JK=1,10),(HEAD(11,JK),JK=1,10),IYEAR,IYEAR1
      CALL SEWOUT(4,KRS)
      CALL WRITE(9,KRS)
```

```
      622   IF(JWS)625,624,625
      625   PRINT 109,(HEAD(10,JK),JK=1,10),(HEAD(11,JK),JK=1,10),IYEAR,IYEAR1
            CALL SWSOUT(KWS)
            CALL WRITE(10,KWS)
      624   CONTINUE
            GO TO 5
      70     READ(KRD,104)NCLASS,NREST
            READ(KRD,105)((CREST(JC,JR),JR=1,NREST),JC=1,NCLASS)
      78    READ(KRD,106)ISAU,IPOLJ,IWS,IWTP,IWST,ISTP,IRS,ISOS,
           &(PRED(I),I=1,7),INDY
            KK=7
            IF(INDY-1)81,82,81
      82    READ(KRD,110)(PRED(I),I=8,23)
            READ(KRD,111)(PRED(I),I=24,29)
            KK=29
        81  IF(ISAU)71,72,71
      71    DO 73 K=1,NCLASS
            DO 73 L=1,NREST
            IF(ISAU-CREST(K,L))74,75,74
      75    N=K
            GO TO 76
      74    CONTINUE
      73    CONTINUE
            GO TO 780
      76    GUNIT(1)=.5*IT+32.0+.01*PRED(1)
            DO 77 II=1,KK
            DEMAND=GUNIT(II)*PRED(II)
            WATER(1,N,II)=WATER(1,N,II)+DEMAND
            WATER(2,IPOLJ,II)=WATER(2,IPOLJ,II)+DEMAND
            SEWAGE(1,N,II)=SEWAGE(1,N,II)+DEMAND*SEFF(II)
            WATER(3,ISOS,II)=WATER(3,ISOS,II)+DEMAND
            WATER(4,IWTP,II)=WATER(4,IWTP,II)+DEMAND
            WATER(5,IWST,II)=WATER(5,IWST,II)+DEMAND
            SEWAGE(2,IPOLJ,II)=SEWAGE(2,IPOLJ,II)+DEMAND*SEFF(II)
            SEWAGE(3,ISTP,II)=SEWAGE(3,ISTP,II)+DEMAND*SEFF(II)
            SEWAGE(4,IRS,II)=SEWAGE(4,IRS,II)+DEMAND*SEFF(II)
      77    SWSS(IWS,II)=SWSS(IWS,II)+DEMAND*SEFF(II)
            GO TO 78
```

```
1840 750   GUNIT(1)=.5*IT+32.0+.01*PRED(1)
1850       DO 777 II=1,KK
1860       DEMAND=GUNIT(II)*PRED(II)
1870       WATER(2,IPOLJ,II)=WATER(2,IPOLJ,II)+DEMAND
1880       WATER(3,ISOS,II)=WATER(3,ISOS,II)+DEMAND
1890       WATER(4,IWTP,II)=WATER(4,IWTP,II)+DEMAND
1900       WATER(5,IWST,II)=WATER(5,IWST,II)+DEMAND
1910       SEWAGE(2,IPOLJ,II)=SEWAGE(2,IPOLJ,II)+DEMAND*SEFF(II)
1920       SEWAGE(3,ISTP,II)=SEWAGE(3,ISTP,II)+DEMAND*SEFF(II)
1930       SEWAGE(4,IRS,II)=SEWAGE(4,IRS,II)+DEMAND*SEFF(II)
1940 777   SWSS(IWS,II)=SWSS(IWS,II)+DEMAND*SEFF(II)
1950       GO TO 78
1960 72    READ(KRD,107)ISAU,IPOLJ,IWS,IWTP,IWST,ISTP,IRS,ISOS,KM,
1970      &WPRED,SPRED
1980       IF(ISAU)79,790,79
1990 79    CONTINUE
2000       WPRED=WPRED*1000.0
2010       SPRED=SPRED*1000.0
2020       DO 700 K=1,NCLASS
2030       DO 700 L=1,NREST
2040       IF(ISAU-CREST(K,L))704,705,704
2050 705   N=K
2060       GO TO 706
2070 704   CONTINUE
2080 700   CONTINUE
2090       GO TO 770
2100 706   WATER(1,N,KM)=WATER(1,N,KM)+WPRED
2110       SEWAGE(1,N,KM)=SEWAGE(1,N,KM)+SPRED
2120 770   WATER(2,IPOLJ,KM)=WATER(2,IPOLJ,KM)+WPRED
2130       WATER(3,ISOS,KM)=WATER(3,ISOS,KM)+WPRED
2140       WATER(4,IWTP,KM)=WATER(4,IWTP,KM)+WPRED
2150       WATER(5,IWST,KM)=WATER(5,IWST,KM)+WPRED
2160       SEWAGE(2,IPOLJ,KM)=SEWAGE(2,IPOLJ,KM)+SPRED
2170       SEWAGE(3,ISTP,KM)=SEWAGE(3,ISTP,KM)+SPRED
2180       SEWAGE(4,IRS,KM)=SEWAGE(4,IRS,KM)+SPRED
2190       SWSS(IWS,KM)=SWSS(IWS,KM)+SPRED
2200       GO TO 72
```

```
2210 790    CALL WATOUT(1,NCLASS)
2220        PRINT 109,(HEAD(1,JK),JK=1,10),(HEAD(11,JK),JK=1,10),IYEAR,IYEAR1
2230        DO 791 J=1,NCLASS
2240 791    PRINT 1081,J,(CREST(J,M),M=1,NREST)
2250        CALL WRITE(1,NCLASS)
2260        CALL SEWOUT(1,NCLASS)
2270        PRINT 109,(HEAD(6,JK),JK=1,10),(HEAD(11,JK),JK=1,10),IYEAR,IYEAR1
2280        DO 792 J=1,NCLASS
2290 792    PRINT 1081, J,(CREST(J,M),M=1,NREST)
2300        CALL WRITE(6,NCLASS)
2310        GO TO 690
2320 100    FORMAT(I4,1X,I1,I5)
2330 101    FORMAT(8I2)
2340 102    FORMAT(F6.0,2X,F6.0)
2350 103    FORMAT(F6.0)
2360 104    FORMAT(I3,I2)
2370 105    FORMAT(I6)
2380 1031   FORMAT(4A4)
2390 106    FORMAT     (I6,1X,I2,I3,6X,5I2,6X,3F5.0,5X,4F5.0,2X,I1)
2400 107    FORMAT(I6,1X,I2,I3,6X,5I2,1X,I2,2F5.0)
2410 1081   FORMAT(1H0,"CLASS",2X,I3,6X,10(I6,3X)/10(I6,3X)/10(I6,3X))
2420 108    FORMAT(10A4)
2430 109    FORMAT(1S(/),20A4,5X,4HYEAR,2X,I4,"-",I4)

2440 110    FORMAT(16F5.0)
2450 111    FORMAT(6F5.0)
2460  1000 STOP
2470        END

READY
```

```
100         SUBROUTINE SEWOUT(KTYP,KKK)
115         COMMON LABEL(28),LABEL3(28),LABEL1(28),
120        & WATER(5,77,29),SEWAGE(4,77,29),SWSS(77,29),BOUT(77,29),
130        &HEAD(11,10),IYEAR,LABEL2(28)
140         DO 901 KOUT=1,KKK
150         BOUT(KOUT,27)=0.0
160         BOUT(KOUT,28)=0.0
170         BOUT(KOUT,1)=SEWAGE(KTYP,KOUT,1)
180         BOUT(KOUT,2)=SEWAGE(KTYP,KOUT,2)+SEWAGE(KTYP,KOUT,5)+
190        &SEWAGE(KTYP,KOUT,6)+SEWAGE(KTYP,KOUT,7)
200         DO 905 K4=3,26
210         K5=K4+3
220     905 BOUT(KOUT,K4)=SEWAGE(KTYP,KOUT,K5)
230         DO 904 K1=8,29
240     904 BOUT(KOUT,27)=BOUT(KOUT,27) + SEWAGE(KTYP,KOUT,K1)
250         DO 903 K1=8,9
260         K2=K1-3
270     903 BOUT(KOUT,K2)=SEWAGE(KTYP,KOUT,K1)
280         DO 902 K3=1,26
285     902 BOUT(KOUT,28)=BOUT(KOUT,28)+BOUT(KOUT,K3)
290     901 CONTINUE
300         RETURN
310         END

READY
```

```
100         SUBROUTINE WATOUT(KTYP,KKK)
115         COMMON LABEL(28),LABEL3(28),LABEL1(28),
120        & WATER(5,77,29),SEWAGE(4,77,29),SWSS(77,29),BOUT(77,29),
130        &HEAD(11,10),IYEAR,LABEL2(28)
140         DO 901 KOUT=1,KKK
150         BOUT(KOUT,27)=0.0
160         BOUT(KOUT,28)=0.0
170         BOUT(KOUT,1)=WATER(KTYP,KOUT,1)
180         BOUT(KOUT,2)=WATER(KTYP,KOUT,2)+WATER(KTYP,KOUT,5)+
190        &WATER(KTYP,KOUT,6)+WATER(KTYP,KOUT,7)
200         DO 905 K4=3,26
210         K5=K4+3
220     905 BOUT(KOUT,K4)=WATER(KTYP,KOUT,K5)
230         DO 904 K1=8,29
240     904 BOUT(KOUT,27)=BOUT(KOUT,27) + WATER(KTYP,KOUT,K1)
250         DO 903 K1=8,9
260         K2=K1-3
270     903 BOUT(KOUT,K2)=WATER(KTYP,KOUT,K1)
280         DO 902 K3=1,26
285     902 BOUT(KOUT,28)=BOUT(KOUT,28)+BOUT(KOUT,K3)
290     901 CONTINUE
300         RETURN
310         END

READY
```

```
EDI LIS

100         SUBROUTINE SWSOUT(KKK)
115         COMMON LABEL(28),LABEL3(28),LABEL1(28),
120        & WATER(5,77,29),SEWAGE(4,77,29),SWSS(77,29),BOUT(77,29),
130        &HEAD(11,10),IYEAR,LABEL2(28)
140         DO 901 KOUT=1,KKK
150         BOUT(KOUT,27)=0.0
160         BOUT(KOUT,28)=0.0
170         BOUT(KOUT,1)=SWSS(KOUT,1)
180         BOUT(KOUT,2)=SWSS(KOUT,2)+SWSS(KOUT,5)+
190        &SWSS(KOUT,6)+SWSS(KOUT,7)
200         DO 905 K4=3,26
210         K5=K4+3
220     905 BOUT(KOUT,K4)=SWSS(KOUT,K5)
230         DO 904 K1=8,29
240     904 BOUT(KOUT,27)=BOUT(KOUT,27) + SWSS(KOUT,K1)
250         DO 903 K1=8,9
260         K2=K1-3
270     903 BOUT(KOUT,K2)=SWSS(KOUT,K1)
280         DO 902 K3=1,26
285     902 BOUT(KOUT,28)=BOUT(KOUT,28)+BOUT(KOUT,K3)
290     901 CONTINUE
300         RETURN
310         END

READY
```

```
100       SUBROUTINE WRITE(KH,KL)
110       COMMON LABEL(28),LABEL3(28),LABEL1(28),
120      & WATER(5,77,29),SEWAGE(4,77,29),SWSS(77,29),BOUT(77,29),
130      &HEAD(11,10),IYEAR,LABEL2(28)
140       LL=1
150       LM=8
160 890   PRINT 100
170 891   IF(LM-KL) 804,804,806
180 806   LM=KL
190 804   PRINT 101,(JJ,JJ=LL,LM)
200       DO 802 JK=1,28
210       DO 997 JL=LL,LM
220  997  BOUT(JL,JK) = BOUT(JL,JK) / 1000.
230       PRINT 102, LABEL(JK),LABEL1(JK),LABEL2(JK),LABEL3(JK),(BOUT(JL,JK),JL=LL,LM)
240       DO 996 JL=LL,LM
250  996  BOUT(JL,JK) = BOUT(JL,JK) * 1000.
260       DO 802 KK=LL,LM
270 802   BOUT(KK,JK)=0.0
280       IF(LM-KL) 807,808,808
290 807   LL=LL+8
300       LM=LM+8
310 894   CONTINUE
320       GO TO 890
330 808   RETURN
340 100   FORMAT(1HO)
350 101   FORMAT(1H ,26X,8(I3,8X))
360 102   FORMAT(1H ,4A4,4X,8(   F9.1,2X))
370       END

READY
```

```
120       DIMENSION SLOPE(29),SEPT(29),PRED(29),SEFF(29),LABEL2(28),HEAD(11,10)
125      &,LABEL(28),LABEL1(28),LABEL3(28),IJK(9),JKI(9),TRED(29)
130       FILENAME KRD,KRK,KTP
140       INPUT, KRD
145       INPUT, KRK
150       INPUT, KTP
160       DO 1 K=2,29
170 1     READ(KRD,102)SLOPE(K),SEPT(K)
180  102  FORMAT(F6.0,2X,F6.0)
185 1021  FORMAT(F6.0,2X,F6.2)
190       DO 2 K=2,29
200    2  WRITE(KTP,1021)SLOPE(K),SEPT(K)
210       READ(KRD,103)(SEFF(N),N=1,29)
220  103  FORMAT(F6.0)
230       WRITE(KTP,1032)(SEFF(N),N=1,29)
235 1032  FORMAT(F6.2)
240       READ(KRD,1031)(LABEL(K),LABEL1(K),LABEL2(K),LABEL3(K),K=1,28)
250  1031 FORMAT(4A4)
260       WRITE(KTP,1031)(LABEL(K),LABEL1(K),LABEL2(K),LABEL3(K),K=1,28)
270       READ(KRD,108)((HEAD(JH,JK),JK=1,10),JH=1,11)
280  108  FORMAT(10A4)
290       WRITE(KTP,108)((HEAD(JH,JK),JK=1,10),JH=1,11)
300       READ(KRD,100)IYEAR,JPROC
305       IYEAR=IYEAR+20
310  100  FORMAT(I4,1X,I1)
320       WRITE(KTP,100)IYEAR,JPROC
325       DO 65 JJ=1,2
330       READ(KRD,101)JPOL,JSOS,JWTP,JWSTS,JSPOL,JWS,JSTP,JRS
340  101  FORMAT(8I2)
350       WRITE(KTP,101)JPOL,JSOS,JWTP,JWSTS,JSPOL,JWS,JSTP,JRS
355    65 CONTINUE
360 60    READ(KRD,106)(IJK(I),I=1,8),(PRED(I),I=1,7),INDY
```

```
370         READ(KRK,106)(JKI(I),I=1,8),(TRED(I),I=1,7),INDZ
380         KKK=7
390         IF(INDY-1)45,35,45
400 35      READ(KRD,110)(PRED(I),I=8,23)
410         READ(KRD,111)(PRED(I),I=24,29)
420         READ(KRK,110)(TRED(I),I=8,23)
430         READ(KRK,111)(TRED(I),I=24,29)
440         KKK=29
450 45      IF(IJK(1).EQ.0) GO TO 63
460         DO 50 I=1,KKK
470         PRET=TRED(I)-PRED(I)
475 50      PRED(I)=PRET
480         WRITE(KTP,106)(IJK(I),I=1,8),(PRED(I),I=1,7),INDY
490         IF(KKK.EQ.7) GO TO 51
500         WRITE(KTP,110)(PRED(I),I=8,23)
510         WRITE(KTP,111)(PRED(I),I=24,29)
520 51      GO TO 60
521 106     FORMAT(16,1X,12,13,6X,5I2,6X,3F5.0,5X,4F5.0,2X,I1)
522 107     FORMAT(16,1X,12,13,6X,5I2,1X,I2,2F5.0)
523 110     FORMAT(16F5.0)
524 111     FORMAT(6F5.0)
530 63      READ(KRD,107)(IJK(I),I=1,8),KM,WPRED,SPRED
540         READ(KRK,107)(JKI(I),I=1,8),KM,WPRDD,SPRDD
550         IF(IJK(1).EQ.0) GO TO 71
560         W=WPRDD-WPRED
570         WPRED=W
580         S=SPRDD-SPRED
590         SPRED=S
600         IF(KM.EQ.0) KM=1
610         WRITE(KTP,107)(IJK(I),I=1,8),KM,WPRED,SPRED
620         GO TO 63
630 71      STOP
640         END
```

4.6 Model Validation

The output of the model is shown in this section for the year 1970. Also shown is the output from the data file developed by subtracting the 1970 data file from the 1990 data file. This output is the change in water requirements and sewage output over this time period. This output is extremely valuable in examining the delta change in the specific study areas.

It should be noted that this output is not meant to be used for planning in the ACOG area, since some of the data were unavailable and were added from unreliable sources for explanatory and demonstrative purposes.

WATER BY POLITICAL JURISDICTOICN THOUSANDS OF GALLONS PER DAY YEAR 1970- 0

	1	2	3	4	5	6	7	8
DOMESTIC	11.8	109.9	3555.8	1399.3	4380.3	870.9	17.0	70.8
INSTITUTIONAL	200.5	10.4	2262.6	23.0	403.6	0.	0.	0.
COMMERCIAL	33.3	10.4	391.2	11.9	53.9	0.	0.	0.
IRRIGATED LAND	0.	0.	0.	0.	0.	0.	0.	0.
SIC 19	3.1	6.5	6.1	4.1	4.1	4.1	10.2	10.2
SIC 20	21.0	44.8	42.0	28.0	28.0	28.0	70.0	70.0
SIC 21	2.5	5.4	5.0	3.4	3.4	3.4	8.4	8.4
SIC 22	9.7	20.6	19.3	12.9	12.9	12.9	32.2	32.2
SIC 23	0.9	1.9	1.8	1.2	1.2	1.2	3.0	3.0
SIC 24	13.6	28.9	27.1	18.1	18.1	18.1	45.2	45.2
SIC 25	1.2	2.5	2.4	1.6	1.6	1.6	3.9	3.9
SIC 26	146.4	312.4	292.9	195.2	195.2	195.2	488.1	488.1
SIC 27	3.9	8.3	7.8	5.2	5.2	5.2	13.0	13.0
SIC 28	218.8	466.7	437.5	291.7	291.7	291.7	729.2	729.2
SIC 29	377.4	805.0	754.7	503.1	503.1	503.1	1257.9	1257.9
SIC 30	17.0	262.2	33.9	22.6	22.6	22.6	56.5	56.5
SIC 31	3.2	6.9	6.4	4.3	4.3	4.3	10.7	10.7
SIC 32	21.5	45.9	43.0	28.7	28.7	28.7	71.7	71.7
SIC 33	167.9	358.3	335.9	223.9	223.9	223.9	559.8	559.8
SIC 34	3.7	8.0	7.5	5.0	5.0	5.0	12.5	12.5
SIC 35	6.3	13.5	12.6	8.4	8.4	8.4	21.0	21.0
SIC 36	4.0	8.4	7.9	5.3	5.3	5.3	13.2	13.2
SIC 37	8.3	17.6	16.5	11.0	11.0	11.0	27.5	27.5
SIC 38	5.4	11.6	10.9	7.3	7.3	7.3	18.2	18.2
SIC 39	2.6	5.6	5.2	3.5	3.5	3.5	8.7	8.7
SIC OTHER	18.9	52.3	37.8	25.2	25.2	25.2	63.0	63.0
TOTAL ALL SICS	1057.2	2493.4	2114.4	1409.6	1409.6	1409.6	3524.0	3524.0
TOTAL ALL USER	1302.9	2624.1	8323.9	2843.8	6247.4	2288.5	3541.0	3602.8

WATER BY SOURCE OF SUPPLY — THOUSANDS OF GALLONS PER DAY — YEAR 1970- 0

	1	2	3	4	5	6	7	8
DOMESTIC	0.2	0.	0.	7.9	0.	0.	0.	0.
INSTITUTIONAL	210.9	0.	0.	0.	0.	0.	0.	0.
COMMERCIAL	43.7	0.	0.	0.	0.	0.	0.	0.
IRRIGATED LAND	0.	0.	0.	0.	0.	0.	0.	0.
SIC 19	7.5	0.	0.	2.0	0.	0.	0.	0.
SIC 20	51.8	0.	0.	14.0	0.	0.	0.	0.
SIC 21	6.2	0.	0.	1.7	0.	0.	0.	0.
SIC 22	23.8	0.	0.	6.4	0.	0.	0.	0.
SIC 23	2.2	0.	0.	0.6	0.	0.	0.	0.
SIC 24	33.4	0.	0.	9.0	0.	0.	0.	0.
SIC 25	2.9	0.	0.	0.8	0.	0.	0.	0.
SIC 26	361.2	0.	0.	97.6	0.	0.	0.	0.
SIC 27	9.6	0.	0.	2.6	0.	0.	0.	0.
SIC 28	539.6	0.	0.	145.8	0.	0.	0.	0.
SIC 29	930.8	0.	0.	251.6	0.	0.	0.	0.
SIC 30	267.8	0.	0.	11.3	0.	0.	0.	0.
SIC 31	8.0	0.	0.	2.2	0.	0.	0.	0.
SIC 32	53.1	0.	0.	14.3	0.	0.	0.	0.
SIC 33	414.3	0.	0.	112.0	0.	0.	0.	0.
SIC 34	9.2	0.	0.	2.5	0.	0.	0.	0.
SIC 35	15.6	0.	0.	4.2	0.	0.	0.	0.
SIC 36	9.8	0.	0.	2.6	0.	0.	0.	0.
SIC 37	20.4	0.	0.	5.5	0.	0.	0.	0.
SIC 38	13.4	0.	0.	3.6	0.	0.	0.	0.
SIC 39	6.5	0.	0.	1.7	0.	0.	0.	0.
SIC OTHER	58.6	0.	0.	12.6	0.	0.	0.	0.
TOTAL ALL SICS	2845.8	0.	0.	704.8	0.	0.	0.	0.
TOTAL ALL USER	3100.6	0.	0.	712.7	0.	0.	0.	0.

WATER BY WATER TREATMENT PLANT THOUSANDS OF GALLONS PER DAY YEAR 1970- 0

	1	2	3	4	5	6	7	8
DOMESTIC	9767.3	3456.0	1834.8	19736.1	0.9	510.7	6536.2	2670.5
INSTITUTIONAL	3731.2	1656.1	0.	1313.6	0.	0.	433.8	34.7
COMMERCIAL	544.8	55.9	0.	717.4	0.	0.	169.2	23.7
IRRIGATED LAND	0.	1252.5	0.	0.	0.	0.	0.	0.
SIC 19	36.7	12.0	4.1	16.3	2.0	9.0	2.0	69.8
SIC 20	252.0	82.6	28.0	112.1	14.0	61.6	14.0	478.8
SIC 21	30.2	9.9	3.4	20.3	1.7	7.4	1.7	57.5
SIC 22	115.9	38.0	12.9	51.6	6.4	28.3	6.4	220.2
SIC 23	56.0	3.5	1.2	234.8	0.6	7.0	0.6	20.5
SIC 24	2400.1	15487.3	18.1	7589.1	9.0	255.8	9.0	309.2
SIC 25	14.2	4.7	1.6	6.3	0.8	3.5	0.8	27.0
SIC 26	1757.2	576.0	195.2	781.9	97.6	429.5	97.6	3338.6
SIC 27	46.8	15.3	5.2	20.8	2.6	11.4	2.6	88.9
SIC 28	2625.1	860.5	291.7	1168.2	145.8	641.7	145.8	4987.7
SIC 29	4528.3	1484.3	503.1	2015.1	251.6	1106.9	251.6	8603.7
SIC 30	429.4	66.7	22.6	90.5	11.3	49.7	11.3	386.9
SIC 31	38.7	12.7	4.3	17.2	2.2	9.5	2.2	73.9
SIC 32	258.1	84.6	28.7	114.9	14.3	63.1	14.3	490.4
SIC 33	2015.3	660.6	223.9	896.8	112.0	492.6	112.0	3829.0
SIC 34	44.8	14.7	5.0	19.9	2.5	11.0	2.5	85.2
SIC 35	75.8	24.8	8.4	33.7	4.2	18.5	4.2	144.0
SIC 36	47.5	15.6	5.3	21.1	2.6	11.6	2.6	90.3
SIC 37	99.2	32.5	11.0	44.1	5.5	24.2	5.5	188.4
SIC 38	65.3	21.4	7.3	29.1	3.6	16.0	3.6	124.1
SIC 39	31.5	10.3	3.5	14.0	1.7	7.7	1.7	59.6
SIC OTHER	419.1	1098.7	25.2	332.9	12.6	72.8	12.6	432.6
TOTAL ALL SICS	15387.3	20616.7	1409.6	14131.0	704.8	3338.9	704.8	24108.4
TOTAL ALL USER	29430.6	27035.1	3244.4	35898.1	705.7	3849.6	7844.0	26843.3

WATER BY WATER STORAGE SYSTEM — THOUSANDS OF GALLONS PER DAY — YEAR 1970- 0

	1	2	3	4	5
DOMESTIC	30445.2	1465.9	2877.5	1657.4	72.5
INSTITUTIONAL	6332.9	23.0	313.5	0.	0.
COMMERCIAL	1327.9	11.9	169.2	0.	0.
IRRIGATED LAND	1252.5	0.	0.	0.	0.
SIC 19	120.2	2.0	5.1	12.2	12.4
SIC 20	824.7	14.0	35.0	84.0	85.4
SIC 21	105.9	1.7	4.2	10.1	10.2
SIC 22	379.4	6.4	16.1	38.6	39.3
SIC 23	314.3	0.6	1.5	3.6	3.7
SIC 24	25936.7	9.0	22.6	54.2	55.1
SIC 25	46.5	0.8	2.0	4.7	4.8
SIC 26	5750.3	97.6	244.0	585.7	595.5
SIC 27	153.2	2.6	6.5	15.6	15.9
SIC 28	8591.4	145.8	364.6	875.0	889.6
SIC 29	14820.0	251.6	628.9	1509.4	1534.6
SIC 30	391.7	11.3	28.2	67.8	68.9
SIC 31	126.7	2.2	5.4	12.9	13.1
SIC 32	844.8	14.3	35.8	86.0	87.5
SIC 33	6595.6	112.0	279.9	671.8	683.0
SIC 34	146.7	2.5	6.2	14.9	15.2
SIC 35	248.0	4.2	10.5	25.3	25.7
SIC 36	155.5	2.6	6.6	15.8	16.1
SIC 37	324.6	5.5	13.8	33.1	33.6
SIC 38	213.8	3.6	9.1	21.8	22.1
SIC 39	104.7	1.7	4.4	10.5	12.2
SIC OTHER	2708.9	12.6	31.5	75.6	77.4
TOTAL ALL SICS	69404.4	704.8	1762.0	4228.8	4301.4
TOTAL ALL USER	117262.9	2205.6	5122.3	5886.2	4373.9

SEWAGE BY POLITICAL JURISDICTION THOUSANDS OF GALLONS PER DAY YEAR 1970- 0

	1	2	3	4	5	6	7	8
DOMESTIC	8.3	76.9	2469.1	979.5	3066.2	615.2	11.9	55.2
INSTITUTIONAL	140.4	7.3	1583.8	16.1	282.5	0.	0.	0.
COMMERCIAL	23.3	7.3	273.8	8.4	37.7	0.	0.	0.
IRRIGATED LAND	0.	0.	0.	0.	0.	0.	0.	0.
SIC 19	2.9	6.1	5.8	3.8	3.8	3.8	9.6	9.6
SIC 20	19.1	40.8	38.2	25.5	25.5	25.5	63.7	63.7
SIC 21	1.7	3.6	3.4	2.3	2.3	2.3	5.6	5.6
SIC 22	8.8	18.8	17.6	11.7	11.7	11.7	29.3	29.3
SIC 23	0.8	1.8	1.7	1.1	1.1	1.1	2.8	2.8
SIC 24	11.1	23.7	22.2	14.8	14.8	14.8	37.1	37.1
SIC 25	1.1	2.4	2.2	1.5	1.5	1.5	3.7	3.7
SIC 26	137.6	293.6	275.3	183.5	183.5	183.5	458.8	458.8
SIC 27	3.7	7.8	7.3	4.9	4.9	4.9	12.2	12.2
SIC 28	205.6	438.7	411.3	274.2	274.2	274.2	685.4	685.4
SIC 29	354.7	756.7	709.4	473.0	473.0	473.0	1182.4	1182.4
SIC 30	16.1	249.1	32.2	21.5	21.5	21.5	53.7	53.7
SIC 31	3.0	6.5	6.1	4.0	4.0	4.0	10.1	10.1
SIC 32	18.9	40.4	37.9	25.2	25.2	25.2	63.1	63.1
SIC 33	157.9	336.8	315.7	210.5	210.5	210.5	526.2	526.2
SIC 34	3.5	7.4	6.9	4.6	4.6	4.6	11.6	11.6
SIC 35	6.0	12.8	12.0	8.0	8.0	8.0	20.0	20.0
SIC 36	3.4	7.3	6.9	4.6	4.6	4.6	11.5	11.5
SIC 37	7.9	16.8	15.7	10.5	10.5	10.5	26.2	26.2
SIC 38	4.9	10.5	9.8	6.5	6.5	6.5	16.3	16.3
SIC 39	2.4	5.2	4.9	3.3	3.3	3.3	8.1	8.1
SIC OTHER	17.8	49.2	35.5	23.7	23.7	23.7	59.2	59.2
TOTAL ALL SICS	989.0	2335.9	1978.0	1318.7	1318.7	1318.7	3296.7	3296.7
TOTAL ALL USER	1161.0	2427.4	6324.7	2322.6	4705.2	1933.9	3308.6	3351.0

SEWAGE BY SEWAGE TREATMENT PLANT — THOUSANDS OF GALLONS PER DAY — YEAR 1970- 0

	1	2	3	4	5	6	7	8
DOMESTIC	34.8	76.9	2489.1	989.9	172.7	0.	0.	0.
INSTITUTIONAL	147.7	0.	1583.8	16.1	0.	0.	0.	0.
COMMERCIAL	30.6	0.	273.8	8.4	0.	0.	0.	0.
IRRIGATED LAND	0.	0.	0.	0.	0.	0.	0.	0.
SIC 19	11.9	1.9	5.8	3.8	5.8	0.	0.	0.
SIC 20	79.0	12.7	38.2	25.5	38.2	0.	0.	0.
SIC 21	7.0	1.1	3.4	2.3	3.4	0.	0.	0.
SIC 22	36.3	5.9	17.6	11.7	17.6	0.	0.	0.
SIC 23	3.5	0.6	1.7	1.1	9.0	0.	0.	0.
SIC 24	46.0	7.4	22.2	14.8	379.5	0.	0.	0.
SIC 25	4.6	0.7	2.2	1.5	2.2	0.	0.	0.
SIC 26	568.9	91.8	275.3	183.5	275.3	0.	0.	0.
SIC 27	15.2	2.4	7.3	4.9	7.3	0.	0.	0.
SIC 28	850.0	137.1	411.3	274.2	411.3	0.	0.	0.
SIC 29	1466.1	236.5	709.4	473.0	709.4	0.	0.	0.
SIC 30	231.3	10.7	32.2	21.5	32.2	0.	0.	0.
SIC 31	12.5	2.0	6.1	4.0	6.1	0.	0.	0.
SIC 32	78.2	12.6	37.9	25.2	37.9	0.	0.	0.
SIC 33	652.5	105.2	315.7	210.5	315.7	0.	0.	0.
SIC 34	14.4	2.3	6.9	4.6	6.9	0.	0.	0.
SIC 35	24.8	4.0	12.0	8.0	12.0	0.	0.	0.
SIC 36	14.2	2.3	6.9	4.6	6.9	0.	0.	0.
SIC 37	32.5	5.2	15.7	10.5	15.7	0.	0.	0.
SIC 38	20.3	3.3	9.8	6.5	9.8	0.	0.	0.
SIC 39	10.1	1.6	4.9	3.3	4.9	0.	0.	0.
SIC OTHER	84.7	11.8	35.5	23.7	70.0	0.	0.	0.
TOTAL ALL SICS	4313.9	659.3	1978.0	1318.7	2377.2	0.	0.	0.
TOTAL ALL USER	4526.9	736.3	6324.7	2333.0	2549.9	0.	0.	0.

SEWAGE BY RECEIVING STREAM — THOUSANDS OF GALLONS PER DAY — YEAR 1970- 0

	1	2	3	4	5	6	7	8
DOMESTIC	2607.1	17076.2	871.0	4058.5	1374.5	0.	8.3	2022.5
INSTITUTIONAL	1731.5	1898.0	108.9	84.2	171.2	0.	215.6	0.
COMMERCIAL	304.4	409.6	13.5	0.	8.4	0.	215.6	0.
IRRIGATED LAND	0.	876.7	0.	0.	0.	0.	0.	0.
SIC 19	23.4	77.9	2.9	20.1	6.1	0.	0.	3.5
SIC 20	155.4	517.2	19.1	133.8	40.8	0.	0.	22.9
SIC 21	13.7	50.3	1.7	11.8	3.6	0.	0.	2.0
SIC 22	71.5	237.9	8.8	61.5	18.8	0.	0.	10.5
SIC 23	14.2	251.3	2.9	11.4	1.8	0.	0.	13.1
SIC 24	447.7	17704.7	158.6	521.9	37.1	0.	14.8	1849.5
SIC 25	9.1	30.1	1.1	7.8	2.4	0.	0.	1.3
SIC 26	1119.5	3725.6	137.6	963.5	293.6	0.	0.	165.2
SIC 27	29.8	99.2	3.7	25.7	7.8	0.	0.	4.4
SIC 28	1672.5	5565.8	205.6	1439.4	438.7	0.	0.	246.6
SIC 29	2885.0	9600.9	354.7	2483.0	756.7	0.	0.	425.7
SIC 30	345.7	435.8	16.1	112.7	34.4	0.	0.	19.3
SIC 31	24.7	82.1	3.0	21.2	6.5	0.	0.	3.6
SIC 32	154.0	512.3	18.9	132.5	40.4	0.	0.	22.7
SIC 33	1284.0	4272.8	157.9	1105.0	336.8	0.	0.	189.4
SIC 34	28.3	94.0	3.5	24.3	7.4	0.	0.	4.2
SIC 35	48.8	162.4	6.0	42.0	12.8	0.	0.	7.2
SIC 36	28.0	93.3	3.4	24.1	7.3	0.	0.	4.1
SIC 37	63.9	212.5	7.9	55.0	16.8	0.	0.	9.4
SIC 38	39.9	132.6	4.9	34.3	10.5	0.	0.	5.9
SIC 39	19.9	67.5	2.4	18.6	5.2	0.	0.	2.9
SIC OTHER	190.3	2030.7	26.8	161.9	38.2	0.	1.1	171.5
TOTAL ALL SICS	8669.0	45957.3	1147.6	7411.6	2123.6	0.	16.0	3185.2
TOTAL ALL USER	13392.0	66217.8	2141.0	11554.2	3677.7	0.	455.5	5207.8

SEWAGE BY WATERSHED — THOUSANDS OF GALLONS PER DAY — YEAR 1970- 0

	1	2	3	4	5	6	7	8
DOMESTIC	0.2	0.	0.	0.	0.	0.	0.	0.
INSTITUTIONAL	147.7	0.	0.	0.	0.	0.	0.	0.
COMMERCIAL	30.6	0.	0.	0.	0.	0.	0.	0.
IRRIGATED LAND	0.	0.	0.	0.	0.	0.	0.	0.
SIC 19	7.1	0.	0.	0.	0.	0.	0.	0.
SIC 20	47.1	0.	0.	0.	0.	0.	0.	0.
SIC 21	4.2	0.	0.	0.	0.	0.	0.	0.
SIC 22	21.7	0.	0.	0.	0.	0.	0.	0.
SIC 23	2.1	0.	0.	0.	0.	0.	0.	0.
SIC 24	27.4	0.	0.	0.	0.	0.	0.	0.
SIC 25	2.7	0.	0.	0.	0.	0.	0.	0.
SIC 26	339.5	0.	0.	0.	0.	0.	0.	0.
SIC 27	9.0	0.	0.	0.	0.	0.	0.	0.
SIC 28	507.2	0.	0.	0.	0.	0.	0.	0.
SIC 29	675.0	0.	0.	0.	0.	0.	0.	0.
SIC 30	254.4	0.	0.	0.	0.	0.	0.	0.
SIC 31	7.5	0.	0.	0.	0.	0.	0.	0.
SIC 32	46.7	0.	0.	0.	0.	0.	0.	0.
SIC 33	389.4	0.	0.	0.	0.	0.	0.	0.
SIC 34	8.6	0.	0.	0.	0.	0.	0.	0.
SIC 35	14.8	0.	0.	0.	0.	0.	0.	0.
SIC 36	8.5	0.	0.	0.	0.	0.	0.	0.
SIC 37	19.4	0.	0.	0.	0.	0.	0.	0.
SIC 38	12.1	0.	0.	0.	0.	0.	0.	0.
SIC 39	6.0	0.	0.	0.	0.	0.	0.	0.
SIC OTHER	55.1	0.	0.	0.	0.	0.	0.	0.
TOTAL ALL SICS	2665.5	0.	0.	0.	0.	0.	0.	0.
TOTAL ALL USER	2843.9	0.	0.	0.	0.	0.	0.	0.

CHAPTER V

WATER NETWORK MODEL

5.1 Introduction

The previous chapters of this report have been concerned with the development of needs, and exploring the alternate worlds, and creating the data for the analysis of these worlds. It is the purpose of Chapters V and VI to detail the procedures for the elimination of the unfeasible, the simplification of the decisions and models that are needed to analyze the area, and finally the tying of these needs to the supplies by an optimal network.

It is always a great temptation at this point for a systems analyst to create yet another model of the complete network and facilities which requires a tremendous computer capability that is not available to most areas, mainly because of finances, that would, without intervention, run to the optimum solution. This is not necessary and is detrimental to the process. Actual experience by the author has shown that the network alternatives to examine for the future are rather limited by comparison. The feasible solutions are bounded due to the physical, political, and socio-economic nature of the study area and the previously built systems. Many of the so called "possible" solutions are in reality unfeasible and are not available for evaluation. These must be identified and removed from the area of consideration.

The rest of this chapter is devoted to the process of identifying the "real" networks (actually, most water source systems are simply additive) based on these future demands. All of the concerned agencies must evaluate

the existing network and that which has already been programmed and identify which of these options are available. In other words, is a source, treatment plant, or pipeline that is not at capacity, available for other users? If it is available, for how long and at what cost? This then becomes another primary node for operational gaming intervention in this interstitial process. The group must reduce the network to a feasible condition.

After the network has been reduced to this "workable state", the group then decides what alternatives are to be analyzed. These alternatives are evaluated by a cost model. This process is done for each five year interval until the study period has been evaluated. This once through process becomes the "plan" for the area over that time interval. This process is extremely flexible for impact analysis. Most of the alternatives have already been evaluated, and very little effort and time has to be expended to update the plan.

5.2 Network Formulation

The network that will be formulated is a regional network. This network will vary greatly with each region but will be structured by political and corporate jurisdictions, sources, pipelines, treatment plants, storage facilities, etc. The region will be composed of several communities and metropolitan areas. Many of these political jurisdictions will have independent networks and some, mainly the metropolitan areas, will probably have an interconnected water system with several sources and treatment plants.

The object will be to formulate these varied networks into one system for the whole region. This does not imply that the whole region should be made into one interconnected network, although this usually is a desirable goal. It does imply that the whole region has to be formulated as one

problem and evaluated as a complete system.

The network consists, therefore, of all sources that are available to the region, although some of these may be some distance from this region. It also includes the necessary raw and fresh water storage facilities, treatment plants and the connecting lines that provide the transportation links for this water. It does not include the local networks, those inside of the corporate limits, that distribute the water to the user. These are evaluated using the procedures outlined in Appendix C, Water, Sewer, and Storm Drainage Micro Area Requirements (14). The formulation is for a system like that shown in Figures 5-1 and 5-2.

The first step is to formulate the current network out of the inventory data. This network is evaluated against the projected demand for the next five year interval. Next, the requirements are compared to the existing and programmed capabilities. This determines the actual network that will be under consideration. This is accomplished by the procedure detailed in the following paragraphs.

The existing facilities were evaluated in the inventory and analysis phase of the study. The forms used are shown in Appendix B (14). These forms were originally developed for the Indian Nations Council of Governments (INCOG). This data,plus the inventory of the sources and major pipelines both existing and those that are programmed within this five year time interval, provide the existing network, see Figure 5-1.

As can be seen from this figure, the sources, treatment plants, and pipelines for the existing and programmed network are identified. Each political jurisdiction that receives its water supply from a particular source is noted, and if it is from separate sources, the political juris-

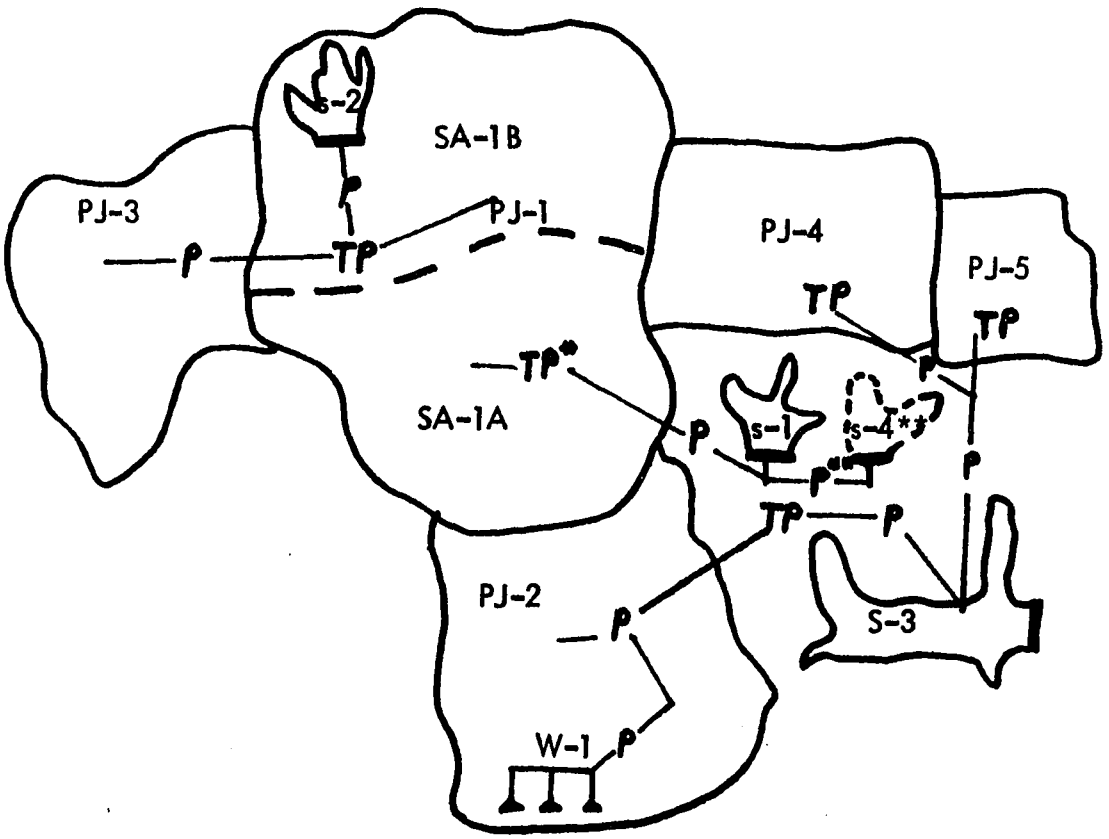

PJ - Political Jurisdictions
S - Water Source Surface
W - Water Source Subsurface
SA - Special Area of Political Jurisdiction
TP - Treatment Plant
* - Programmed for Expansion
** - Programmed New Facility

Figure 5-1. Existing Metropolitan Study Area.

diction is divided into special areas.

The capabilities, cost, and liabilities of each portion of the existing network have been identified. This established the existing network. The demand model is run with this existing network data to validate the model to this metropolitan area. If it is off for any area, the technical coefficients and equations should be revalidated.

At this point in the study procedure, the existing network has been evaluated and identified. It was then used to validate the coefficients in the demand model. This now allows the user agency to evaluate the first five year time interval for the study area.

The demand model is set for the network by coding each SAU to its proper group (political jurisdiction, sources, special area, treatment plant, etc.) that coincides to the existing network. The demand model is run for the next five-year interval for each alternative under consideration. The future land use of the existing area is coded into the same land use procedure as the current land use. The land use to be developed is added to the existing scheme as visualized by the user agency. It is also entered as a special area. This is done to preclude having to revaluate this area if it becomes incompatible with the existing network and needs to be supplied by an addition to the network. This is done for each of the future alternatives that the user agency wishes to explore. The option that the demand model has to evaluate the delta increase in water demand should also be run. This gives the increases and the new requirements as a separate output which makes evaluation of these networks easier.

After the run of the demand model and the inventory, the using agency now has enough data to evaluate the existing and programmed networks for time equal to plus five years.

The first step is to examine each source of water by each of the user codes. Can the existing and programmed sources take care of their respective users? The sources that can are noted and their excesses in capacity are evaluated. The sources that cannot take care of their future requirements are examined next, and the reason for the deficiency is evaluated. Has it reached full capacity because of growth of the old users alone or because of growth and new development? If it is because of new development then this new area is examined as a special area requiring a new source. The old area is then checked to see if it can be handled by the old source. The deficiency or excess is noted and recorded.

The source data is then compiled for the study area. The excess of water by each source is evaluated first. The controlling agency is contacted to determine if the excess is available for use in other areas. If it is being held in reserve and is not available, then it is removed from the excess roles. If it is available, then the cost per million gallons, amount available, and duration of the availability are determined. The above procedure includes those sources which have already been programmed for completion prior to the end of this five-year interval.

The second step is to evaluate the treatment facilities and their capabilities. The procedure is very much the same as that of the sources as far as identifying the excesses and deficiencies. The exceptions to the above procedures are the evaluations of the treatment plants themselves. Each plant that has a deficiency has to be examined individually. Can the plant be expanded to a capability that would take care of the needed water supply? This decision is based on the current condition of that facility. We must carefully examine the expansion of a facility versus the construction of a new one.

The final step is the evaluation of the pumping and pipeline facilities that interconnect the sources, treatment plants and the user networks. Again these facilities are evaluated for their excesses, deficiencies, and availabilities. The procedure is the same as that described above for the sources and treatment plants. The completion of this phase concludes the information needed for the network formulation.

The next phase of the network formulation is to set this data down on a map or a tabulation that can be easily understood (see Figure 5-2). This then gives the planning agency its first real look at the future requirements. Above all else, it has reduced the problem to the actual network that needs to be evaluated. Rather than a maze of plants, pipelines, pumping stations, etc., the user agency now has a mapping of the actual problem with which the agency is faced. This rather simplified version of the problem can be easily visualized and explained to all other concerned agencies.

As shown in Figure 5-2, the study area, this being one of the future alternatives under consideration, has the new political jurisdiction and special area boundaries shown for the inclusion of the projected growth. The special areas, old and new, and political jurisdictions that have deficiencies have been identified and their deficiencies noted. The facilities that do not have adequate capacity are also shown. This then becomes the requirements for the time interval under study.

The process is repeated for each new increment of time until the complete study period has been evaluated. This procedure gives the user agency an incremental analysis of the excesses and deficiencies of the study area for the "desired" alternative. The accumulation of the future data for the formulation of this desired network is now complete. If there is more than

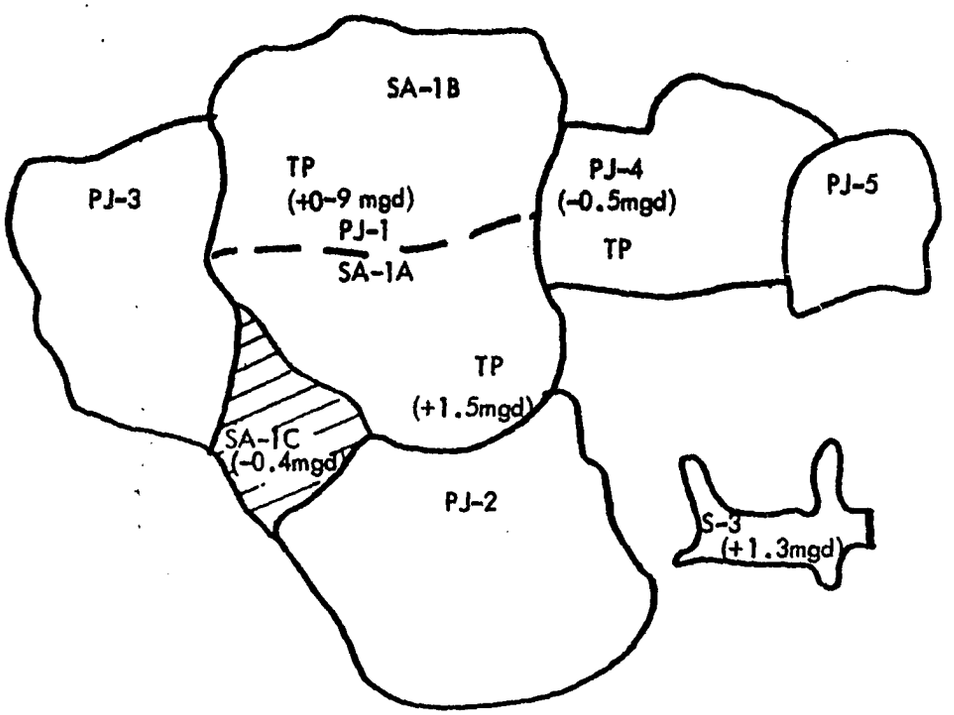

Excesses

1. Source 3 - 1.3 mgd
2. TP (SA-1A) - 1.5 mgd*
3. TP (SA-1B) - 0.9 mgd*

Deficiencies

1. TP (PJ-4) - 0.5 mgd
2. SA-16 - 0.4 mgd

* Available for PJ-1 only

New Special Area

Figure 5-2. Future Requirements.

one "desired world" that is to be analyzed, then the process is repeated for each alternative in turn.

It was at this point that, for each "desired world", the author found it beneficial to group this data into individual categories. This made it easier to present to the Council of Governments for selection of the network alternatives that will be modeled for the final plan selection. It was determined that for each political jurisdiction, source, treatment plant, and storage facility, an individual data sheet for these categorical increments gave a much clearer picture of the excesses and deficiencies, expecially when accompanied by each individual mapping of category (See page 96). (Norman is used as an example, since it is one political jurisdiction in ACOG and is currently one of the independent networks within the system.)

It can easily be seen from this data sheet that Norman's water supply is adequate until the period 1985-1990. Since Norman is blessed with an adequate groundwater supply of exceptional quality, this requirement can easily be met by the development of approximately six new wells. The treatment plant, on the other hand, will be at full capacity shortly before 1985. The treatment plant at Norman is new and has the built-in capability to be easily expanded to double its present capacity of 6. MGD.

Since the groundwater supply requires no treatment and is added directly to the water network and Thunderbird's capacity is only 8.55 MGD, then the actual needed capacity for treatment is 2.55 MGD. This can be accomplished by increasing the capacity of the plant by only 50%. This procedure gives a good picture of the water requirements and possible solutions for the political jurisdiction of Norman. The process is repeated for all other groupings to be analyzed.

WATER - EXCESSES AND DEFICIENCIES FOR NORMAN					
	Time Intervals				
	1970	1975	1980	1985	1990
POPULATION	52,117	59,500	68,000	76,500	87,000
Water Usage-GPCD***	118	120	124	129	137
Water Usage-MGD	6.15	7.14	8.43	9.87	11.92
Industrial Water Usage-MGD	1.65	7.42	3.81	5.47	7.12
Total USAGE MGD	7.80	9.56	12.24	25.34	19.04
SOURCE					
Thunderbird Lake AVG-MGD	8.55	8.55	8.55	8.55	8.55
Ground supply* AVG-MGD	30 wells** 9.00	30 wells 9.00	30 wells 9.00	30 wells 9.00	30 wells 9.00
Total MGD	17.55	17.55	17.55	17.55	17.55
Excess/Deficiency MGD	9.75	7.99	5.31	2.21	-1.49
Treatment plant-MGD	6.0	6.0	6.0	6.0	6.0
Excess/Deficiency-MGD	up to 6.0	up to 5.44	up to 2.76	-6.34	-2.55

* Ground supply requires no treatment other than chloriration.

** Avg. yield = 0.30 MGD/well

*** Maximum Daily Demand

Water - Excesses and Deficiencies for Norman

It must be pointed out that many of the water networks in a metropolitan area are independent and are not interconnected. The interconnection of all the networks into a regional system that serves the metropolitan area is a desirable goal and greatly helps the study area in meeting future water needs, as well as providing for emergency flows. This goal is usually difficult to meet due to the political and socio-economical nature of the system.

This fact allows the using agency to develop a future plan for much, if not all, of the networks based on a simple cost analysis of the few alternatives of each network without using any computerized network model. Due to the nature of these network models, as much of the analysis of the future alternatives should be accomplished by this procedure as possible.

This concludes the section on network formulation. After this procedure has been carried out for the study area, the user agency should have a complete understanding of the networks, their requirements, and the alternatives that are feasible. The agency also will have reduced the problem to the simplest version possible and will now be ready to present it to the committee of concerned agencies for final selection of the alternatives that are to be finalized.

5.3 Model Description

Using the term "model" for the next phase of this study is, in a sense, a misnomer. The step is actually made up of a set of alternatives based upon the network under consideration. The "model" may be as simple as applying derived cost functions or the use of a computerized model for the determination of the useful permutations of the network. These permutations are then used with the cost functions to derive the possible networks. A review of literature

has failed to reveal any model that can effectively handle this phase of the problem on a general basis. It does not seem possible that a general "model" can be developed for the user agencies. One that can be easily understood, run, and not require larger computer capabilities than are generally available is desirable.

There are available a wide assortment of linear programs for a network analysis. The one that has had the greatest success with our requirements is the Fulkerson's out-of-kilter algorithm and several of its variations (21, 22). These variations will be covered later in this section along with their capabilities and restrictions.

After the completion of the model intervention by the committee of concerned agencies, which has resolved the networks down to the alternatives that they wish to consider, the process of network analysis is begun. The first step is to identify all of the independent networks and their alternatives. These are simple in nature and require analysis by standard engineering procedures. As used in Section 4.2, Norman, Oklahoma, is such a system.

This network is independent of the metropolitan area and has the capability, within the time frame of this study, of fulfilling its future requirements without the creation of new sources or new treatment plants. Although, when the demand reaches 24.5 MGD, new sources will have to be located somewhere between years 1995 and 2000. Depending upon the quality and type of source, a treatment plant will also be needed.

All networks that fall into this category are analyzed using a procedure that applies the derived cost functions to each of the possible alternatives. The cost functions used in this portion were derived by C. R. Bartone (20). The application of these cost functions on the independent networks constitutes the "model" for this portion of the study.

The "model" consists of the employment of the different types of cost functions that are incurred in the development of water supplies. Basically they can be categorized into four components:

1. Water source costs for either surface or groundwater which include costs for reservoirs, stream diversions and well fields.

2. Transmission costs which include costs for pumping stations and pipelines used to convey the water from its source to the area of use.

3. Treatment costs which include costs for raw water storage, treatment plants and pumping plants.

4. Distribution costs, which include costs for pumping stations, storage tanks and water mains.

In this study each of these costs has been analyzed and estimated. In general the costs are broken down into capital expenditures and operation and maintenance costs. Capital expenditures include costs for engineering design, land and right-of-way, water rights, construction, administration and financing. Operation and maintenance costs include labor, materials administration and overheads, chemicals and power. In some cases chemical and/or power costs are shown separately.

Capital costs are presented as equivalent annual costs using an interest rate of 6 per cent and a period of 25 years. Operation and maintenance costs are presented as annual costs. Both costs are presented in 1970 dollars. Adjustment to a new base year is accomplished by use of the Engineering News-Record Building Cost Index 5 for the Southwest region (Dallas)(24).

The cost data was obtained from previous studies of generalized costs for water supply systems by the Tulsa Metropolitan Area Planning Commission (25), Black and Veatch (26), and Dawes (27).

It should be recognized that the cost estimating procedures provided here are only valid for making preliminary comparisons and serve only to measure costs to a degree which will assist in evaluating planning alternatives. Cost estimates derived by these procedures should not be used in actual facilities design since they should not take the place of detailed engineering estimates for specific projects. Cost equations are valid for facilities based on use rates from 0.1 to 100 million gallons per day. For use rates in excess of 100 MGD proportionate increases in cost estimates are suggested (26).

The cost estimating procedures applicable to this model are described below. Note that all costs given are unit annual costs and to arrive at the total annual costs it is necessary to multiply by a design capacity variable. Design capacities of future facilities are always intended to be the capacities required based on water requirements at the end of the design period, i.e., the long range forecasts.

5.3.1 Water Source Costs

Unit capital costs for impounding reservoirs, including intake and pumping station, are given by

$$C_R = 74.2\ X_R^{-.38} \qquad (26)$$

where, C_R = annual unit costs of impounding reservoirs in thousands of dollars per billion gallons.

X_R = design capacity of reservoir in billion gallons.

The minimum design capacity of future reservoirs will be that capacity capable of supplying the total average daily water requirements for all users

of the reservoir.

For well development the equivalent annual costs are $2,780 per MGD capacity (26). This figure includes the development of the entire well field and should be equal to the maximum daily requirement of the user.

Natural supplies, such as lakes and rivers, require only an intake and pumping station. The capital costs for these facilities are given by

$$C_R = 3.95\ X_S^{-.178} \tag{26}$$

where, C_R = equivalent annual unit cost in thousand of dollars per MGD.

X_S = design capacity in MGD.

The design capacity is based on the maximum daily water requirement of the user.

Operation and maintenance costs, exclusive of pumping power, are $7.75 per million gallons produced (26) regardless of source. To arrive at an annual production multiply the average daily use by 365. Power costs are $5.24 per million gallons produced per 100 feet of head (26). Head requirements for wells are taken at 400 feet, and for surface supplies 100 feet of head is required. Again, a multiplier of 365 should be used to get annual production.

Finally, associated with each individual source there may be a water rights cost. This cost should be ascertained separately by a review of legal agreements and local practices. The cost will generally be expressed in dollars per million gallons used where the amount of total use is 365 times the average daily use.

5.3.2 Transmission Costs

Equivalent annual cost for capital investment in pipelines is given by

$$C_P = 41.3\ X_P^{-.49} \qquad (25)$$

where, C_P = equivalent annual cost for pipelines in thousands of dollars per mile per MGD.

X_P = pipeline design capacity in MGD.

Pipeline design capacity is based on the maximum daily water requirement of the user. Note that the use of this cost equation for estimating pipeline costs requires an estimate of pipeline distance in miles. This is generally taken as the straight line distance between source intake point and the water treatment plant or discharge point.

Not included in the above capital costs is the cost of right-of-way for pipelines. An average cost figure for right-of-way is $3200 per mile (26). Amortizing this and reducing it to an equivalent annual cost yields $247 per mile per year. This is a fixed cost, and it should not be included in this equation since it is independent of design capacity.

Annual operation and maintenance costs for pipelines can be expressed as

$$A_P = 1.32\ X_P'^{-.49} \qquad (25)$$

where, A_P = annual operation and maintenance cost in thousands of dollars per mile per MGD of flow.

X_P' = pipeline utilization level in MGD.

Note that the annual operating level and not the design capacity determines costs in this instance. These will be different except at the end of the design period.

Pumping station costs are dependent upon the number of pumping stations located along the pipeline. To arrive at this number both the available head and friction losses must be taken into account. Friction losses are assumed to be 4 feet per 1,000 feet of pipe. Available head is the difference in elevation between the intake and discharge points. Positive head, by convention, will mean that the intake is higher than the discharge point. Letting

h_f = elevation difference between intake and discharge points in feet.

d = distance between intake and discharge points in thousand feet.

Then if $h_f - 4d \geq 0$, there is enough head available to overcome friction losses and gravity flow will suffice (i.e. no pumping stations are needed). If $h_f - 4d \leq 0$ the number of pumping stations required is

$$n = \frac{h_f - 4d}{400}$$

rounded to the next higher whole number.

The unit capital cost for each pumping station is given by

$$C_n = 6.65\ X_p^{-.314} \qquad (26)$$

where, C_n = equivalent annual unit cost of pumping stations in thousands dollars per station per MGD.

X_p = design capacity of pipeline.

Annual operation and maintenance costs for pumping stations are given by

$$A_n = 2.12\ X_p'^{-.314} \qquad (26)$$

where, A_n = annual operation and maintenance cost in thousands of dollars per station per MGD of flow.

X_p' = pipeline flow level in MGD.

In addition to the operation and maintenance costs, the cost of pumping power must be included. As already stated pumping power is priced at $5.37 per million gallons of flow per hundred feet of head. The head requirements will be $\left|h_f - 4d\right|$ as defined above where $h_f - 4d < 0$. The annual flow is $365\ X_p'$.

5.3.3 Treatment Costs

To assure a reliable supply of water, raw water storage at the discharge end of the pipeline may be provided.

The capital cost for raw water storage is

$$C_{rs} = 1.55\ X_{rs}^{-.201} \qquad (26)$$

where, C_{rs} = equivalent annual unit costs for raw water storage in thousands of dollars per million gallons.

X_{rs} = Raw water storage design capacity in million gallons.

The design capacity for reliable supply should be ten times the average daily requirement. For pipelines of less than 5 miles length this capacity can be reduced proportionately.

The operation and maintenance costs for raw water storage are

$$A_{rs} = 0.10\ X_{rs}^{-.201} \qquad (26)$$

where, A_{rs} = annual operation and maintenance cost in thousands of dollars per million gallons.

Treatment plant costs include the costs of the treatment plant and treated water pumping plant. Unit capital costs are given by

$$C_T = 25.6\ X_T^{-.257} \qquad (25)$$

where, C_T = equivalent annual unit cost of treatment plant in thousands of dollars per MGD.

X_T = design capacity of treatment plant in MGD.

The design capacity is based on the maximum daily water requirement of the user.

Operation and maintenance costs of the treatment plant, exclusive of chemical and power costs, are given by

$$A_T = 7.25\ X_T'^{-.257} \qquad (25)$$

where, A_T = annual operation and maintenance of treatment plant in thousands of dollars per MGD.

X_T' = operating level of plant in MGD.

The operating level of the treatment plant is based on the average daily requirements for the year of operation.

Chemical costs vary widely depending on the quality of the source water. Therefore, these costs should be determined individually for each source. This can most easily be done by preparing a schedule showing costs versus water quality by type of use. These costs should be given in dollars per million gallons treated where the total amount of treated water will be $365\ X_T'$.

5.3.4 Distribution Costs

Treated water storage requires a capital investment of

$$C_{ts} = 14.3\ X_{ts}^{-.274} \tag{26}$$

where, C_{ts} = equivalent annual unit cost for treated water storage in thousands of dollars per million gallons.

X_{ts} = design capacity of treated water storage facilities in million gallons.

The design capacity is estimated as 25 per cent of the maximum daily use. Operation and maintenance costs for treated water storage are given by

$$A_{ts} = 1.80\ X_{ts}^{-.274}$$

where, A_{ts} = annual operation and maintenance costs in thousands of dollars per million gallons

The distribution system network costs can be estimated at $800,000 to $1,000,000 per square mile of development. Distribution pumping power requirements assume a head of 250 feet, thus the power costs are $14.50 per million gallons of flow, and the total flow is 365 times the average daily flow.

5.3.5 Total Costs

Using the above cost data, the annual total of any water supply systems for any use can be estimated in 1970 dollars. It should be recognized that each system will have its own special requirements, so that no generalized total cost equations will be attempted. For example, one town may develop a surface supply requiring treatment while an industry may develop its own well water sources requiring no treatment. For each identifiable future

water use an individual total annual cost can be developed by the above-described procedures.

The cost data shown here demonstrate the effect of economies of scale on water system development. As the size of the system increases, the level of service is improved, and the unit cost of providing that service is reduced - a fact verified by the negative exponents on design capacity terms in the various unit cost equations. Water systems have long lives and require large capital investments, two factors that make consideration of scale economies imperative.

With the total costs of each alternative in the independent networks now derived, the decision as to the best alternative can now be made by the committee of concerned agencies. This then concludes the "model" of independent networks.

The next step is much more complicated by comparison (see flow charts at the end of this section). This is the examination of the networks that are interconnected form multiple sources and treatment plants. The formulation of a model to accomplish this task was derived from the basic description of the out-of-kilter algorithm by Fulkerson (26). This method was then developed into a program by R. J. Clasen (29). The basic description of this model can be reviewed in these publications if a detailed analysis is required.

This model was then altered so that it can handle both sewer and water networks. The model is the same for both networks and will be used again in Chapter VI for the analysis of sewer networks. This was done to simplify the modeling requirements of this study and has proved to be adequate for planning purposes. It was also done when studies revealed that true cost

functions are not linear. In fact, they are usually functions, if they can truly be derived, that are of a high order. It was then determined that the cost functions be disaggregated and simplified to linear functions that would give good approximations. This would allow a program to be run that was relatively simple and would derive the feasible permutations which could be analyzed in detail.

The model starts with a "super source", which is basically the environment, and feeds the water sources that supply the network. These sources are the first series of nodes. Since each node can be interconnected with one or more arcs, the cost functions can be disaggregated by the user. This is accomplished by determining the fixed cost, the cost incurred by the using agency no matter whether the facility is used or not, and assigning a flow of 1 MGD to this arc.

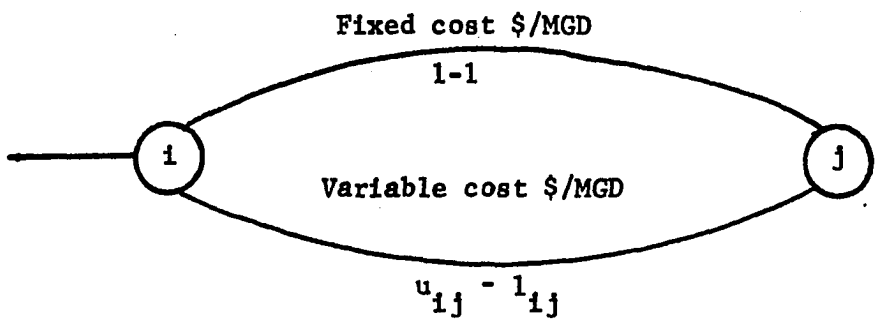

In other words, the fixed costs of a link in the network are assigned to an arc that connects the two nodes which denote the entrance and exit of that facility. Then a flow of 1 MGD is assigned as the upper and lower limits.

These "1 MGD fake flows" have to be added to the "super source" link for each arc of fixed costs that are assigned to the network. They must also be balanced in the network starting with the "super sink" and working backwards to the "super source".

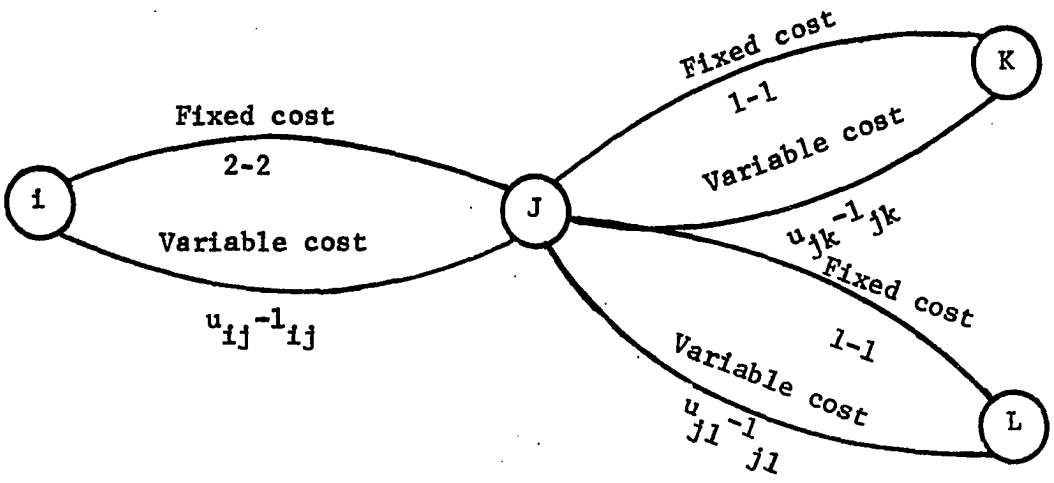

The variable costs, which are linear in this model, are then assigned to another arc that describes the facility and the proper upper and lower bounds are also designated. By using this technique, the cost functions can be closely approximated for each link.

The network is made up of a system of nodes and arcs that are interconnected by arcs. Each node represents an intake or exhaust of some facilities. Depending on the degree of accuracy needed, computer capabilities and available cost data, this network can be as detailed as needed. An arc-node grouping can represent a complete treatment plant or each of the steps

through the plant. The usual procedure is to simplify the network as much as possible, depending primarily on cost data, for the initial runs. When flows have been determined, then unfeasible or undesirable permutations of the network can be removed and new networks in detail can be derived and run.

By following this basic procedure, a very good flow and costing analysis can be run on any type of network. This procedure may even be enhanced by using some new techniques like those developed by H. A. Reeder and Dr. P. A. Jensen, who developed a version that uses a convex cost function in the program (30). The capabilities of this technique are only limited by the versatility and imagination of the user. The flow charts are presented in Tables 5-1 through 5-15.

TABLE 5-1. MAIN

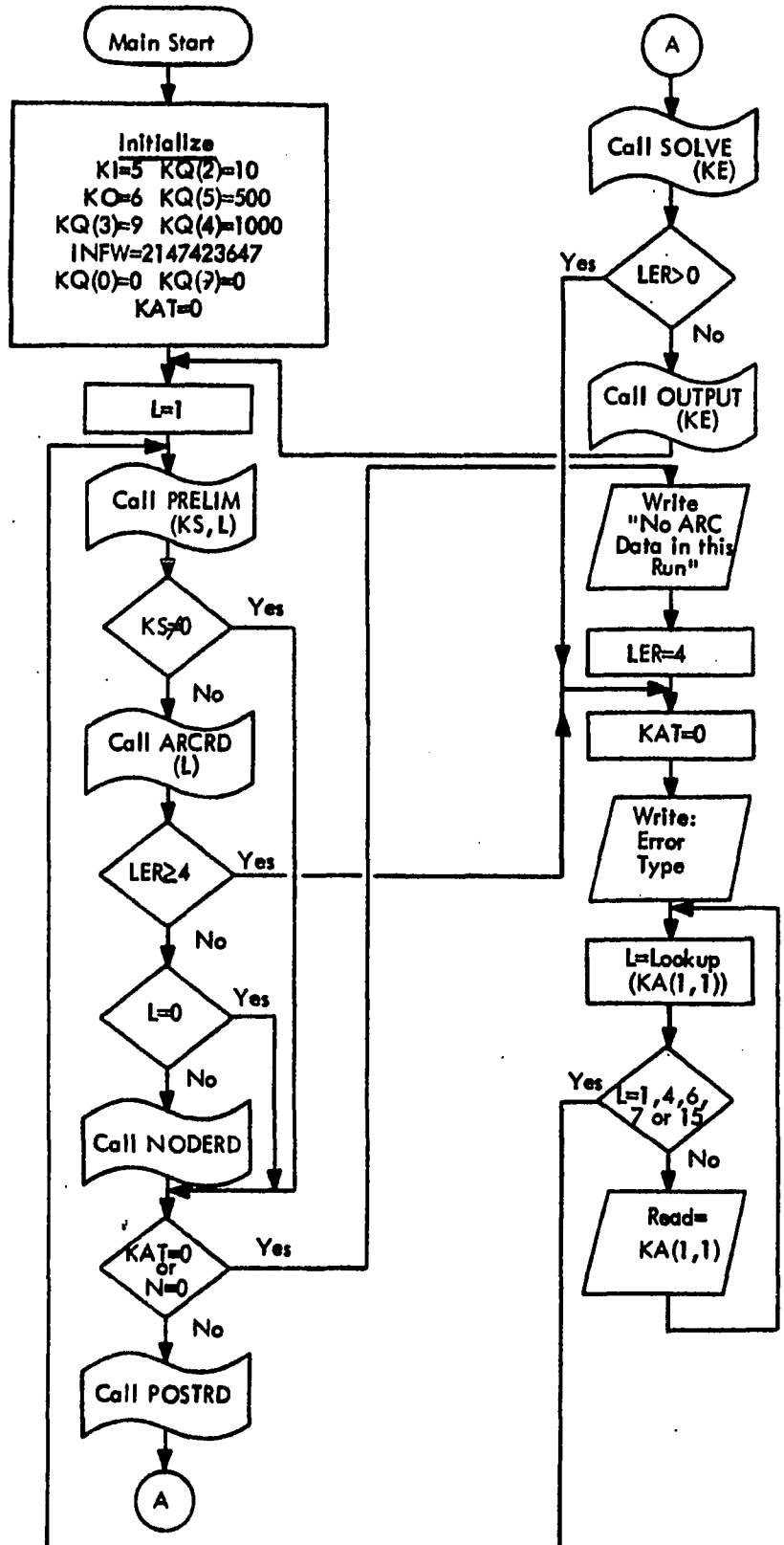

TABLE 5-2. SUBROUTINE PRELIM

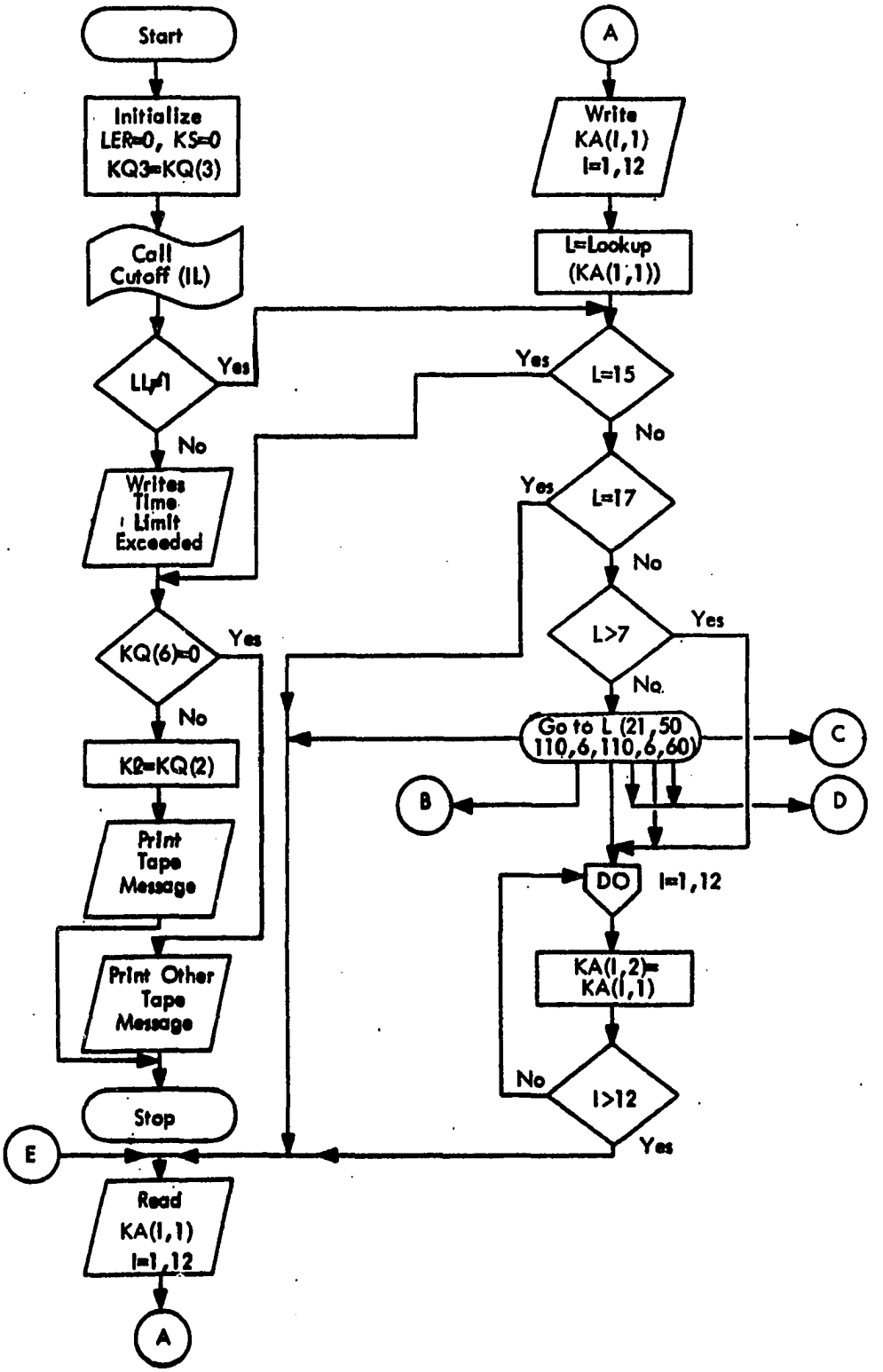

TABLE 5-2. SUBROUTINE PRELIM (Cont.)

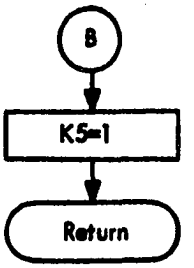

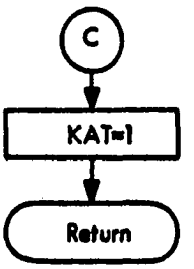

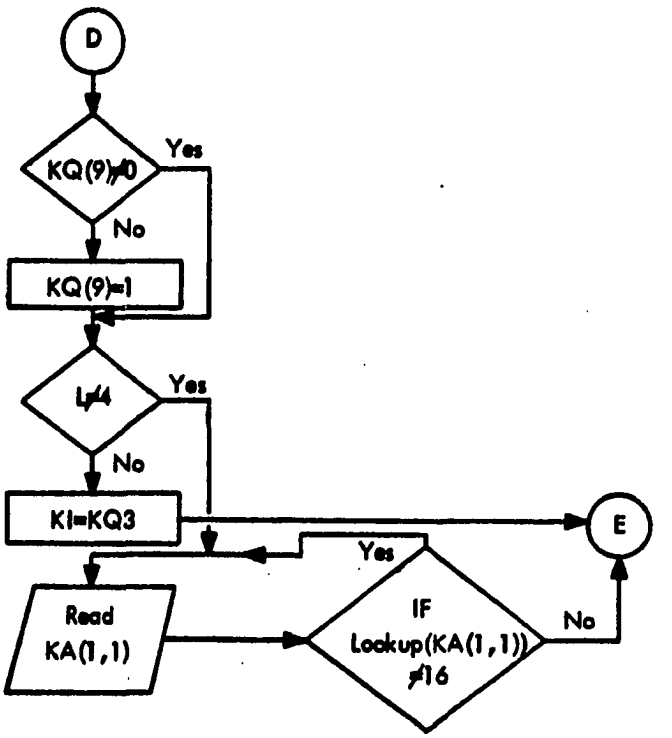

TABLE 5-3. SUBROUTINE CUTOFF

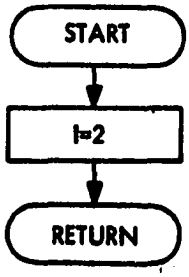

TABLE 5-4. SUBROUTINE ARCRD

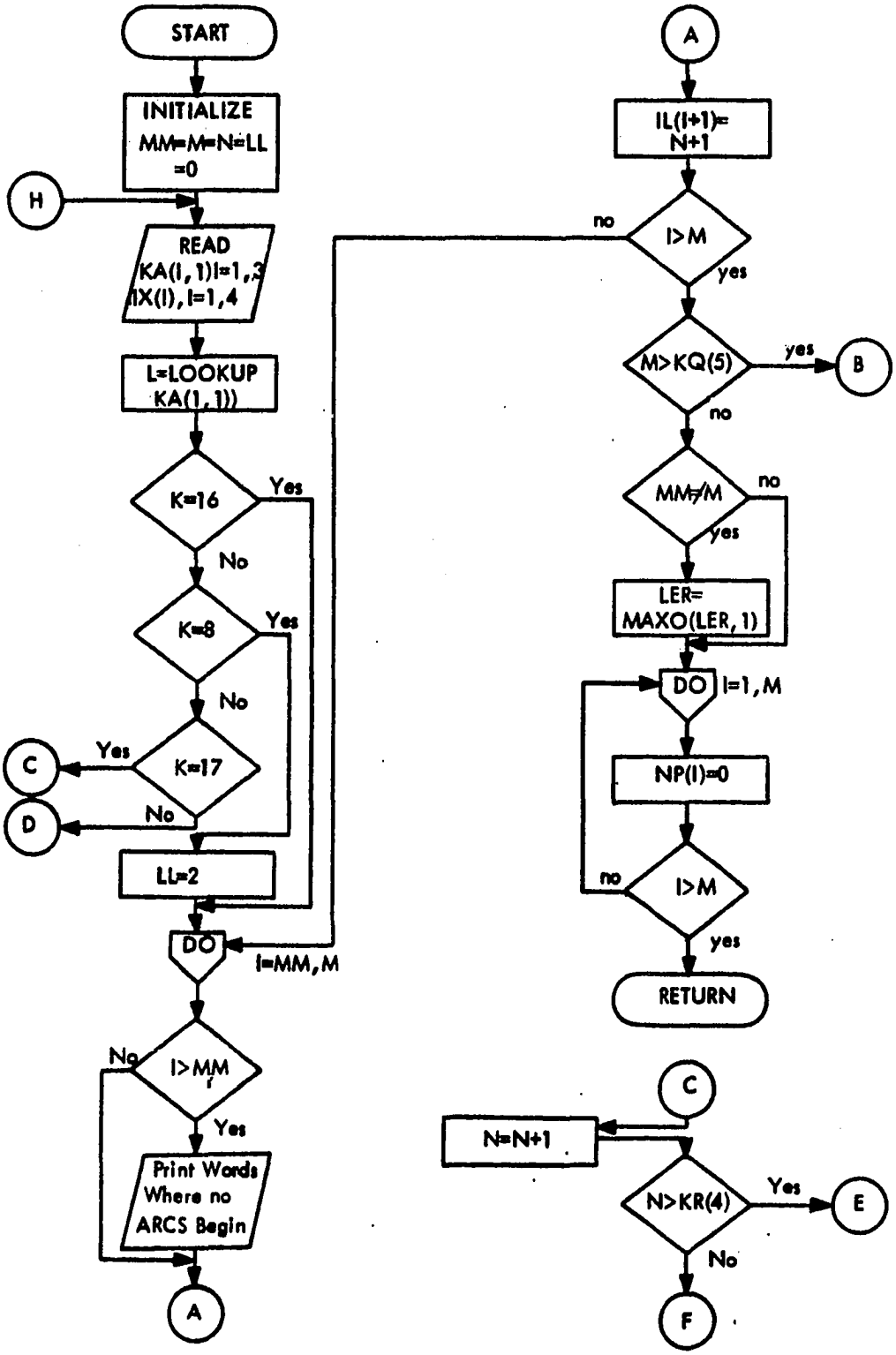

TABLE 5-4. SUBROUTINE ARCRD (Cont.)

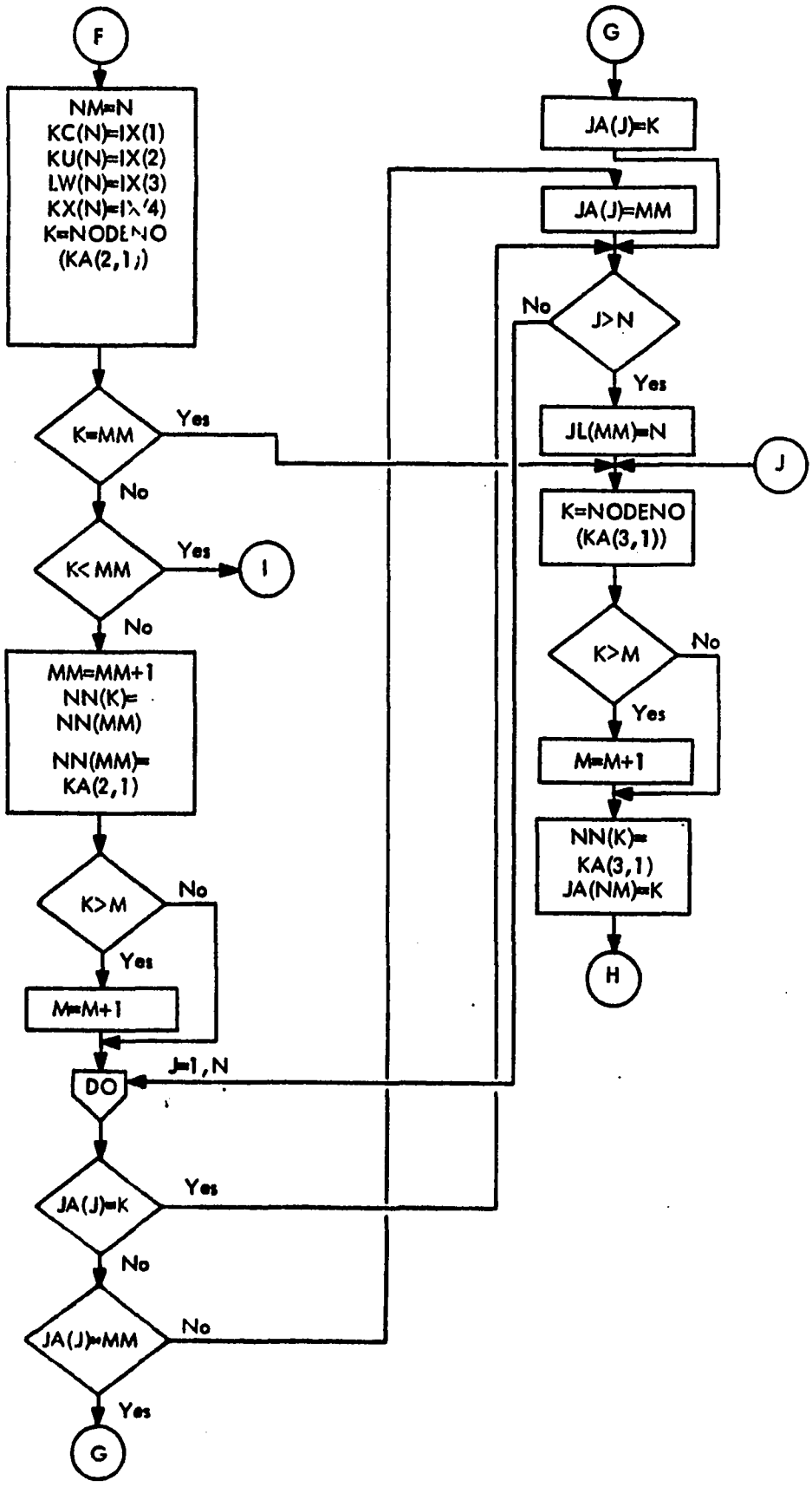

TABLE 5-4. SUBROUTINE ARCRD (Cont.)

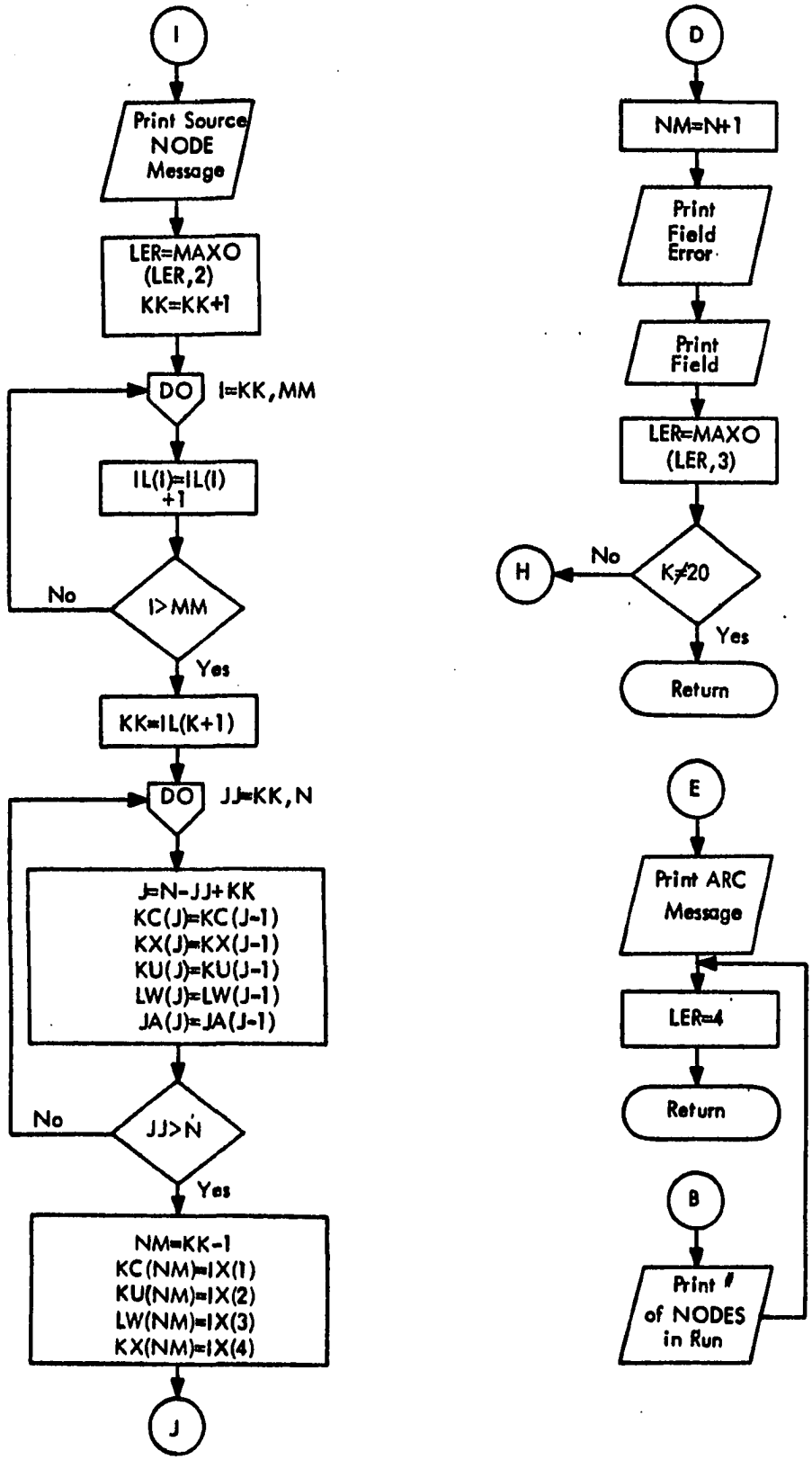

TABLE 5-5. SUBROUTINE NODERD

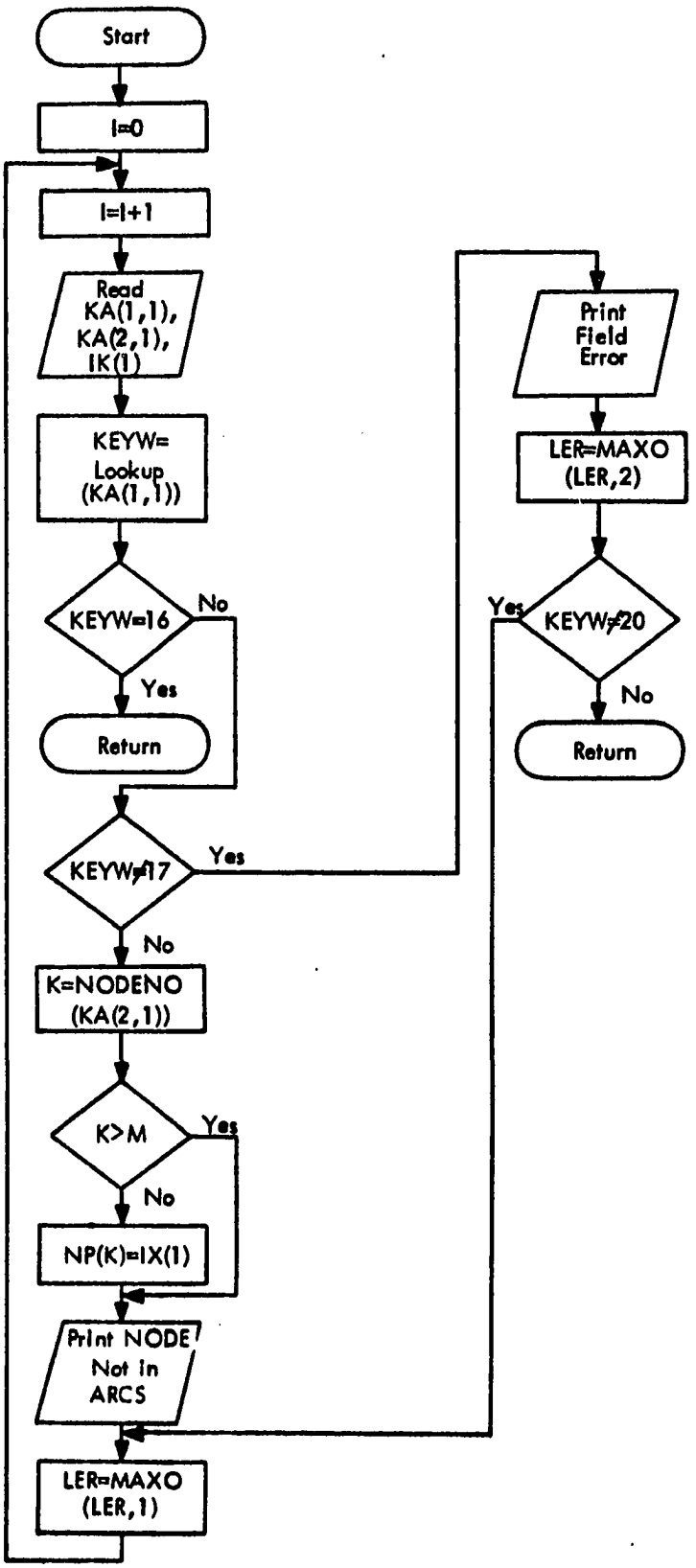

TABLE 5-6. SUBROUTINE POSTRD

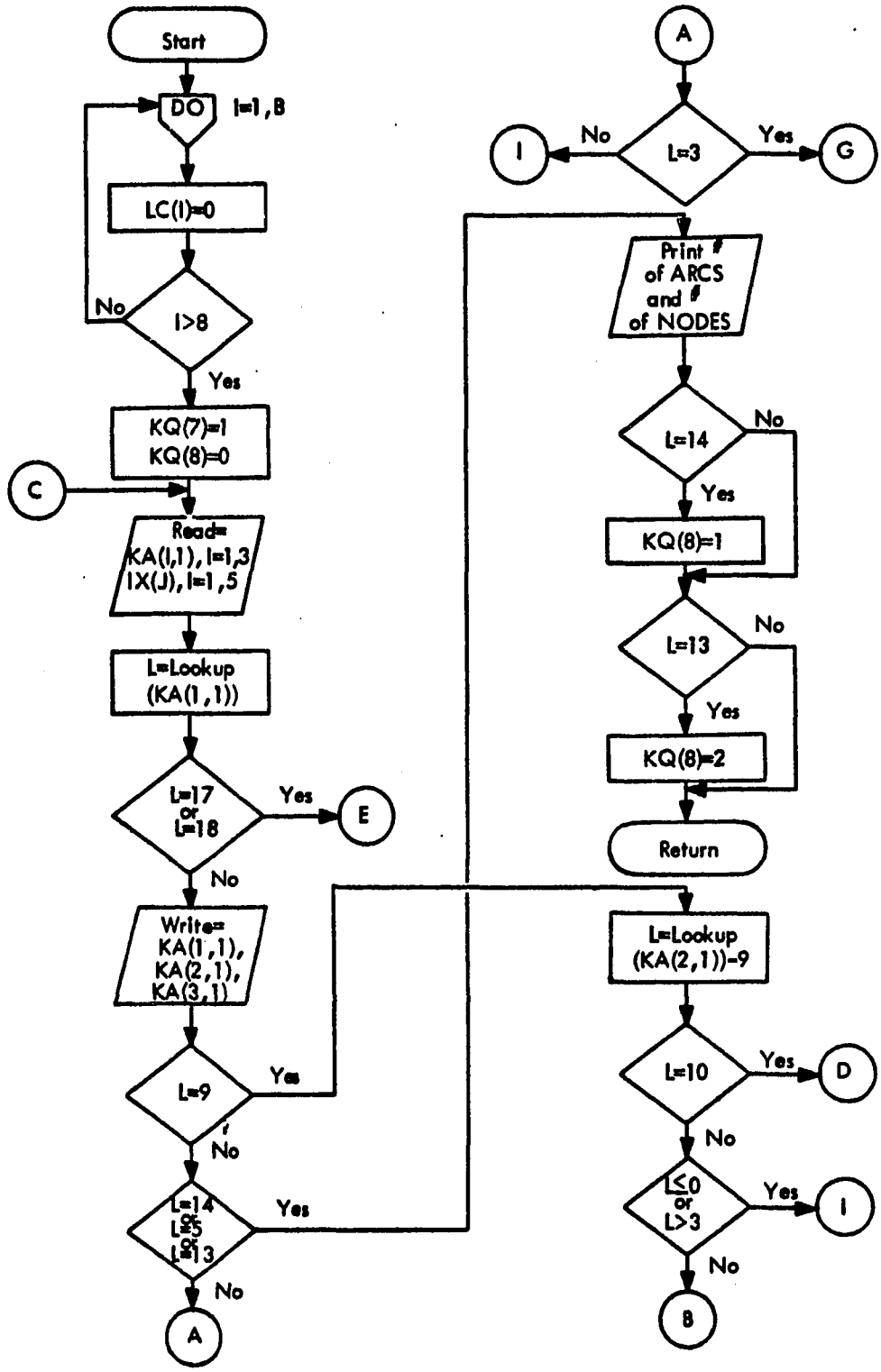

TABLE 5-6. SUBROUTINE POSTRD (Cont.)

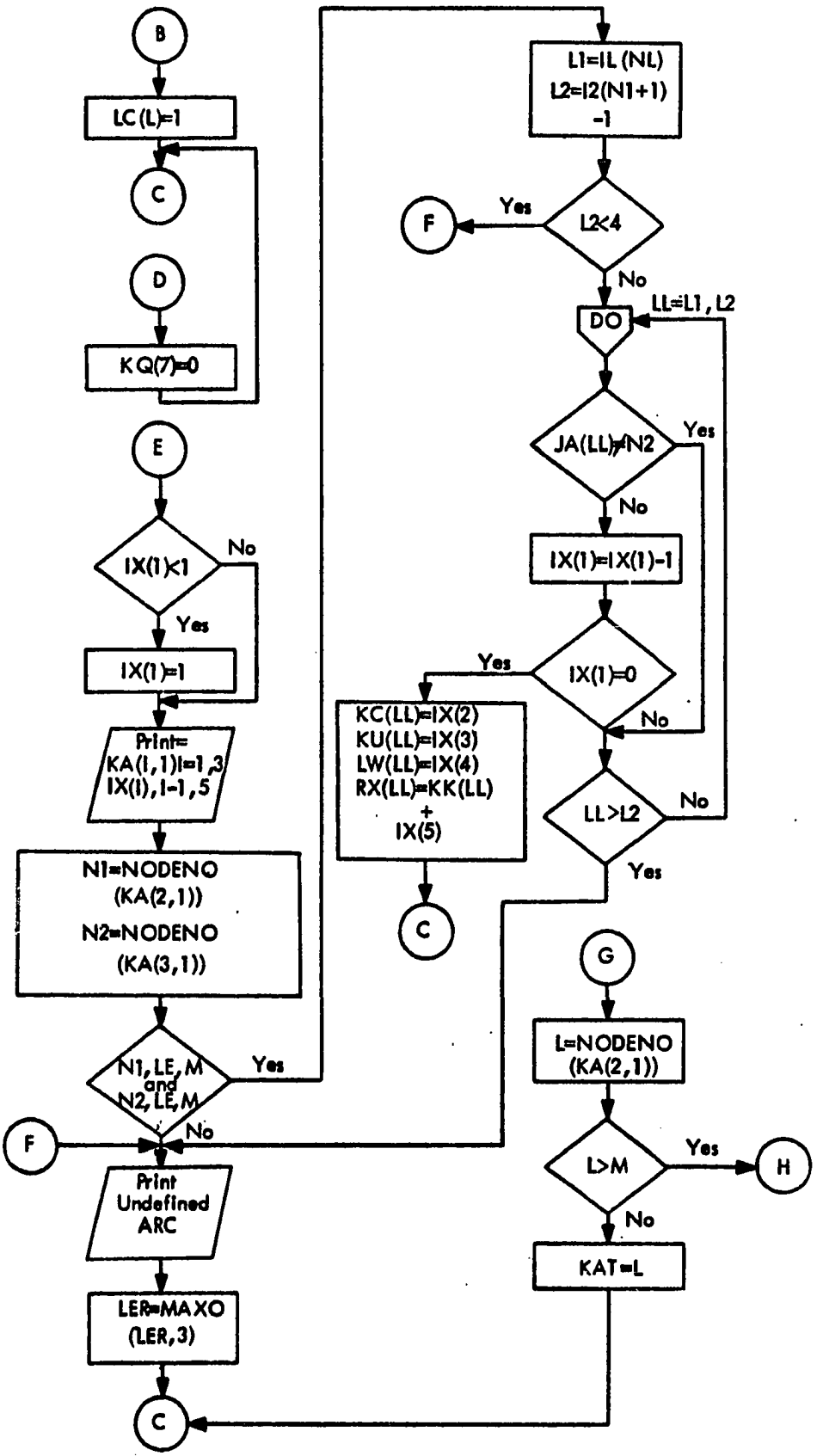

TABLE 5-6. SUBROUTINE POSTRD (Cont.)

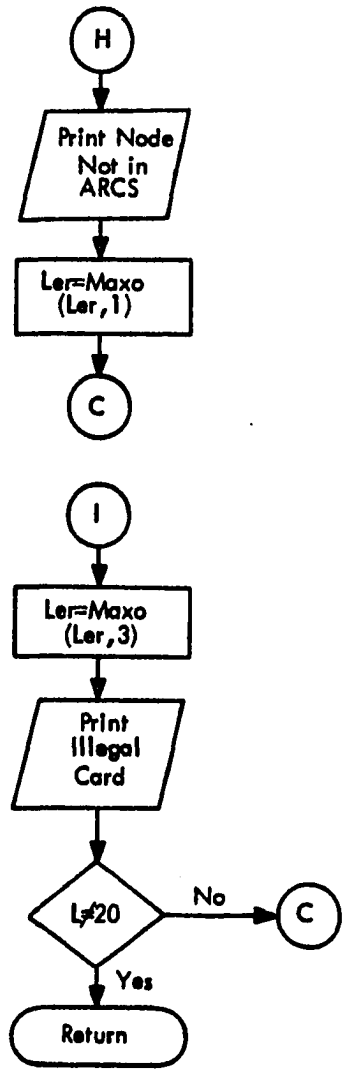

TABLE 5-7. SUBROUTINE SOLVE

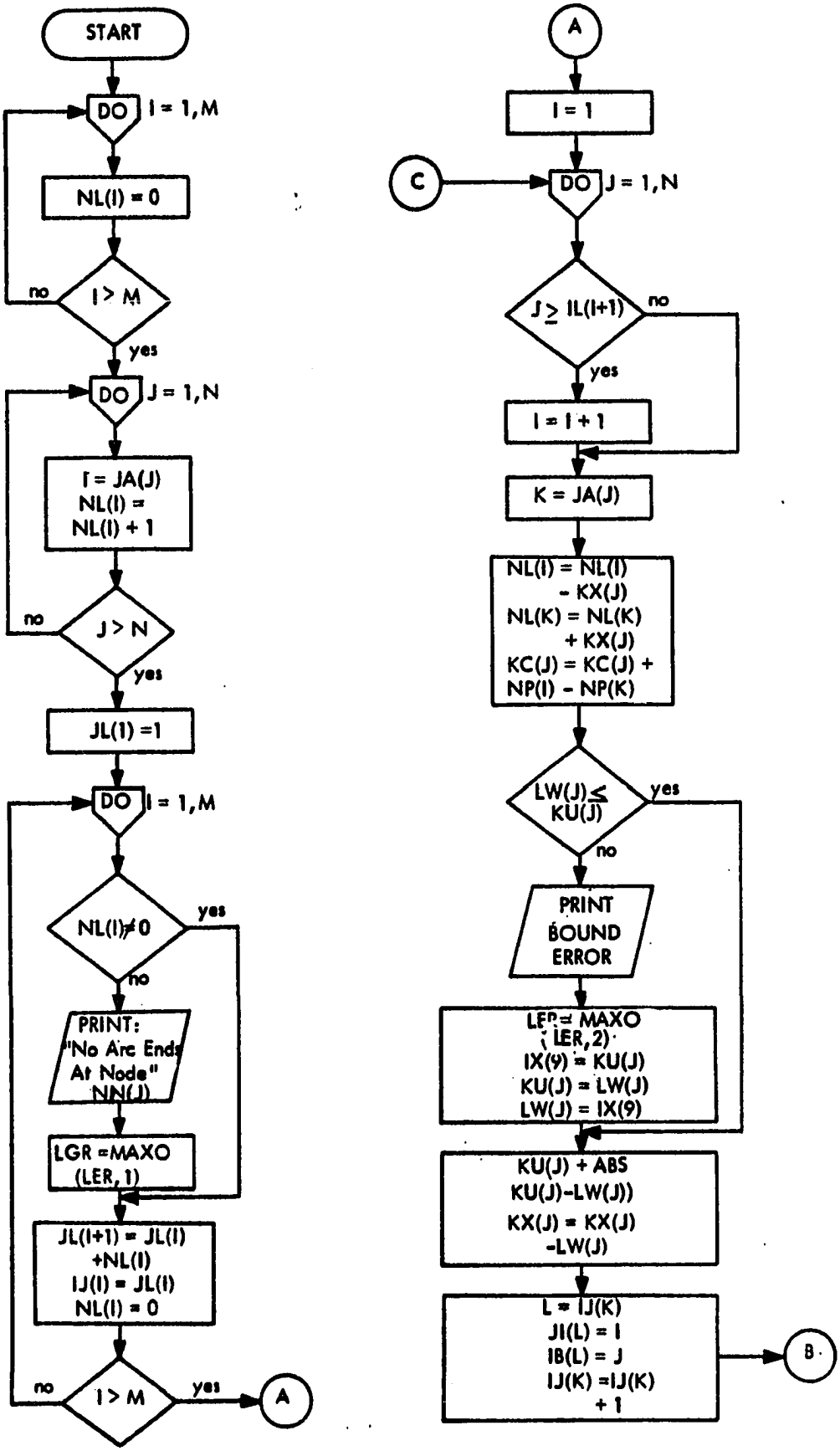

TABLE 5-7. SUBROUTINE SOLVE (Cont.)

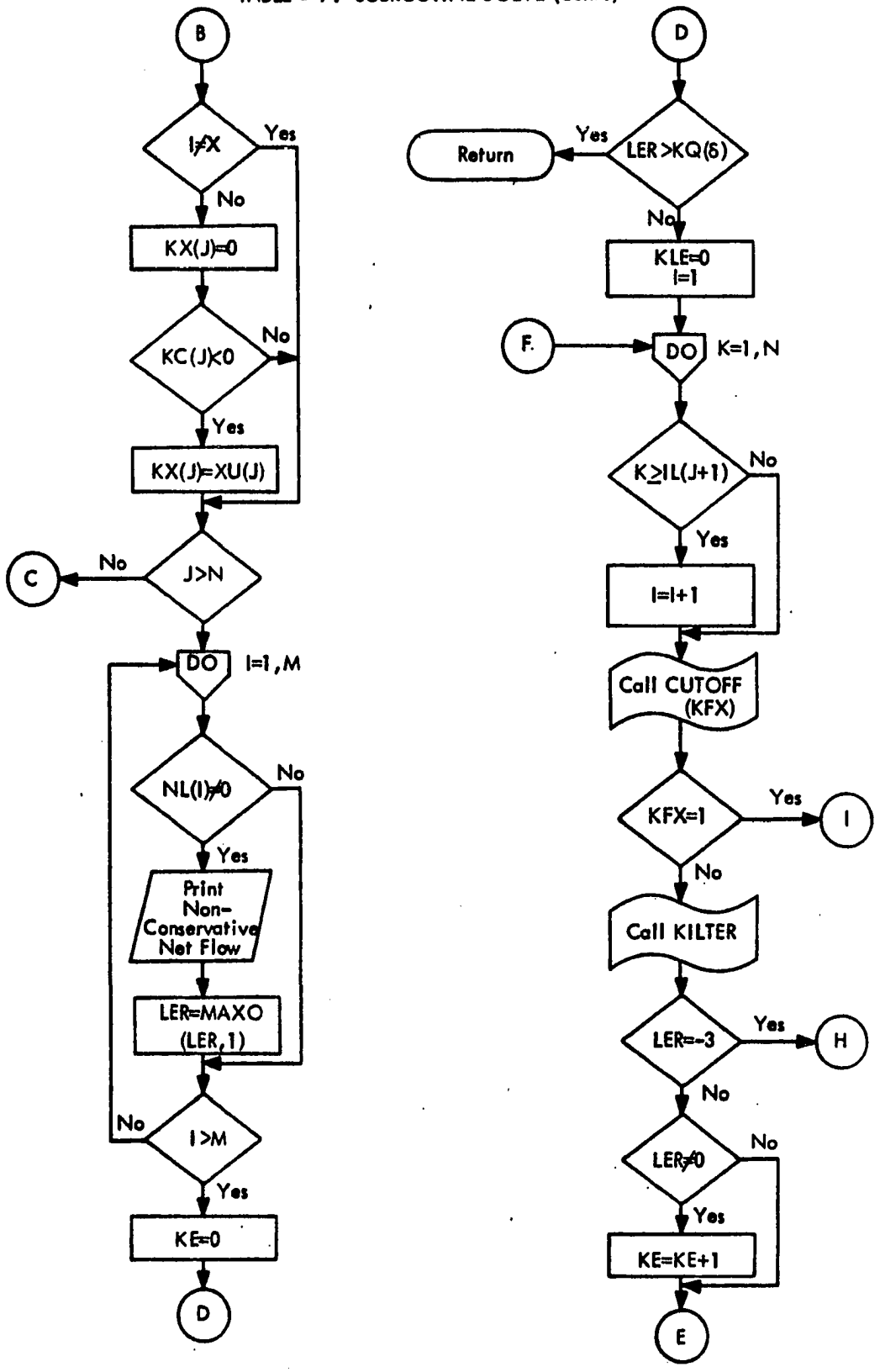

TABLE 5-7. SUBROUTINE SOLVE (Cont.)

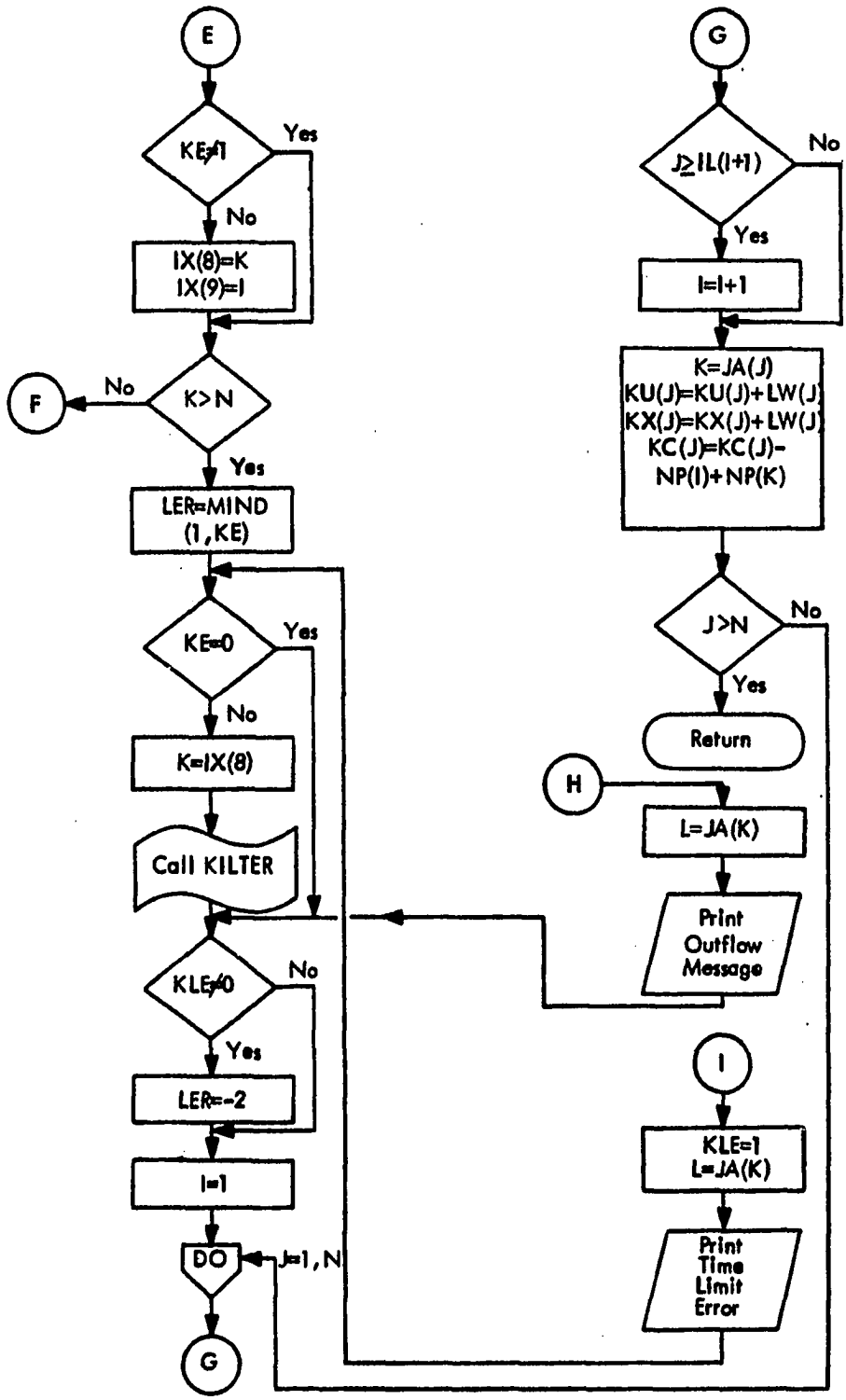

TABLE 5-8. SUBROUTINE KILTER

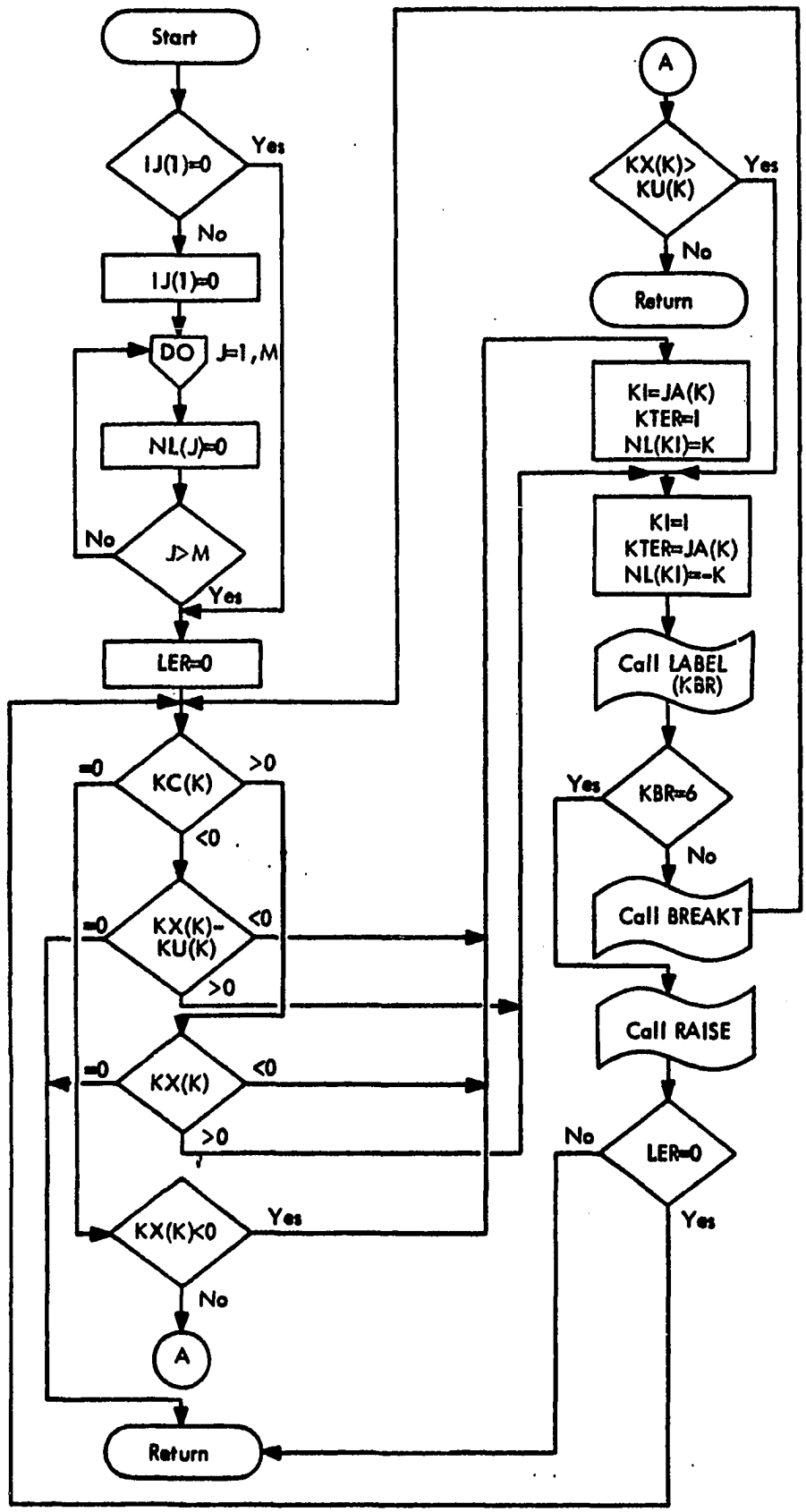

TABLE 5-9. SUBROUTINE BREAKT

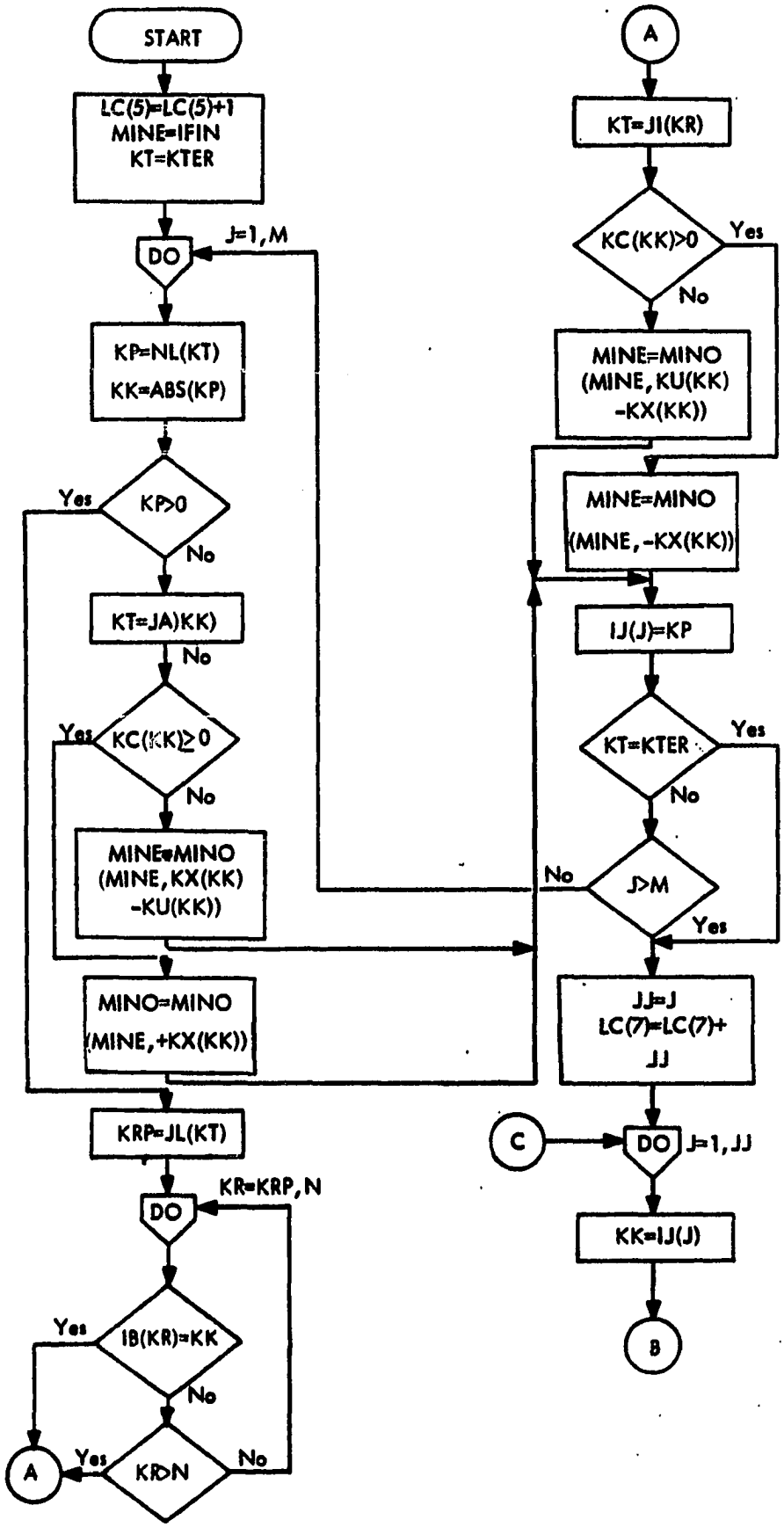

TABLE 5-9. SUBROUTINE BREAKT (Cont.)

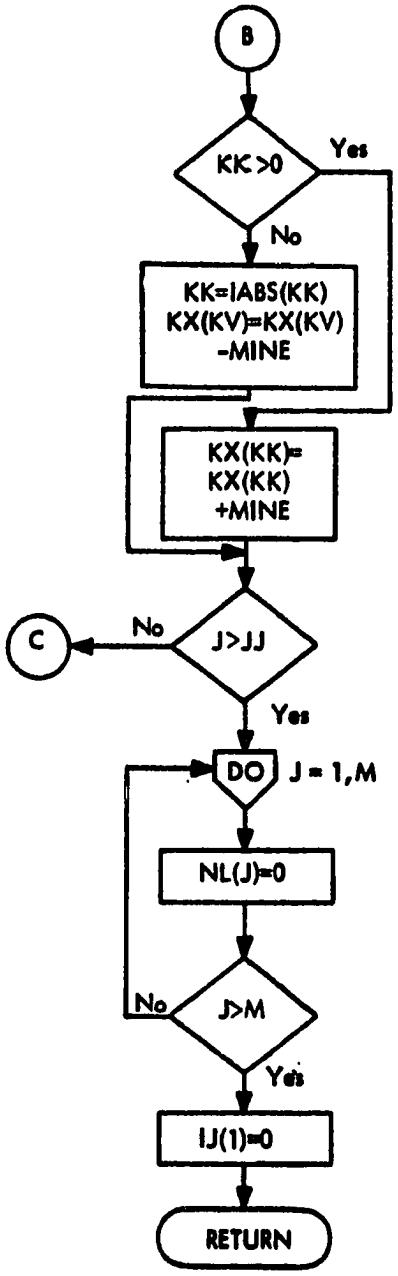

TABLE 5-10. SUBROUTINE RAISE

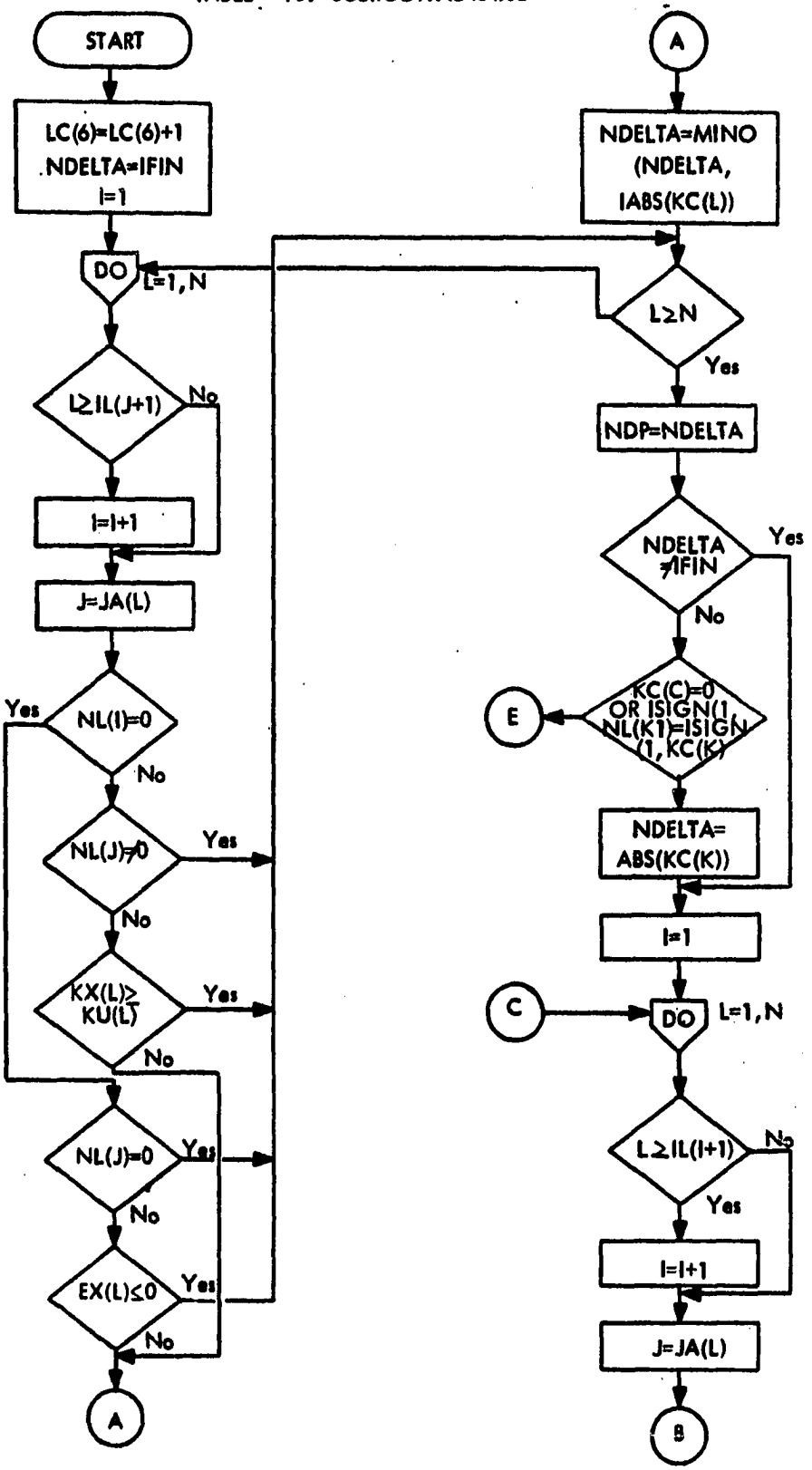

TABLE 5-10. SUBROUTINE RAISE (Cont.)

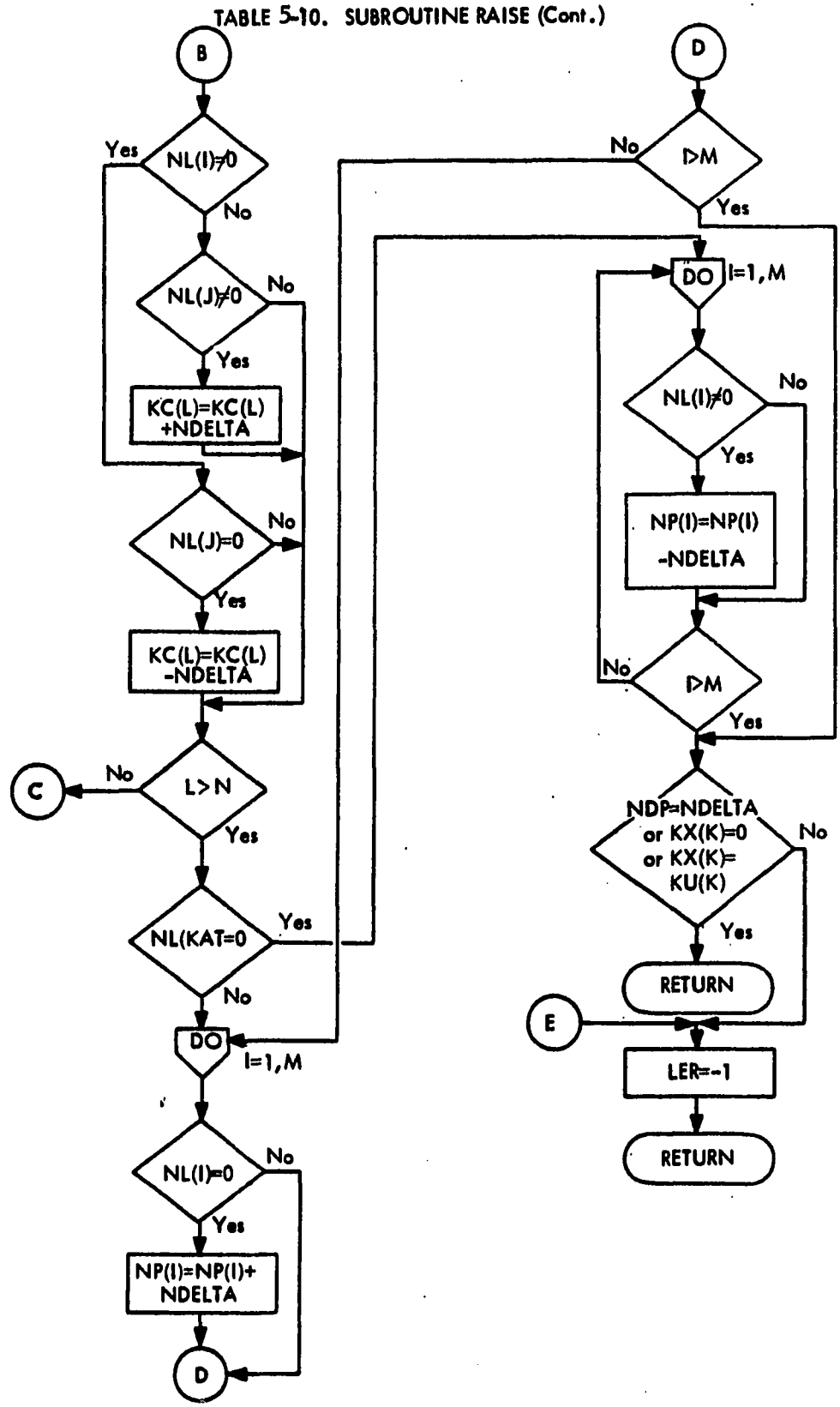

TABLE 5-11. SUBROUTINE OUTPUT

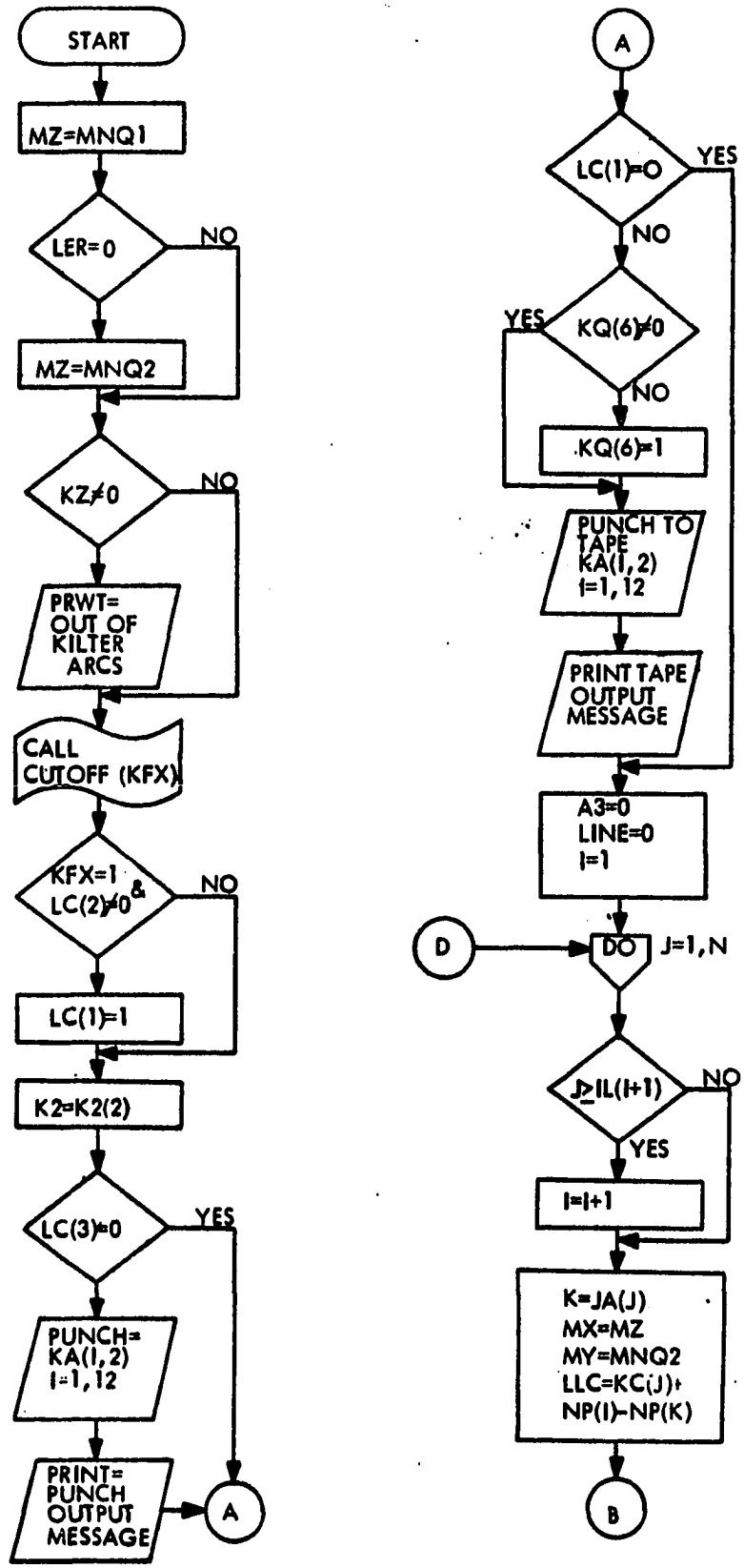

TABLE5-11. SUBROUTINE OUTPUT (Cont.)

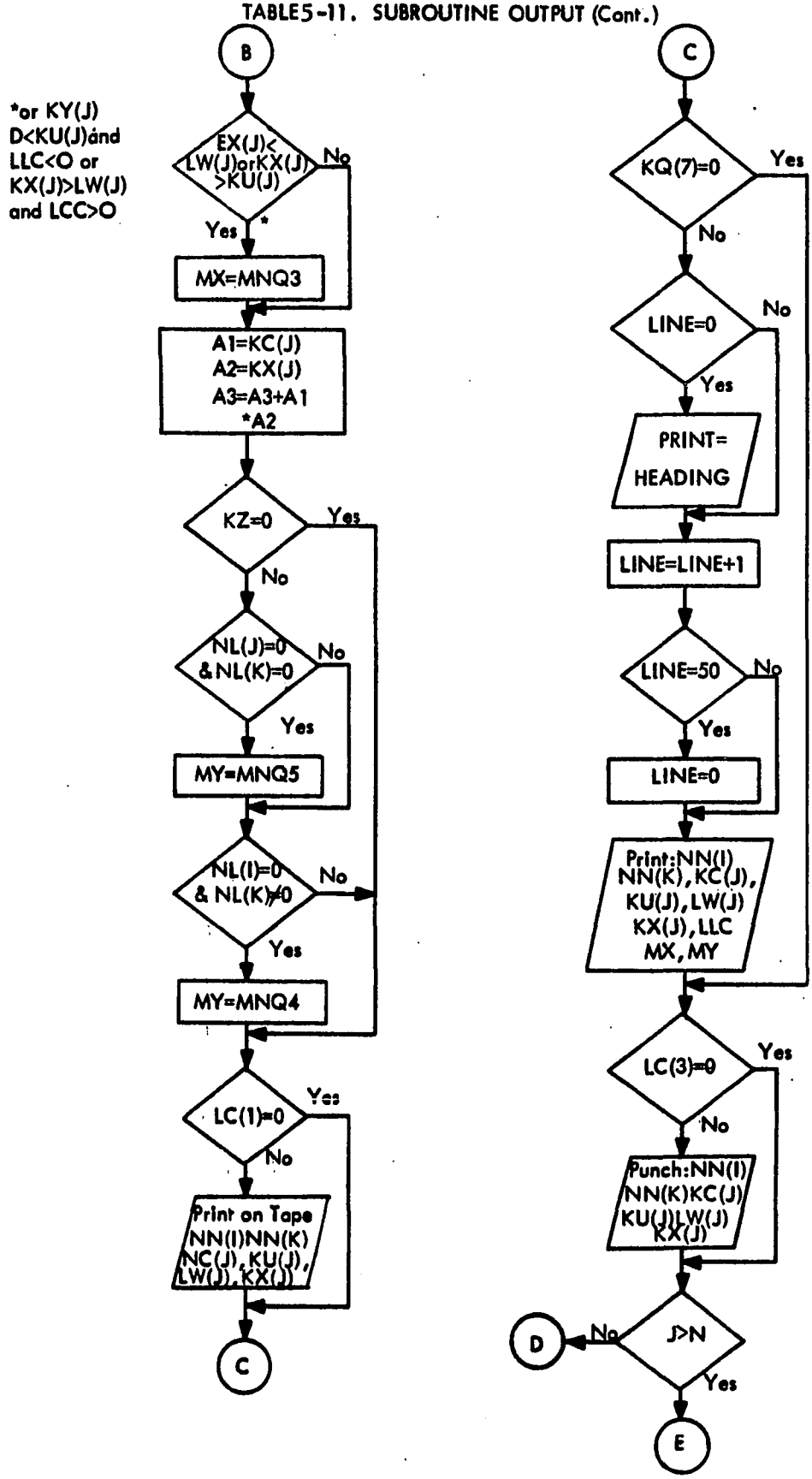

TABLE5-11. SUBROUTINE OUTPUT (Cont.)

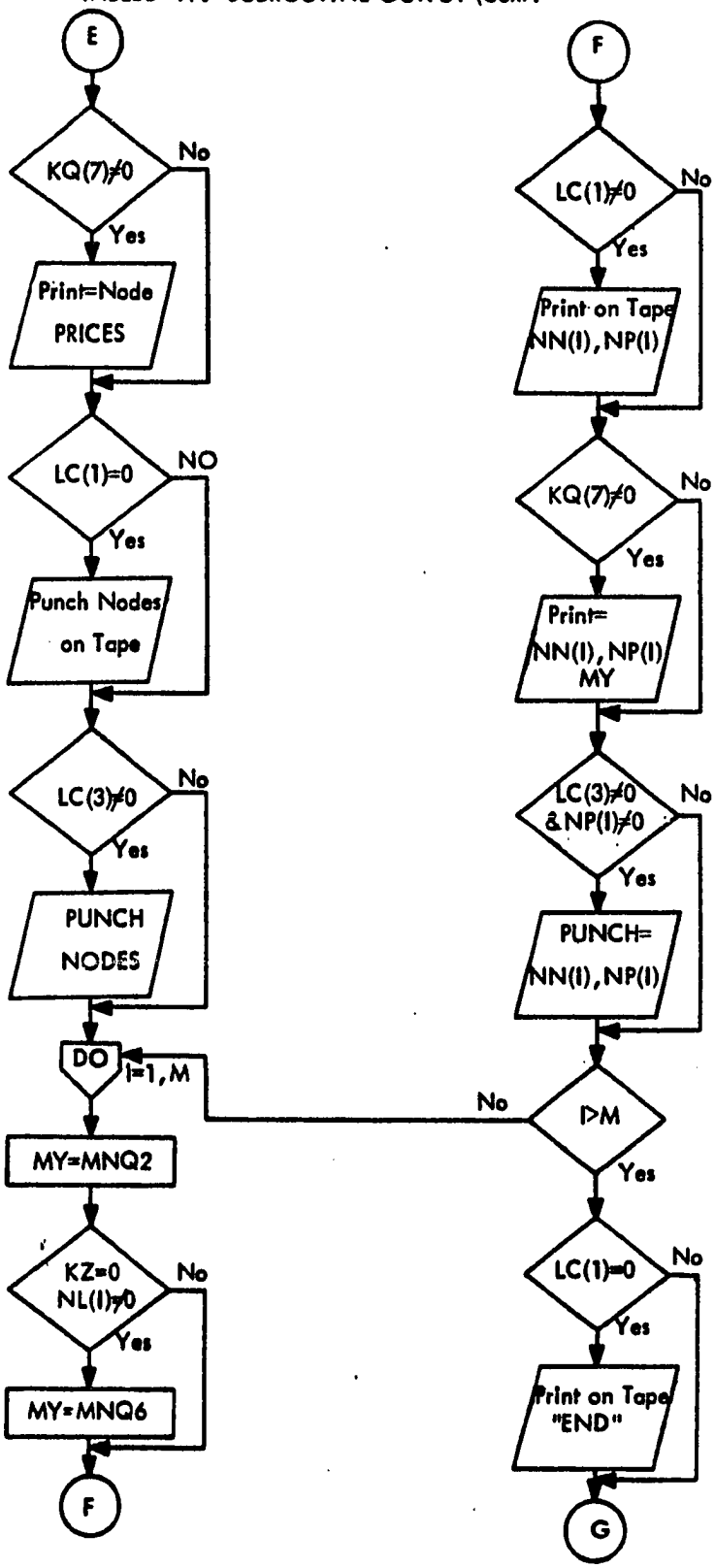

TABLE5-11. SUBROUTINE OUTPUT (Cont.)

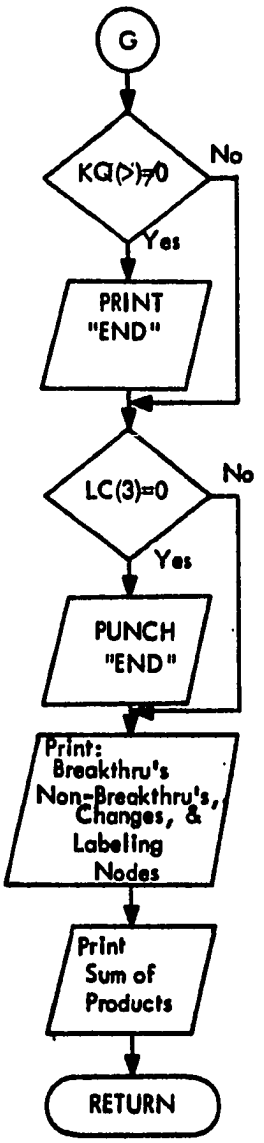

TABLE 5-12. SUBROUTINE LABEL

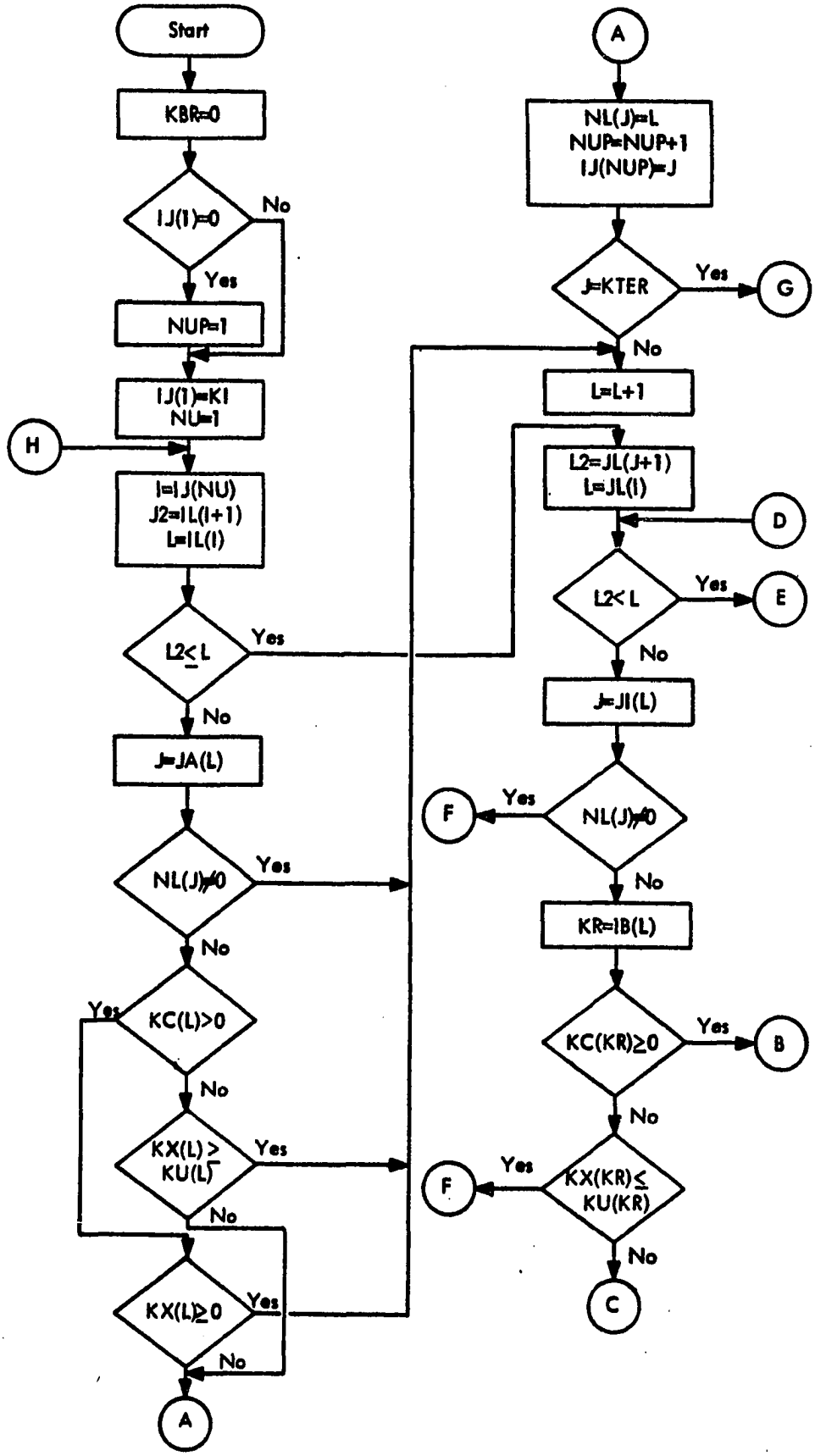

TABLE 5-12. SUBROUTINE LABEL (Cont.)

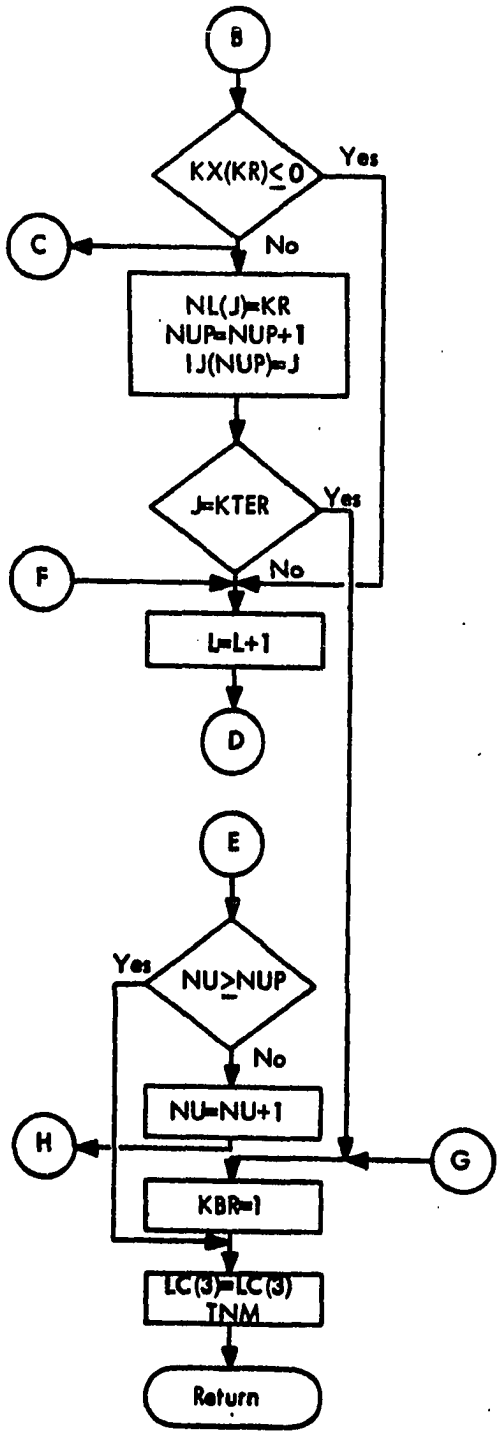

TABLE 5-13. FUNCTION NODENO

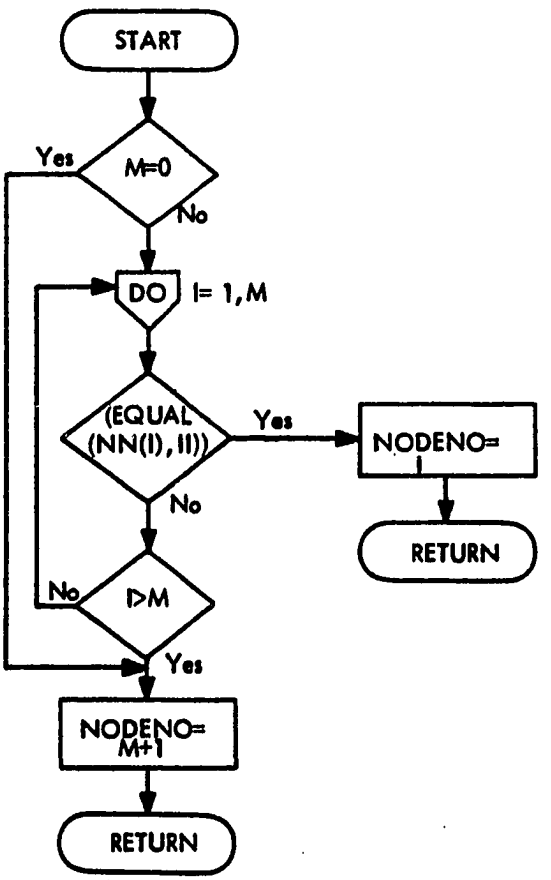

TABLE 5-14. FUNCTION LOOKUP

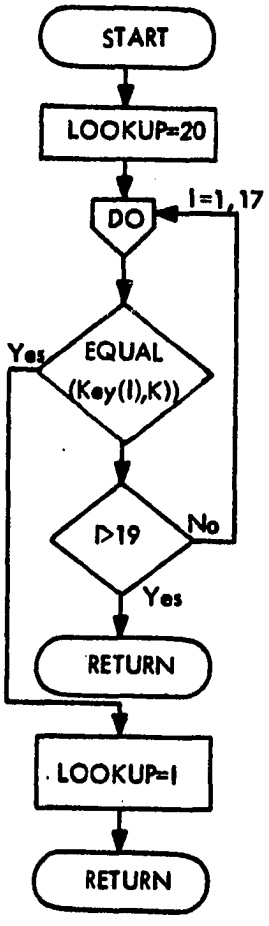

TABLE 5-15. LOGICAL FUNCTION EQUAL

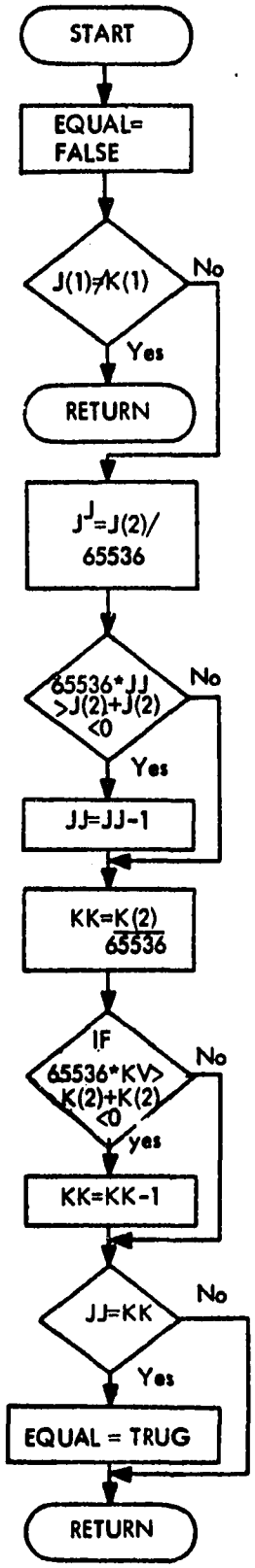

5.4 Data Requirements

The basic objective of this model is to determine how the desired level of network service can be most efficiently provided to the metropolitan area at the least cost. In the accomplishment of this objective, there are certain primary considerations that have to be made. First the selection of sources and treatment plants can be modified depending on quality and treatment required. The selection of sources and the required treatment can be modified in part to fit the network.

Secondly, the cost indebtedness of existing facilities is fully considered as is the obsolescence of these same facilities.

Thirdly, if alternatives are to be considered, then the feasible locations for these facilities, within the network, must be known prior to a model run. By establishing the minimum flow, certain constraints on the network can be exercised on the network when considering proposed and existing facilities. The use of a zero minimum flow is used to explore the feasibility of proposed links. Since the solution may indicate a zero flow on a proposed link, which means that it is not economically feasible, the determination of obsolescence or feasibility of each link can be determined. Also, by establishing a set minimum, political jurisdictions can be held to providing a certain level of service within the network. The reverse is also available when one wishes to examine the economics of relaxing one or more political constraints in favor of metropolitan source and treatment plants.

Finally, the maximum flow or capacity can also be used to explore alternatives and constraint resources. The maximum flow of each link can be set at the existing capacity of each link or that capacity after a planned expansion. The maximum flow can also be used to control the desired loading

of a natural resource without exceeding its capabilities.

The data requirements for the running of the model are fed into the model by each arc. The arcs are also grouped for each pair of nodes within the network. This procedure gives the model a high gaming capability when alternatives are being explored.

The first step in the establishment of the data requirements of this model is to set the nodes of the network. The nodes are established for each facility within the network. The facilities, primarily pipelines, can be broken apart to fit SAU, political jurisdictions, or basins if desired for complete analysis. It must be remembered that a detailed network is built using successive runs, and the network should be kept as simple as possible with each step (see Figure 5-3).

A super source and super sink are provided and connected, at no cost to ensure continuity of flow, or in other words, the flow into and out of a node has to be accounted for. An arc is established for each of the inputs and exhausts for each node. The capacity of that node is thereby established by the summation of the minimums by the upper and lower bounds of the input and exhaust arc groups for each node. Care must be exercised in the establishment of the network so that it is representative of the existing network.

The data requirements for the source and sink nodes with their connecting links will have now been satisfied. The next step is the assignment of the upper and lower bounds for the flow in each link. The bounds can be set anywhere from zero to 9999 million gallons per day (MGD). If zero is used, the solution will be equal to or greater than zero. When establishing a fixed cost or when it is desired that a plant be used at least to its debt

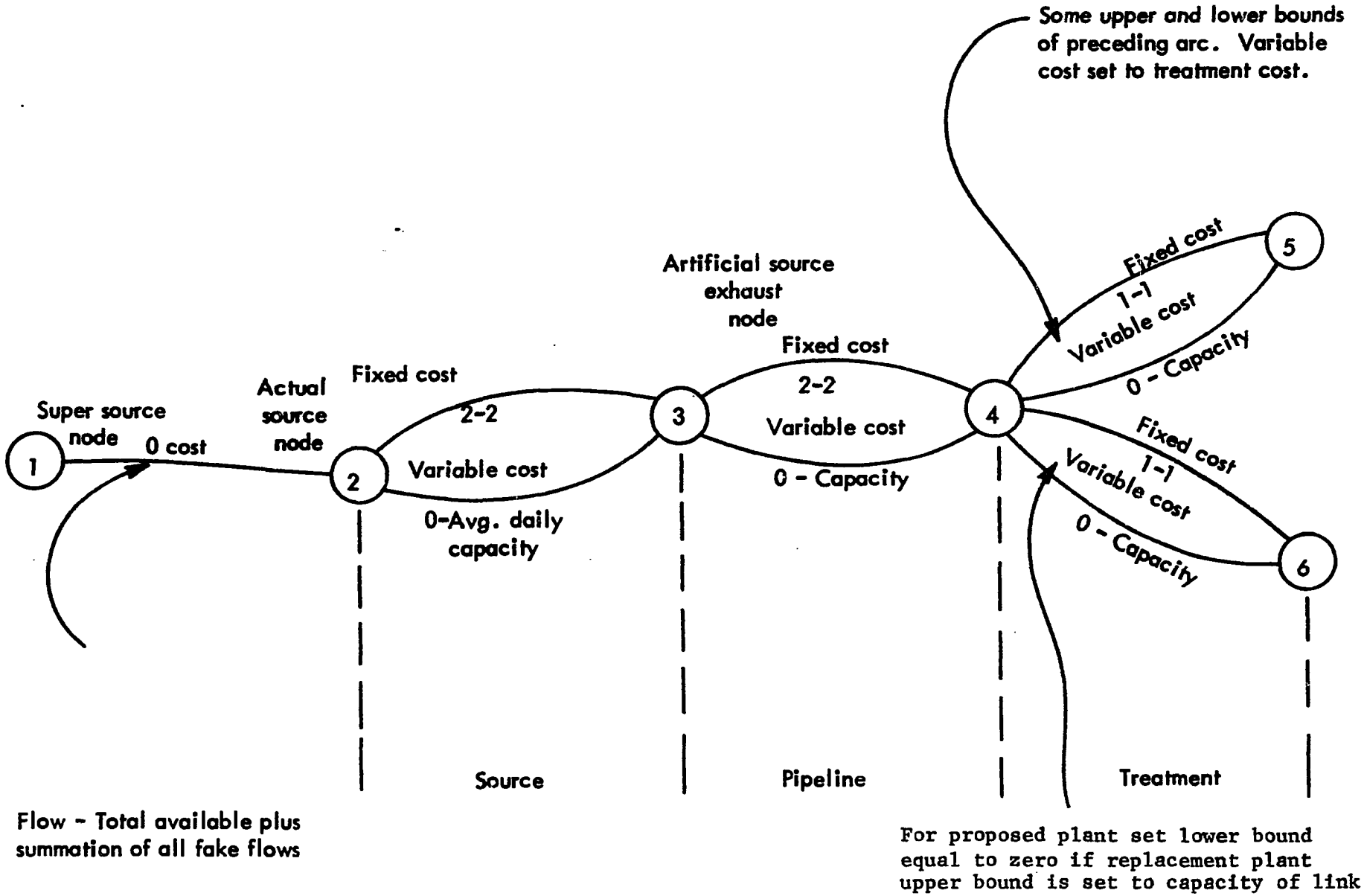

Figure 5-3. Example Flow Net.

limit, a minimum flow can be set. If a specific flow is desired, then the upper and lower bounds are both set equal to that flow.

Since there are no limits to the number of links entering or departing a node, although each node must have at least one link entering and one link departing, a full range of possibilities are available for each of the facilities. The fixed cost is set by assigning 1 MGD to both the upper and lower bounds of one of the links. This MGD is then added to all the fixed source links that feed it so that it does not affect the actual flow. This network is referred to as "fake flows". The variable flows can be assigned a cost $/MGD, and the minimum and upper bounds assigned from 0 to 9999 MGD. The only constraint is that the upper limit must be greater than or equal to the lower bounds. Zero cost arcs can be added to provide continuity and/or a certain disaggregation of arcs.

After the capacities have been assigned, the remaining data requirements are added to each of the links. This is the cost of that link in dollars per million gallons per day ($/MGD). This cost data should be the actual cost data in all cases possible. If the actual cost data is not available, then it should be estimated using standardized procedures. If the variable cost is a linear function that depends on the size of the facility, as in treatment plants, then an estimate has to be made initially as to the size needed. A family of curves is developed based on the cost per flow (see Figure 5-4). The upper and lower limits are set to the capacity range of the estimated plant size. The slope of that particular curve is entered as the cost for that link. After the run, the link results are examined. If the results show that the plant is being used to full capacity, then the link is desirable and a larger facility curve is used. If it is not being used, then a smaller

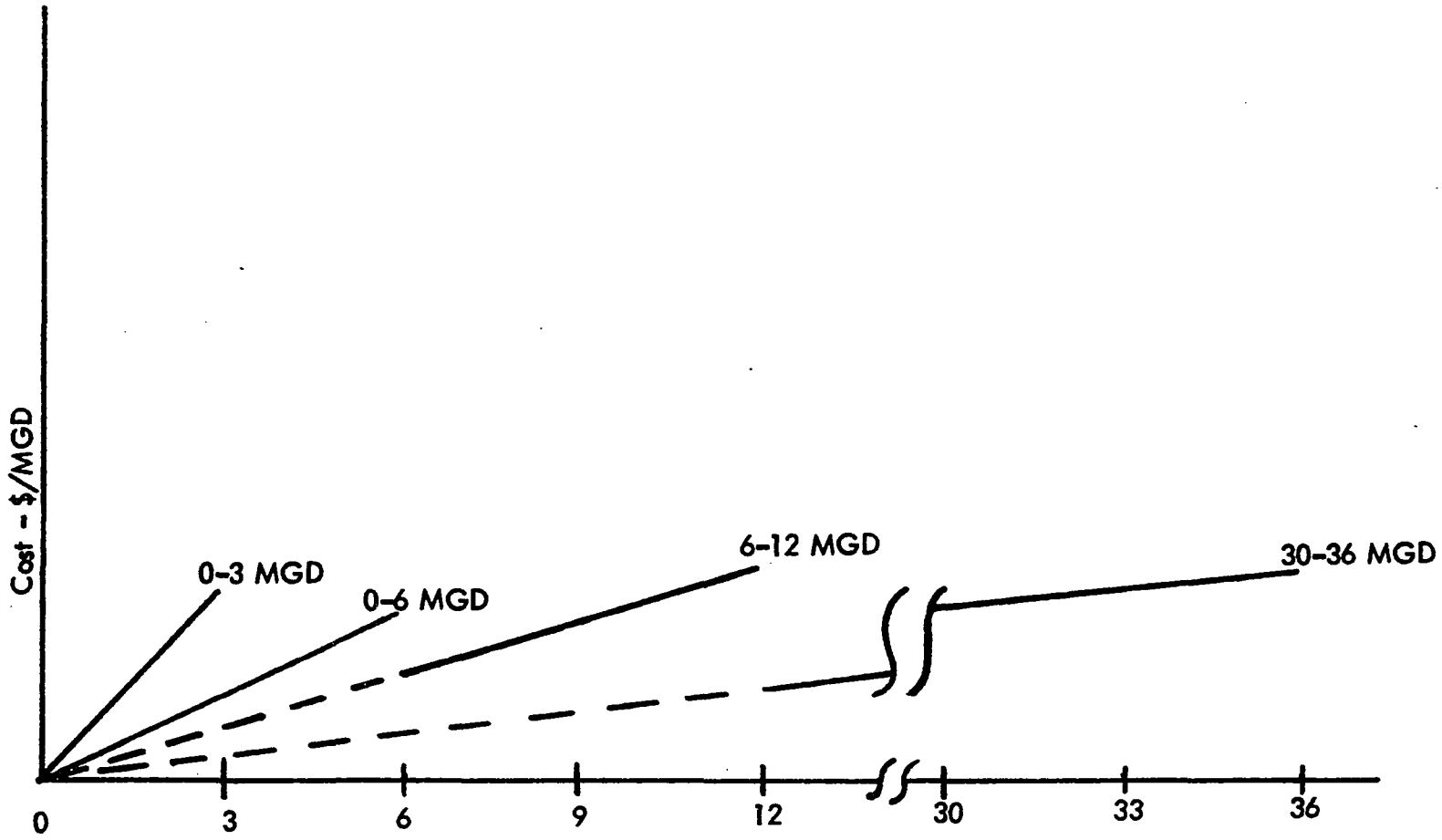

Figure 5-4. Linear Cost Functions.

facility curve can be tried.

One approach that has proven effective is to take the largest facility curve and minimum cost and set the lower bounds equal to zero. After the first run, set the link cost equal to the facility curve slope that the results dictate. Then run the model again to verify the results.

Future cost data can be acquired applying the Engineering News-Record Building Cost Index to the actual and derived cost data (24). There are other methods used for deriving and projecting cost data. No attempt will be made to suggest that one method is better than another in this report. The methods best understood and used by the using agency should be applied. The method used here is the one currently being used by the author.

5.5 Data Arrangement

The data are arranged in groups of links or arcs for each pair of nodes. One card is used for each arc using the following format:

Col. 1 - 6 Blank

Col. 7 -12 Name of source node i. All different combinations of characters including blanks for each name.

Col. 13-18 Name of sink node j. Same character availability as source node i.

Col. 19-20 Blank

Col. 21-30 Unit cost of sending flow from source i to sink j along this link, $/MGD.

Col. 31-40 Upper bounds of flow for this link, MGD.

Col. 41-50 Lower bounds of flow for this link, MGD.

Col. 51-60 Input flow for this link, usually set to zero. It is used only if a single input to the node has been established.

All fields are right hand justified. A listing of the input used to verify the model for the Oklahoma City Political Jurisdiction is shown on the next page.

```
BEGIN
 OKC RUN 2
ARCS
      SS 1   AS 2              0        159        159
      AS 2   ATOKA3         3031          1          1
      AS 2   ATOKA3           45         50         50
      AS 2   DRAP 4         2000          1          1
      AS 2   DRAP 4           22          5          5
      AS 2   HUGO 8         5205          1          1
      AS 2   HUGO 8           27         30         30
      AS 2   FTSY10          142          1          1
      AS 2   FTSY10            2          9          9
      AS 2   CAN 12          407          1          1
      AS 2   CAN 12            2         16         16
      AS 2   OVH 13          608          1          1
      AS 2   OVH 13            4         20         20
      AS 2   WW  15          447          1          1
      AS 2   WW  15            7         22         22
      ATOKA3DRAP 4          1512          1          1
      ATOKA3DRAP 4             3         60          0
      ATOKA3ASSK20             0         60          0
      DRAP 4DRAP 5             1          2          2
      DRAP 4AN  22             1         30          0
      DRAP 4AN  22             0         60          0
      AN  22DRAP 5             0         90          0
      HUGO 8DTPE 9          1472          1          1
      HUGO 8DTPE 9             4         30          0
      FTSY10CAN 12             3          1          1
      FTSY10CAN 12             1          9          0
      FTSY10AS  11             0          9          0
      CAN 12OVH 13             2          1          1
```

```
        CAN 12OVH 13          1        25         0
        CAN 12AS  11          0        25         0
        OVH 13OTP 16          1         1         1
        OVH 13OTP 16          1        26         0
        OVH 13HEF 14          2         1         1
        OVH 13HEF 14          1        25        15
        OVH 13AS  11          0        45         0
        HEF 14HTP 18          1         1         1
        HEF 14HTP 18          1        42         0
        WW  15OTP 16        234         1         1
        WW  15OTP 16         11        22         0
        WW  15ASSK20          0        22         0
        DRAP 5DRAP 6        294         2         2
        DRAP 5DRAP 6          2        60         0
        DTPE 9DRAP 6        120         1         1
        DTPE 9DRAP 6          2        30         0
        AS  11ASSK20          0        69         0
        OTP 16OTP 17        270         2         2
        OTP 16OTP 17          2        30         0
        HTP 18HTP 19        212         1         1
        HTP 18HTP 19          3        42         0
        DRAP 6OKC  7        274         3         3
        DRAP 6OKC  7          1        90         0
        OTP 17OKC  7        289         2         2
        OTP 17OKC  7          1        30         0
        HTP 19OKC  7        307         1         1
        HTP 19OKC  7          1        30         0
        OKC  7ASSK20          0        94        94
        ASSK20SSK 21          0       159       159
        SSK 21SS 1            0       159       159
END

SOLVE
QUIT
READY
```

5.6 Model Format

The listing of the model is shown on the following pages.

```
EDI LIS NETWORK1

100         OPTION LOAD
110C           MAIN ROUTINE OF RS OKF3  OUT OF KILTER NETWORK ROUTINE
120          FILENAME NN
122         FILENAME KA
130         COMMON NN( 500),NP( 500),IL( 501),JL( 501),IJ( 500),NL( 500),
140        & JI(1000),KC(1000),KU(1000),KX(1000),JA(1000),IB(1000),LN(1000),
150        & LC(6),KA(12,2),KQ(9),IX(9),M,N,LER,KAT,KOR,KTER,MINE,IFIN,KI,KC,K
160         FILENAME KOR, KU
170         INPUT, KOR
180         INPUT, KU
190C       MAXIMUM NODES-NODMAX- DIMENSION OF NN NP IJ NL-- +1 FOR IL JL
200         KQ(5) = 500
210C       MAXIMUM ARCS-ARCMAX- DIMENSION OF JI KC KU KX JA IB LN
220         KQ(4) = 1000
230C     INFINITY
240         IFIN =  2147483647
250C     ERROR NUMBERS (IN LER)
260C     1  TRIVIAL (TRANSPORTATION PROBLEM)
270C     2  CARD PUNCHING ERROR WHICH MAY BE RECOVERABLE
280C     3  ERROR NOT RECOVERABLE, BUT CARD READING MAY CONTINUE
290C     4  CATASTROPHIC ERROR- RUN MUST BE SKIPPED
300C    -1 (AFTER SOLVE) PROBLEM INFEASABLE
310C    -2  KICKED OFF BY TIME LIMITATION
320C    -3  OVERFLOW IN NODE PRICES
330         KQ(6)=0
340         KQ(9)=0
350         KAT=0
360     100 L=1
370     101 CALL PRELIM(KS,L)
380         IF (KS.NE.0)  GO TO 1
390     200 CALL ARCRD(L)
400         IF (LER.GE.4) GO TO 88
410         IF (L.EQ.0)  GO TO 1
420       3 CALL NODERD
430       1 IF (KAT.EQ.0.OR.N.EQ.0)  GO TO 87
440         CALL POSTRD
450         CALL SOLVE(KE)
460         IF (LER.GT.0) GO TO 88
470     199 CALL OUTPUT (KE)
480         GO TO 100
490      87 WRITE(KU,59)
500         LER=4
510      88 KAT=0
520         WRITE(KU,58)     LER
530      89 L = LOOKUP(KA(1,1))
540         IF(L.EQ.1.OR.L.EQ.4.OR.L.EQ.6.OR.L.EQ.7.OR.L.EQ.15) GO TO 101
550         READ (KOR,51)KA(1,1)
560         GO TO 89
570      51 FORMAT(A6)
580      58 FORMAT( 5HOTYPE,16,24H ERROR, SKIP TO NEXT RUN)
590      59 FORMAT(30H ****NO ARC DATA IN THIS RUN  )
600         END

READY
```

```
EDI LIS PRELIM1

100         SUBROUTINE PRELIM(KS,L)
110C  READ PRELIMINARY CONTROL CARDS
120         FILENAME IN
122         FILENAME KA
130         COMMON NI( 500),IP( 500),IL( 501),JL( 501),IJ( 500),NL( 500),
140        & JI(1000),KC(1000),KU(1000),KX(1000),JA(1000),IB(1000),LL(1000),
150        & LC(6),KA(12,2),KQ(9),IX(9),N,N,LER,KAT,KOR,KTER,NINE,IFIN,K1,KO,K
155         FILENAME KOR, KO
160         LER=0
170         KS=0
190         KQ3=KQ(3)
200         WRITE(KO,96)
210         CALL CUTOFF(LL)
220         IF(LL.NE.1) GO TO 20
230      11 WRITE (KO,97)
240C           END JOB
250     180 IF (KQ(6).EQ.0) GO TO 182
260     181 K2=KQ(2)
270         WRITE (KO,98)
280         GO TO 183
290     182 WRITE (KO,99)
300     183 STOP
310C   READ A CONTROL CARD
320      21 READ (KOR,90)(KA(I,1),I=1,12)
330         WRITE (KO,91)(KA(I,1),I=1,12)
340         L=LOOKUP(KA(1,1))
350      20 IF(L.EQ.15) GO TO 180
360         IF (L.EQ.17) GO TO 21
370         IF (L.GT.7) GO TO 110
380         GO TO (21,50,110,6,110,6,60),L
390C           TITLE
400     110 DO 112 I=1,12
410     112   KA(I,2)=KA(I,1)
420         GO TO 21
430C           SAVE
440      50 KS=1
450         RETURN
460C           ARCS
470      60 KAT=1
480         RETURN
490C        SKIP
500       6 IF (KQ(9).NE.0) GO TO 7
510       2 KQ(9)=1
530       7 IF (L.NE.4) GO TO 13
550         GO TO 21
560C        SKIP
570      13 READ (KQ3,92)KA(1,1)
580         IF (LOOKUP(KA(1,1)).NE.16) GO TO 13
590         GO TO 21
600      90 FORMAT(12A6)
610      91 FORMAT(12A6)
620      92 FORMAT(A6)
630      96 FORMAT(///////////)
640      97 FORMAT(24H TIME LIMIT EXCEEDED     )
650      98 FORMAT(31HORESERVED TAPE HAS BEEN WRITTEN///1H0)
660      99 FORMAT(34HORD RESERVED TAPE HAS BEEN WRITTEN)
670         END

READY
```

```
EDI LIS ARCRDI

100         SUBROUTINE ARCRD(LL)
110C  ARC READ,  READ ARC DATA CARDS
115         FILENAME KOR,  KU
120         FILENAME NN
122         FILENAME KA
130         COMMON NN( 500),NP( 500),IL( 501),JL( 501),IJ( 500),NL( 500),
140        & JI(1000),KC(1000),KU(1000),KX(1000),JA(1000),IB(1000),LW(1000),
150        & LC(8),KA(12,2),KQ(9),IX(9),M,N,LER,KAT,KOR,KTER,MINE,IFIN,KI,KO,K
160         I=0
170         M = 0
180         N=0
190         LL=0
200       6 READ (KOR,90) (KA(I,1),I=1,3),(IX(I),I=1,4)
210         K = LOOKUP(KA(1,1))
220         IF (K.EQ.16) GO TO 1
230         IF (K.EQ.8)  GO TO 2
240         IF (K.EQ.17) GO TO 3
250         GO TO 4
260C      END OF DATA
270       2 LL=2
280       1 DO 99 I=MM,M
290           IF (I.GT.MM)WRITE(KO,94) NN(I)
300           IL(I+1) = N+1
310      99 CONTINUE
320         IF(K.GT.KQ(5)) GO TO 23
330         IF (MM.NE.M) LER=MAXO(LER,1)
340C    CLEAR NODE PRICES
350         DO 100 I=1,M
360           NP(I)=0
370     100 CONTINUE
380         RETURN
390C    STORE ARC DATA
400       3 N=N+1
410         IF (N.GT.KQ(4)) GO TO 20
420         NN=N
430       7 KC(N)=IX(1)
440         KU(N)=IX(2)
450         LW(N)=IX(3)
460         KX(N)=IX(4)
470         K=NODENO(KA(2,1))
480         IF (K.EQ.MM) GO TO 9
490         IF(K.LT.MM) GO TO 10
500C    EXCHANGE NODES
510         MM=MM+1
520         NN(K)=NN(MM)
530         NN(MM)=KA(2,1)
540         IF(K.GT.M) M= M+1
550         DO 30 J=1,M
560           IF (JA(J).EQ.K) GO TO 29
570           IF (JA(J).EQ.MM) JA(J)=K
580           GO TO 30
590      29   JA(J)=MM
600      30 CONTINUE
```

```
      IL(MM)=N
    9 K=NODENO (KA(3,1))
      IF (K.GT.N) N=N+1
      NN(K)=KA(3,1)
      JA(NN) = K
      GO TO 06
C   ARCS OUT OF ORDER, SLIDE THEM DOWN
   10 WRITE (KO,91) KA(2,1),KA(3,1)
      LER = MAXO(LER,2)
      KK=K+1
      DO 101 I=KK,MM
        IL(I)=IL(I)+1
  101 CONTINUE
      KK= IL(K+1)
      DO 102 JJ=KK,N
        J = N-JJ+KK
        KC(J)=KC(J-1)
        KX(J)=KX(J-1)
        KU(J)=KU(J-1)
        LN(J)=LN(J-1)
        JA(J)=JA(J-1)
  102 CONTINUE
      MM=KK-1
      KC(NN)=IX(1)
      KU(NN)=IX(2)
      LN(NN)=IX(3)
      KX(NN)=IX(4)
      GO TO 9
C    ERROR MESSAGES
    4 NM=N+1
      WRITE (KO,92)NM
      WRITE (KO,93) (KA(I,1),I=1,3),(IX(I),I=1,4)
      LER = MAXO(LER,3)
      IF (K.NE.20) RETURN
      GO TO 6
   20 WRITE (KO,89)
   25 LER= 4
      RETURN
   23 WRITE (KO,88) N,KO(5)
       GO TO 25
   88 FORMAT(5H ****,I6,30H NODES IN THIS RUN  MAXIMUM IS,I6)
   89 FORMAT(30HOTOO MANY ARCS IN THIS RUN****)
   90 FORMAT(3A6,2X,4I10)
   91 FORMAT(36H **SOURCE NODES NOT ADJACENT IN ARC A6,1X,A6)
   92 FORMAT(29H ***FIELD ERROR IN ARC NUMBER,I6)
   93 FORMAT( 1X,3A6,2X,4I10/1X)
   94 FORMAT(24H *NO ARC BEGINS AT NODE A6)
       END

READY
```

```
EDI LIS NODERD1

100         SUBROUTINE NODERD
110C  NODE READ,  READ NODE DATA CARDS
115         FILENAME KOR, KO
120         FILENAME NN,KA
130         COMMON NN( 500),NP( 500),IL( 501),JL( 501),IJ( 500),NL( 500),
140        & JI(1000),KC(1000),KU(1000),KX(1000),JA(1000),IB(1000),LK(1000),
150        & LC(8),KA(12,2),KQ(9),IX(9),M,N,LER,KAT,KOR,KTER,MINE,IFIN,KI,KO,K
160         I = 0
170       03 I = I+1
180         READ (KOR,90) KA(1,1),KA(2,1),IX(1)
190         KEYW=LOOKUP(KA(1,1))
200         IF( KEYW.EQ.16) RETURN
210         IF(KEYW.NE.17) GO TO 2
220         K=NODENO(KA(2,1))
230         IF (K.GT.M) GO TO 6
240       5 NP(K)=IX(1)
250         GO TO 03
260       6 WRITE (KO,91) KA(2,1)
270      10 LER= MAXO(LER,1)
280         GO TO 03
290       2 WRITE (KO,92)I,KA(1,1),KA(2,1),IX(1)
300         LER = MAXO(LER,2)
310         IF (KEYW.NE.20) GO TO 99
320         GO TO 10
330      99 RETURN
340      90 FORMAT(2A6,8X,I10)
350      91 FORMAT(7H *NODE , A6,12H NOT IN ARCS )
360      92 FORMAT(34H **FIELD ERROR IN NODE CARD NUMBER,I6/1H 2A6,8X,I10)
370         END

READY

EDI LIS NODENOT

100         FUNCTION NODENO(II)
110C    FIND NODE NUMBER  OF NODE GIVEN
120         REAL II
125         FILENAME NN, KA
130         COMMON NN( 500),NP( 500),IL( 501),JL( 501),IJ( 500),NL( 500),
140        & JI(1000),KC(1000),KU(1000),KX(1000),JA(1000),IB(1000),LK(1000),
150        & LC(8),KA(12,2),KQ(9),IX(9),M,N,LER,KAT,KOR,KTER,MINE,IFIN,KI,KO,K
160         LOGICAL EQUAL
170         IF  (M.EQ.0)  GO TO 3
180         DO 1 A=1,M
190           IF (EQUAL(NN(I),II))  GO TO 2
200       1 CONTINUE
210       3 NODENO=M+1
220         RETURN
230       2 NODENO=I
240         RETURN
250         END

READY
```

```
EDI LIS POSTRD1

100         SUBROUTINE POSTRD
110C    READ POST-DATA CONTROL CARDS
120         FILENAME NN,KA
125         FILENAME KOR, KO
130         COMMON NN( 500),NP( 500),IL( 501),JL( 501),IJ( 500),NL( 500),
140        & JI(1000),KC(1000),KU(1000),KX(1000),JA(1000),IB(1000),LK(1000),
150        & LC(8),KA(12,2),KQ(9),IX(9),M,N,LER,KAT,KOR,KTER,MINE,IFIN,KI,KO,K
160C    OUTPUT FLAGS
170         DO 19 I=1,8
180           LC(I)=0
190      19 CONTINUE
200         KQ(7)=1
210         KQ(8)=0
220      20 READ (KOR,95)(KA(I,1),I=1,3),(IX(I),I=1,5)
230         L = LOOKUP(KA(1,1))
240         IF (L.EQ.18.OR.L.EQ.17) GO TO 140
250         WRITE (KO,88)KA(1,1),KA(2,1),KA(3,1)
260         IF (L.EQ.9) GO TO 121
270         IF (L.EQ.14.OR.L.EQ.5.OR.L.EQ.13) GO TO 111
280         IF (L.EQ.3) GO TO 300
290         GO TO 200
300C                COMPUTE
310     111 WRITE (KO,93)M,N
320         IF (L.EQ.14) KQ(8)=1
330         IF (L.EQ.13) KQ(8)=2
340     999 RETURN
350C                SET OUTPUT CONTROL
360     121 L = LOOKUP(KA(2,1)) -9
370         IF (L.EQ.10) GO TO 82
380         IF (L.LE.0.OR.L.GT.3) GO TO 200
390      81 LC(L) = 1
400         GO TO 20
410      82 KQ(7) =0
420         GO TO 20
430C                        ALTER
440     140 IF (IX(1).LT.1) IX(1)=1
450     142 WRITE (KO,91)(KA(I,1),I=1,3),(IX(I),I=1,5)
460         N1=NODENO(KA(2,1))
470         N2=NODENO(KA(3,1))
480         IF (N1.LE.N .AND. N2.LE.N)  GO TO 145
490     144 WRITE (KO,92)
500         LER=MAXO(LER,3)
```

```
      GO TO 20
  145 L1 = IL(N1)
      L2 = IL(N1+1) -1
      IF (L2.LT.L1)GO TO 144
  146 DO 147 LL=L1,L2
      IF (J(LL).NE.N2) GO TO 147
        IX(1)=IX(1)-1
        IF (IX(1).EQ.0) GO TO 149
  147 CONTINUE
      GO TO 144
  149 KC(LL)=IX(2)
      KU(LL)=IX(3)
      LW(LL)=IX(4)
      KX(LL)=KX(LL)+IX(5)
      GO TO 20
C REFNOD
  300 L=NODEND(KA(2,1))
      IF (L.GT.N) GO TO 301
      KAT=L
      GO TO 20
  301 WRITE(KO,94)    KA(2,1)
      LER= MAXO(LER,1)
      GO TO 20
C CARD PUNCHING ERROR
  200 LER=MAXO(LER,3)
      WRITE (KO,87)KA(1,1),KA(2,1),KA(3,1)
      IF (L.NE.20) RETURN
      GO TO 20
   87 FORMAT(18H ***ILLEGAL CARD =3A6)
   88 FORMAT(1X,3A6)
   91 FORMAT( 1X,3A6,I2,5I10)
   92 FORMAT(42H ***ARC ON ABOVE ALTER CARD NOT DEFINED    )
   93 FORMAT(12H NO OF ARCS=I5,  13H NO OF NODES=I5)
   94 FORMAT(9H ** NODE A6,12H NOT IN ARCS )
   95 FORMAT(3A6,I2,5I10)
      END

READY
```

```
EDI LIS SOLVE1

100         SUBROUTINE SOLVE (KE)
110C    SET UP ARRAYS AND CALL THE NETWORK SOLVING ROUTINES
115         FILENAME KOR, KO
120         FILENAME NN,KA
130         COMMON NN( 500),NP( 500),IL( 501),JL( 501),IJ( 500),NL( 500),
140        & JI(1000),KC(1000),KU(1000),KX(1000),JA(1000),IB(1000),LL(1000),
150        & LC(8),KA(12,2),KQ(9),IX(9),M,N,LER,KAT,KOR,KTER,MINE,IFIN,KI,KO,K
170C                    FORM JL LIST
180         DO 8 I=1,M
190           NL(I)=0
200       8 CONTINUE
210         DO 10 J=1,N
220           I = JA(J)
230           NL(I)=NL(I)+1
240      10 CONTINUE
250         JL(1) = 1
260         DO 20 I=1,M
270           IF (NL(I).NE.0) GO TO 23
280           WRITE (KO,91)NN(I)
290           LER = MAX0(LER,1)
300      23   JL(I+1) = JL(I) + NL(I)
310           IJ(I)=JL(I)
320           NL(I)=0
330      20 CONTINUE
340         I=1
350         DO 2 J=1,N
360           IF (J.GE.IL(I+1))I=I+1
370           K=JA(J)
380C    CALCULATE CIRCULATION AND CDAR
390           NL(I)=NL(I)-KX(J)
400           NL(K)=NL(K)+KX(J)
410           KC(J)=KC(J)+NP(I)-NP(K)
420C    TEST FOR LOWER BOUND GREATER THAN UPPER
430           IF (LL(J).LE.KU(J)) GO TO 50
440           WRITE(KO,51) NN(I),NN(K)
450           LER=MAX0(LER,2)
460           IX(9)=KU(J)
470           KU(J)=LL(J)
480           LL(J)=IX(9)
490C    SUBTRACT LOWER BOUND FROM UPPER AND FROM X.
500       50  KU(J)=IABS(KU(J)-LL(J))
510           KX(J)=KX(J)-LL(J)
520C    SETUP JI AND IB LISTS
530           L=IJ(K)
540           JI(L)=I
550           IB(L)=J
560           IJ(K)=IJ(K)+1
570           IF (I.LE.K)  GO TO 2
580           KX(J) = 0
590           IF (KC(J).LT.0) KX(J)=KU(J)
```

```
      2 CONTINUE
C     MESSAGE FOR NON ZERO CIRCULATION
        DO 5 I=1,M
          IF (NL(I).NE.0) WRITE(KU,90) NN(I) ,NL(I)
          IF (NL(I).NE.0) LER=MAX0(LER,1)
      5 CONTINUE
        KE=0
        IF  (LER.GT.KQ(8)) RETURN
        KLE=0
        I=1
C     TRY TO BRING ALL ARCS INTO KILTER
        DO 26 K=1,N
          IF (K.GE.IL(I+1))  I=I+1
          CALL CUTOFF(KFX)
          IF (KFX.EQ.1) GO TO 16
          CALL KILTER (I)
          IF (LER.EQ.(-3)) GO TO 24
          IF(LER.NE.0) KE=KE+1
          IF (KE.NE.1) GO TO 26
          IX(8)=K
          IX(9)=I
     26 CONTINUE
C     COMPLETED CHECKING ALL ARCS
        LER=-MIN0(1,KE)
     99 IF (KE.EQ.0) GO TO 100
        K=IX(8)
        CALL KILTER(IX(9))
C     RESTORE KC, KX, KU
    100 IF (KLE.NE.0) LER = -2
        I=1
        DO 101 J=1,N
          IF (J.GE.IL(I+1))  I=I+1
          K=JA(J)
          KU(J)=KU(J)+LW(J)
          KX(J)=KX(J)+LW(J)
          KC(J)=KC(J)-NP(I)+NP(K)
    101 CONTINUE
        RETURN
     16 KLE=1
        L=JA(K)
         WRITE (KU,53) NN(I),NN(L)
         GO TO 99
     24 L=JA(K)
        WRITE (KU,54)  NN(I),NN(L)
        GO TO 100
     51 FORMAT(7H **ARC A6,1X,A6,36H HAS LOWER BOUND GREATER THAN UPPER )
     53 FORMAT(33HOJOB CUTOFF BY TIME LIMIT ON ARC A6,1X,A6)
     54 FORMAT(33HOOVERFLOW IN FLOW PARTS  ON ARC A6,1X,A6)
     90 FORMAT(7H *FLOW A6,28H FLOW=CONSERVATIVE, NET FLOW=I12)
     91 FORMAT(22H *NO ARC ENDS AT NODE ,A6)
        END

REALY
```

```
EDI LIS KILTER1

100         SUBROUTINE KILTER (I)
110C    BRING ARC K INTO KILTER
120         FILENAME NN,KA
125         FILENAME KOR, KO
130         COMMON NN( 500),NP( 500),IL( 501),JL( 501),IJ( 500),NL( 500),
140        & JI(1000),KC(1000),KU(1000),KX(1000),JA(1000),IB(1000),LR(1000),
150        & LC(8),KA(12,2),KQ(9),IX(9),M,N,LEK,KAT,KOR,KTER,MINE,IFIN,KI,KO,K
160       1 IF (IJ(I).EQ.0) GO TO 70
170         IJ(I) = 0
180       2 DO 69 J=1,M
190      69 NL(J)=0
200      70 LER=0
210       5 IF (KC(K)) 10,20,30
220      10 IF(KX(K)-KU(K)) 50,40,60
230      30 IF(KX(K)) 50,40,60
240      20 IF(KX(K).LT.0) GO TO 50
250         IF (KX(K).GT.KU(K)) GO TO 60
260      40 RETURN
270      50 KI = JA(K)
280         KTER=I
290         NL(KI)=+K
300         GO TO 65
310      60 KI=I
320         KTER = JA(K)
330         NL(KI)=-K
340      65 CALL LABEL (KBR)
350         IF (KBR.EQ.0) GO TO 68
360      67 CALL BREAKT
370         GO TO 5
380      68 CALL RAISE
390      39 IF (LER) 40,5,40
400          END

READY
```

```
EDI LIS CUTOFF1

100         SUBROUTINE CUTOFF(I)
110C    DUMMY CUTOFF ROUTINE
120C     SET  I = 1 TO CUTOFF, SET I TO ANY OTHER NUMBER TO NOT CUTOFF
130         I=2
140         RETURN
150         END

READY
```

```
EDI LIS RAISET
100         SUBROUTINE RAISE
110C    RAISE NODE PRICES OF UNLABELED NODES RELATIVE TO LABELED
120         FILENAME NN,KA
125         FILENAME KOR,KO
130         COMMON NN( 500),NP( 500),IL( 501),JL( 501),IJ( 500),NL( 500),
140        & JI(1000),KC(1000),KU(1000),KX(1000),JA(1000),IB(1000),LK(1000),
150        & LC(8),KA(12,2),KQ(9),IX(9),M,N,LER,KAT,KOR,KTER,MINE,IFIN,KI,KO,K
160         LC(6) = LC(6) + 1
170         NDELTA = IFIN
180         I=1
190         DO 24 L =1,N
200           IF (L.GE.IL(I+1))  I=I+1
210           J = JA(L)
220           IF (NL(I).EQ.0) GO TO 20
230           IF (NL(J).NE.0) GO TO 24
240           IF (KX(L).GE.KU(L)) GO TO 24
250           GO TO 23
260     20    IF (NL(J).EQ.0) GO TO 24
270           IF (KX(L).LE.0) GO TO 24
280     23    NDELTA = MIN0(NDELTA,IABS(KC(L)))
290     24  CONTINUE
300         NDP = NDELTA
310         IF (NDELTA.NE.IFIN) GO TO 31
320         IF (KC(K).EQ.0.OR.ISIGN(1,NL(KI)).EQ.ISIGN(1,KC(K))) GO TO 51
330         NDELTA = IABS(KC(K))
340     31  I=1
350         DO 47 L=1,N
360           IF (L.GE.IL(I+1)) I=I+1
370           J=JA(L)
380           IF (NL(I).NE.0) GO TO 41
390           IF (NL(J).NE.0) KC(L)=KC(L)+NDELTA
400           GO TO 47
410     41    IF (NL(J).EQ.0) KC(L)=KC(L)-NDELTA
420     47  CONTINUE
430         IF (NL(KAT).EQ.0) GO TO 50
440C    REFERENCE NODE LABELED, ADD NDELTA TO UNLABELED NODES
450         DO 49 I=1,M
460           IF (NL(I).EQ.0) NP(I)=NP(I)+NDELTA
470     49  CONTINUE
480         GO TO 60
490     50  DO 55 I=1,M
500           IF (NL(I).NE.0) NP(I)=NP(I)-NDELTA
510     55  CONTINUE
520     60  CONTINUE
530C    TEST FOR OVERFLOW OF NODE PRICES HERE WHEN POSSIBLE
540C    SET  LER = -3  IF NODE PRICES OVERFLOW
550         IF(NDP.EQ.NDELTA.OR.KX(K).EQ.0.OR.KX(K).EQ.KU(K)) RETURN
560     51  LER = -1
570         RETURN
580         END

READY
```

```
EDI LIS BREAKT1

100         SUBROUTINE BREAKT
110C    LABELS BROKE THROUGH, INCREMENT FLOW
120         FILENAME NN,KA
125         FILENAME KQR, KQ
130         COMMON NN( 500),NP( 500),IL( 501),JL( 501),IJ( 500),NL( 500),
140       & JI(1000),KC(1000),KU(1000),KX(1000),JA(1000),IB(1000),LK(1000),
150       & LC(8),KA(12,2),KQ(9),IX(9),M,N,LEK,KAT,KQR,KTER,MINE,IFIN,KI,KQ,K
160         LC(5) = LC(5) +1
170C    FIND FLOW INCREMENT,  SET UP CIRCLE LIST IN IJ
180         MINE=IFIN
190         KT = KTER
200         DO 30 J =1,M
210           KP = NL(KT)
220           KK=IABS(KP)
230           IF (KP.GT.0) GO TO 22
240           KT=JA(KK)
250           IF (KC(KK).GE.0) GO TO 19
260           MINE = MINO(MINE,KX(KK)-KU(KK))
270           GO TO 28
280     19    MINE = MINO(MINE,KX(KK))
290           GO TO 28
300     22    KRP=JL(KT)
310           DO 23 KR=KRP,N
320             IF (IB(KR).EQ.KK) GO TO 24
330     23    CONTINUE
340     24    KT=JI(KR)
350           IF (KC(KK).GT.0) GO TO 26
360           MINE = MINO(MINE,KU(KK)-KX(KK))
370           GO TO 28
380     26    MINE = MINO(MINE,-KX(KK))
390     28    IJ(J) = KP
400           IF (KT.EQ.KTER) GO TO 40
410     30  CONTINUE
420     40  JJ=J
430         LC(7) = LC(7) + JJ
440C     INCREMENT CYCLE BY "MINE".
450         DO 43  J = 1,JJ
460           KK = IJ(J)
470           IF (KK.GT.0) GO TO 42
480           KK = IABS(KK)
490           KX(KK) = KX(KK) - MINE
500           GO TO 43
510     42    KX(KK) = KX(KK) + MINE
520     43  CONTINUE
530         DO  45  J=1,M
540           NL(J) = 0
550     45  CONTINUE
560         IJ(1) = 0
570         RETURN
580         END

READY
```

```
EDI LIS OUTPUT1

100       SUBROUTINE OUTPUT (KZ)
110C   PROBLEM OUTPUT
120       FILENAME NN, KA
130       FILENAME KOR, KO
140       FILENAME K2, STORE
150       COMMON NN( 500),NP( 500),IL( 501),JL( 501),IJ( 500),NL( 500),
160      & JI(1000),KC(1000),KU(1000),KX(1000),JA(1000),IB(1000),LH(1000),
170      & LC(8),KA(12,2),KQ(9),IX(9),M,N,LER,KAT,KOR,KTER,MINE,IFIN,KI,KO,K
180       REAL A1,A2,A3
190       DATA MNQ1/4HK    /,MNQ2/4H     /,MNQ3/4HN    /,MNQ4/4HCUT /,
200      & MNQ5/4HCUT*/,MNQ6/4H*    /
210       MZ=MNQ1
220       IF (LER.NE.0) MZ=MNQ2
230       IF (KZ.NE.0) WRITE(KO,99) KZ
240       CALL CUTOFF(KFX)
250       IF(KFX.EQ.1.AND.LC(2).NE.0)  LC(1)=1
260       INPUT, K2
261       INPUT, STORE
270       IF (LC(3).EQ.0) GO TO 12
280       WRITE(STORE,90)(KA(I,2),I=1,12)
290       WRITE (KO,89)
300    12 IF (LC(1).EQ.0) GO TO 41
310       IF (KQ(6).NE.0) GO TO 24
320       KQ(6) =1
330    24 WRITE (K2,90)(KA(I,2),I=1,12)
340       WRITE (KO,88)
350    41 A3=0.
360       LINE=0
370       I=1
380       DO 3 J=1,N
390         IF (J.GE.IL(I+1)) I=I+1
400         K=JA(J)
410         MX=MZ
420         MY=MNQ2
430         LLC=KC(J)+NP(I)-NP(K)
440         IF(KX(J).LT.LH(J).OR.KX(J).GT.KU(J).OR.KX(J).LT.KU(J).AND.
450      &    LLC.LT.0.OR.KX(J).GT.LH(J).AND.LLC.GT.0)  MX=MNQ3
460         A1=KC(J)
470         A2=KX(J)
480         A3=A3+A1*A2
490         IF (KZ.EQ.0) GO TO 16
500         IF(NL(I).NE.0.AND.NL(K).EQ.0) MY=MNQ5
510         IF(NL(I).EQ.0.AND.NL(K).NE.0) MY=MNQ4
520    16 IF (LC(1).EQ.0) GO TO 51
530       WRITE (K2,93)NN(I),NN(K),KC(J),KU(J),LH(J),KX(J)
```

```
540    51 IF (KQ(7).EQ.0) GO TO 56
550         IF (LINE.EQ.0) WRITE (KO,91)(KA(II,2),II=1,12)
560         LINE=LINE+1
570C   PRINT 50 LINES/PAGE
580         IF (LINE.EQ.50) LINE=0
590       WRITE (KO,94)NN(I),NN(K),KC(J),KU(J),LW(J),KX(J),LLC,MX,MY
600    56 IF (LC(3).EQ.0) GO TO 3
610       WRITE(STORE,93)NN(I),NN(K),KC(J),KU(J),LW(J),KX(J)
620     3 CONTINUE
630       IF (KQ(7).NE.0) WRITE(KO,196)
640       IF (LC(1).NE.0) WRITE(K2,96)
650       IF (LC(3).NE.0) WRITE(STORE,96)
660       DO 200 I=1,M
670         MY=NNQ2
680         IF (KZ.NE.0.AND.NL(I).NE.0) MY=NNO6
690         IF (LC(1).NE.0) WRITE(K2,95) NN(I),NP(I)
700         IF (KQ(7).NE.0) WRITE(KO,199) NN(I),NP(I),MY
710         IF (LC(3).NE.0.AND.NP(I).NE.0) WRITE(STORE,95)NN(I),NP(I)
720   200 CONTINUE
730       IF(LC(1).NE.0) WRITE(K2,97)
740       IF (KQ(7).NE.0) WRITE(KO,98)
750       IF (LC(3).NE.0) WRITE(STORE,97)
760       WRITE (KO,92) LC(5),LC(6),LC(7),LC(8)
770       WRITE (KO,999) A3
780       RETURN
790     88 FORMAT(27HOTHIS RUN OUTPUT TO FILE K2 )
800     89 FORMAT(30HOTHIS RUN OUTPUT TO FILE STORE)
810     90 FORMAT(12A6/4HARCS22X,4HCOST5X,5HUPPER5X,5HLOWER6X,4HFLOW,12X)
820     91 FORMAT(1H112A6/5H ARCS16X,4HCOST6X,5HUPPER6X,5HLOWER7X,4HFLOW7X,
830       & 4HCBAR/1X)
840     92 FORMAT(18HONO OF BREAKTHRUS=I12,22H, NO OF NONBREAKTHRUS=I12,18H,
850       &NO OF X CHANGES=I12,/42H NO OF NODES FROM WHICH LABELING WAS DONE=
860       &I12)
870     93 FORMAT(6X,2A6,2X,4I10)
880     94 FORMAT(2(1X,A6),5I11,1X,2A4)
890     95 FORMAT(6X,A6,6X,I12)
900     96 FORMAT (6HNODES ,54X)
910     97 FORMAT(3HEND,27X)
920     98 FORMAT(4H0END)
930    99 FORMAT(1H0I5,23H ARCS ARE OUT OF KILTER)
940    193 FORMAT(12HINODE PRICES/1X)
950    199 FORMAT(1X,A6,I13,A4)
960    999 FORMAT(16HOSUM OF PRODUCTS,1PD20.12)
970         END

READY
```

```
EDI LIS LABEL1

100         SUBROUTINE LABEL (KBR)
110C    LABEL NODES
120         FILENAME NN,KA
125         FILENAME KOR, KO
130         COMMON NN( 500),NP( 500),IL( 501),JL( 501),IJ( 500),NL( 500),
140        & JI(1000),KC(1000),KU(1000),KX(1000),JA(1000),IB(1000),LW(1000),
150        & LC(8),KA(12,2),KQ(9),IX(9),M,N,LER,KAT,KOR,KTER,MINE,IFIN,KI,KO,K
160C    JI FIRST NODE OF ARC IN SECOND NODE LIST
170C    KC COST
180C    KU UPPER BOUND
190C    KX FLOW
200C    JA SECOND NODE OF ARC IN NORMAL ORDER
210C    IB ARC NUMBER OF ARC IN SECOND NODE LIST
220C    LW LOWER BOND
230C    NN NODE NAME
240C    NP NODE PRICE
250C    IL FIRST ARC OF GIVEN NODE IN LIST OF ARCS ARRANGED NORMALLY
260C    JL FIRST ARC OF GIVEN NODE IN LIST OF ARCS ARRANGED IN SECOND NODE ORD
270C    IJ SCAN LIST (CIRCLE LIST IN "BREAKT")
280C    NL NODE LABEL.  SIGNED NUMBER OF ARC WHICH LABELED IT
290C    NUP CURRENT LENGTH OF SCAN LIST
300C    NU PRESENT LOCATION IN SCAN LIST OF NODE BEING SCANNED
310         KBR = 0
320         IF (IJ(1).EQ.0) NUP=1
330         IJ(1)=KI
340         NU  = 1
350     14 I=IJ(NU)
360C    SEARCH FORWARD ARCS
370         L2 = IL(I+1)
380         L  = IL(I)
390     16 IF  (L2.LE.L) GO TO 28
400         J = JA(L)
410         IF (NL(J).NE.0) GO TO 27
420         IF (KC(L).GT.0) GO TO 21
430         IF (KX(L).GE.KU(L)) GO TO 27
440         GO TO 22
```

```
450     21 IF (KX(L).GE.0) GO TO 27
460     22 NL(J) = L
470        NUP = NUP + 1
480        IJ(NUP) = J
490     27 IF=(U*EQ.KTER) GO TO 47
510        GO TO 16
520C  SEARCH BACKWARD ARCS
530     28 L2 = JL(I+1)
540        L  = JL(I)
550     31 IF (L2.LE.L) GO TO 43
560        J = JI(L)
570        IF (NL(J).NE.0) GO TO 42
580        KR = IB(L)
590        IF (KC(KR).GE.0) GO TO 36
600        IF (KX(KR).LE.KU(KR)) GO TO 42
610        GO TO 37
620     36 IF (KX(KR).LE.0) GO TO 42
630     37 NL(J) = -KR
640        NUP = NUP + 1
650        IJ(NUP) = J
660        IF  (J.EQ.KTER) GO TO 47
670     42 L = L+1
680        GO TO 31
690C    GO TO NEXT NODE IN SCAN LIST
700     43 IF (NU.GE.NUP) GO TO 48
710        NU = NU + 1
720        GO TO 14
730C     BREAK-THRU
740     47 KBR = 1
750     48 LC(S) = LC(S) +NU
760        RETURN
770        END

READY
```

```
EDI LIS LOOKUP1

100       FUNCTION LOOKUP(K)
110C   LOOK UP CONTROL NAME
120       LOGICAL EQUAL
130       REAL K
135       FILENAME KEY
140       DIMENSION KEY(19)
150       DATA KEY(1)/6HBEGIN /,KEY(2)/6HSAVE  /,KEY(3)/6HREFMOD/,
160      & KEY(4)/6HTAPE  /,KEY(5)/6HGO    /,KEY(6)/6HSKIP  /,
170      & KEY(7)/6HARCS  /,KEY(8)/6HMODES /,KEY(9)/6HOUTPUT/,
180      & KEY(10)/6H TAPE /,KEY(11)/6H IF CU/,KEY(12)/6H PUNCH/,
190      & KEY(13)/6HSOLVE /,KEY(14)/6HGOGO  /,KEY(15)/6HQUIT  /,
200      & KEY(16)/6HEND   /,KEY(17)/6H      /,KEY(18)/6HALTER /
210       DATA KEY(19)/6H NO SY/
220       LOOKUP = 20
230       DO 1 I = 1,19
240         IF(EQUAL(KEY(I),K))GO TO 2
250     1 CONTINUE
260       RETURN
270     2 LOOKUP = I
280       RETURN
290       END

READY
```

```
EDI LIS EQUAL1

100       LOGICAL FUNCTION EQUAL(J,K)
110C   SYSTEM/GE ROUTINE
120C   TRICK SYSTEM/GE INTO COMPARING 6 BYTE WORDS
130       DIMENSION J(2),K(2)
140       EQUAL=.FALSE.
150       IF (J(1).NE.K(1)) RETURN
160C         TRUNCATION ON GE VALID ONLY FOR POSITIVE NUMBERS
170       JJ=J(2)/65536
180       IF(65536*JJ.GT.J(2).AND.J(2).LT.0) JJ=JJ-1
190       KK=K(2)/65536
200       IF(65536*KK.GT.K(2).AND.K(2).LT.0) KK=KK-1
210       IF (JJ.EQ.KK) EQUAL=.TRUE.
220       RETURN
230       END

READY
```

5.7 Model Validation

The model was validated against the existing Oklahoma City network (see Figure 5-5). The output for this run is shown on the next page. The runs for future networks are not shown because the data used to formulate them was not obtained from actual land use projections and was used only to validate the gaming capabilities.

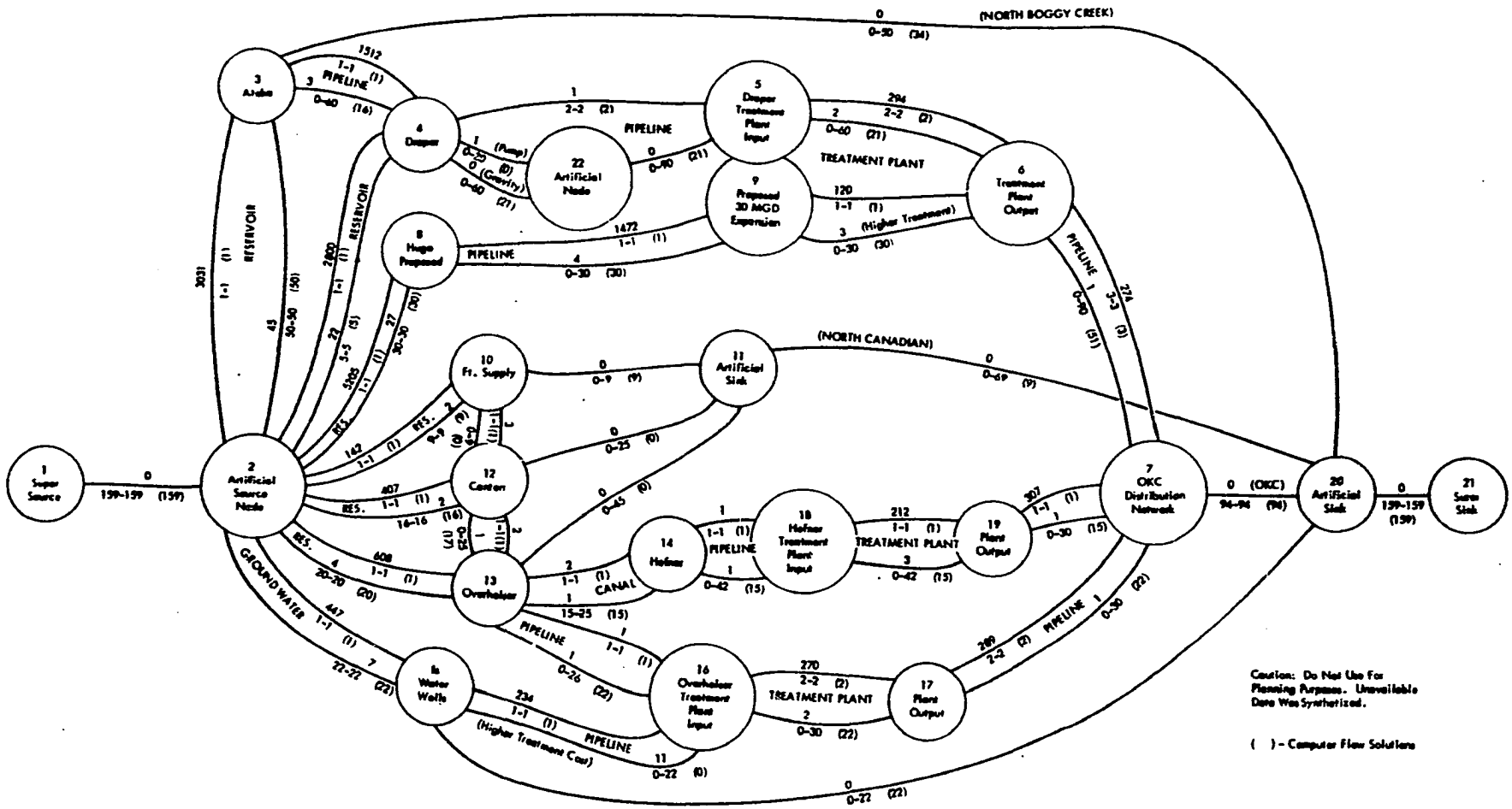

Figure 5-5. Average Daily Flow Net (1980)

```
BEGIN
 OKC RUN 2
ARCS
 SOLVE
 NO OF ARCS=    58 NO OF NODES=    22
1 OKC RUN 2
 ARCS                    COST       UPPER       LOWER        FLOW        CBAR

 SS 1    AS 2             0         159         159         159          7 K
 AS 2    ATOKA3        3031           1           1           1       3030 K
 AS 2    ATOKA3          45          50          50          50         44 K
 AS 2    DRAP 4        2800           1           1           1       2796 K
 AS 2    DRAP 4          22           5           5           5         18 K
 AS 2    HUGO 8        5205           1           1           1       5205 K
 AS 2    HUGO 8          27          30          30          30         27 K
 AS 2    FTSY10         142           1           1           1        141 K
 AS 2    FTSY10           2           9           9           9          1 K
 AS 2    CAN 12         407           1           1           1        405 K
 AS 2    CAN 12           2          16          16          16          0 K
 AS 2    OVH 13         608           1           1           1        605 K
 AS 2    OVH 13           4          20          20          20          1 K
 AS 2    MM  15         447           1           1           1        446 K
 AS 2    MM  15           7          22          22          22          6 K
 ATOKA3  DRAP 4        1512           1           1           1       1509 K
 ATOKA3  DRAP 4           3          60           0          16          0 K
 ATOKA3  ASSK20           0          60           0          34          0 K
 DRAP 4  DRAP 5           1           2           2           2          1 K
 DRAP 4  AN  22           1          30           0           0          1 K
 DRAP 4  AN  22           0          60           0          21          0 K
 AN  22  DRAP 5           0          90           0          21          0 K
 HUGO 8  DTPE 9        1472           1           1           1       1468 K
 HUGO 8  DTPE 9           4          30           0          30          0 K
 FTSY10  CAN 12           3           1           1           1          2 K
 FTSY10  CAN 12           1           9           0           0          0 K
 FTSY10  AS  11           0           9           0           9          0 K
 CAN 12  OVH 13           2           1           1           1          1 K
 CAN 12  OVH 13           1          25           0          17          0 K
 CAN 12  AS  11           0          25           0           0          1 K
 OVH 13  OTP 16           1           1           1           1          0 K
 OVH 13  OTP 16           1          26           0          22          0 K
 OVH 13  HEF 14           2           1           1           1          3 K
 OVH 13  HEF 14           1          25          15          15          2 K
 OVH 13  AS  11           0          45           0           0          2 K
 HEF 14  HTP 18           1           1           1           1          0 K
 HEF 14  HTP 18           1          42           0          15          0 K
 MM  15  OTP 16         234           1           1           1        231 K
 MM  15  OTP 16          11          22           0           0          8 K
 MM  15  ASSK20           0          22           0          22          0 K
 DRAP 5  DRAP 6         294           2           2           2        292 K
 DRAP 5  DRAP 6           2          60           0          21          0 K
```

```
 DTPE 9 DRAP 6          120          1          1          1        118 K
 DTPE 9 DRAP 6            2         30          0         30          0 K
 AS  11 ASSK20            0         69          0          9          0 K
 OTP 16 OTP 17          270          2          2          2        268 K
 OTP 16 OTP 17            2         30          0         22          0 K
 HTP 18 HTP 19          212          1          1          1        209 K
 HTP 18 HTP 19            3         42          0         15          0 K
 DRAP 6 OKC  7          274          3          3          3        273 K
 DRAP 6 OKC  7            1         90          0         51          0 K
 OTP 17 OKC  7          289          2          2          2        288 K
 OTP 17 OKC  7            1         30          0         22          0 K
 HTP 19 OKC  7          307          1          1          1        306 K
 HTP 19 OKC  7            1         30          0         15          0 K
 OKC  7 ASSK20            0         94         94         94          6 K
 ASSK20 SSK 21            0        159        159        159         -6 K
 SSK 21 SS 1              0        159        159        159          0 K
INODE PRICES

 SS 1              0
 AS 2             -7
 ATOKA3           -6
 DRAP 4           -3
 AN  22           -3
 HUGO 8           -7
 FTSY10           -6
 CAN 12           -5
 OVH 13           -4
 HEF 14           -5
 MI  15           -6
 DRAP 5           -3
 DTPE 9           -3
 AS  11           -6
 OTP 16           -3
 HTP 18           -4
 DRAP 6           -1
 OTP 17           -1
 HTP 19           -1
 OKC  7            0
 ASSK20           -6
 SSK 21            0
OEND
ONO OF BREAKTHRUS=          25, NO OF NONBREAKTHRUS=          12, NO OF X CHANGES=          162
 NO OF NODES FROM WHICH LABELING WAS DONE=          395
OSUM OF PRODUCTS  2.3006000000000+04


READY
```

CHAPTER VI

SEWER NETWORK MODEL

6.1 Introduction

Since the same procedures and network models are used for both water and sewerage systems, the general discussion of the technical process was presented in Chapter V, Water Network Model. Consequently, one should review and refer to Chapter V prior to the reading of this chapter. This was done because the procedures were lengthy and would have been redundant if presented again. The only thing that will be discussed in this chapter is the philosophical and technical differences that the sewerage network creates in the application of the preceeding presentation.

The flow charts, data arrangement,and model listings are identical to those in Chapter V and will only be referenced in this chapter. The remainder of this chapter will be devoted to the explanation of the techniques used to operate the "model" as a sewerage network model.

As previously discussed, the first phase is the isolation of the feasible independent networks and the reduction of the problem to its simplest form. The first step is to reduce the network to the "real" network by identifying the unfeasible alternatives and eliminating them from the network. This is a course screening done by the best qualified people. The independent networks are then evaluated using engineering cost data analysis.

The interconnected networks or the alternate solutions that interconnect independent solutions are evaluated by loading the system onto the computer and evaluating them with the network model. The flexibility that was built

into the model for the water network analysis is preserved for the evaluation of the sewer system.

6.2 Network Formulation

The sewerage network varies from the water network in that it is primarily a gravity flow system. The use of pumps, pressurized lines and lift stations are normally avoided and are only implemented when absolutely necessary.

The sewerage network begins within each small basin with a collector system. These grid or block by block collector networks are sized by using the technique described in Appendix C (14), Water, Sewer, and Storm Drainage Micro Area Requirements. The sewage then flows from the collector systems into the sewer mains. These mains are also designed using the technique described in Appendix C (14). It is not the purpose of this study to design and plan for this portion of the sewerage network, although a procedure was given in Appendix C (14).

The design of the collector systems that serve these smaller basins is the responsibility of the political jurisdictions involved. The portion of the system that this study does deal with is the collection of the sewage from these smaller basins and political jurisdictions, its transportation to a system of treatment plants, and finally the discharge of the effluent into a receiving stream.

It is also not the purpose of this study to develop a stream recovery model that examines in detail the effect that the effluent will have on the receiving streams. The way that the network model does take this into consideration is by limiting the upper bounds of the arc that connects the outfall of a treatment plant to the receiving stream to a value of effluent that the stream can handle. This value is obtained by using methods Appendix D,

Water Quality (14). By controlling the amount of effluent based on a specified level of treatment for the study area, in this case secondary, that can be discharged at different points, the quality of the receiving streams can be maintained. This can even be made seasonal by changing these values based in the seasonal flows and characteristics of each receiving stream.

The sewerage model examines all of these feasible alternatives for the region and optimizes them into a regional sewer network. It is also possible, if not probable, as in ACOG, that the region is made up of several major basins of different characteristics that are not connected within the study area (see Figure 6-1). These basins may be analyzed separately, or, as in the example for the study area, be analyzed by interconnecting two or more of the basins.

There is also the capability of the using agency to evaluate the alternatives of having one major treatment plant or any combination of smaller treatment plants. The portion of the study that was selected as an illustrative example combines all of the above possibilities. The example problem looks at the feasibility of connecting two major basins, the Deep Fork and the North Canadian Rivers, by a lift station to one metro-treatment plant or by serving each basin by a selection of smaller treatment plants. The problem is illustrated in sections 6.4, 6.5, and 6.6.

The procedure for formulating the sewer network is identical to that described in Section 5.2 of the preceding chapter. The first step is to established the current network from the inventory data. The procedures and firms used are the same as before. The only difference between this phase, which is for the sewer networks, and those for water is that the flow is

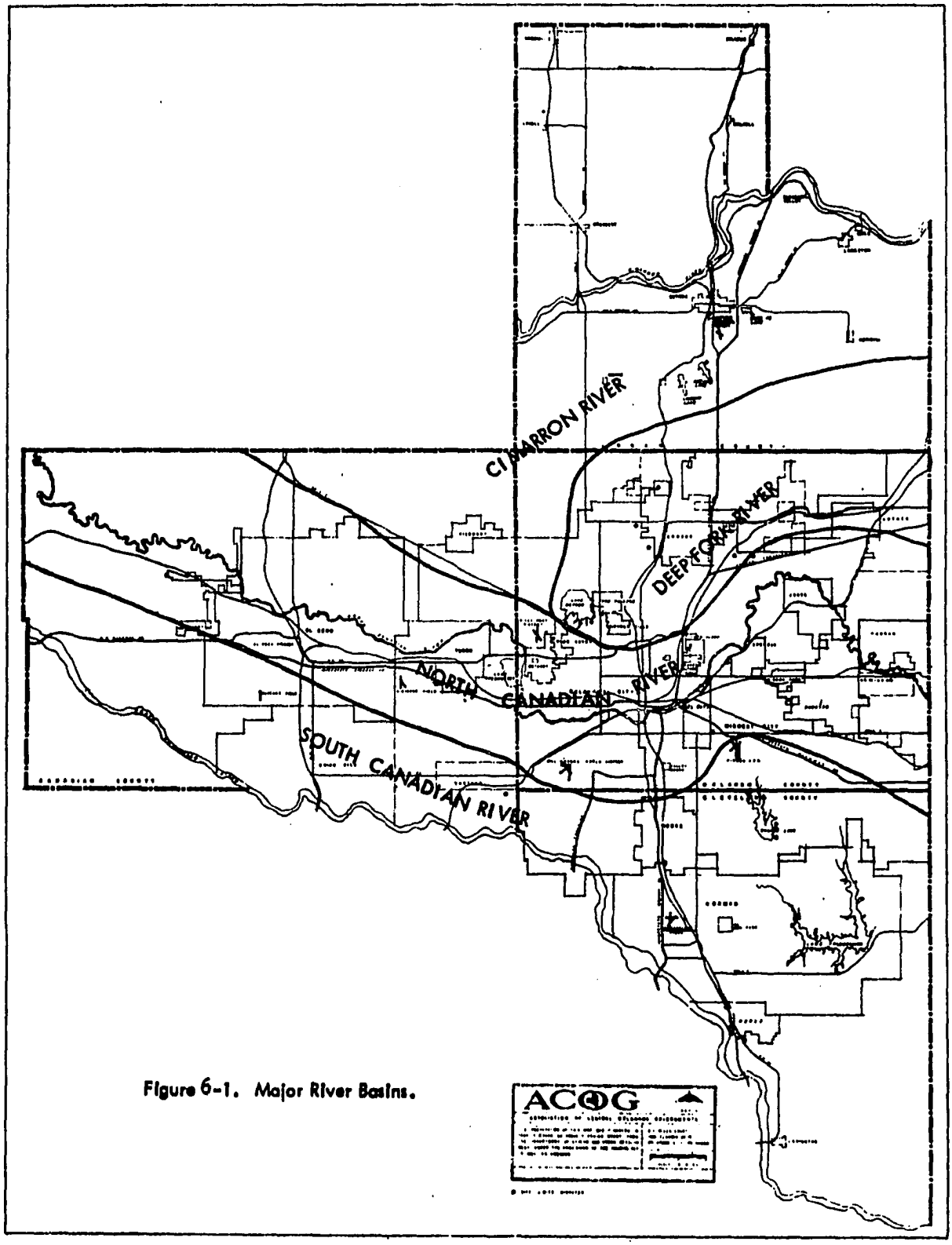

Figure 6-1. Major River Basins.

reversed. The use of special areas, mainly basins, within each political area is greatly increased. This allows the demand portion of the model to work within the framework of gravity flow across corporate boundaries.

The identification of the real network and its shortages and capabilities is handled in the same manner as water. It is also advanced into the "desirable" worlds and evaluated as to their incremental capabilities, deficiencies, and availabilities using those techniques described in Section 5.2.

At the conclusion of this procedure, the using agency will have a complete understanding of the sewer networks, their requirements, and feasible alternatives for the region under study. The problem will have again been reduced to its simplest form and be ready for presentation to the committee of concerned agencies for final selection of the alternatives that they may wish to analyze further. Each choice will then be modeled for the selection of the best alternatives which will then be incorporated into the final plan.

6.3 Model Description

The model again varies with the type of network under consideration. If it is a simple independent network, the use of derived cost functions are used, but if it is a complicated independent or interconnected network, then the computer model is employed.

When the computer model is run, it is used in the same manner as that of the water network. The same model is employed by both networks. The network is again made up of nodes and arcs. Each facility is represented by a node for the inlet and another node for outlet. If a fixed cost is encountered in this facility, it is represented by an arc with a fixed "fake flow", usually one MGD. If the conservation of flow changes this fake flow to another

value, then the fixed cost is reduced proportionately. Another arc is used to represent that portion of the cost, above fixed cost, that which varies linearly with flow. A system of cost lines are developed for each type of facility as shown in Figure 5-3. These arcs and nodes with their derived cost functions can be used to depict accurately any type of facility (see page 178). The use of these dual nodes and multi-arcs is limited only by the users abilities to depict each facility by its proper combination of arcs.

If the network under consideration is a simple independent network, it can be handled using cost functions similar, in many cases identical, to those used in the water network. The equations for transmission, pipeline, and right-of-way costs are the same. The remainder of the costs for the system as acquired form the same sources as those for the computer model data requirements (see Section 6.4).

It can be seen that this modeling technique has a tremendous advantage in that it is not only highly flexible, but can be used for both water and sewer networks. This study group is also working with it in transportation and stream recovery modeling. Flow charts are shown in Section 5.3.

6.4 Data Requirements

The data requirements for this model are the same as those required for the water network. The only difference is in the cost curves and functions used to provide the actual costs. It is obvious that these cost data are available from many sources and those that are used here are not considered as absolute. The user agency should use those functions that it feels are most accurate. The functions that the author uses are obtained from those

listed in the Bibliography (31, 32, 33, 34, and 35).

6.5 Data Arrangement

The data are arranged in groups of links or arcs for each pair of nodes. All links from each source node must be listed in groups. The format is the same as that shown in Section 5.5. A listing for the runs used to compare the utilization of a single metro-plant for two river basins, versus several treatment plants in each basin is shown in Section 6.7.

6.6 Model Format

The model listing is the same as that shown in Section 5.6.

6.7 Model Validation

There were many runs made of different arrangements for the network. The run selected is shown in Figure 6.2. The output, which follows, shows that the metro-plant is a more economical solution to the problem than the multi-plant alternative. This example is not a true representation of the problem due to the lack of accurate cost data for the actual system. This could be accurately determined under the conditions and funding of a full study of the region.

The true validation of this model has been accomplished, and its full usefulness is only limited by the skill of the using agency in depicting the system and alternatives in modeling nomenclature. Once a proper set of cost functions for their systems have been developed and projected (this study used the ENR cost index), the optimization of the network will be obtained.

```
BEGIN
 OKC SEWAGE

ARCS     SS 1  AN 2              0          66          0
         AN 2 NDFD24              0          26         26
         AN 2 IFPN 4              0          40         40
         AN 2 CNNC 3              0          40          0
        NDFD24PTP 25            212          26          0
        NDFD24PLS 27             40           1          1
        NDFD24PLS 27              9          25         25
        PTP 25PTPO26           2180           1          0
        PTP 25PTPO26             86          25          0
        PTPO26DFR 10              0          26          0
        DFR 10NCR  8              0          26          0
        PLS 27OFPN 5            380           1          0
        PLS 27OFPN 5             20          25          0
        IFPN 4OFPN 5            638           6          0
        IFPN 4OFPN 5            173          34          0
        OFPN 5PJNP 6              0           7          0
        OFPN 5PJNP 6              0          59          0
        PJNP 6PJPO 7            769           7          0
        PJNP 6PJPO 7             45          59          0
        PJPO 7DFR 10            247           1          0
        PJPO 7DFR 10              8          25          0
        PJPO 7NCR  8              0           6          0
        PJPO 7NCR  8              0          34          0
        CNNC 3JYOK11              0           5          0
        CNNC 3NMUS12              0           2          0
        CNNC 3NWOK13              0           2          0
        CNNC 3SSP 14              0          26          0
        CNNC 3SWOK15              0           2          0
        CNNC 3DELC16              0           3          0
        JYOK11 OF 17           2180           1          0
        JYOK11 OF 17            240           4          0
        NMUS12 OF 18            183           1          0
        NMUS12 OF 18            458           1          0
        NWOK13 OF 19            183           1          0
        NWOK13 OF 19            458           1          0
        SSP 14 OF 20           2180           1          0
        SSP 14 OF 20             86          25          0
        SWOK15 OF 21            183           1          0
        SWOK15 OF 21            458           1          0
        DELC16 OF 22           2180           1          0
        DELC16 OF 22            458           2          0
         OF 17 AN 23              0           5          0
         OF 18 AN 23              0           2          0
         OF 19 AN 23              0           2          0
         OF 20 AN 23              0          26          0
         OF 21 AN 23              0           2          0
         OF 22 AN 23              0           3          0
         AN 23NCR  8              0          40          0
        NCR  8 SSK 9              0          66          0
         SSK 9 SS 1               0          66         66

END.
SOLVE
QUIT

READY
```

```
BEGIN
 OKC SEWAGE
ARCS
        SS 1  AN 2              0          66          0
        AN 2 NDFB24             0          26         26
        AN 2 IFPN 4             0          40          0
        AN 2 CNNC 3             0          40         40
      NDFB24PTP 25            212          26         26
      NDFB24PLS 27             40           1          0
      NDFB24PLS 27              9          25          0
      PTP 25PTP026           2180           1          0
      PTP 25PTP026             86          25          0
      PTP026DFR 10              0          26          0
      DFR 10NCR  8              0          26          0
      PLS 27OFPN 5            380           1          0
      PLS 27OFPN 5             20          25          0
      IFPN 40FPN 5            638           6          0
      IFPN 40FPN 5            173          34          0
      OFPN 5PJMP 6              0           7          0
      OFPN 5PJMP 6              0          59          0
      PJMP 6PJPO 7            769           7          0
      PJMP 6PJPO 7             45          59          0
      PJPO 7DFR 10            247           1          0
      PJPO 7DFR 10              8          25          0
      PJPO 7NCR  8              0           6          0
      PJPO 7NCR  8              0          34          0
      CNNC 3JYOK11              0           5          0
      CNNC 3NMUS12              0           2          0
      CNNC 3NWOK13              0           2          0
      CNNC 3SSP 14              0          26          0
      CNNC 3SWOK15              0           2          0
      CNNC 3DELC16              0           3          0
      JYOK11 OF 17           2180           1          0
      JYOK11 OF 17            240           4          0
      NMUS12 OF 18            183           1          0
      NMUS12 OF 18            458           1          0
      NWOK13 OF 19            183           1          0
      NWOK13 OF 19            458           1          0
      SSP 14 OF 20           2180           1          0
      SSP 14 OF 20             86          25          0
      SWOK15 OF 21            183           1          0
      SWOK15 OF 21            458           1          0
      DELC16 OF 22           2180           1          0
      DELC16 OF 22            458           2          0
       OF 17 AN 23              0           5          0
       OF 18 AN 23              0           2          0
       OF 19 AN 23              0           2          0
       OF 20 AN 23              0          26          0
       OF 21 AN 23              0           2          0
       OF 22 AN 23              0           3          0
       AN 23NCR  8              0          40          0
      NCR  8 SSK 9              0          66          0
       SSK 9 SS 1               0          66         66
END
SOLVE
QUIT

READY
```

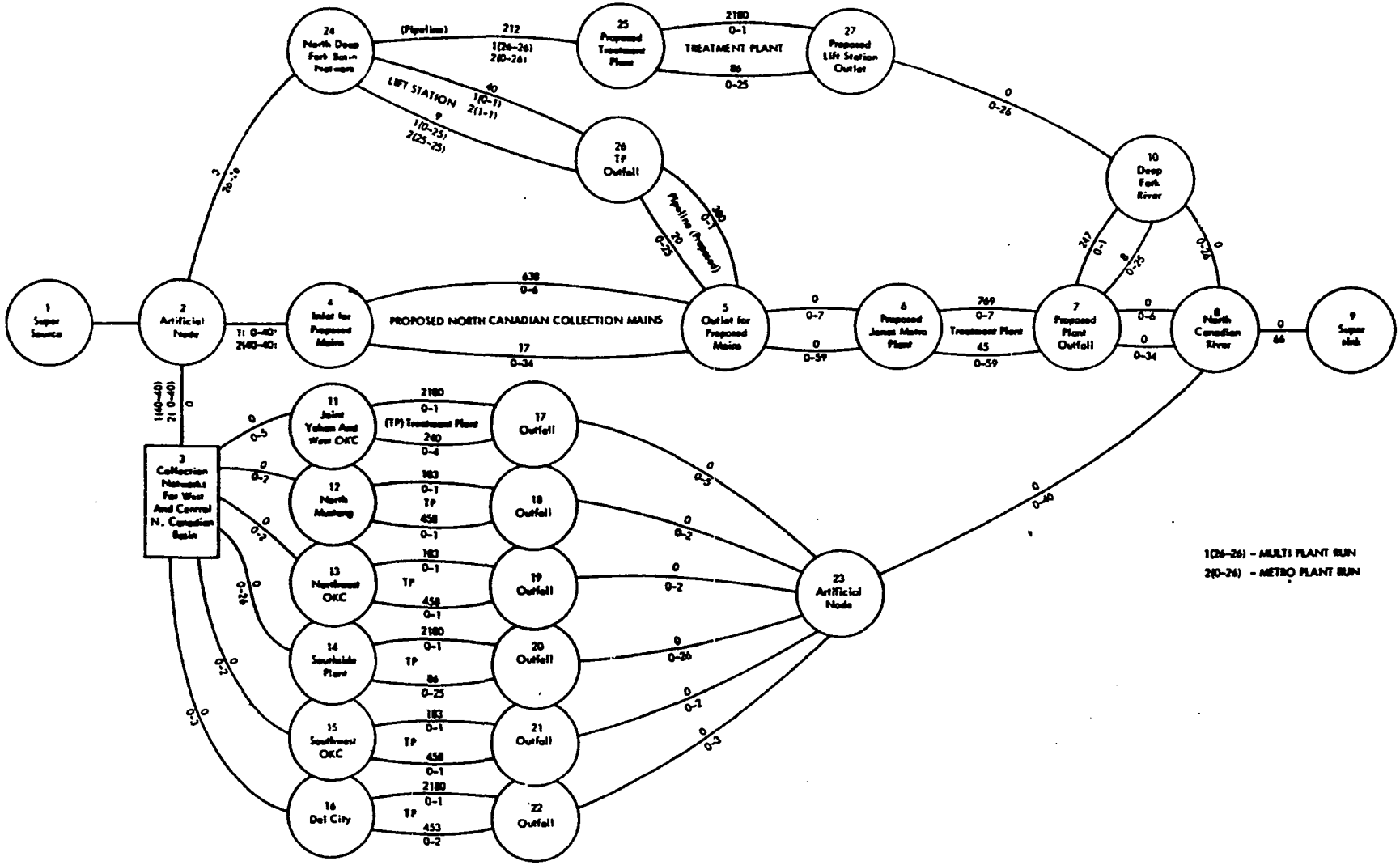

Figure 6.2. North Canadian River Basin (Plant Selection)

BEGIN
 OKC SEWAGE
ARCS
 SOLVE
 NO OF ARCS= 50 NO OF NODES= 27
1 OKC SEWAGE
 ARCS

		COST	UPPER	LOWER	FLOW	CBAR
SS 1	AN 2	0	66	0	66	0 K
AN 2	NDFB24	0	26	26	26	86 K
AN 2	IFPH 4	0	40	0	0	0 K
AN 2	CNNC 3	0	40	40	40	2192 K
NDFB24	PTP 25	212	26	26	26	2318 K
NDFB24	PLS 27	40	1	0	0	31 K
NDFB24	PLS 27	9	25	0	0	0 K
PTP 25	PTP026	2180	1	0	1	0 K
PTP 25	PTP026	86	25	0	25	-2094 K
PTP026	OFR 10	0	26	0	26	0 K
OFR 10	NCR 8	0	26	0	26	0 K
PLS 27	OFPH 5	380	1	0	0	360 K
PLS 27	OFPH 5	20	25	0	0	0 K
IFPH 4	OFPH 5	638	6	0	0	695 K
IFPH 4	OFPH 5	173	34	0	0	230 K
OFPH 5	PJNP 6	0	7	0	0	0 K
OFPH 5	PJNP 6	0	59	0	0	0 K
PJNP 6	PJPO 7	769	7	0	0	724 K
PJNP 6	PJPO 7	45	59	0	0	0 K
PJPO 7	OFR 10	247	1	0	0	247 K
PJPO 7	OFR 10	8	25	0	0	8 K
PJPO 7	NCR 8	0	6	0	0	0 K
PJPO 7	NCR 8	0	34	0	0	0 K
CNNC 3	JYOK11	0	5	0	5	0 K
CNNC 3	NMUS12	0	2	0	2	-1722 K
CNNC 3	NMOK13	0	2	0	2	-1722 K
CNNC 3	SSP 14	0	26	0	26	0 K
CNNC 3	SHOK15	0	2	0	2	-1722 K
CNNC 3	DELC16	0	3	0	3	0 K
JYOK11	OF 17	2180	1	0	1	0 K
JYOK11	OF 17	240	4	0	4	-1940 K
NMUS12	OF 18	183	1	0	1	-275 K
NMUS12	OF 18	458	1	0	1	0 K
NMOK13	OF 19	183	1	0	1	-275 K
NMOK13	OF 19	458	1	0	1	0 K
SSP 14	OF 20	2180	1	0	1	0 K
SSP 14	OF 20	86	25	0	25	-2094 K
SHOK15	OF 21	183	1	0	1	-275 K
SHOK15	OF 21	458	1	0	1	0 K

```
 DELC16  OF 22        2180          1          0          1          0 K
 DELC16  OF 22         458          2          0          2      -1722 K
  OF 17  AN 23           0          5          0          5          0 K
  OF 18  AN 23           0          2          0          2          0 K
  OF 19  AN 23           0          2          0          2          0 K
  OF 20  AN 23           0         26          0         26          0 K
  OF 21  AN 23           0          2          0          2          0 K
  OF 22  AN 23           0          3          0          3          0 K
  AN 23 NCR  8           0         40          0         40          0 K
 NCR  8  SSK 9           0         66          0         66        -12 K
  SSK 9  SS 1            0         66         66         66          0 K
NODE PRICES

  SS 1              0
  AN 2              0
 NOF624           -86
 PTP 25         -2192
 PTP026           -12
 OFR 10           -12
 PLS 27           -77
 IFPN 4             0
 LFPN 5           -57
 PJNP 6           -57
 PJPO 7           -12
 CNNC 3         -2192
 JYOK11         -2192
 NNUS12           -470
 NNOK13           -470
 SSP 14         -2192
 SNOK15           -470
 DELC16         -2192
  OF 17           -12
  OF 18           -12
  OF 19           -12
  OF 20           -12
  OF 21           -12
  OF 22           -12
  AN 23           -12
 NCR  8           -12
  SSK 9             0
OEND
ONO OF BREAKTHRUS=          20, NO OF NONBREAKTHRUS=          11, NO OF X CHANGES=          167
 NO OF NODES FROM WHICH LABELING WAS DONE=          402
OSUM OF PRODUCTS  2.233100000000D+04

READY
```

```
BEGIN
 OKC SEWAGE
ARCS
 SOLVE
 NO OF ARCS=    50 NO OF NODES=    27
1 OKC SEWAGE
 ARCS                    COST       UPPER       LOWER        FLOW       CBAR

  SS 1    AR 2              0          66           0          66          0 K
  AR 2  NDFB24              0          26          26          26        298 K
  AR 2  IFPH 4              0          40          40          40       1654 K
  AR 2  CHKC 3              0          40           0           0          0 K
NDFB24  PTP 25            212          26           0           0          0 K
NDFB24  PLS 27             40           1           1           1       1138 K
NDFB24  PLS 27              9          25          25          25       1107 K
PTP 25  PTPO26           2180           1           0           0       2094 K
PTP 25  PTPO26             86          25           0           0          0 K
PTPO26  DFR 10              0          26           0           0          0 K
DFR 10  NCR  8              0          26           0          26          0 K
PLS 27  OFPH 5            380           1           0           1          0 K
PLS 27  OFPH 5             20          25           0          25       -360 K
IFPH 4  OFPH 5            638           6           0           6          0 K
IFPH 4  OFPH 5            173          34           0          34       -465 K
OFPH 5  PJMP 6              0           7           0           7          0 K
OFPH 5  PJMP 6              0          59           0          59          0 K
PJMP 6  PJPO 7            769           7           0           7          0 K
PJMP 6  PJPO 7             45          59           0          59       -724 K
PJPO 7  DFR 10            247           1           0           1          0 K
PJPO 7  DFR 10              8          25           0          25       -239 K
PJPO 7  NCR  8              0           6           0           6       -247 K
PJPO 7  NCR  8              0          34           0          34       -247 K
CHKC 3  JYOK11              0           5           0           0          0 K
CHKC 3  NRUS12              0           2           0           0          0 K
CHKC 3  NROK13              0           2           0           0          0 K
CHKC 3  SSP 14              0          26           0           0          0 K
CHKC 3  SROK15              0           2           0           0          0 K
CHKC 3  DELC16              0           3           0           0          0 K
JYOK11   CF 17           2180           1           0           0       2180 K
JYOK11   CF 17            240           4           0           0        240 K
NRUS12   CF 18            183           1           0           0        183 K
NRUS12   CF 18            458           1           0           0        458 K
NROK13   CF 19            183           1           0           0        183 K
NROK13   CF 19            458           1           0           0        458 K
SSP 14   CF 20           2180           1           0           0       2180 K
SSP 14   CF 20             86          25           0           0         86 K
SROK15   CF 21            183           1           0           0        183 K
SROK15   CF 21            458           1           0           0        458 K
DELC16   CF 22           2180           1           0           0       2180 K
DELC16   CF 22            458           2           0           0        458 K
```

```
 OF 17  AN 23          0          5          0          0          0 K
 OF 18  AN 23          0          2          0          0          0 K
 OF 19  AN 23          0          2          0          0          0 K
 OF 20  AN 23          0         26          0          0          0 K
 OF 21  AN 23          0          2          0          0          0 K
 OF 22  AN 23          0          3          0          0          0 K
 AN 23 NCR  8          0         40          0          0          0 K
NCR  8  SSK 9          0         66          0         66          0 K
 SSK 9  SS 1           0         66         66         66          0 K
1NODE PRICES

 SS 1              0
 AN 2              0
NDFB24          -298
PTP 25           -86
PTPO26             0
OFR 10             0
PLS 27         -1396
IFPN 4         -1654
OFPN 5         -1016
PJNP 6         -1016
PJPO 7          -247
CNNC 3             0
JYOK11             0
NNUS12             0
NNOK13             0
SSP 14             0
SNOK15             0
DELC16             0
 OF 17             0
 OF 18             0
 OF 19             0
 OF 20             0
 OF 21             0
 OF 22             0
 AN 23             0
NCR  8             0
 SSK 9             0
OEND
ONO OF BREAKTHRUS=          9, NO OF NONBREAKTHRUS=          11, NO OF X CHANGES=          78
 NO OF NODES FROM WHICH LABELING WAS DONE=          108
OSUM OF PRODUCTS  1.9340000000000+04


READY
HEL
0073.44  CRU    0003.34  TCH    0121.65  KC

U#=
```

CHAPTER VII

DEVELOPMENT OF THE WATER AND SEWER PLAN

7.1 Introduction

It was the prime objective of this research project to provide the average planning group with a usable model for Regional water and sewerage planning networks. We feel this objective has been accomplished. The model we have developed fulfills all of the originally stated objectives.

All models developed are operational and are presented in their true configurations. Examples of the input and output for each stage have been presented for validation when being loaded on other hardware. It is the authors' opinion that any planning agency can use this system with very little effort and without the addition of new technical personnel.

The model starts with the required inventories and then lists the procedures for establishing this data into usable information systems. It then asks the planning group to intervene by establishing the growth parameters in the population model. This allows the using agency to tell the model for what goals the region would like to strive. The population model then provides the planner several population profile alternatives in five year increments for each of these alternatives (see Figure 7-1).

Again the planner is required to made additional input into the model by allocating the population profile for each alternative into an areal scheme. In other words, the planner develops a land use plan or plans for each set of goals and analytical alternatives under consideration.

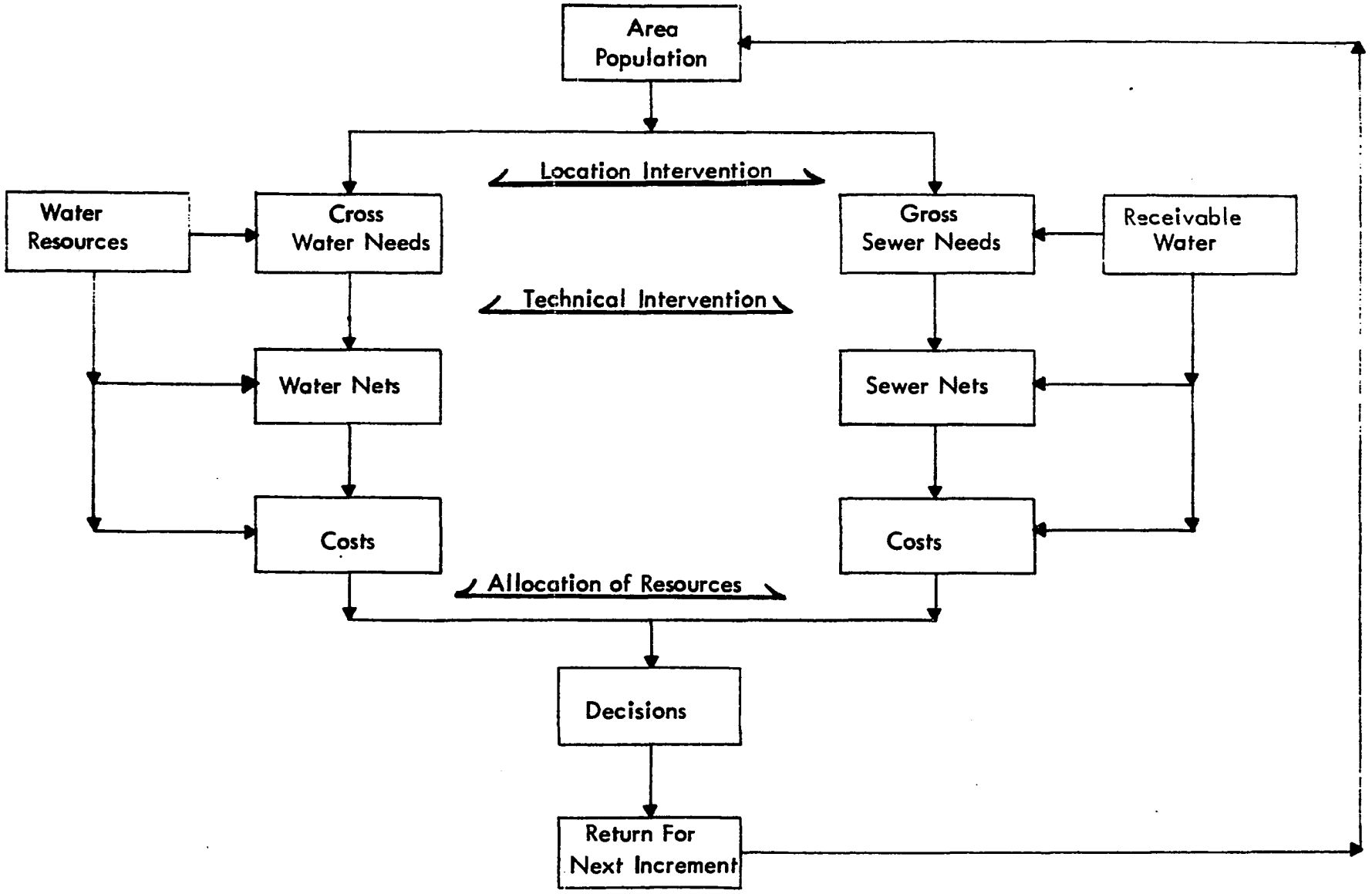

Figure 7 -1. Final Procedure Outline.

After the land use has been allocated to the SAU's the user group sets up and runs the demand model. This model takes the population and land use that were developed by the planner and computes the water requirements and sewage outputs for several adjustable configurations, such as political jurisdiction, basin, special area, etc.

The appropriate planning group is then asked to made another intervention. He is required to take the output from the demand model and the inventory of the existing and proposed facilities and create the networks for each time increment that is to be evaluated further. He is required, by a given procedure, to reduce this problem to its simplest form before evaluation by the network models.

The alternatives for both water and sewage which are to be run on the network model are then depicted by a link-node process. The alternatives are then loaded onto the network model and reevaluated. The result is the optimization of flow at the least cost.

At this point the model has completed all necessary information for the development of the final plan. There only remains to be done that portion which takes the cost of all the desirable alternatives and incrementally evaluates them against the financial structure of the region. The final step is to establish the priorities for the development of the alternatives that were selected for implementation.

7.2 Analysis of Alternatives

The process of financial analysis of these alternatives is a relatively simple procedure that follows the standard techniques used in economics. A profile of the financial structure including bond debt limits and future

financial resources is developed. This analysis is done on an incremental basis using the same steps as the models. The cost of each of the alternatives is then evaluated against the financial profile, and priorities are set by the committee of concerned agencies. The net result is the capital investment profile of the region to obtain the selected goals.

The process, as described in this report leads to a comprehensive and continuing planning model. The output can be easily developed into a plan that will maximize the use of our natural resources, help protect our environment and preserve the quality of life that is desired.

7.3 Limitations and Future Research Needed

The primary limitation to this model, as well as most others, is the availability of data, particularly cost functions. It is possible to develop the simplest link-node configuration for each type of equipment or facility in the system. After the configuration is complete, then cost functions can be developed for each type and common manufacturer of the equipment. These packages can then be placed into the input-like building blocks. This would greatly facilitate the use of the network model for gaming alternatives.

The fact that research has shown that non-linear cost functions of any order can be represented, the full capabilities of this model have not been reached. This model can very easily be expanded to include solid waste, stream control, air pollution, or transportation, to name but a few. The full potential should be developed, because the use of a single technique for so many functions of urban planning is invaluable.

The only other limitation is, as always, the development of a usable and general land use model, one that would bridge the tedious step from the

population model to the demand model. What is needed is a model that evaluates old neighborhoods on an incremental basis and allocates the proper portion of the population model to them. It should also take the difference and compute the new neighborhoods and industrial areas needed to support this growth. The planner would then only have to intervene by allocating the different types of neighborhoods to the land before proceeding to the demand model.

The development of these areas would then give the using agency a model that could be used to depict completely the urban development of the region using a minimum of computerized models---a most desirable goal.

Bibliography

1. Dorfman, Robert, "Formal Models in the Design of Water Resource System, Water Resource Research, Vol. 1, No. 3, 1965.

2. Loucks, D. P., "A Comment on Optimization Methods for Branching Multistage Water Resource Systems." Water Resource Research, Vol. 4, No. 2, April, 1968.

3. Dracup, J. A., "The Optimum Use of A Groundwater and Surfacewater System: A Parametric Linear Programming Approach." University of California Water Resources Center Contribution, No. 107, July, 1966.

4. Parikh, S. C., "Linear Dynamic Decomposition Programming of Optimal Long Range Operation of a Multiple Multi-purpose Reservoir System." University of California, Berkeley, Sept., 1966.

5. Harboe, R. C., "Optimization Models for the Analysis of Water Resources System." U. C. L. A. Ph.D. Thesis, 1970.

6. Reynolds, J. E., and Connor, J. R., "An Allocation Model to Determine Agriculture's Ability to Compete for Water, " Florida Agriculture Expt. Station Journal, 1971.

7. Guise, J. W. B., and Flinn, J. C., "The Allocation and Pricing of Water in a River Basin." American Journal of Agri. Economics, Vol. 52, No. 3, August, 1970.

8. Flinn, J. C., and Guise, J. W. B., "An Application of Spatial Equilibrium Analysis to Water Resource Allocation." Water Resources Research, Vol. 6, No. 2, April, 1970.

9. Reid, G. W., "A Multistructural Demand Model for Water Requirement Forecasting (Final Report)." Final Report to Office of Water Resources Research, January, 1970.

10. Delucia, R. J., and Rogers, P., "North Altantic Regional Supply Model." Water Resources Research, Vol. 8, No. 3, June, 1972.

11. Beard, L. R., Weiss, A. O., and Austin, T. A., "Alternative Approaches to Water Resource System Simulation." Proc. Interational Symposium on Modelling Techniques in Water Resources Systems, Vol. 2, May 1972.

12. Dracup, J. A., Grant, S. G., Cardenas, M. A., and Fogarty, T. J., "A Generalized Probabilistic Approach to Regional Water Supply Assessment." Environmental Dynamics, Inc., L. A. Calif., Dec., 1970.

13. Dracup, J. A., "The State of the Art in Optimal Conjuctive Use of Ground and Surface Water Systems." U. C. L. A. Department of Engineering Systems, 1971.

14. Reid, G. W. and Alguire, R. T., "Systems Approach to Metropolitan and Regional Area Water and Sewer Planning." Final Report to Office of Water Resources Research, May, 1973.

15. Bair, Fredrick H., Jr., "Planning Cities: Selected Writings on Principles and Practices," American Society of Planning Officials, Chicago, Illinois, 1970.

16. "The Real Future of Downtown," Downtown Idea Exchange, Vol. 19, No. 22, November 15, 1972.

17. "Jobs, People and Land," Center for Real Estate and Urban Economics, University of California, Berkeley, California, 1968.

18. Reid, George W., Unit Water Consumption Projections-Oklahoma Manufacturing and Mining Industries, United States Department of Interior, Bureau of Reclamation, October, 1964, page 15.

19. Reid, George W., Report on Water Resource Mathematical Modeling, Economic System Corporation - AVCO, October, 1968, page 63.

20. Bartone, Carl R., A State Planning Model for Water Resources Development, Ph.D. Dissertation, University of Oklahoma, Norman, Oklahoma, 1970.

21. Ford, L. R. , Jr., and D. R. Fulkerson, "Flows in Networks", Princeton University Press, Princeton, N. J. , 1962.

22. Fulkerson, D. R., "Increasing the Capacity of a Network, the Parametric Budget Problem:, Man. Sci. 5(4), July, 1959.

23. Reeder, Hugh A., "An Out-of-Kilter Algorithm for Minimal-Cost Flow Problems with Convex Cost Functions", paper presented at the SIAM/SIGNUM Fall Meeting, Austin, Texas, 1972.

24. "Third Quarterly Cost Report", Engineering News Record, Vol. 183, No. 12, Sept. 18, 1969, pp. 106-172.

25. Comparative Cost Factors for Water Supply Systems, Tulsa Metropolitan Planning Commission, WSS - VII, Tulsa, 1968.

26. Standardized Procedure for Estimating the Costs of Conventional Water Supplies, Black and Veatch, Kansas City, 1963.

27. Dawes, J. H., Tools for Water Resource Study, ASCE, Preprint 1074, Chicago, October, 1969.

28. Fulkerson, D. R., "An Out-of-Kilter Method for Minimal-Cost Flow Problems", Journal SIAM, Vol. 9, No. 1, March 1961, pp. 18-27.

29. Clasen, R. J., "Out-of-Kilter Program", Write-up for IBM 7044, RS OKF3, SDA, No. 3536.

30. Reeder, H. A. and Jensen, Dr. P. A., "An Out-of-Kilter Algorithm for Minimal-Cost Flow Problems with Cost Functions", Paper presented at SIAM/SIGNUM Meeting, Fall, Austin, Texas, 1972.

31. Shah, Kanti L., "Techniques for Estimating Costs of Waste Treatment Plants," Ph.D. Dissertation, University of Oklahoma, Norman, Oklahoma, 1969.

32. Smith, Robert, "Cost of Conventional and Advanced Treatment of Wastewaters," U. S. Department of Interior, Cincinnati Water Research Laboratory, Cincinnati, Ohio, July, 1968.

33. Standardized Procedure for Estimating Costs of Conventional Water Supplies, Black and Veatch, Kansas City, 1963.

34. Study of Needs for Sewage Works, Greeley and Hansen, New York, 1962.

35. Reid, George W., "Interdisciplinary Modeling Techniques", Unpublished Working Papers, January 1971.