INFORMATION TO USERS

This was produced from a copy of a document sent to us for microfilming. While the most advanced technological means to photograph and reproduce this document have been used, the quality is heavily dependent upon the quality of the material submitted.

The following explanation of techniques is provided to help you understand markings or notations which may appear on this reproduction.

1. The sign or "target" for pages apparently lacking from the document photographed is "Missing Page(s)". If it was possible to obtain the missing page(s) or section, they are spliced into the film along with adjacent pages. This may have necessitated cutting through an image and duplicating adjacent pages to assure you of complete continuity.

2. When an image on the film is obliterated with a round black mark it is an indication that the film inspector noticed either blurred copy because of movement during exposure, or duplicate copy. Unless we meant to delete copyrighted materials that should not have been filmed, you will find a good image of the page in the adjacent frame.

3. When a map, drawing or chart, etc., is part of the material being photographed the photographer has followed a definite method in "sectioning" the material. It is customary to begin filming at the upper left hand corner of a large sheet and to continue from left to right in equal sections with small overlaps. If necessary, sectioning is continued again–beginning below the first row and continuing on until complete.

4. For any illustrations that cannot be reproduced satisfactorily by xerography, photographic prints can be purchased at additional cost and tipped into your xerographic copy. Requests can be made to our Dissertations Customer Services Department.

5. Some pages in any document may have indistinct print. In all cases we have filmed the best available copy.

University
Microfilms
International

300 N. ZEEB ROAD, ANN ARBOR, MI 48106
18 BEDFORD ROW, LONDON WC1R 4EJ, ENGLAND

Downloaded from SHAREOK. Persistent Handle URL: https://hdl.handle.net/11244/4532

7911155

KLOPATEK, JEFFREY MATTHEW
THE ENERGETICS OF LAND USE IN THREE OKLAHOMA COUNTIES.

THE UNIVERSITY OF OKLAHOMA, PH.D., 1978

University Microfilms International 300 N. ZEEB ROAD, ANN ARBOR, MI 48106

PLEASE NOTE:

In all cases this material has been filmed in the best possible way from the available copy. Problems encountered with this document have been identified here with a check mark ✓.

1. Glossy photographs ✓
2. Colored illustrations _____
3. Photographs with dark background _____
4. Illustrations are poor copy _____
5. Print shows through as there is text on both sides of page _____
6. Indistinct, broken or small print on several pages _____ throughout _____
7. Tightly bound copy with print lost in spine _____
8. Computer printout pages with indistinct print _____
9. Page(s) _____ lacking when material received, and not available from school or author _____
10. Page(s) _____ seem to be missing in numbering only as text follows _____
11. Poor carbon copy _____
12. Not original copy, several pages with blurred type _____
13. Appendix pages are poor copy _____
14. Original copy with light type _____
15. Curling and wrinkled pages _____
16. Other _____

University Microfilms International

300 N. ZEEB RD., ANN ARBOR, MI 48106 (313) 761-4700

THE UNIVERSITY OF OKLAHOMA

GRADUATE COLLEGE

THE ENERGETICS OF LAND USE IN THREE OKLAHOMA COUNTIES

A DISSERTATION

SUBMITTED TO THE GRADUATE FACULTY

in partial fulfillment of the requirements for the

degree of

DOCTOR OF PHILOSOPHY

BY

JEFFREY MATTHEW KLOPATEK

Norman, Oklahoma

1978

THE ENERGETICS OF LAND USE IN

THREE OKLAHOMA COUNTIES

APPROVED BY

Paul A. Boner

Edwin H. Keeler

Elroy L. Rice

James Esther

DISSERTATION COMMITTEE

ACKNOWLEDGMENTS

This dissertation, because it relied so heavily on published and unpublished data from a wealth of sources, is in actuality a product of the many people in the State of Oklahoma who assisted me. To all those people, thanks. Special thanks is also given to Drs. Paul G. Risser and Martha W. Gilliland for their assistance and patience shown during the course of this study. Appreciation is also offered to Drs. Elroy L. Rice, James Estes, and Edwin Klehr for critically reviewing the manuscript.

Appreciation is given to Linda Judd for her assistance in the early stages of the manuscript preparation. Sincere thanks are given to Shirley Lawson, Oak Ridge National Laboratory, who spent many frustrating hours deciphering my penmanship and turning it into the finished manuscript.

And finally, a measure of love is offered to my wife Barbara who stood by me during these years, even during the time when disaster seemed eminent, and who continually expressed her encouragement and understanding. Lest I forget, I am indebted to my son, Joshua Matthew, who has reminded me again and again what a pleasure it is to be young and what life is all about.

TABLE OF CONTENTS

Page

ACKNOWLEDGMENTS iii

LIST OF TABLES viii

LIST OF FIGURES xii

ABSTRACT xv

Chapter

I. INTRODUCTION 1

Purpose 4

Ecological Analysis and Land-Use Planning 5

Energy Flow Analysis and Land-Use Planning 8

Background 8

Conceptual Basis of Energy-Flow Analysis 11

II. STUDY AREA 16

Oklahoma 16

Comparative Overview of the Three Counties 18

Texas County 24

Physical Features 25

Climate 26

Hydrology 26

Vegetation 27

Socio-economic Characteristics 27

TABLE OF CONTENTS (Continued)

Page

Cleveland County 29

Physical Features 29

Soils 29

Climate 30

Hydrology 30

Vegetation 31

Socio-economic Characteristics 31

McCurtain County 32

Physical Features 33

Soils 33

Climate 34

Hydrology 34

Vegetation 35

Socio-economic Characteristics 36

III. METHODS 38

Primary Productivity Profile 38

System Components and Causal Forces 53

Construction of Models 54

Data Acquisition 60

Data Analysis 61

Energy Analysis 61

Energy Quality 64

Computer Simulations 68

TABLE OF CONTENTS (Continued)

Page

IV. RESULTS 75

Primary Productivity Profile 75

Total Agricultural Production 75

Total Primary Production 98

Statewide Pattern 102

Natural Energy Contributions 108

Solar Radiation 108

Precipitation 109

Agricultural Systems Energetics 113

Agroecosystem Models 113

Agricultural Energy Subsidies 119

Agroecosystem Output 128

Crop Production 128

Total Output 136

Comparative Efficiencies 138

Grazing Systems Energetics 143

Grazing Ecosystem Models 144

Grazing System Subsidies 144

Grazing Systems Output 154

Primary Production 154

Secondary Production 155

Comparative Efficiencies 160

Forest Systems 162

Forest System Models 164

TABLE OF CONTENTS (Continued)

Page

Forest System Subsidies 170

Forest System Output 170

Total Production 170

Harvestable Output 174

Comparative Efficiencies 179

Forest Industry 180

Right-of-Ways 180

Right-of-Way Models 181

Highway Right-of-Ways 183

Transmission Line Right-of-Ways 189

Land Use 192

Agricultural Land 197

Cleveland County 199

V. CONCLUSIONS 207

Primary Productivity Profile 207

Agricultural Systems 208

Grazing Systems 210

Forest Systems 211

Land Use 212

LITERATURE CITED 215

APPENDIX A 241

APPENDIX B 245

LIST OF TABLES

TABLE		Page
1.	The mean and standard deviation on estimated yields of alfalfa, oats, sorghum, and wheat on all soil types in Oklahoma	42
2.	Relative potential productivity of major soil associations in Oklahoma	44
3.	Relative potential soil productivity of Oklahoma counties	49
4.	A list of some of the common energy quality conversion factors used in this study	70
5.	Primary production of major land-use categories in Oklahoma	76
6.	Linear correlation coefficients between total state primary productivity and agricultural productivity and various environmental and subsidization factors	95
7.	The value of water in Oklahoma based on primary production	112
8.	Example of process to convert agricultural inputs to kcal of fuel equivalents	120

LIST OF TABLES (Continued)

TABLE		Page
9.	List of the subsidized inputs required to maintain the principal agricultural crops in Texas, Cleveland and McCurtain Counties	122
10.	Average yields, conversion figures, net primary production and gross primary production of the major crops in Texas, Cleveland and McCurtain Counties	129
11.	Area and total net and gross primary production of the principal crops grown in Texas, Cleveland and McCurtain Counties	133
12.	Comparison of the energy inputs and outputs of three county agricultural ecosystems	139
13.	Energy requirements for maintaining rangeland and pasture in Texas, Cleveland and McCurtain Counties	148
14.	Energy subsidization required for the maintenance of cattle on rangeland and pasture in three Oklahoma counties	151
15.	Annual net and gross primary production of range and pasture systems in Texas, Cleveland and McCurtain Counties	156
16.	Numbers of livestock within each of the three study counties	158

LIST OF TABLES (Continued)

TABLE Page

17. Average available energy grazed by cattle under moderate stocking on rangeland and pastures and average weight gain per hectare in Texas, Cleveland and McCurtain Counties 159

18. Comparison of beef output to energy subsidization input in Texas, Cleveland and McCurtain Counties 161

19. 1974 dollar and energy costs for maintaining pine plantations in the Piedmont area of the South 171

20. Energy expenditures for logging operations 173

21. Estimated annual net and gross primary productivity for forest types in McCurtain County 175

22. Growing-stock and sawtimber volume, net growth of growing-stock and sawtimber, and growing-stock and sawtimber removals in 1975 on commercial forests of McCurtain County, Oklahoma 177

23. Conversion methods for converting cubic feet of harvested timber into the standing crop of biomass 178

24. Highway right-of-way land use, energy flow and energy maintenance requirements in Texas, Cleveland and McCurtain Counties in Oklahoma 184

25. Annual amounts of liquid fuel consumed in Oklahoma 1955 to 1975 186

LIST OF TABLES (Continued)

TABLE		Page
26.	Expenditures of gasoline and diesel fuel for 1974 in Texas, Cleveland and McCurtain Counties based on state expenditures	188
27.	Electrical power generation and consumption statistics for Texas, Cleveland and McCurtain Counties, Oklahoma - 1974 .	190
28.	Amount and capacity of electric transmission lines in Texas, Cleveland and McCurtain Counties, Oklahoma	191
29.	Land use in Texas, Cleveland and McCurtain Counties, Oklahoma, in 1974	196
30.	Numerical results of Cleveland County land-use model . . .	202

LIST OF FIGURES

FIGURE		Page
1.	Potential vegetation map of Oklahoma	17
2.	Thirty year annual average precipitation	19
3.	The thirty year annual average temperature	20
4.	Location of Cleveland, McCurtain and Texas Counties in Oklahoma	21
5.	Climogram of monthly precipitation and potential evapotranspiration in Texas, Cleveland and McCurtain Counties	23
6.	Relative potential soil productivity map of Oklahoma . . .	51
7.	Description of the principal energy language symbols employed in this dissertation	55
8.	Generalized energy flow model of agriculture in Texas County, Oklahoma	57
9.	Macroscale, mini-model of agricultural energy flow in Texas County, Oklahoma	59
10.	Hierarchy of energy quality transformations	67
11.	Total agricultural production per county area	92
12.	Correlation between 1971 agricultural net primary production per county and relative potential soil productivity .	94

LIST OF FIGURES (Continued)

FIGURE Page

13. Percentage of total county primary production derived from agriculture 99
14. Total Oklahoma production per county area 100
15. Simplified diagram showing interaction between sun and rain and the controlling action precipitation plays . . . 110
16. Energy model of agriculture in Texas County, Oklahoma . . 115
17. Energy model of agriculture in Cleveland County, Oklahoma 116
18. Energy model of agriculture in McCurtain County, Oklahoma 117
19. Three-dimensional SYMVU portrayal of 1971 agricultural irrigation per county in Oklahoma 126
20. Energy model of range and pasture systems in Texas County, Oklahoma 145
21. Energy model of range and pasture systems in Cleveland County, Oklahoma 146
22. Energy model of range and pasture systems in McCurtain County, Oklahoma 147
23. Comparison of beef production to efficiency in pasture and range systems in Texas, Cleveland and McCurtain Counties, Oklahoma 163
24. Energy flow model of McCurtain County forest land use . . 165
25. Energy flow model of the timber industry in McCurtain County 169

LIST OF FIGURES (Continued)

FIGURE Page

26. Qualitative energy flow models of highway and transmission line right-of-ways 182
27. Land-use map of Texas County, Oklahoma 193
28. Land-use map of Cleveland County, Oklahoma 194
29. Land-use map of McCurtain County, Oklahoma 195
30. Trend of cropland, 1910-1975, in Texas, Cleveland and McCurtain Counties 198
31. Land-use model of Cleveland County, Oklahoma 201
32. Cleveland County land-use projection 203
33. Cropland and urban land projections for Cleveland County, Oklahoma 205
34. Population projection for Cleveland County, Oklahoma . . . 206

ABSTRACT

This dissertation analyzes and discusses the primary production and land resources in the State of Oklahoma, and then investigates the energy requirements of various land-use systems in three distinctly different counties.

The annual net primary production (NPP) of all land-use types was totalled for each county. These data were then coupled with computer mapping techniques to portray primary production patterns or "profiles" across the state. Oklahoma exhibits a strong declining east to west gradient. This pattern contrasts sharply with that for agricultural NPP, where highest agricultural production is in the central, north-central, and panhandle portions of the state.

With the exception of the large section of moderate productivity rates characteristic of the north-northeast section of the state, the primary production shows a clear decreasing gradient from east to west. This apparent exception represents natural productivity of the area as much of the land is in pasture, ungrazed rangeland, or wild hay. Most of the vegetation is naturally occurring and for the most part unsubsidized. In the region immediately west, however, agricultural enterprises comprise the majority of the land use and the total primary production reflects the results of fossil fuel-based subsidization.

Lowest total primary production occurs in the hot, dry southwestern and cold, dry northwestern and panhandle sections of the state. In these regions agricultural production comprises one-fourth to almost two-thirds of the counties' total primary production.

The Oklahoma primary productivity profile most closely corresponds to a single major environmental variable – precipitation. Oklahoma can be thought of both as a state with a vegetational transition from deciduous forest in the east to short-grass prairie in the west, and an accompanying decreasing gradient of primary production. The counties characterized by high productivities in the southeast and east (10.2 mt/ha/yr) are three times that of the low values in the northwest and southwest (3.2-3.4 mt/ha/yr). Examination of annual net primary production rates obscures many of the external costs involved in maintaining the managed primary production levels. In a number of instances there were low positive or negative correlations between productivity and apparently favorable environmental factors. Various subsidizations are the primary reason that negative correlations were obtained for agricultural primary production even though positive correlations were obtained for total primary production. Specifically, this is indicative of man's overcoming the natural limitations of his environment with fossil fuel-based or supported subsidies in the form of fertilization, irrigation, disease and insect protection, and cultivation. The extent and amount of these fuel-based subsidies were examined for agricultural, pasture, range, forest, and right-of-way systems in Texas, Cleveland and McCurtain Counties.

Through application of energy flow analysis methodology, the cost and benefits associated with different land uses can be quantified with the common denominator of kcal fuel equivalents. This approach has been utilized to quantify the energetics of maintaining various land-use types in different physiographic regions. Macroscale energy models were constructed and the inputs and outputs of these land-use systems (agriculture, grazing land and intensive forestry) quantified in terms of fuel equivalents. The results show that the energy costs of maintaining some of these systems in certain areas may be economically beneficial in the short run, but energetically prohibitive in the long run. This results from large energy subsidies which are required to overcome the natural limiting factors. Energy efficiency of natural systems is significantly greater than that of the managed systems, although the harvestable productivity is lower. A comparison of the output from the agricultural systems to the fuel-based inputs (all in terms of kcal fuel equivalents) resulted in ratios of 0.238, 0.344 and 0.289 for Texas, Cleveland and McCurtain Counties, respectively. The beef output from the range systems, when compared to the energy required to maintain the range and the beef displayed a ratio of approximately 0.13 for all three counties. However, pasture systems varied from 0.01 to 0.08 for the counties.

Output from mixed forests and pine plantations in McCurtain County was also compared to fuel-based input. The output/input ratios were 1.29 and 0.99 for the two types of forest, respectively.

Land-use models of Cleveland County were constructed and simulated to show predicted land transfers within the county. Output from

the model showed serious reductions in agricultural and grazing land with significant increases in urban land.

THE ENERGETICS OF LAND USE IN THREE OKLAHOMA COUNTIES

CHAPTER I

INTRODUCTION

The landscape around us is comprised of a patchwork of ecosystems, both of natural and man-made origin, and requiring different levels of management and subsidization. Man has been involved in the management of some of these ecosystems for at least 8000 years (TIE 1972). However, even before man's intervention, the naturally-occurring ecosystems had evolved a structure and function to insure their overall homeostasis and self-continuation. In the last decade, the importance of understanding the complexity of ecosystems, how ecosystems respond to both natural and artificial perturbations, and to what extent the productivity of these systems was modified, has been emphasized by the wide-scale ecosystem analysis effort sponsored by the International Biological Program. It was the further objective of the IBP that through the utilization of basic ecosystem properties, such as primary production, man would be able to set limits on himself and establish long-term plans for maximizing the use and conservation of his land resources.

When man's intervention was minimal or localized, the degradative environmental effects of his land use were corrected by the free work done by nature or, as stated by Woodwell (1974a), "the public service functions of nature". This work included the recleansing of water supplies, dissipation of environmental pollutants, and the regeneration of soil in slash and burn or shifting agriculture. But in recent times man's degree of land use has spread and increased in intensity. As a result, less desirable and marginal lands are being settled and utilized, resulting in a higher cost of subsidization in the form of fossil fuel-based energy, and often accompanied by severe modifications of the natural ecosystems (Pimentel, et al. 1975, 1976). The need for a priori evaluations of future land-use planning commitments is apparent as man's intervention into ecosystem processes increases, as well as his dependency on intensely managed and subsidized systems (e.g. cities and industrialized agriculture). The benefits obtained from the managed ecosystems are a function of the interactions between the manipulated or exploited populations and their physical and biological environments.

Much of the land-use planning in effect today has been done in a piecemeal fashion and, as discussed by Cooper and Vlasen (1974), is subject to oscillating economic, political, and social pressures. Consequently, preemptive demands on the environment have often resulted in the stressing of ecosystems beyond their assimilative capacity (Garvey 1972). As a consequence of this environmental depreciation, in conjunction with the increased environmental awareness over the last decade and with strong assistance from the National Environmental

Policy Act, a new environmental awareness has entered into the planning scene (McAllister 1974). Furthermore, there has been an increased awareness of the need for comprehensive and long-range land-use planning and the analyses of the cost and benefits of specific land uses.

Interest in land use and land controls has been stimulated at the local, state, and Federal levels (Listokin 1974, Healy 1976). There has also been an ever-increasing effort to initiate land-use planning at the Federal level or at least to insure that individual states inact a comprehensive land-use plan (Reilly 1974). In fact, the Federal government currently has a number of tools at its disposal for instituting comprehensive planning including the National Environmental Policy Act and the requirement by the U.S. Environmental Protection Agency for basin-wide 208 studies for water resource development. Surfacing from the increased concerns on land use is the realization that sound planning must consider not only the individual planning unit but also the unit's interrelationship with the systems that surround it.

A major problem in the planning process is that of the construction and implementation of an objective value system which eliminates individual biases. For no matter how comprehensive or how long-term the land-use plan, it is difficult if not impossible at times to satisfy the diverse prerequisites maintained by the ecologist and the economist, the developer and the farmer or the public official and the private citizen. In other words, the worth of a tract of land can be expected to be valued as diversely as are the group of individuals evaluating it.

Therefore, in the assessment of the basic value of land for land-use policy and decisions, it would be desirable to evaluate the land in terms of its natural worth rather than in terms of its dollar value which may change continually. To do this a value system must be employed which is both objective and uses a common unit applicable to all land-use types. In this dissertation the energy unit is employed to value all land-use categories. Its use rests on a value theory of energy.

Purpose

This dissertation is an attempt to analyze land use on a macroscale, utilizing the methodology of energy-flow analysis. Energy systems models are employed as tools in the analysis of the energetics of three distinctly different counties in the state of Oklahoma. The primary goals of this study were fourfold: 1) To compile annual net primary production data for all major land-use types (natural plant communities, agricultural crops, cities, right-of-ways, reservoirs, etc.); to portray the primary patterns or "profiles" across the state; and to correlate these patterns with existing environmental parameters. 2) To determine the natural and subsidized (by man) energies required to maintain the principal land-use types found within each of the three sample counties. 3) To perform an energy cost-benefit analysis of the individual land-use types and develop an energy input-output model for each county. 4) To combine knowledge of existing land-use trends with the results of the energy cost-benefit analysis in order to evolve recommendations for sound land management. The completion

of the primary goals of the dissertation provides a data base with which most land-use types in Oklahoma can be evaluated. It also presents an insight into certain properties of ecosystems in different parts of Oklahoma which make some more costly or more beneficial to maintain.

Ecological Analysis and Land-Use Planning

Hills (1961) was one of the first individuals to develop an ecological approach to land use and land-use classification. Hills listed a number of ecological components (i.e. vegetation and physiography) which combined to form an ecological unit which he felt were essential to land-use planning. In later years Hills' techniques were significantly expanded and have found widespread application in Canada as a biophysical basis for land-use planning (Jurdant, et al. 1974). A number of additional methodologies originated in the last decade (e.g. McHarg 1969), and have been summarized by Steinitz, et al. (1969). Basically, these techniques involved the evaluation of a number of attributes of the area with an ecological viewpoint (i.e. vegetation associations, soil capability, wildlife habitat, geology, archaeologic interests, etc.) and combining the factors to obtain a suitability profile or regional overlay for a comprehensive land-use plan. The method of combination was normally through the utilization of a matrix by which the effects of various land-use types on a variety of components could be evaluated. An excellent example of the matrix approach is given by Sorensen (1971) with his cause-condition-effect matrix technique. In this method no attempt is made to formulate a

regional plan, but rather to resolve resource-use conflicts and prevent resource degradation. Attempts have also been made to provide ecological input into the evaluation of regional land use based on primary productivity (Stearns, et al. 1971; Cottam, et al. 1973; Art and Marks 1973; Reader 1973; Sharpe and Lieth 1974; and Sharpe 1975). The role that primary production plays in ecological, environmental, and planning considerations is described in Lieth (1973), Box (1975), and Klopatek and Risser (1977).

Thus as indicated above, and as discussed in McAllister (1974), since the development of an ecological approach to land-use planning by Hills (1961), there has been a continual upsurge of incorporating environmental factors into land-use planning. The reasons for this development are as diverse as are the land-use problems facing society today (U.S. EPA 1974), but in the United States it can be attributed to three major factors: 1) an increase in environmental awareness that has spawned public support and interaction; 2) the institution of the National Environmental Policy Act (NEPA) which has forced environmental and ecological considerations over a broad spectrum of projects; and 3) the rise of systems analysis in ecology whereby decisions and impacts can be evaluated in terms of their functional interrelationships within the ecosystem. The first two factors should be familiar to all. The third topic – that of systems ecology and land-use planning – as discussed by Shugart, Klopatek and Emanuel (1978) is only of recent lineage and appears to be an area of considerable promise.

As systems ecology and ecosystems analysis have developed over the past few years there has been a concomitant increased interest

in practical applications. In an applied sense, we can say that systems ecology in relationship to land-use planning has not reached maturity. However, systems ecology has as its strength that in order to deal with one element of a system (e.g. land-use type), its functional linear and non-linear interrelationship with the rest of the system (e.g. the surrounding region) must be considered. Planning questions often require an extrapolation and refinement from traditional ecological dogma. By viewing an entire system, insight is gained into the importance of individual parts, thus decreasing the likelihood of excessive time spent on individual components which perhaps play only a minor role in the system. Finally, systems ecology forms the basis for mathematical simulation models which can be validated and exercised to obtain predictions of future events. These models, through the universality of mathematics, can travel across disciplinary boundaries more readily than other types of information.

Watt (1968) and Van Dyne (1969) have both published books dealing with systems analysis and natural resource management and include discussions on systems models and planning. Ecosystem approaches on an applied level are still in the weaning state, but are being employed on an increasing basis (Cooper and Vlasen 1974). The use of ecological systems models for planning schemes are found in Hett (1971), Odum (1972a), Antonini, et al. (1974), and Shugart, et al. (1977). Isard (1972) has combined an economic and ecosystems analysis approach for regional development while McCarthy, et al. (1974) have instituted a comprehensive model for a 1800 km^2 area in

east Tennessee. The consideration of the environmental impact of different land-use types is vital to sound planning. Examples of systems models for impact analysis as related to land use can be seen in articles by Odum (1972a), Hall (1975), and Gilliland and Risser (1977). Perhaps the most intensive and extensive effort to utilize a system approach to land-use planning is the South Florida study (Odum and Brown 1975; Browder, et al. 1976) which will be discussed in more detail in following sections.

Energy Flow Analysis and Land-Use Planning

Background. As mentioned previously, one of the problems confronted in comprehensive regional, impact or cost-benefit analyses is that of instituting an objective value system. In ecological investigations the evaluations have employed energy values (most often the calorie) as the common denominator. Since the work by Lindemann (1942) on the trophic-dynamic aspects of ecology, ecologists have focused a considerable amount of attention on the flow of energy in ecological communities (Paine 1971). This degree of importance is well-deserved, for energy is the primary, most universal measure of all kinds of work by human beings and nature (Odum and Odum 1976). To know the sources of energy and the pattern of its flow in a community or ecosystem is to know in a large part how that community or ecosystem functions. The amount of structure a community can build and support, the information it can attain, the interactions that develop between its components, and the overall stability of the system are all dictated to a great degree by the amount and periodicity of the

flow of available energy. Whittaker (1975) states that the most fundamental dimension of an ecosystem is its productivity, or the rate of creation of organic material (chemical energy) by photosynthesis (from light energy) primarily, per unit of area and time.

The energetics of a variety of ecological communities have been examined including freshwater (Bray 1962) and saltwater marshes (Teal 1962), successional old fields (Golley 1960), forests (Woodwell 1970, Jordan 1971), and the well-known Silver Springs ecosystem in Florida (Odum 1957). The use of energetics has resulted in a knowledge of both the structure and function of the ecosystems and also a greater understanding of the strategies involved within the systems for their continued existence. The transition from the study of natural intact communities to the analyses of the energy flow in ecosystems on a macroscale with the inclusion of man as an integral part of the community has been a difficult step to make (Barret, et al. 1976). The U.S. IBP also realized the importance of incorporating man as an integral part of the ecosystem and concluded that a prime method of integrating the study of human communities with the study of ecosystems was through the implementation of energy flow studies (Jamison and Friedman 1974).

Basic principles of energy flow and particularly the laws of thermodynamics have been utilized in the physical and to a lesser degree the biological sciences (Gallucci 1974). With the occurrence of the recent energy shortage, or actually the curtailment of supplies, the linkages that have always existed between energy, ecology, the economy and society (Odum 1973) were made more evident. In essence,

many individuals, previously just concerned with singular parts of the system, were able to see the interconnectiveness between the parts and the whole system. This does not mean that the interconnectiveness was not visible to individuals before; on the contrary, there have been many discussions of basic economic-energetic linkages (Georgescu-Roegen 1971, 1977; Garvey 1972; Shatz 1974; and Odum 1974a). In fact, the suggestion has even been made by some to use the calorie as the basic unit of value and not the dollar (Hannon 1973, Odum 1975b).

Although the total national system was affected by the curtailment of energy supplies, certain components were more affected than others. This was especially true of the highly energy-subsidized systems such as cities and industrialized agriculture. As energy supplies decreased, competition between the city and the agricultural system (i.e. energy for home heating versus energy for the manufacture of fertilizer) increased. The competition was (and is) further aggravated by the existence of land-use competition [295,000 hectares of agricultural land consumed by urban sprawl each year (EPA 1974)]. More energy is consumed by the urban system as it grows in size, but urban growth means that more energy is needed by the agricultural sector in order to supplement the natural energies available to it as prime agricultural land diminishes and agricultural commodities are in greater demand (Pimentel, et al. 1976). It is understandable why the energy-land use-food production cycle has received considerable attention (Borghstrom 1973; Pimentel, et al. 1973, 1975; Hirst 1974; and Heichel 1976). However, although the use of energetics as a tool for evaluating productivity, efficiency and functional relationships is expanding, it

still is being accomplished in a disjunct fashion. A unifying concept of energetics with ecosystems theory is needed to enhance its utility as a viable technique. Agroecosystems (Harper 1975) and urban ecosystems (Holling and Orians 1971) have been characterized as having properties similar to natural ecosystems. If all ecosystems possess similar inherent properties, as has been suggested (Margaleff 1968, Odum 1969), then the quantification of their energetics (and material cycling) can result in the formation of an analytical tool to evaluate not only the individual systems but the connection and dependency between systems. Odum and Peterson (1972), Bayley and Odum (1973), Odum and Brown (1975), and Zuccheto (1975) have shown how the coupling of energetics in an ecosystem framework can be used for regional analysis and planning. The compilation of the entire energy budget of the state of Oregon (State of Oregon 1974) is indicative of the applicability of this concept. In fact, Lavine and Meyburg (1976) have shown that the energy-flow analysis methodology appears to be better suited for environmental planning purposes than 17 other methodologies with which it was compared.

Conceptual Basis of Energy-Flow Analysis

The basis for the application of energetics to planning analysis is that energy is assumed to be the one necessary resource for all activities of managed (by man) and natural systems. Furthermore, energy-flow analysis can be conducted in an accurate and consistent manner because of the existence of the first two laws of thermodynamics and the extension of the maximum power principle derived by Lotka (1924).

The first law of thermodynamics, the law of energy conservation, states that energy may be transformed from one type to another (i.e. light-chemical-heat), but never created or destroyed. Thus, the energy that flows into a system (J) must be accounted for by either the change in energy storage within the system (Q) or the energy flowing out of the system (W). In simplified equation form, this is $J = dQ + W$.

The second law of thermodynamics, the energy degradation law, may be stated in various ways: No spontaneous transfer of energy is 100% efficient due to some energy always being dispersed as unavailable heat energy (i.e. no process of energy transformation occurs without a degradation from a concentrated form to a dispersed form; the energy is thus degraded in quality and loses its ability to do work). Thus, it can be said that all systems, when left alone or isolated, proceed toward a higher state of entropy(s) or greater disorder due to the transfer of energy to a less available and more dispersed state. Since an energy flow occurs in all real world systems, there is an existence of a movement toward disorder or greater entropy. It may be misconstrued that on an evolutionary scale, the tendency of biological systems toward increasing structural complexity with a parallel increase in order is contradictory. However, the structural complexity increases the energy efficiency of the system such that entropy production is not eliminated or significantly reduced, but rather the change in entropy on a lifetime scale approximates a steady-state relation of $dS = 0$ (Gallucci 1974). Therefore, a system in steady state depends on maintaining energy inflow equal to that lost as dispersed heat.

Carrying this further implies that no matter what the system, its efficiency (i.e. the amount of potential energy harnessed as useful work) will never be 100%. Examples of this are commonplace ranging from food intake by animals to the conversion of the potential energy in coal to heat energy in an electric oven. The third principle which acts as a basis for energy-flow analysis is referred to as the maximum power principle. It has also been termed Lotka's Maximum Power Principle (after Lotka 1924, Odum 1975b) or the optimum utilization principle (Wesley 1974). This theory states that systems (natural and/or man-made) that survive are those which maximize their energy inflow for useful work in the competition with other systems. In other words, the systems that survive are those that develop more power inflow and use it best to meet the needs of survival (Odum and Odum 1976). Thus, this theory embraces the concept that energy is the most flexible and general resource and hence the most critical that can be used in competitive processes.

It is perhaps impossible to prove the maximum power principle, or for that matter the first or second laws. However, the evidence surrounds us. Climax ecosystems (i.e. forests) are good examples where successional systems have replaced one another over time until the terminal and most stable system predominates. The mature forest ecosystems, for example, have evolved mechanisms for recycling essential minerals, have evolved a diversity of species to resist perturbations, physiological mechanisms to cope with moisture regimes, and structural adaptations to maximize energy capture (Whittaker and Woodwell 1972). Systems managed by man such as cities also develop

means by which to maximize the energy utilization while striving to insure the continuous energy inflow into the system. This is done by maintaining a diversity of occupational niches, a broad tax base, industrial development and a division of labor.

If the systems that survive are those which maximize the incoming energy flow for useful work, and if useful work can be measured, it can be the criterion for determining what combination of man-dominated and natural systems a region can support. The useful work, of course, stems from the available potential energy in a region coming from fossil fuel-based energies and materials and natural energies of sun, wind, precipitation, etc. In combining the energies, a balance needs to be maintained between the free work done by the environment and that based upon fossil fuels. Odum and Odum (1972) have shown that for south Florida, a combination of 50% developed land (urban, agriculture, etc.) and 50% natural land yielded the maximum value of the environment (in terms of useful work). E. P. Odum and his students (1970) showed that in order to maximize the natural energies in the state of Georgia (while maintairing the current standard of living) it would require 10 percent of the land in urban-industrial systems, 30 percent in food and 20 percent in fiber-producing lands and 40 percent remaining as natural environment. It is not meant to imply in the above that each state or region's goal should be a self-contained system based on the energy and materials within its borders. Rather it is meant that for planning purposes, the region must be evaluated in terms of available natural energy. Fossil fuel-based energies, coupled with natural energies can then be utilized to not only maintain

a level of development within the system but also toward the production of materials, foodstuffs and services which can be exchanged for other energies and materials (with money as a mediator) necessary for the functioning of the system.

In regional analysis, all long-range planning should include a strategy for the climax or steady-state future. Given a region, the occurring natural energies, and a reasonable guaranteed level of fossil fuel-based energies, a level of development can be determined for the region which will best maximize the available energies and properties of the environment. Of course, this does not mean that the amount of specific types of developments will be determined. These decisions will still be left up to the local planners. What it does mean is that for a given region, a level of development can be approximated beyond which further development can lead to severe oscillations or a decline in the level of structure the system can support because of the inability to guarantee stable energy inflows.

CHAPTER II

STUDY AREA

Oklahoma

Oklahoma is considered part of the Great Plains (although the state does have four mountain ranges). The eastern edge of Oklahoma lies within the Deciduous Forest Biome while the western half of the state including the Panhandle lies within the Grassland Biome. The central portion of the state contains many of the floristic elements associated with the transition zone from deciduous forest to short-grass prairies (Kuchler 1964). Within the different physiographic provinces in Oklahoma, a diversified collection of over 300 species of woody plants occur, ranging from bald cypress to sagebrush, beech to mesquite and loblolly to ponderosa pine. Approximately twenty-three percent of the state's land area is covered by forest. Figure 1 depicts the potential natural vegetation in Oklahoma. Future discussion in this report will show that in many areas of the state, the natural vegetation occupies a small percentage of the land. Previous papers dealing with Oklahoma's vegetation include those by Bruner (1931), Duck and Fletcher (1945), Hefley (1937), Rice and Penfound (1959), Harlan (1960), Buck (1964), Milby and Penfound (1965), Risser and Rice (1970a,b), and Johnson and Risser (1975).

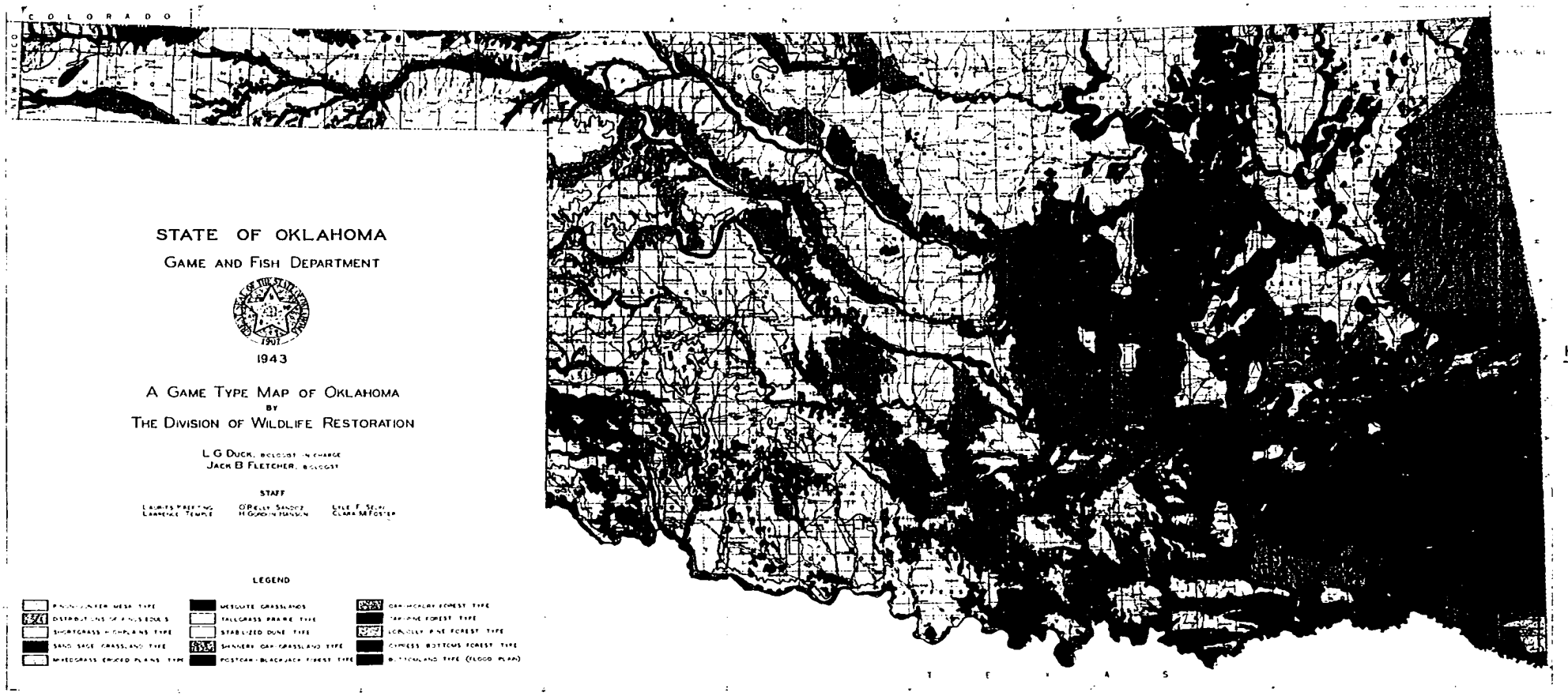

Figure 1. Potential vegetation map of Oklahoma.

OKLAHOMA VEGETATION

The original map of Duck and Fletcher (1943) has been reprinted by the Oklahoma Biological Survey with the permission of the Department of Wildlife Conservation.

The state slopes southeastward from an elevation of 1518 m at Black Mesa in the Panhandle to 99 m on the Red River in the southeastern corner. Topography is generally flat to rolling, exceptions being the Wichita Mountains in the southwest, the Arbuckle Mountains in the south central section, and the Ouachita, Boston, and Ozark Mountains along the eastern border. Mean annual temperatures vary from 15°C at Woodward in the Northwest to 18°C at Idabel in the Southeast. The average frost-free period is about 200 days at Woodward and about 240 days in the Southeast. Average annual precipitation varies from 38 cm in the Panhandle and 65 cm in the Northwest to 115 cm in the Southeast, with well over 130 cm locally in the mountains along the eastern border. The western section has greater extremes of temperature and more variable precipitation than the central and eastern sections. Wind velocities and evaporation rates are much higher in western sections than in eastern sections.

The Pinon-Juniper represents an eastern extension of the Rocky Mountain flora and is found only in the Black Mesa region of the Panhandle. The short-grass plains occur in areas of relatively low rainfall and are composed of blue grama, buffalo grass and other xeric species. Along the major rivers of the northern half of the state, there are numerous sandy areas and stabilized dunes which support sand sage, oaks and various shrubs. The western edge of the state is characterized by a sandy region which is covered with sand sage and islands of a taxonomically complex group of oaks, called oak shinnery. Most of the central part of the state is either covered with blackjack post oak forest or was once tall-grass prairie. Since the prairie soils are very rich and suitable for farming, virtually all the prairie has been converted either to grazing or crops. The oak forests cover areas of abandoned farmland or represent areas topographically unsuited for farming. The Ozark region is mostly deciduous forest dominated by a variety of oaks and hickories. The Southeast corner of the state is dominated by shortleaf pine or a number of deciduous tree species. Bottomland forests are characterized by such species as willow, cottonwood, elm, ash, hackberry, and sycamore.

In general, the grasses and trees become taller and larger from west to east and there are a greater number of species in the eastern part of the state. Although the state is dominated by tall grass and blackjack-post oak forest, there are representative vegetation types of the Rocky Mountains, high plains prairies, tall-grass prairies, Ozark hardwoods and coastal plain forests.

Oklahoma Biological Survey

Paul G. Risser, Director

The reason for the vegetational diversity is the climatic gradient across the state. Trewartha (1968) places the main body of Oklahoma in the subtropical humid type, the Panhandle in the steppe or semi-arid type, the northern border of the state as the southern boundary of the temperature continental type. Oklahoma exhibits a strong declining east-to-west gradient in annual precipitation (Fig. 2) and an increasing north-south gradient in annual average temperature (Fig. 3).

Comparative Overview of the Three Counties

To evaluate the energetics of land use in Oklahoma, three distinctly different counties were selected. Texas, Cleveland, and McCurtain counties were chosen based on differences observed in the Oklahoma Productivity Profile (Klopatek and Risser 1977). These three counties differ substantially not only in geographic locations but in physiographic provinces, climate, vegetation, economic bases, population characteristics and land-use commitments. Figure 4 depicts the location of each county in relation to each other and to the state of Oklahoma.

A detailed description of each county follows but a few general points need to be discussed first. One of the most important differences with respect to the three counties is their variation in climate. The climatic gradients have resulted in not only a distinct difference in the vegetational associations in the counties (Fig. 1), but have also resulted in the determination of specific land-use types due to moisture availability, soil formation, and primary production



SYMAP

Figure 2. Thirty year annual average precipitation (inches) (1941-1970).



SYMAP

Figure 3. The 30 year average annual temperature (°F) (1941-1970).

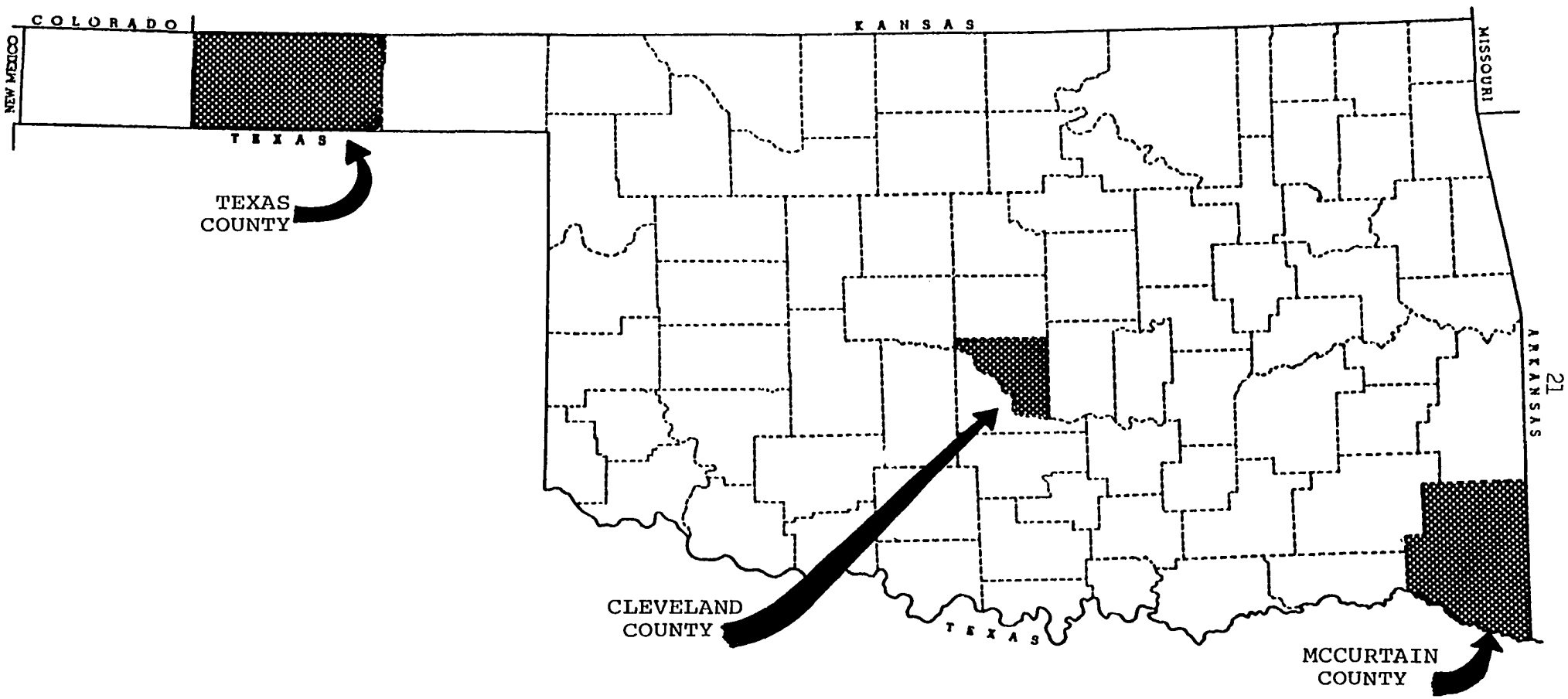

Figure 4. Location of Cleveland, McCurtain and Texas Counties in Oklahoma.

capabilities. The climogram shown in Fig. 5 clearly displays the differences in moisture regimes existing between the counties, and in particular the moisture stress in Texas County and the moisture availability in McCurtain County.

Another primary consideration in the choice of these three counties is their present land-use commitments and long-range plans. McCurtain, the third largest county in the state, was the number two pulpwood (roundwood) producing county in the entire southern United States in 1974 (Bertleson 1975); over 74 percent of its land area is in commercial forests. On the other hand, the economy of Texas County, the second largest county in the state, is based almost entirely on agriculture. Producing three-fourths of the state's corn and containing the highest concentration of cattle (primarily in feedlot operations), Texas County's economy has been built on high-subsidy agriculture. Cleveland County, although less than a third the size of Texas or McCurtain counties, offers a greater mixture of land-use types. In particular, whereas Texas and McCurtain counties are rural, Cleveland County offers the opportunity to evaluate more urbanized area.

The literature pertaining to these counties varies from scarce to abundant with the greatest proportion dealing with central Oklahoma. Principal papers discussing the natural systems in and around Cleveland County include work on grassland structure and function (Rice 1952, Penfound and Rice 1957, Perino and Risser 1972), succession (Rice 1964, Rice and Pancholy 1972), bottomland forests (Rice 1965), post oak-blackjack oak forest structure (Johnson and Risser 1975), dynamics

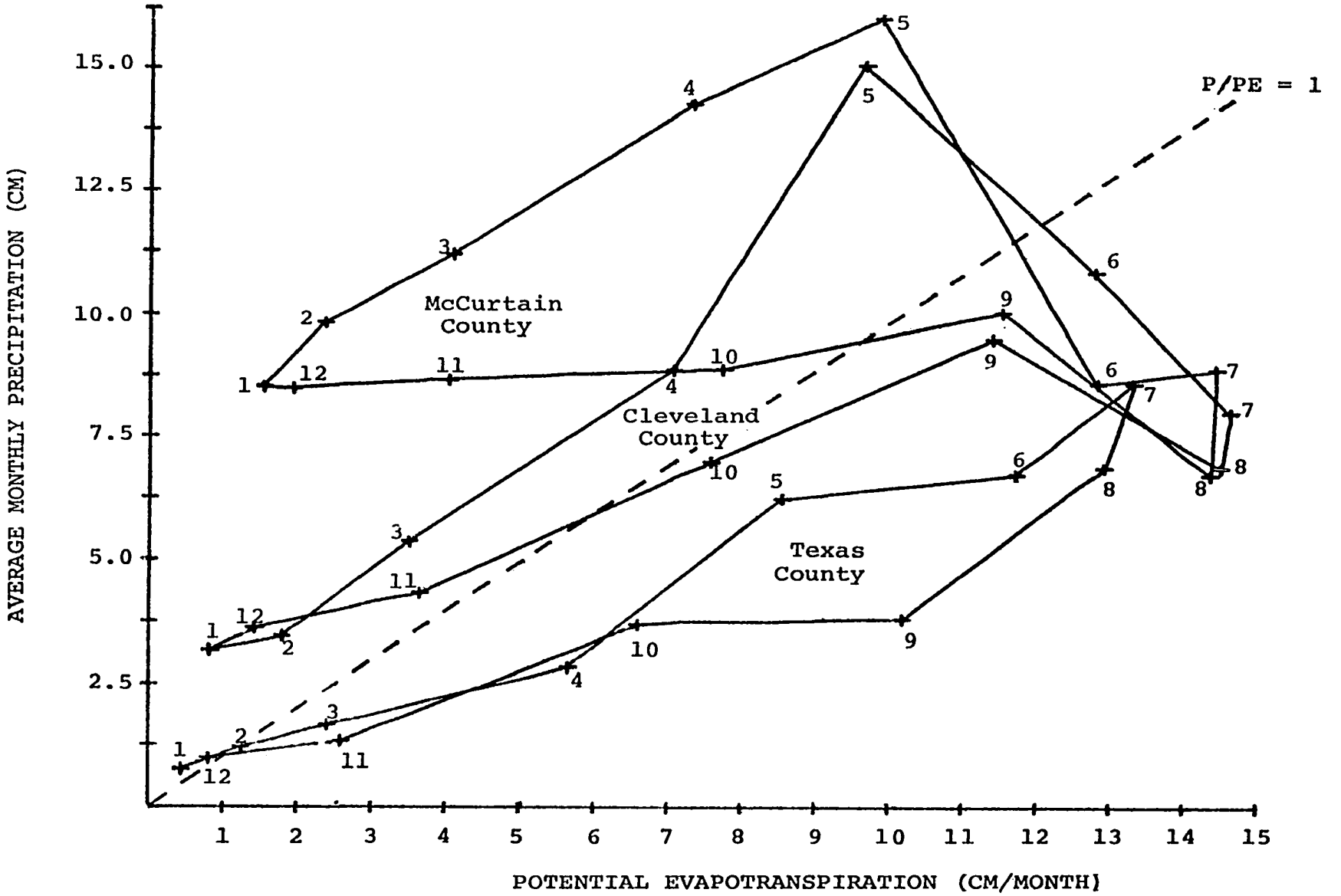

Figure 5. Climogram of monthly precipitation and potential evapotranspiration in Cleveland, McCurtain and Texas Counties.

(Johnson and Risser 1974), and environmental relationships (Johnson and Risser 1972, 1973). Information on the natural systems in southeast Oklahoma are almost purely descriptive (Little and Olmstead 1931) or relate to forest resources (Sternitzke and Sickel 1968). Ecosystem investigations in Texas County appear to be non-existent. However, similar systems to those occurring in the county have been investigated in neighboring regions of Kansas, Texas, and Colorado (Albertson 1937, French 1971).

Soils of the regions are described by Gray and Galloway (1969). Hydrology and geology of the counties are found in Wood and Burton (1968), Wood and Hart (1967), and Davis (1960). A variety of other sources of information was used in the compilation of the following county descriptions. These sources range from climatic data to environmental impact statements; some of the key literature sources include information on economic projections (Doeksen and Shreiner 1971), agricultural production and budgets (Schwartz 1975, Williams 1975, Fawcett 1975), the urban-rural ecosystem (Parton 1972), and gross energy budgets (Drysdale and Calef 1976).

Texas County

Texas County, encompassing 517,604 hectares, is located in the Oklahoma Panhandle and is bordered on the north by Kansas and south by Texas (Fig. 4). The past history of the area is not exceptionally varied with one of its major distinctions being part of No Man's Land from the mid-to late 1800's. Settlement in the area did not begin until the 1890's, and the area was the heart of the Dust Bowl during the mid-thirties.

Physical Features. Texas County is located in the high plains section of the Great Plains province. The elevation ranges from 1160 m in the west to 790 m in the east. About two-thirds of the county consists of upland plains that are nearly level to gently undulating. The remaining area consists of eroded, rough breaks and narrow flood plains along streams. The Beaver River is the principle stream in the county, entering on the southwest and exiting on the eastern border. It has a number of small tributaries, and occasionally, its western channel dries up.

The soils of the county can be divided into eight major groups (USDA 1961) of which only the principle ones will be mentioned here. Foremost is the Richfield-Ulysses soil association which occupies about half of the land area in the county in the level plains. The soils are deep clayey with surface texture ranging from clay loam to loam. Most of the association is cultivated (mainly wheat) and much of it is irrigated. Approximately 28 percent of the land, primarily in the northeastern section of the county, is made up of soils of the Richfield-Dalhart association consisting of deep loams and sandy loams. Most of the association supports crops including wheat, sorghum, and corn. The third major association, classified as caliche breaks, occupies over one-fourth of the county and is used for range as the soils are often calcareous clay, rough outcroppings of bedrock, and shallow loamy although some soils are deep and loamy. The remainder of the major associations within the county range from deep sandy hill and soils to deep broken land soils.

Climate. Texas County possesses a semi-arid climate averaging only about 46 cm precipitation per year, experiencing a low of 23 cm in 1952 and a high of 69 cm in 1942. More than half of the precipitation comes in late spring and summer. The average annual potential evapotranspiration calculated according to Thornthwaite (1954) is 76.4 cm with pan evaporation measured at Goodwell, Oklahoma, averaging 175 cm from April to October. The area often experiences extreme fluctuations between daily high and low temperatures. Average monthly temperatures range from 1.8°C in January to 26.2°C in July. The average duration of the growing season is between 185 and 180 days. Average wind velocity is approximately 4 mps (meter per second) with an afternoon high of 7.2 mps and a morning low of 2.7 mps (Texas County Conservation District 1973, U.S. Corps of Engineers 1973).

Hydrology. Although some of the streams can be relied upon as sources for livestock watering, none are dependable enough for human drinking water supplies or irrigation. The primary source of water for domestic and livestock use and irrigation comes from subsurface deposits in the Ogallala Formation which extends well beyond the limits of the county. Although the aquifer is a source of more than adequate water for use within the county, withdrawals have exceeded natural recharge every year since 1954 (Bekure 1971). The U.S. Army Corps of Engineers is currently constructing a 2160 ha impoundment within the county for purposes of water supply and flood control. This will be the only surface water area of appreciable size although two small man-made lakes are present in the county.

Vegetation. The primary naturally occurring vegetation in the county is shortgrass prairie on the upland plains (Duck and Fletcher 1945). Major species include bluegrama (Bouteloua gracilis), hairy grama (B. hirsuta), black grama (B. eriopoda), and sideoats grama (B. curtipendula), as well as buffalograss (Buchloe dactyloides) and little bluestem (Andropogon scoparius).

The vegetation of the eroded break areas include blue and sideoats grama in greater density than the upland prairie (U.S. Corps of Engineers 1973), and hairy grama, little bluestem, buffalograss, witchgrass (Panicum capillare), vine mesquite (P. obtusum), sand dropseed (Sporobolus cryptandrus) and sand bluestem (Andropogon hallii). Also occurring in the break areas and in overgrazed upland areas are sagebrush (Artemisia fillifolia), saltbush (Atriplex argentea), small soapweed (Yucca glauca), and prickly pear (Opuntia sp.). Dominants occurring in the stream floodplain include cotton wood (Populus deltoides), sandbar willow (Salix interior), peach leaf willow (S. amygdaloides), tamarisk (Tamarix gallica), mulberry (Morus rubra) and sagebrush.

Socio-economic Characteristics. Population of Texas County according to the 1970 Census was 16,352 representing a 15.5% increase from 1960 and a density of 3 people/km^2 (less than half of the people classified as residing in an urban area). The major population center of the county is Guymon with a population of 7,764. Other towns of considerable size are Hooker (1615), Goodwell (1947), and Texhoma (992). However, much of the land area annexed by these towns is highly

rural, thus a significant percent of the population lives in areas by no means considered urban.

The economic base for the county is almost entirely based on agricultural commodities. In 1970, total retail sales for the county were approximately 36 million dollars, of which a considerable portion was spent for agricultural support equipment. Total agricultural sales were over $93 million, with over $16 million from crop sales and $77 million from livestock sales. Only 4.5% of the county's 6000 man labor force is listed as unemployed.

As mentioned, the primary economic activity in the county is agriculture with cropland exceeding 314,000 ha of which more than 101,000 irrigated by over 1100 irrigation wells. Nearly 213,000 ha are classified as rangeland although most has suffered from past over-grazing and supports little current grazing activity. Beef production is primarily accomplished through feedlot operation which has an annual capacity of nearly 300,000 head. The major crops produced in the area are wheat, sorghum and corn with some other small grains and hay crops. Sorghum and corn are grown on irrigated land with wheat grown on both irrigated and dry land. Average farm size in the county is 525 ha with a value of $130,000.

Texas County is located on top of the Hugoton gas field, one of the largest known natural gas fields in the world. Natural gas along with crude oil from a number of fields in the county are the prime mineral resources with sand, gravel and helium also contributing. In 1975, over 250 million MCF of gas were exported from the county along with 7.7 million barrels of oil.

Cleveland County

In contrast to the other two counties in the study, Cleveland County has relatively little land area, only 144,842 ha, and ranks 70th (of 77) in the state in size although it ranks 4th in population. Located in the center of Oklahoma, the county was formally opened to settlement in the 1889 land rush, and by 1900 was almost completely settled in homestead units of 65 ha (160 acres). Today the northern half of the county is part of the major standard metropolitan statistical area (SMSA) in the state (with Oklahoma County).

Physical Features. Cleveland County is triangular in shape having its northern border running due east-west and its eastern border north-south. The third side is bounded by the South Canadian River which flows from the northwest to the southeast corner of the county. The entirety of Cleveland County lies within the central Redbed Plains physiographic province. Elevation ranges from 290 m above sea level in the southeast to 415 m in the northwest. The terrain is undulating to gently rolling with the occurrence of nearly level bench terraces adjacent to the South Canadian River which occasionally are broken up by sandstone escarpments. The county is underlain by the Permian redbeds consisting of shale and sandstone formations.

Soils. Soils of the county can be categorized under three general topographic areas: 1) the sandstone, forested hills; 2) the upland prairies; and 3) the alluvium-filled valleys of major streams. Soils of the forest uplands, primarily of the Darnell-Stephenville association, are shallow to deep light-colored sandy soils with reddish-brown sandy clay to clay loam subsoils. They have developed under

blackjack-post oak or oak-hickory forests and are low in productivity. Renfrow-Zaners-Vernon and Bethany-Tubler-Kirkland are the major associations occurring in the upland prairies. Most of the soils have dark medium to heavy-textured acid to neutral surface layers and friable silt loam to heavy clay subsoils. These soils developed under a cover of tall grass species and much of it is now cultivated or used for tame pasture. Soils of the lowlands are principally of the Vanoss-Minco-Yahola association. Ranging from silt loams to sandy alluvium, many of the soils are fertile and cultivated or used for pasture. Damage from flooding, however, is a common occurrence.

Climate. The climate of Cleveland County is controlled by the interaction of tropical and polar air masses and is characterized by wide ranges in temperature and wide deviations from average precipitation. Monthly average temperatures vary from 3.8°C in January to 27.8°C in July and August. Most precipitation falls in the spring, averaging 15.2 cm in May and 87.6 cm per year. Relative humidity averages around 60 percent and the average daily wind speed is approximately 5.8 mps.

Hydrology. Cleveland County is drained by the South Canadian and Little Rivers and their tributaries. The southwest corner of the county is drained by the Canadian River and the south-central and southeastern parts of the county are drained by tributaries of Little River. Lake Thunderbird reservoir, with a surface area of 2470 ha, is situated on the upper reaches of Little River; the reservoir supplies water to Norman and Midwest and Del Cities (Oklahoma County) for municipal and industrial uses. Lake Stanley Draper on the northern edge of the

county has a surface area of 1130 ha and serves as a water supply for Oklahoma City. The major source of water for the reservoir is pumped in from Lake Atoka in the southeast section of the state. The county also possesses a large supply of groundwater located in the Garber-Wellington aquifer which underlies the county.

Vegetation. The county has three major types of vegetation: Cross Timbers on the hills and uplands in the eastern half of the county; tall grass prairie in the western half; and bottomland forests along the floodplains. The Cross Timbers vegetation is dominated by two species, blackjack and post oak (Quercus marilandica and Q. stellata, respectively). These two species often occur in dense proportions or often occur in a savannah formation. Black hickory (Carya texana) is also common in the area and at times lends itself to an oak-hickory forest. Dominants of the tall grass prairie include big bluestem (Andropogon gerardi), little bluestem (A. scoparius), prairie switchgrass (Panicum virgatum), and Indian grass (Sorghastrum nutans). Unfortunately, most of the true prairie in the county has disappeared due to over-grazing and cultivation of crops. The mature floodplain forests are dominated by American elm (Ulmus americana), green ash (Fraxinus pennsylvanica), and hackberry (Celtis occidentalis).

Socio-economic Characteristics. The population of Cleveland County in 1970 was 81,839, which represented a 71.9 percent increase from 1960 and placed it among the top ten fastest-growing counties in the United States. The population in 1975 exceeded 104,000. The 1970 population represented a density of 60 people/km^2. However, the majority of the population is concentrated in the northern one-third

of the county in the cities of Norman (52,285), Moore (18,761), and an extension of Oklahoma City (>5000). Other towns in the county include Lexington (1516) and Noble (2241).

The economy of Norman is dominated by the state institutions located there, the largest being the University of Oklahoma (employment 5000 and enrollment approximately 20,000). Other state institutions include Central State Hospital and the Oklahoma Cerebral Palsy Center. Approximately 38.3% of the work force commutes outside the county's boundaries to work, primarily in the Oklahoma City region.

County income from agricultural products has shown a continual decline in recent years and was only about $5 million in 1970 as compared to $10 million in 1960. The majority of the agricultural income is from beef production.

Deposits of natural gas and oil are located in the county and exports in 1975 amounted to 2.3 million barrels of oil and 3.5 mcf of gas.

McCurtain County

McCurtain County, located in extreme southeastern Oklahoma (Fig. 4), has an area of 485,000 ha. On the south it is bordered by the state of Texas and on the east by Arkansas. This area was one of the first settled in Oklahoma with settlements dating back to the later 1700's. Most early settlements were by Indian tribes, first Shawnee then Choctaw, with much of the southern Coastal Plain area being in plantation. The majority of permanent settlements occurred in the aftermath of the civil war. The majority of the land, however, has always been timbered.

Physical Features. McCurtain County transverses two major physiographic provinces; the southern half is in the inner Gulf Coastal Plain and the northern half is in the Ouachita Mountains. Topography varies from nearly level to very steep with elevation above sea level ranging from 76 m in the extreme southeast to 460 m in the northwest. Approximately 21 percent of the county consists of nearly level and gently sloping soils on floodplains and terraces. The remainder consists of gently sloping to very steep terrain encompassing a large percentage of moderately steep slopes. Rock outcroppings of shale and limestone are common.

Soils. Six of the ten soil orders within the country are present in McCurtain County: Alfisols, Entisols, Inceptisols, Mollisols, Ultisols, and Vertisols, with the majority of soils Ultisols. The principle soils in the county are categorized as being in one of ten soil associations which in turn fall under one of four landscapes (USDA 1974). Over fifty percent of the soils are deep to shallow over sandstone and shale and occur in the Ouachita Mountains. These soils, primarily loamy and well-drained, often contain a considerable amount of stones and rock fragments and support the growth of forests throughout their expanse. The major associations are Carnasaw-Sherwood and Goldston-Carnasaw-Sacul. Deep to very shallow soils over limestone, shale and clayey sediment are blackland soils and only occupy about four percent of the county. Deep soils over marine deposits of the Southern Coastal Plain make up 30% of the county area. Ruston-Tiak-Saffell, Kinta-Wrightsville and Felker-Kullit associations predominate and occur on uplands and terraces. The well-drained, loamy soils are

often used for tame pasture and some crops, while the poorly-drained loams are used for woodland and some tame pasture. The last major grouping of soils is deep soils occurring on flood plains and terraces of small streams and rivers. Most of the soils are formed in flood-plain alluvium along the Red River or a few other areas. The soils used primarily for agriculture tend to be either clayey or loamy and are often poorly-drained. Major associations are Pledger-Roebuck-Redlake, Sdvern-Oklared-Gallion, and Guyton-Oohlockonee.

Climate. McCurtain County has a warm, humid sub-tropical climate and the weather is strongly influenced by air masses from the Gulf of Mexico. Annual precipitation averages from 122 cm/yr near Idabel to over 142 cm/yr in the higher elevations and is well-distributed over the year as seen in Fig. 5. In the county, the minimum annual precipitation ever recorded was 71 cm with a maximum of over 200 cm. Average monthly temperatures range from 6.2°C in January to 27.7°C in July. The warm temperatures and adequate precipitation result in a highly favorable growing season which averages about 225 days in the southern half of the county.

Hydrology. Due to the abundant annual rainfall, water is plentiful in McCurtain County. Three major rivers exist within the county and the Red River flows along the entire southern boundary. The Mountain Fork and Glover Creek rivers drain the northern portion of the county and eventually flow into the Little River which enters McCurtain County from the west exiting on the east. All water eventually connects with the Red River in Arkansas. Two major reservoirs, Pine Creek (1540 ha) and Broken Bow (5750 ha) are in the county with a third

(Lukfata 2470 ha) scheduled for construction. All reservoirs are under the authority of the U.S. Corps of Engineers. Water supply for the main towns is obtained from either the Little or Mountain Fork Rivers. Much of the domestic and stock water supplies comes from groundwater. Streams and farm ponds furnish large amounts of stock water.

Vegetation. The favorable climatic conditions allow McCurtain County to possess the most diverse assemblage of vegetation in the state (Williams 1973, Risser and Rice 1971a). Five major vegetational types naturally occur within the county: oak-pine in the timbered sandstone and shale area; oak-hickory on the timbered rolling southern coastal plain; loblolly pine on the lowlands or flatwoods coastal plain; cypress bottoms along some of the bottomland streams, rivers and ox-bow lakes; and floodplain forest along other river and stream bottoms including the Red River. A small extension of oak-savanna also occurs on the southwestern border of the county.

Major dominants of the oak-pine forest are shortleaf or yellow pine (Pinus echinata), white oak (Quercus alba), post oak (Q. stellata), blackjack oak (Q. marilandica), loblolly pine (P. taeda), black hickory (Carya texana), and mockernut hickory (C. tomentosa). The oak-hickory is characterized by white oak, blackjack oak, post oak, red oak (Q. rubra), black oak (Q. velutina), sugar maple (Acer saccharum), black hickory, scaley bark hickory (C. lacinosa) and mockernut hickory. Loblolly pine is the principal dominant occurring in the flatwoods area, along with sweet gum (Liquidambar styraciflua) and black gum (Nyssa

sylvatica). Cypress bottomlands are dominated by bald cypress (Taxodium distichum), sweet gum, black gum, post oak, willow oak (Q. phellos), and water oak (Q. nigra). The floodplain forest includes sweet gum, black gum, sycamore (Plantanus occidentalis), white oak, willow oak, and water oak (Q. nigra). The savanna extension into the county consists of big and little bluestems (Andropogon gerardi and A. scoparius) and post and blackjack oaks. Overall, approximately 95% of the county is capable of supporting forests. The majority of the original forest has been cut over and/or burned at one time or another.

As will be noted later, many of the above naturally-occurring vegetation types have been replaced with loblolly pine monocultures.

Socio-economic Characteristics. The population of McCurtain County according to the 1970 Census was 28,642, equalling a population density of 6.1 persons/km^2 and representing a growth rate of 10.8 percent from 1960. People living in rural areas make up 69% of the population. Idabel is the main population center with a population of 5946. Other towns include Broken Bow (2980), Wright City (1068) and Valiant (840).

Although some industry exists in McCurtain County, including chicken and egg production concerns and a clothing industry, the important economic base in the county is timber and wood products. This revolves around the region's prolific forests and the whole-scale commitment of the area by Weyerhauser, Inc. which began operations in the county in 1969. Perhaps the best evidence to this is that the average family income more than doubled between 1967 and 1970, jumping

from $2455 to $5346. Total agricultural sales in the county were $8.6 million in 1970, of which 85 percent was from poultry and livestock.

For years, agriculture has been the traditional source of livelihood in the county with a corn-cotton culture similar to that of the deep South. In recent years, however, corn has been replaced by peanuts and cotton by soybeans. Extensive areas of the county, including both the forested and non-forested areas, are grazed. The livelihood of the county now centers around timber production and 75 percent of the county is now occupied by commercial forests. Tourism is also important in the county and the presence of the Broken Bow and Pine Creek reservoirs have greatly increased the number of non-resident recreational users. Naturally occurring energy supplies are minimal to non-existent and although some oil deposits have been located in the county, the cost of extraction greatly exceeds their potential yield.

CHAPTER III

METHODS

The methods and the sample design to be used in any study are, in a large part, dictated by the final goals of the investigation. Thus the goals of this dissertation dictated that the study be carried out in six major steps: 1) develop a primary productivity profile for Oklahoma; 2) for each of the three counties selected for intensive study identify the major components and causal forces; 3) prepare macro-scale land-use energy models for each land-use type within each county; 4) collect the pertinent data; 5) analyze the data; and 6) perform computer simulations where more in-depth analysis is required.

Primary Productivity Profile

Briefly, the primary productivity profile of Oklahoma was undertaken in three parts. First, data were gathered on the primary production of the major land-use types found in the State of Oklahoma, synthesized through the use of a common denominator (annual net primary production – the total amount of organic matter produced by the vegetation on a yearly basis) and portrayed visually by means of computer graphing techniques using the SYMAP synagraphic mapping program

(Dudnik 1971, Sharpe 1975). The determination of the major land-use types existing within the state was accomplished through the use of the Oklahoma Conservation Needs Inventory (1970), the 1969 Census of Agriculture (USDA 1970), various forest land surveys (Sternitzke and Van Sickle 1968, Earles 1976) and maps of Oklahoma's original vegetation (Duck and Fletcher 1943, Kuchler 1964). Initially, a total of 30 major land-use types were designated, but eventually this list was shortened to 21 (listed below) primarily because of data limitations on certain more specialized types [e.g. only one composite forest category when in actuality it might be subdivided into six main subcategories (oak-hickory, postoak-blackjack, oak-pine, loblolly pine, bottomland, and cypress bottoms)].

AGRICULTURAL
- Alfalfa
- Wild Hay
- Other Hay
- Barley
- Oats
- Wheat
- Corn
  - Grain
  - Silage
- Sorghum
- Soybeans
- Peanuts
- Cotton
- Orchard Crops
- Forests

RANGELAND

PASTURELAND

WATER
- Large
- Small and Streams

URBAN

OPENLAND

RIGHT-OF-WAY

The next step involved the determination of the annual net primary production occurring on each of the 21 land-use categories. The techniques involved converting agricultural yields or land-use types to annual net primary production – the total amount of organic matter produced by the vegetation on a yearly basis. This was done

employing the year 1971 as one with an "average climatic regime." Primary productivity figures were derived similarly to other primary production work done in New York and Massachusetts (Art and Marks 1973), North Carolina (Reader 1973, Sharp and Lieth 1974), Tennessee (DeSelm 1971), and Wisconsin (Stearns, et al. 1971; Cottam, et al. 1973). Specific details of the conversion processes followed for Oklahoma are described in Klopatek and Risser (1977).

The second phase of the primary productivity profile involved the correlation of the primary production patterns within Oklahoma with the natural abiotic factors (temperature, precipitation, soil fertility, etc.) and artificial subsidization (fertilization, irrigation, etc.). This was accomplished by utilizing the CORSYMAP program (Klopatek 1974) to run a linear regression analysis on the SYMAPs to be compared and producing a new correlation map. At this time a discussion of the methods utilized to compile a potential soil productivity map is appropriate.

Early in this study, it was determined that a need existed for a soil productivity map of Oklahoma. Based on rating devised by Hole (1953) in Wisconsin, Cottam, et al. (1973) prepared such a map. Soil ratings were calculated for each economic township within the state of Wisconsin based on the weighting and combination of three factors: physical properties per soil type, growing season length, and soil fertility level. The compiled value was then assigned to each township and a soil productivity map was produced.

Unfortunately, this type of a system has not been implemented within Oklahoma. Smith, et al. (1959) compiled weighted fertility

indices of various nutrients for the major soil associations but no attempt was made to rate the soils as to their respective productivities. Gray (1966) compiled a listing of the agricultural productivity of key soils in Oklahoma under two levels of management. His listing included estimated annual average crop yields for a variety of crops customarily grown within the state. While this publication did not list specific productivity ratings for soil types or associations, it did offer a starting point for the construction of a state-wide soil productivity map.

The estimated yield figures listed by Gray (1966) for various crops are the result of several factors including soil texture and nutrient status, slope, moisture balance, growing season and other climatic conditions. By examination of crop response on the range of soil types in Oklahoma, a relative value can be derived to compare one soil type or association with another.

Four crops, alfalfa, oats, sorghum, and wheat, were chosen as productivity indicators across the state for the purpose of constructing a soil productivity map. These crops are the most widely planted crops in the state. The method employed to establish a final rating for the soil associations is as follows.

The estimated yield figures for crops under customary management (Gray 1966) were summed for each crop for each soil type and their means and standard deviations determined (Table 1). A range of plus and minus one standard deviation around the means was calculated and this range was scaled from 0 to 100. Soil types were then assigned to soil associations and the mean yield for each crop was determined for

Table 1. The mean and standard deviation on estimated yields of alfalfa, oats, sorghum and wheat on all soil types listed by Gray (1966) for Oklahoma.

Crop	Mean Yield	Standard Deviation
Alfalfa (ton/a)	1.6	0.9
Oats (bu/a)	24.5	7.7
Sorghum (bu/a)	22.0	7.9
Wheat (bu/a)	15.0	15.0

each association. The soil association mean yield was then compared to the overall range and given an appropriate scaled value ranging from 0 to 100. The four scaled values (one for each crop) were combined to give a value (0-400) for the respective soil association. An example of this can be seen using the Renfro-Zaneis-Vernon association, a common soil of the Central Reddish Prairies in Oklahoma (Gray and Galloway 1969).

Soil Association: Renfro-Zaneis-Vernon

Crop	(Average Yield	–	Minimum Level)	x	Scaling*Factor	= Total
Alfalfa	(0.9	–	0.7)	x	55.56	= 11.11
Oats	(24.5	–	16.9)	x	6.49	= 49.32
Sorghum	(24.0	–	14.1)	x	6.33	= 62.67
Wheat	(15.4	–	0)	x	3.33	= 51.28
					Total Association Rating	= 174.38

*The scaling factor places the yield figures into a rating of 0-100 after the minimum level value (– one standard deviation from total mean) has been subtracted. The value below the minimum will be zero while any value above the maximum (total mean plus one standard deviation) will equal 100.

Calculations were made for all the soil associations listed by Gray and Galloway (1969) with each one receiving a numerical rating from 0 to 400. The soil associations with their respective ratings are listed in Table 2.

After compilation of the soil association ratings, it was then necessary to assign a rating to each county for use with the SYMAP program. This was done through the determination of the area occupied within each county by a particular association. These areas were converted to a percentage basis, multiplied by the respective rating and

Table 2. Relative potential productivity of major soil associations in Oklahoma.

Resource Area	Soil Association	Relative Rating (0-400)
Ouachita Highlands		
	Hector-Pottsville	174
	Enders-Conway-Hector	116
	Atkins-Pope	116
Forested Coastal Plain		
	Kirvin-Cuthbert-Bowie	42
	Bowie-Caddo-Boswell	44
	Miller-Yahola-Teller	239
Grand Prairie		
	Durant-San Saba-Tarrant	206
	Tarrant	0
	Tarrant-Newtonia	101

Table 2 (continued)

Resource Area	Soil Association	Relative Rating (0-400)
Ozark Highland		
	Bodine-Baxter-Nixa	47
Cherokee Prairie		
	Labette-Summit-Sogn	285
	Sogn-Summit	300
	Parson-Dennis-Bates	256
	Verdigris-Osage	305
Cross Timbers		
	Darnell-Stephenville	54
	Dougherty-Teller-Yahola	96
	Windthorst and Chigley	90
	Granitic Mountains-Tishimingo Soils	0

Table 2 (continued)

Resource Area	Soil Association	Relative Rating (0-400)
Reddish Prairie		
	Renfro-Zaneis-Vernon	174
	Bethany-Tabler-Kirkland	220
	Grant-Pond Creek-Nash	199
	Cobb-Quinlan	86
	Vanoss-Minco-Yahola	313
	Yahola-Port-Reinach	224
Rolling Red Plains		
	Tillman-Vernon	127
	Foard-Hollister-Tillman	141
	Rough Broken Land-Vernon	0
	Woodward-Carey-Quinlan	50
	Woodward-Dill-Quinlan	60

Table 2 (continued)

Resource Area	Soil Association	Relative Rating (0-400)
	Carey-St. Paul	97
	Rough Broken Land-Quinlan	0
	Enterprise-Tipton-Yahola	217
	Pratt-Tivoli	95
	Nobscot-Brownfield-Miles	144
High Plains and Plains Border		
	Potter-Manker	129
	Richfield-Dalhart-Portales	130
	Pullman-Richfield	128
	Vona-Dalhart-Tivoli	122
	Travesilla-Berthoud-Rough Stony Land	0

the combination of all associations in the county totalled to give a county rating which was then divided by four to provide a county relative rating ranging from 0 to 100. Aquatic areas were not included in the county area calculations.

Example: Pittsburg County

Soil Association	Rating	x	Fraction of County Area	=	Total
Hector-Pottsville	174	x	.63	=	109.62
Parsons-Dennis-Bates	256	x	.27	=	69.12
Dougherty-Teller-Yahola	96	x	.06	=	5.76
Darnell-Stephenville	54	x	.01	=	.54
Enders-Conway-Hector	116	x	.02	=	2.32
			TOTAL		187.36
			÷4		
Estimated county soil potential productivity rating				=	46.84

The final figure is an estimated potential soil productivity rating on a county basis. The ratings for each county are listed in Table 3. Figure 6 displays the results of the calculations presented through the use of the SYMAP Program.

Highest ratings occur in those counties in the north-central and northeastern part of the state excluding those on the northeastern border. These soils, occurring in the Cherokee Prairies and Bluestem Hills regions of Oklahoma, have developed under tall grasses and are characterized by high organic matter, nitrogen, and adequate supplies of moisture. The soils of the Cherokee Prairies developed on sandy and clayey shales and sand stones while those of the Bluestem Hills developed from limestone and limey clays. The soils extension of the Flint Hills is one of the most productive native grass pastures in the United States (Hobbs 1957).

Table 3. Relative potential soil productivity of Oklahoma counties.

County	Rating	County	Rating
Adair	20.96	Dewey	13.69
Alfalfa	43.59	Ellis	30.18
Atoka	35.05	Garfield	49.52
Beaver	30.83	Garvin	32.34
Beckham	21.63	Grady	40.73
Blaine	45.42	Grant	50.06
Bryan	36.59	Greer	23.77
Caddo	25.31	Harmon	28.42
Canadian	45.33	Harper	12.63
Carter	27.58	Haskell	50.68
Cherokee	30.36	Hughes	38.26
Choctaw	27.35	Jackson	39.51
Cimarron	36.66	Jefferson	36.32
Cleveland	36.62	Johnston	18.07
Coal	46.09	Kay	63.61
Commanche	9.76	Kingfisher	38.07
Cotton	35.48	Kiowa	29.87
Craig	66.39	Latimer	42.22
Creek	23.94	Leflore	36.69
Custer	12.37	Lincoln	27.01
Delaware	19.07	Logan	34.08

Table 3. Relative potential soil productivity of Oklahoma counties.

County	Rating	County	Rating
Adair	20.96	Dewey	13.69
Alfalfa	43.59	Ellis	30.18
Atoka	35.05	Garfield	49.52
Beaver	30.83	Garvin	32.34
Beckham	21.63	Grady	40.73
Blaine	45.42	Grant	50.06
Bryan	36.59	Greer	23.77
Caddo	25.31	Harmon	28.42
Canadian	45.33	Harper	12.63
Carter	27.58	Haskell	50.68
Cherokee	30.36	Hughes	38.26
Choctaw	27.35	Jackson	39.51
Cimarron	36.66	Jefferson	36.32
Cleveland	36.62	Johnston	18.07
Coal	46.09	Kay	63.61
Commanche	9.76	Kingfisher	38.07
Cotton	35.48	Kiowa	29.87
Craig	66.39	Latimer	42.22
Creek	23.94	Leflore	36.69
Custer	12.37	Lincoln	27.01
Delaware	19.07	Logan	34.08

Table 3 (continued)

County	Rating	County	Rating
Love	38.78	Pittsburg	46.86
McClain	50.09	Pontotoc	25.75
McCurtain	36.03	Pottawatomie	23.06
McIntosh	51.91	Pushmataha	34.71
Major	19.23	Roger Mills	16.56
Marshall	39.37	Rogers	60.48
Mayes	57.80	Seminole	25.08
Murray	13.77	Sequoyah	48.19
Muskogee	59.24	Stephens	27.00
Noble	47.01	Texas	32.33
Nowata	58.51	Tillman	40.52
Okfuskee	37.83	Tulsa	67.88
Oklahoma	29.75	Wagoner	64.80
Okmulgee	44.33	Washington	67.24
Osage	45.98	Washita	16.65
Ottawa	45.31	Woods	27.41
Pawnee	55.08	Woodward	18.93
Payne	40.46		



Figure 6. Relative potential soil productivity map of Oklahoma.

Lowest ratings occur in western Oklahoma in the Rolling Red Plains region where the soils are primarily inceptisols. Although with the exception of nitrogen, most plant nutrients in these soils are adequate; they are often characterized by low moisture and aeolian stress. Low ratings are also found in Commanche and Murray counties, both of which have large expanses of rough, rocky land and in Beckham and Dewey counties where soils are composed of rough, broken land with considerable outcropping of gypsum and sandstone, respectively.

Correlations between Oklahoma's potential soil productivity map and primary productivity will be discussed later in this publication, but at this time it is interesting to note the similarities between potential soil productivity and the map of the original vegetation of Oklahoma (Fig. 1). The potential soil productivity map closely resembles that of the natural vegetation despite the fact the data used to construct the map were derived solely from the agricultural crop performance. This demonstrates the close if not inseparable coupling that exists between the natural occurring vegetation and soil in terrestrial ecosystems.

The potential soil productivity map is not a definitive work on the soils of Oklahoma but rather a visual interpretation using a number of relative values expressing a limited number of parameters. More quantitative data need to be assembled on Oklahoma's soils (Gray and Stannke 1970). Perhaps as more data are accumulated to classify the soils according to the Seventh Approximation, coupled with techniques such as those used by the Soil Conservation Service (1974), a more detailed soil productivity map of Oklahoma can be constructed.

In the final, and perhaps most important phase of the productivity profile, the patterns found within the state were evaluated to formulate both questions and suggestions concerning current and future usage of the ecosystems found in Oklahoma. Although some of the results of this study will be discussed in later pages, the detailed study in its entirety can be found in Klopatek and Risser (1977).

System Components and Causal Forces

The decision to examine the three counties on a detailed basis also dictated the boundaries of the systems to be evaluated, e.g. the county boundaries. County boundaries are ecologically arbitrary and cut irreverently across physiographic regions, watersheds and vegetational communities. However, these boundaries can be assumed to last indefinitely (Shafer, et al. 1974) and are consequential ones that will structure future management decisions. Effectively, the delineation of the system's boundaries separates the internal components and processes from the external causal forces which are independent of the interactions occurring within the system.

Since the objective of the study was to evaluate land-use energetics of the counties, the principal compartments or state variables in the systems were determined to be the major land-use categories. Six major land-use categories were arrived at which were applicable to each county: 1) agricultural land; 2) grazing land including rangeland and pasture; 3) forest land, including both managed and non-managed types; 4) urban land including residential, commercial and industrial sectors; 5) water areas, both naturally occurring and

man-made; and 6) right-of-ways, including highways, railways and transmission line corridors. Urban land and water areas were not evaluated in this dissertation.

After the compartments of the systems were identified, the causal forces or forcing functions of the system were determined. These included both natural and fuel-based energies flowing into the county as well as money, goods, and services. The causal forces were separated from the rest of the system since they deliver a force from outside the system irregardless of what is happening within the system. These forces may be constant or time variant and require a complete description of the function with time.

Construction of Models

Following the procedure of Gilliland and Risser (1977), the causal forces and storage compartments were coupled according to their mode of interaction. After this process has been completed a diagram or model of the system is obtained. The models at this point are both qualitative and to a degree subjective. They can, however, be used to help organize and direct the research on the system, which through successive iterations, can assist in later model refinement.

To implement the modeling process in energy flow analysis, Odum (1972b, 1975a) has developed an energy flow language which visually and mathematically conveys the structure and function of the system according to the laws of thermodynamics and Lotka's maximum power principle. The primary symbols used in this discussion are depicted in Fig. 7. An in-depth explanation and mathematical description of the

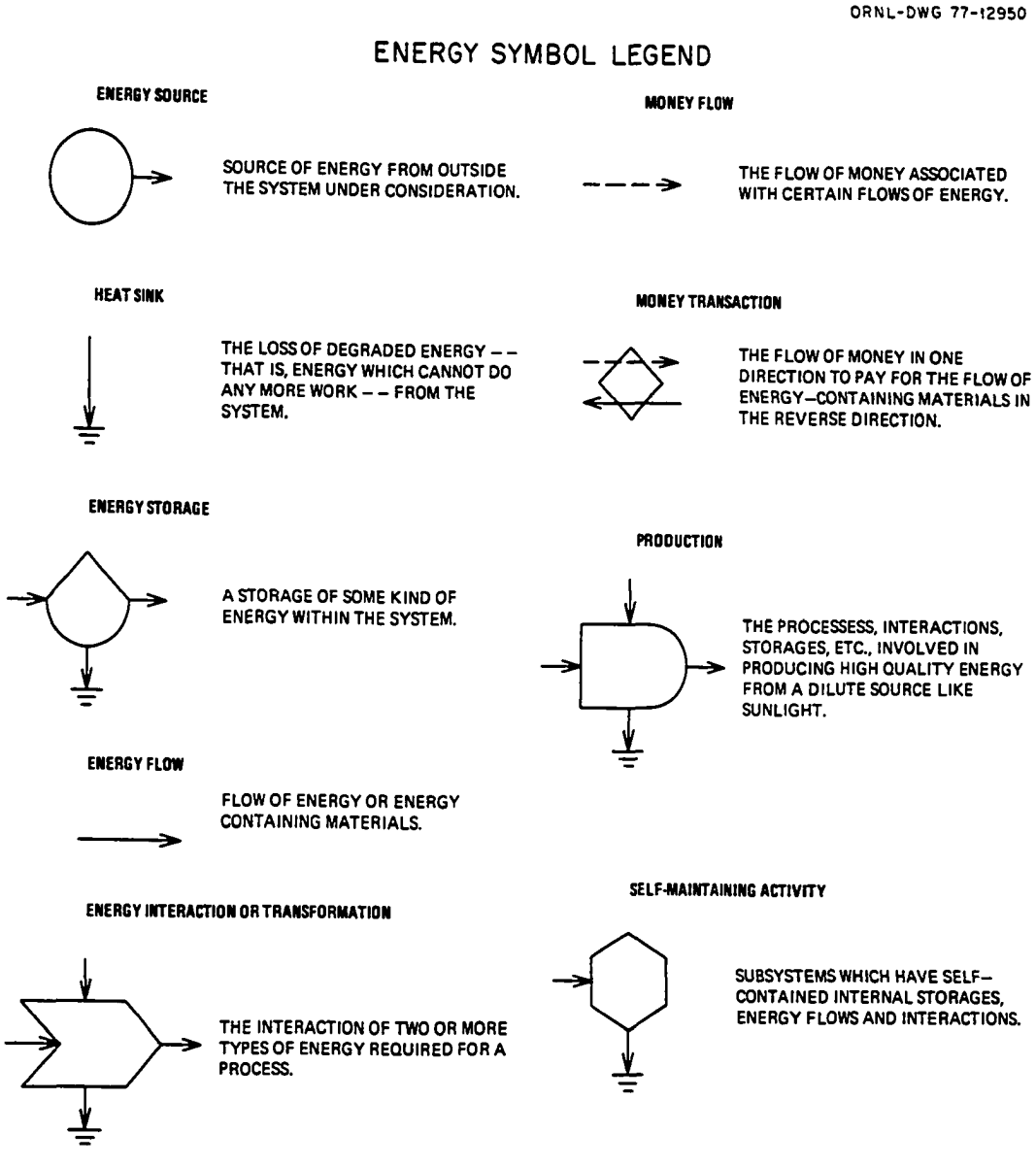

Figure 7. Description of the principal energy language symbols employed in this dissertation.

symbols can be found in Odum (1972b, 1975a). The energy-flow diagram can also be thought of as a way of writing the differential equations which are an intermediate step to digital or analog simulation. The differential equations describing the changes occurring in the storage compartments are a composite of the inflows and outflows of the compartments and thus are translations of the energy flow diagram. This does not mean to suggest that all that needs to be done is to delineate the compartments and associated flows. It should be understood that both expertise and research is required to compile the model, ascribe the interaction, and determine the coefficients.

The construction of the energy-flow model of agricultural land is presented as an example of the process of model development. Figure 8 depicts the generalized agricultural model for Texas County. Enclosed within the dashed lines are the agricultural crop units (the state variables) which make up the total agricultural land use in the county. These components are depicted as bullet-shaped symbols indicative of autotrophic compartments. Inside the compartments are two tank-shaped symbols representing stored energy or resources, one for standing crop (SC) and one for land area occupied by the crop (A). The circular symbols outside the enclosure are the causal forces or energy sources of the system. These energy sources which power the system include natural energies of sun, wind, rain; the fuel-based energy inputs of fossil fuel, fertilizer, machinery, etc. and irrigation which includes the costs of fuel and machinery.

The hexagon symbols in the diagram are indicative of heterotrophic or consumer compartments which require energy imports (materials

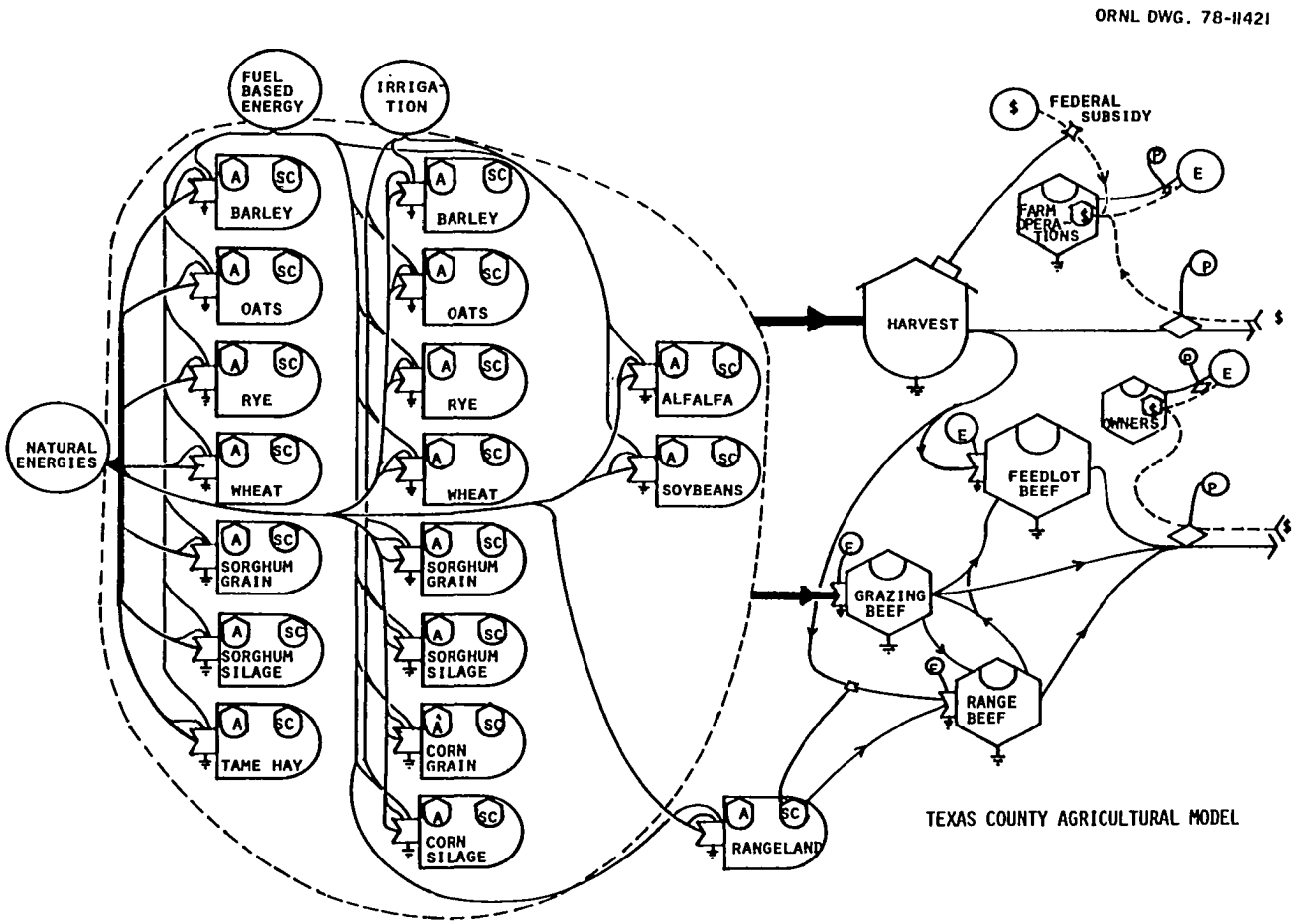

Figure 8. Generalized energy flow model of agriculture in Texas County, Oklahoma.

and food) for their existence. The compartments have not been included within the dashed lines because they do not directly affect the agricultural land area or production although the heterotrophic compartments may consume production from the agricultural compartments.

The solid lines which connect the causal forces and the compartments represent the flow of energy (including that energy embodied in materials). Flows represented by dashed lines depict flows of money, which flow in an opposite direction to energy (Odum 1973). The rate at which the flow of money is exchanged for that of energy is a function of the price (P) of the energy at that time. Energy flows often interact in a nonlinear fashion and thus they are shown as connecting within the interaction symbol (X). The combination of two (or more) types of energy flows within the interaction symbol are indicative that both types of flows must occur in order to produce the amplified flow leaving the interaction symbol. Note the heat loss or maintenance costs that occurs at each of these interactions. Using the example of the agricultural system, sunlight interacts with water, nutrients and machinery to produce food. Thus, all the energies are required to produce the crop.

The purpose of the model in Fig. 8 is primary for organization and direction. Although actual values can be (and were) obtained for all the compartments and flows, the size and resolution of the model proves unwieldly, both from a diagrammatic and a utilitarian point of view. Therefore, these larger models were aggregated and reduced to produce "macroscopic mini-models." The resultant agricultural model is shown in Fig. 9. Clearly the detail of the model

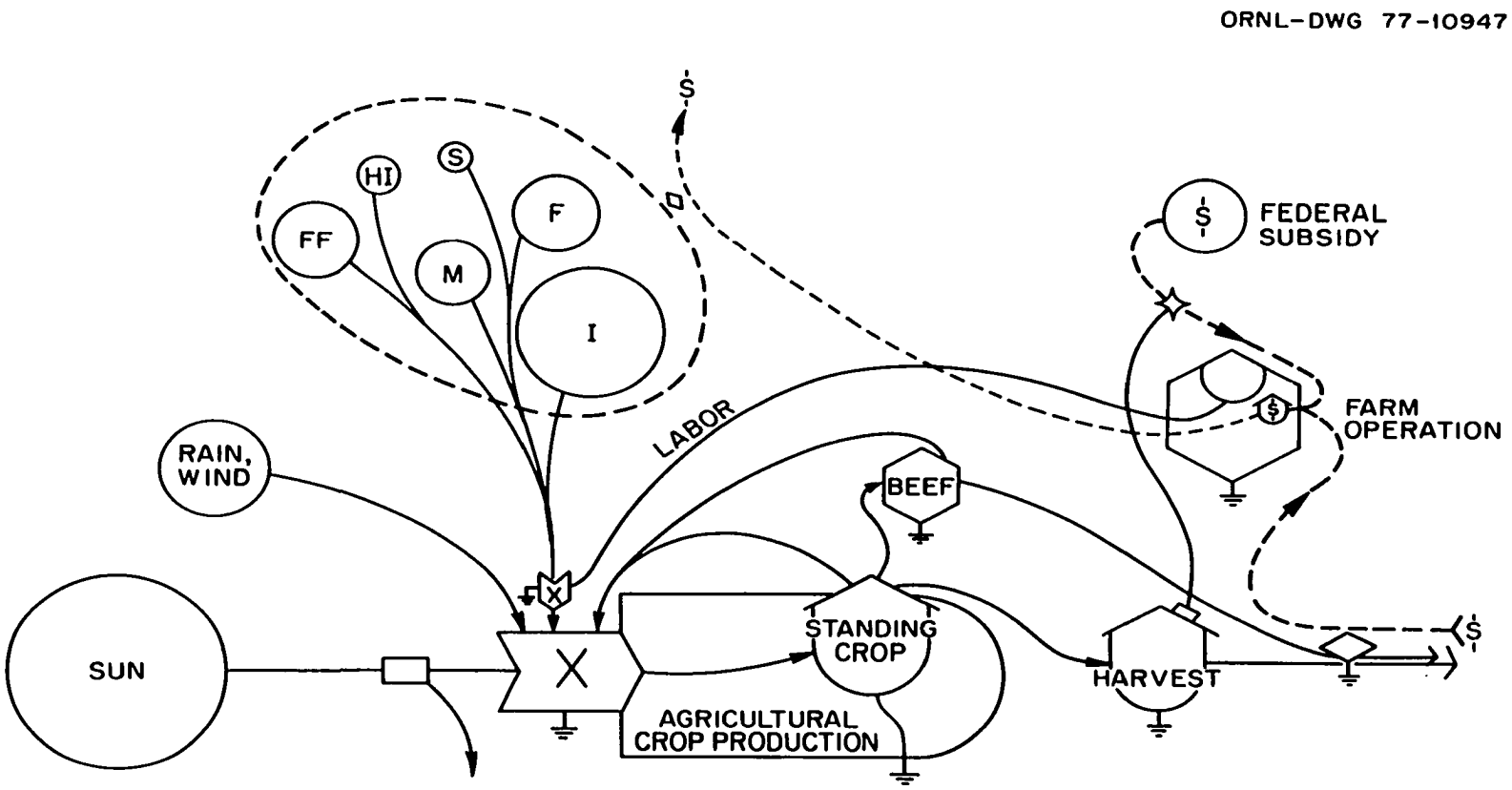

Figure 9. Macroscale, mini-model of agricultural energy flow in Texas County, Oklahoma.

presented is far from that in the previous model. However, the principal causal forces, compartments, and energy flows of interest are present. A discussion of the interactive relationships of the agricultural model will be presented later.

Data Acquisition

The data needed for this study came from a multitude of sources. Information on the land use came primarily from state and Federal agencies — USDA Statistical Reporting Service, Oklahoma Water Resources Board, Soil Conservation Service and others. The data used to compile the individual county land-use maps were obtained primarily from the USDA-SCS county offices and the state office at Stillwater, Oklahoma. The USDA-SCS has recently completed generalized land-use maps for each county in the state as part of its MIAD mapping program (USDA-SCS 1974). These maps were based on the most recent aerial photographs for each county. The maps were crosschecked through visual observations in each county to insure that the individual maps were representative. Individual land-use types, areas, i.e. reservoirs, were further referenced with information from the controlling agency.

The information on energy costs of processes associated with individual land-use types, as well as the sources and network of energy flow, were obtained from sources both in and out of Oklahoma. Typical examples of these sources were Crop and Livestock Budgets — Northwest Oklahoma (Fawcett 1975); Energy Requirements for Agriculture in California (Cervinka, et al. 1974); Annual Reports to the Federal Power Commission; the Energetics of United States (Drysdale and Calef 1976);

and Environmental Impact Statements from the Corps of Engineers. Other data sources are listed in the following text.

Data Analysis

Energy Analysis

The difficulty of analyzing mixed cultural and natural systems was previously discussed. A large portion of this difficulty stems not only from the structural dissimilarities of the systems and the quantification of the systems interaction but because of the compositional differences of the materials needed to support the systems. For example, natural systems require energy, water, and nutrients (as do cultural systems). Ecologists have been fairly adept in assigning energy values to sunlight and organic matter in ecosystems based on their heat equivalence determined calorimetrically. However, the energy equivalence of materials and goods required to maintain cultural systems has not been so readily employed. Some economists (Leach 1975, Huettner 1976) have argued that energy analysis is an unnecessary exercise as economic units are the only sufficient measure for evaluating goods, materials, services, etc. However, as Chapman (1974), Gilliland (1975, 1978), and Slesser (1977) have pointed out financial costs of materials and products may not provide an adequate description of the resources needed for their production.

As discussed by Chapman (1974) there exists a wide variety of energy costing methods including statistical, input-output, and process analysis. In this study many of the energy cost determinations were arrived at from published input-output analyses. Basically the input-

output (I/O) analyses have derived, with the aid of a square matrix, the necessary energy input (e.g. BTU's) into a specific economic sector to produce a given amount of output (e.g. dollars). The specific energy costs of goods and services can thus be determined by obtaining the economic value of the item; converting the dollar value with deflators or inflators for the year of record to the year of the I/O analysis; looking up the energy per dollar conversion figure for that item; and multiplying the standard dollar value by the energy/dollar coefficient. The I/O coefficients are not without drawbacks and Herendeen and Bullard (1974) list several possible sources of error of limitations associated with the use of I/O coefficients:

(1) "I/O data is subject to inaccuracies from lack of complete coverage of an industry, restriction of information for proprietary reasons, and use of different time periods for data on different sectors."

(2) "Aggregation can combine in the same sector two processes whose energy intensities differ widely."

(3) "There is a problem associated with secondary products." For example, the dollar output might be counted twice due to transfer of the products to another sector, but the energy only once.

(4) "A problem arises in capital goods; these are not considered part of interindustry transactions but are listed as sales to final demand." Conceptually, this means, for example, that the energy to make a steel forming press owned by an auto manufacturer is not included in the energy of making the car. The error in the I/O coefficients associated with this particular problem appears to result in a 10-20% underestimation.

In retrospect, what perhaps introduces the greatest amount of error is the introduction of inflators or deflators to account for dollar changes in commodities and services brought about by inflation. This adjustment has to be done because the I/O coefficients used in this study were based on the 1967 I/O structure of the U.S. economy (Herendeen and Bullard 1974). Unfortunately different industrial sectors experienced different levels of inflation. The use of inflators or deflators was, therefore, kept to a minimum and used only when necessary.

It was decided to compare the I/O coefficients with the dollar-energy conversion figure commonly employed by the Odum "school" of energy analysts. In this situation a conversion figure of 25,000 kilocalories (of fuel equivalents – to be discussed in detail later) per dollar (1974 dollars) was used. This figure was obtained from Odum (1974b) who obtained the conversion figure by dividing the total United States' GNP into its total energy consumption plus its naturally occurring energies. Naturally occurring energy (e.g. solar radiation, tides) were included in the overall calculation because it was felt that the natural energies as well as the fossil fuel and nuclear based energy contributed to the GNP (as discussed earlier). For further discussions of the conversion process see Kylstra (1974) and Odum (1973).

Putting off the discussion of natural energies until the next section, one obvious drawback in the conversion factor is that different sectors of the economy are more or less energy dependent than others. Thus to compare a highly energy intensive chemical industry's output

to that of a less intensive one, of agricultural or forestry services, based on the general figure of 25,000 kcal FFWE, might be in error of almost ten-fold. Furthermore, the energy-dollar conversion ratio may differ significantly from region to region. Odum (1974a) used a value of 30,000 kcal/$ compared to the national average of 25,000 kcal/$, and Kylstra (1974) pointed out that these figures are still preliminary, being subject to changes and exhibit a continually decreasing ratio over the years.

Energy conversion figures derived from I/O analysis fail to include the natural energy input into the total energy cost of producing a particular good or service (Lavine and Meyburg 1976 and Kylstra 1974). However, it appears that in most cases the value obtained from the I/O analysis of Herendeen and Bullard (1974) introduces the least amount of error. Therefore, energy costing figures were obtained from the literature whenever possible and the general energy dollar conversion figure of 25,000 kcal/$ was used only for comparative purposes.

Energy Quality

As mentioned above most of the energy analysis techniques, in particular those adhering to the International Federation of Institutes of Advanced Study (IFIAS)(Roberts 1975), fail to place a value on the natural contributions in either cultural or natural systems. In fact energy analysis as practiced in accordance within the IFIAS guidelines affords little or no applicability to analysis of natural systems nor can it deal with the natural attributes of cultural systems. It is

the opinion held here and by others (Garvey 1972; Odum and Odum 1972; Woodwell 1974a,b; Odum 1975b; Odum and Odum 1976; Gilliland 1976; Shugart, et al. 1977) that energy flow analysis, when used to evaluate either natural or cultural systems, must include the work done by nature, that is, take into account the major energy flows associated with natural processes.

To place a value on these natural processes requires the employment of an energy theory of value – a theory which has been discounted by some (Slesser 1977, Georgescu-Roegen 1977). An energy theory of value is analogous to the concept of energy quality which has been developed by Odum and his coworkers at the University of Florida (Odum 1974b, 1975b; Odum and Brown 1975; Odum and Odum 1976).

The concept of energy quality is fundamental to the energy-flow modeling in this dissertation. This concept recognizes that different types of energies (i.e. sunlight, oil, materials) can accomplish varying amounts of work. When energy flows are expressed in heat units only the heat content of the flow is reflected and not the ability of the flow to perform work. As indicated by the first law of thermodynamics any energy flow can be degraded to heat with a 100% efficiency, e.g. 1000 kcal of sunlight or 1000 kcal of gasoline. However, the ability of energy flow to do work (or be harnessed) is dependent on how it is concentrated. In accordance with the second law of thermodynamics, what one need be concerned with when analyzing the quality of an energy source is not the heat content but its thermodynamic potential or free energy content. Thus energy quality is assumed to be a measure of an energy resource's potential to do work.

The basis for the differences in energy quality between different energy sources or materials, e.g. sunlight, wood, coal, is that dilute energy has been processed and concentrated into a higher quality energy. For example, electricity is a high quality energy and required a considerable energy requiring processing to concentrate the energy from coal into an electrical form. This is similar to the processing of sunlight by vegetation and the subsequent concentration of chemical energy. This process of concentrating or upgrading the quality of energy is thought to occur in systems of all levels. And in accordance with Lotka's principle, some of the higher quality energy is fed back to amplify the inflow of the lower quality energy. In Fig. 10, the process of concentrating energy in a single system or unit is shown, along with a typical hierarchical pattern of energy quality transformations.

In order to standardize the energy quality values, the term fuel equivalents (FE) is introduced. This term is similar to fossil fuel work equivalents or fossil fuel (coal) equivalents employed by Odum (1974b, 1975b). It differs in that it allows for the straightforward conversion of the values obtained from the input/output analysis of Herendeen and Bullard (1974) into kcal FE and acknowledges the contribution, although relatively small, of nuclear and hydrobased power. In actuality the term fuel equivalent refers to the quantity of energy equivalent to the average national mixture of the nation's primary fuels. 100 kcal FE is thus equal to 100 kcal of a mixture of oil, gas, and coal at their point of use. If all measurements of energy resources are expressed as fuel equivalents (this could also be done with sunlight

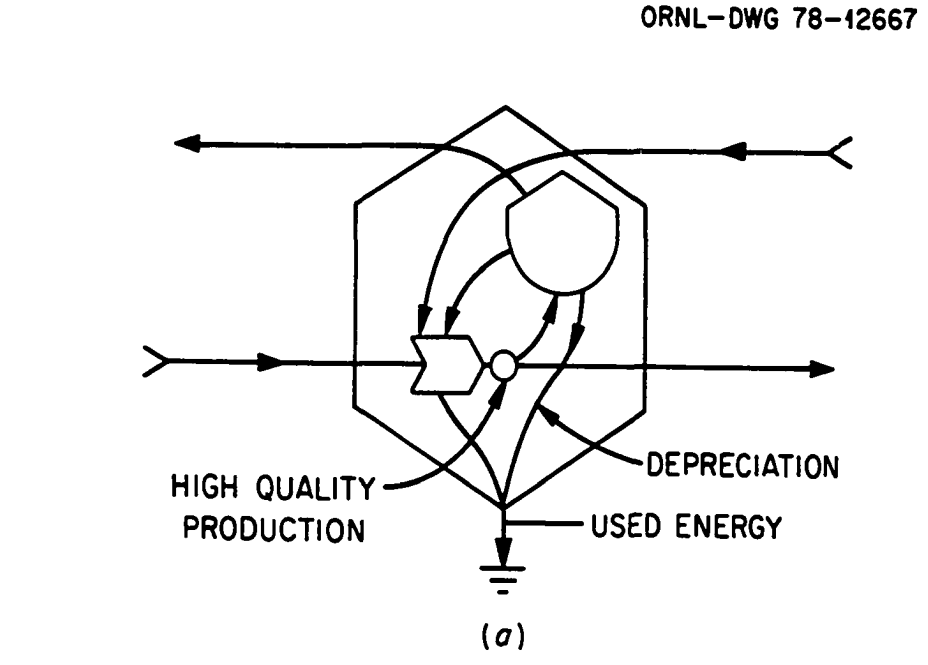

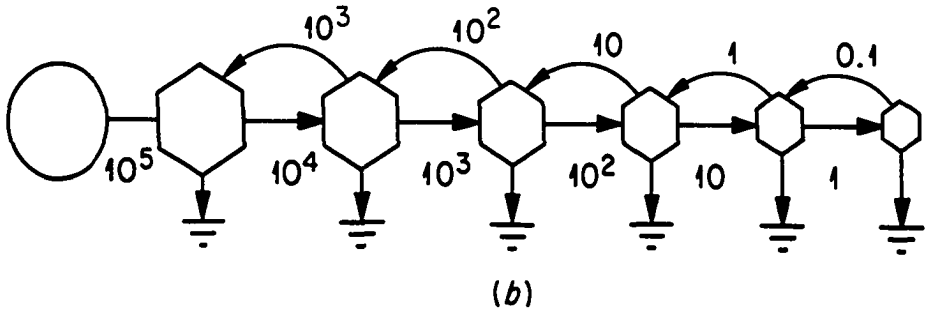

Figure 10. Hierarchy of energy quality transformations: (a) energy flows in one unit; (b) chain of units. (From Odum 1973)

equivalents), according to their energy qualities, then all the inputs and outputs of a system being evaluated can be compared on an equal basis.

A number of the principal energy quality factors used in the following pages are listed in Table 4. An example of the use of the energy quality conversion figures is as follows. Production of nitrogen fertilizer requires approximately 11,500 kcal/kg of which 10,000 comes from fossil fuel and 700 comes from electricity. However, approximately 3.89 units of fossil fuel are required to make one unit of electricity (Herendeen and Bullard 1974) and thus a total of 13,500 kcal are required to produce a kg of nitrogen fertilizer (6134 kcal FE/lb). Therefore, the farmer who applies 100 kg/ha of nitrogen to assist the planted corn to capture and concentrate the energy from sunlight (a very dilute form of energy) subsidizes the system with 1,350,000 kcal/ha in the form of nitrogen fertilizer, in addition to other fuel-based subsidies. To convert one pound of nitrogen to kilocalories FE it is only necessary to multiply pounds of nitrogen by the value ($6134 \frac{\text{kcal FE}}{\text{lb}}$) found in Table 4. In order to convert kilocalories of sunlight to fuel equivalents it is necessary to multiply by 5×10^{-4} (or 2000 kcal of sunlight = 1 kcal FE). Additional energy quality conversion factors are included in the following text.

Computer Simulations

The simulation runs of the land-use models were made on IBM 360/75 and 360/91 machines at Oak Ridge National Laboratory. A

linear system of differential equations which defined one of the models was solved by numerical integration on the computer. The computer program was coded in the Continuous System Modeling Program (CSMP)(Speckhart and Green 1976). The regression models also employed CSMP. All output was transferred to the PDP-10 computer and put on files. These files were then edited and made into graphs through the use of the PDP-10 computer and an assortment of computer programs (R. Gardner, pers. comm.).

Table 4. A list of some of the common energy quality conversion factors used in this study.

Item	Unit Quantity	Kcal Unit	Energy Quality Conversion Factor	Fuel Equivalents Unit	Source
Sunlight	Kcal	1	$5x10^{-4}$	$5x10^{-4}$	1
Gross Primary Production	Kcal	1	0.05	0.05	1
Net Primary Production	Kcal	1	$0.05 \div \frac{NPP}{GPP}$	$0.05 \div \frac{NPP}{GPP}$	2
Wood-Trees Unharvested	Kcal	1	0.5	0.5	1
Wind-5mps	meters/sec/day	320	.13	41.6	10
Water-300 meter Elevation Potential	liter	0.7	3	2.1	11
Water-(pure-sea) Chemical Potential	liter	0.0097	3	0.0291	11
Water-Biological Potential	liter	6930	.05	347	3
Fuel-ready for use					
Gasoline	gallon	31248	1	31248	4
Diesel	gallon	35280	1	35280	4
Natural Gas	ft^3	269.01	1	269.01	4

Table 4 (continued)

Item	Unit Quantity	Kcal Unit	Energy Quality Conversion Factor	Fuel Equivalents Unit	Source
LPG	gallon	23814	1	23814	4
Electricity	KWH	859.184	3.89	3342.23	5
Fertilizer*					
Nitrogen	lb.	6134	1	6134	6
Phosphorus	lb.	188	1	188	7
Potassium	lb.	188	1	188	7
Lime	ton	120000	1	120000	8
Human Labor	day	3000	5.33	16000	9
Dollars (1974)	$1	—	25000	25000	1
Insecticide Herbicide	lb.	1100	1	1100	12
Crop Seed	lb.	1900-2300	.05	95-115	13

Table 4 (continued)

Item	Unit Quantity	Kcal Unit	Energy Quality Conversion Factor	Fuel Equivalents Unit	Source
Agricultural Machinery	$1	11389	1	11389	5
Equipment Repair	$1	8181	1	8181	5
Highway Construction	$1	15670	1	15670	5
State, Local Government	$1	18464	1	18464	5
Federal Government	$1	6459	1	6459	5

Source No.

1 Odum, H. T. 1974b.

2 Net primary production is converted to fuel equivalents by accounting for work undertaken in concentrating energy of GPP to NPP.

3 Biological potential is derived in this study for Oklahoma, although it may be applicable on a wider basis. Details of calculations and rational are described in later pages of this study.

4 Caloric values come from Cervinka, et al. 1974, while quality factor comes from 1 and 5.

Table 4 (continued)

Source No.

5 Herendeen and Bullard, 1974. It takes on the average in the U.S. 3.89 units of fossil fuel to make 1 unit of electricity.

6 Nitrogen's fuel equivalent was averaged from a variety of sources including Cervinka, et al. 1974; Sweeten, et al. 1974; Pimentel, et al. 1973; Collier Corp. 1974; and White 1973. Fuel equivalents in all fertilizer values include correction factor for electricity (see above).

7 Both phosphorus and potassium values were taken from Pimentel, et al. 1973; White 1973; and Cervinka, et al. 1974. However value may be somewhat low as shown in recent data of Davis (1976).

8 Heichel 1976.

9 The average intake of food per person in the U.S. is approximately 3000 kcal/day. However, within the state of Oklahoma it was determined that an additional 13,000 kcal was expended on making those 3000 F.E. kcal available to the consumer (based on data of Shreiner and Chang 1974, and Flood, et al. 1975). Therefore a full 8 hour day of human labor was approximated at 16,000 FE kcal.

Table 4 (continued)

Source No.

10 Wind energy was approximated using $KE=1/2\ mv^2$, for a wind averaging 5 meters per second. The energy quality conversion factor was obtained from Odum and Brown (1975).

11 Odum 1970.

12 Value for herbicides and insecticides was obtained from Pimentel, et al. 1973; this may be somewhat low in view of Herendeen and Bullard's (1974) value for agricultural chemicals of 27,487 FE kcal/1974 dollar.

13 Caloric content of the seeds were obtained from the National Academy of Science (1969) and converted to fuel equivalents using the average of #2 above.

* Fertilizer itself has a very low calorie value when bombed in a bomb calorimeter. The values used here as in agricultural machinery, highway construction, etc. are the fuel equivalents required to produce a given amount of output (i.e. lbs, $).

CHAPTER IV

RESULTS

Primary Productivity Profile

Primary production of the major land-use types was calculated both in terms of mt/ha (see Klopatek and Risser 1977) of crops grown and in terms of mt/ha-total county area (Table 5). The mt/ha-total county area was obtained by dividing the total county yield by the total county area, thus solving problems with crops grown only on limited hectarage. The resulting figures represent an importance figure for a crop grown in a county. Maps of individual crop and other land-use types production can be found in Klopatek and Risser (1977).

Total Agricultural Production

The production (mt/ha) of all agricultural land-use categories was totaled in each county to produce a map of the total agricultural production (Fig. 11). A definite pattern or agricultural belt occurs within the state with the highest production occurring in the north-central border counties. In Alfalfa, Grant, Kingfisher and Noble counties, the agricultural component represents over two-thirds of the counties' total primary production. The agricultural belt follows the pattern set by small grain crops such as wheat, barley, and oats. In

Table 5. Primary production of major land-use categories in Oklahoma (mt/ha/county).

County	Hay Alfalfa	Hay Wild	Hay All Other	Cotton	Peanuts	Soybeans
Adair	.019	.025	.348	.000	.000	.005
Alfalfa	.219	.005	.313	.000	.000	.085
Atoka	.030	.026	.239	.001	.020	.001
Beaver	.069	.004	.138	.000	.000	.000
Becham	.169	.003	.207	.095	.030	.000
Blaine	.145	.002	.205	.019	.000	.000
Bryan	.102	.034	.343	.031	.078	.027
Caddo	.246	.003	.339	.096	.210	.000
Canadian	.302	.006	.349	.030	.003	.004
Carter	.038	.006	.214	.001	.005	.000
Cherokee	.012	.035	.256	.000	.000	.000
Choctaw	.053	.029	.305	.002	.007	.063
Cimarron	.035	.000	.058	.000	.000	.000
Cleveland	.171	.018	.332	.008	.000	.009
Coal	.006	.093	.280	.011	.002	.000
Commanche	.079	.040	.199	.013	.008	.000
Cotton	.201	.003	.257	.037	.000	.000
Craig	.036	.144	.321	.000	.000	.174
Creek	.088	.024	.186	.000	.004	.004
Custer	.133	.012	.179	.064	.003	.000

Table 5 (continued)

County	Hay Alfalfa	Hay Wild	Hay All Other	Cotton	Peanuts	Soybeans
Delaware	.053	.055	.366	.000	.000	.022
Dewey	.046	.003	.098	.006	.000	.000
Ellis	.036	.010	.074	.000	.000	.000
Garfield	.159	.014	.275	.000	.000	.000
Garvin	.507	.011	.546	.016	.011	.016
Grady	.476	.006	.486	.058	.019	.005
Grant	.224	.002	.275	.000	.000	.000
Greer	.184	.001	.195	.137	.003	.000
Harmon	.089	.000	.104	.238	.001	.000
Harper	.087	.009	.130	.000	.000	.000
Haskell	.048	.068	.389	.007	.000	.067
Hughes	.030	.049	.180	.001	.093	.048
Jackson	.112	.002	.156	.178	.004	.000
Jefferson	.012	.006	.079	.026	.002	.000
Johnston	.023	.019	.199	.009	.028	.007
Kay	.051	.032	.388	.000	.000	.008
Kingfisher	.129	.003	.208	.000	.000	.002
Kiowa	.117	.001	.179	.206	.001	.000
Latimer	.004	.061	.230	.000	.000	.000
Leflore	.044	.051	.431	.000	.000	.116

Table 5 (continued)

County	Hay Alfalfa	Hay Wild	Hay All Other	Cotton	Peanuts	Soybeans
Lincoln	.308	.031	.414	.001	.008	.001
Logan	.145	.023	.213	.008	.000	.000
Love	.044	.005	.192	.039	.052	.000
McLain	.485	.005	.561	.043	.010	.010
McCurtain	.022	.019	.138	.011	.001	.087
McIntosh	.020	.046	.222	.011	.009	.079
Major	.070	.005	.127	.001	.000	.000
Marshall	.029	.022	.206	.019	.457	.000
Mayes	.070	.115	.388	.000	.000	.053
Murray	.246	.008	.370	.000	.000	.000
Muskogee	.069	.009	.318	.051	.004	.170
Noble	.283	.039	.334	.000	.000	.000
Nowata	.191	.108	.376	.000	.000	.041
Okfuskee	.168	.034	.330	.002	.022	.015
Oklahoma	.265	.008	.320	.003	.002	.000
Okmulgee	.033	.010	.278	.010	.021	.036
Osage	.114	.031	.177	.001	.000	.006
Ottawa	.038	.116	.416	.000	.000	.191
Pawnee	.140	.060	.235	.011	.000	.000
Payne	.327	.031	.380	.009	.003	.000
Pittsburg	.012	.049	.166	.001	.012	.019

Table 5 (continued)

County	Hay Alfalfa	Hay Wild	Hay All Other	Cotton	Peanuts	Soybeans
Pontotoc	.149	.041	.311	.001	.008	.000
Pottawatomie	.300	.020	.415	.000	.027	.007
Pushmataha	.005	.029	.142	.000	.002	.000
Roger Mills	.121	.001	.145	.010	.000	.000
Rogers	.153	.149	.463	.000	.000	.025
Seminole	.093	.033	.246	.000	.010	.000
Sequoyah	.086	.022	.213	.005	.000	.206
Stephens	.145	.004	.198	.016	.016	.000
Texas	.010	.002	.041	.000	.000	.000
Tillman	.217	.001	.231	.171	.000	.000
Tulsa	.244	.047	.352	.000	.000	.041
Wagoner	.254	.082	.463	.022	.000	.316
Washington	.172	.067	.304	.000	.000	.029
Washita	.259	.001	.312	.278	.007	.000
Woods	.052	.001	.074	.000	.000	.000
Woodward	.059	.010	.089	.000	.000	.000

Table 5 (continued)

County	Sorghum	Silage Corn	Corn Grain	Wheat	Barley	Oats
Adair	.019	.002	.002	.006	.001	.016
Alfalfa	.085	.000	.000	3.624	.220	.032
Atoka	.023	.004	.004	.000	.000	.012
Beaver	.660	.016	.007	1.206	.014	.004
Becham	.392	.000	.000	.330	.005	.018
Blaine	.106	.000	.000	1.658	.217	.048
Bryan	.118	.015	.017	.091	.001	.073
Caddo	.525	.000	.000	.755	.062	.066
Canadian	.102	.011	.003	2.204	.377	.086
Carter	.009	.001	.003	.118	.004	.033
Cherokee	.012	.000	.001	.000	.000	.016
Choctaw	.008	.001	.006	.005	.000	.003
Cimarron	.621	.137	.052	1.434	.003	.001
Cleveland	.081	.012	.004	.065	.027	.097
Coal	.068	.001	.002	.005	.003	.033
Commanche	.041	.000	.000	.231	.024	.031
Cotton	.092	.000	.000	1.279	.203	.078
Craig	.381	.007	.029	.206	.039	.064
Creek	.023	.002	.002	.041	.003	.032
Custer	.200	.000	.000	1.494	.197	.027
Delaware	.155	.000	.000	.155	.007	.041

Table 5 (continued)

County	Sorghum	Silage Corn	Corn Grain	Wheat	Barley	Oats
Dewey	.151	.000	.000	1.086	.053	.018
Ellis	.159	.000	.000	.605	.006	.000
Garfield	.043	.000	.000	2.858	.394	.130
Garvin	.171	.025	.009	.331	.007	.061
Grady	.157	.006	.001	.705	.051	.082
Grant	.075	.000	.000	3.962	.608	.044
Greer	.133	.000	.000	.769	.008	.036
Harmon	.415	.000	.000	.811	.003	.024
Harper	.151	.000	.000	.998	.032	.009
Haskell	.012	.000	.001	.021	.001	.023
Hughes	.114	.000	.024	.043	.000	.026
Jackson	.330	.000	.000	.855	.067	.057
Jefferson	.050	.000	.000	.175	.008	.051
Johnston	.032	.006	.012	.015	.003	.085
Kay	.025	.000	.000	3.617	.689	.035
Kingfisher	.073	.000	.000	2.198	.342	.070
Kiowa	.218	.000	.000	1.134	.032	.046
Latimer	.000	.000	.000	.004	.000	.000
Leflore	.002	.000	.001	.026	.000	.011
Lincoln	.048	.002	.002	.160	.015	.070
Logan	.044	.000	.000	1.206	.236	.069

Table 5 (continued)

County	Sorghum	Silage Corn	Corn Grain	Wheat	Barley	Oats
Love	.064	.004	.016	.093	.001	.039
McClain	.064	.029	.003	.668	.037	.061
McCurtain	.005	.001	.001	.009	.000	.006
McIntosh	.158	.001	.016	.048	.002	.051
Major	.126	.000	.000	1.168	.101	.056
Marshall	.140	.000	.000	.021	.001	.070
Mayes	.167	.012	.031	.251	.026	.121
Murray	.000	.000	.002	.134	.002	.053
Muskogee	.114	.002	.009	.096	.002	.063
Noble	1.169	.000	.000	2.506	.300	.169
Nowata	.134	.000	.043	.336	.020	.073
Okfuskee	.059	.005	.002	.080	.002	.043
Oklahoma	.065	.001	.004	.548	.067	.058
Okmulgee	.116	.002	.021	.034	.002	.049
Osage	.024	.000	.005	.146	.018	.014
Ottawa	.550	.004	.032	.825	.025	.079
Pawnee	.049	.001	.003	.406	.076	.029
Payne	.063	.000	.004	.567	.087	.020
Pittsburg	.048	.001	.001	.031	.000	.023
Pontotoc	.050	.004	.002	.007	.003	.044
Pottawatomie	.106	.001	.004	.230	.005	.039

Table 5 (continued)

County	Sorghum	Silage Corn	Corn Grain	Wheat	Barley	Oats
Pushmataha	.000	.000	.001	.000	.000	.001
Roger Mills	.236	.000	.000	.373	.012	.005
Rogers	.062	.001	.006	.133	.012	.046
Seminole	.022	.000	.000	.050	.001	.014
Sequoyah	.000	.000	.000	.051	.000	.027
Stephens	.088	.005	.003	.313	.011	.063
Texas	1.252	.169	.123	1.941	.018	.001
Tillman	.165	.000	.000	1.287	.197	.077
Tulsa	.100	.002	.016	.108	.007	.031
Wagoner	.226	.000	.020	.620	.013	.052
Washington	.105	.002	.005	.195	.024	.048
Washita	.582	.000	.000	1.476	.094	.078
Woods	.131	.000	.000	1.582	.077	.014
Woodward	.213	.000	.000	.853	.047	.008

Table 5 (continued)

County	Orchard Vine/Bush	Rangeland Grazed (Pasture)	Rangeland Ungrazed	Water Large	Water Small ($x10^{-3}$)	Urban
Adair	.017	1.278	.226	.001	.385	.046
Alfalfa	.000	.084	1.341	.079	.305	.068
Atoka	.009	1.822	.524	.006	.228	.035
Beaver	.000	.000	1.472	.000	.367	.041
Becham	.000	.168	2.771	.001	.756	.056
Blaine	.000	.127	2.078	.000	.318	.064
Bryan	.053	2.184	.733	.359	.213	.048
Caddo	.017	.489	1.618	.039	.117	.057
Canadian	.000	.268	1.724	.020	.497	.092
Carter	.038	1.070	1.816	.005	.270	.111
Cherokee	.007	1.860	.150	.131	.319	.057
Chocktaw	.003	3.258	.592	.009	.056	.050
Cimarron	.000	.000	1.560	.001	.076	.027
Cleveland	.017	1.127	1.867	.142	.481	.147
Coal	.010	1.836	1.465	.006	.349	.042
Commanche	.000	.262	2.180	.063	.310	.122
Cotton	.009	.189	2.199	.003	.381	.068
Craig	.000	1.684	2.420	.000	.050	.081
Creek	.017	1.146	1.622	.055	.131	.080
Custer	.000	.059	2.554	.005	.468	.077

Table 5 (continued)

County	Orchard Vine/Bush	Rangeland Grazed (Pasture)	Rangeland Ungrazed	Water Large	Water Small ($x10^{-3}$)	Urban
Delaware	.002	1.159	.700	.002	.098	.045
Dewey	.000	.044	2.543	.004	.012	.043
Ellis	.000	.000	1.872	.001	.061	.046
Garfield	.000	.058	1.304	.000	.302	.111
Garvin	.042	1.031	2.415	.006	.491	.078
Grady	.000	.403	2.422	.007	.394	.059
Grant	.000	.044	1.078	.001	.435	.062
Greer	.000	.262	2.005	.001	.177	.048
Harmon	.000	.136	2.073	.002	.304	.049
Harper	.000	.067	1.746	.000	.244	.043
Haskell	.005	3.681	.318	.003	.192	.043
Hughes	.009	1.266	1.571	.011	.197	.051
Jackson	.005	.053	1.252	.002	1.316	.073
Jefferson	.006	.342	4.009	.001	.207	.040
Johnston	.074	1.275	2.569	.002	.198	.044
Kay	.000	.052	1.632	.010	.371	.111
Kingfisher	.000	.400	1.510	.002	.161	.058
Kiowa	.000	.083	1.669	.054	.477	.064
Latimer	.000	1.211	.355	.004	.108	.049
Leflore	.002	1.128	.390	.004	.114	.044

Table 5 (continued)

County	Orchard Vine/Bush	Rangeland Grazed (Pasture)	Rangeland Ungrazed	Water Large	Water Small ($x10^{-3}$)	Urban
Lincoln	.016	.897	2.490	.007	.336	.070
Logan	.003	.627	1.744	.005	.444	.079
Love	.095	.856	.995	.093	.092	.047
McClain	.010	1.293	2.351	.005	.279	.085
McCurtain	.004	1.174	.132	.066	.204	.035
McIntosh	.019	2.140	.934	.765	.154	.062
Major	.004	.362	2.092	.000	.095	.045
Marshall	.019	1.482	1.666	1.112	.116	.045
Mayes	.008	2.395	.915	.019	.183	.069
Murray	.023	1.140	2.971	.001	.688	.057
Muskogee	.005	2.336	1.005	.117	.117	.123
Noble	.005	.315	2.378	.004	.182	.064
Nowata	.000	1.019	2.843	.002	.417	.060
Okfuskee	.232	1.350	2.261	.012	.817	.052
Oklahoma	.020	.431	1.300	.034	.131	.501
Okmulgee	.158	1.622	1.450	.016	.291	.085
Osage	.000	.431	2.714	.053	1.121	.045
Ottawa	.000	1.916	.491	.789	.064	.128
Pawnee	.003	.527	2.539	.129	.668	.060
Payne	.009	.645	2.706	.046	.154	.088

Table 5 (continued)

County	Orchard Vine/Bush	Rangeland Grazed (Pasture)	Rangeland Ungrazed	Water Large	Water Small ($x10^{-3}$)	Urban
Pittsburg	.000	.985	1.317	.286	.105	.072
Pontotoc	.002	1.283	2.912	.002	.132	.074
Pottawatomie	.039	1.469	2.264	.027	.415	.084
Pushmataha	.000	.892	.249	.002	.125	.019
Roger Mills	.004	.119	3.478	.008	.249	.053
Rogers	.100	1.715	2.175	.009	.249	.117
Seminole	.006	1.584	1.753	.028	.307	.075
Sequoyah	.003	1.706	.879	.003	.030	.063
Stephens	.000	.952	1.509	.034	.077	.124
Texas	.000	.000	2.092	.000	.159	.047
Tillman	.003	.175	.581	.001	.295	.058
Tulsa	.025	2.235	.648	.057	.332	.424
Wagoner	.009	1.600	1.063	.266	.119	.068
Washington	.012	1.029	2.868	.005	.446	.130
Washita	.003	.403	1.492	.012	.367	.066
Woods	.000	.000	3.362	.000	.264	.052
Woodward	.000	.015	3.346	.010	.157	.048

Table 5 (continued)

County	Open Land	Right of Way	Forest	Agricultural Total	Total
Adair	.095	.144	6.96	.460	9.211
Alfalfa	.000	.169	.15	4.570	6.161
Atoka	.046	.096	6.22	.369	9.113
Beaver	.000	.127	.03	2.118	3.788
Becham	.092	.154	.03	1.249	4.522
Blaine	.000	.158	.38	2.400	5.407
Bryan	.055	.130	3.05	.983	7.543
Caddo	.009	.122	.98	2.319	5.603
Canadian	.000	.177	.52	3.477	6.775
Carter	.025	.141	2.87	.470	6.508
Cherokee	.026	.145	6.66	.339	9.368
Choctaw	.057	.121	5.07	.485	9.642
Cimarron	.003	.098	.40	2.341	4.430
Cleveland	.000	.172	2.08	.841	6.376
Coal	.003	.105	4.21	.576	8.243
Commanche	.094	.133	.37	.666	4.200
Cotton	.031	.170	.27	2.159	6.086
Craig	.048	.148	.56	1.401	6.460
Creek	.214	.127	2.23	.426	5.900
Custer	.000	.164	.04	2.309	5.208

Table 5 (continued)

County	Open Land	Right of Way	Forest	Agricultural Total	Total
Delaware	.176	.177	6.05	.862	9.166
Dewey	.000	.128	.06	1.461	4.283
Ellis	.000	.117	.05	.890	3.210
Garfield	.000	.196	.14	3.873	5.682
Garvin	.187	.146	1.15	1.753	6.776
Grady	.115	.113	.73	2.052	5.901
Grant	.000	.187	.06	5.190	6.622
Greer	.000	.148	.09	1.466	4.020
Harmon	.026	.152	.03	1.685	4.153
Harper	.000	.113	.01	1.416	3.396
Haskell	.025	.129	3.81	.642	8.651
Hughes	.000	.132	4.12	.617	7.768
Jackson	.000	.171	.07	1.766	3.388
Jefferson	.043	.108	.35	.415	6.257
Johnston	.018	.106	2.35	.512	6.876
Kay	.008	.173	.26	4.845	7.091
Kingfisher	.000	.192	.40	3.027	5.589
Kiowa	.000	.055	.03	1.934	3.843
Latimer	.005	.226	8.07	.299	10.219
Leflore	.148	.105	4.92	.684	7.423

Table 5 (continued)

County	Open Land	Right of Way	Forest	Agricultural Total	Total
Lincoln	.030	.169	2.05	1.076	6.789
Logan	.047	.170	1.60	1.947	6.219
Love	.713	.114	2.40	.644	5.862
McClain	.031	.147	.56	1.986	6.458
McCurtain	.024	.086	7.34	.304	9.161
McIntosh	.013	.138	3.30	.682	7.983
Major	.004	.144	.69	1.658	5.005
Marshall	.595	.137	1.13	.984	7.109
Mayes	.033	.168	2.91	1.242	7.751
Murray	.000	.095	1.16	.838	6.233
Muskogee	.031	.171	1.16	.912	5.246
Noble	.014	.172	.52	4.805	8.272
Nowata	.004	.143	.66	1.322	5.152
Okfuskee	.053	.136	2.21	.994	7.069
Oklahoma	.003	.215	1.88	1.368	5.732
Okmulgee	.203	.154	2.81	.861	7.152
Osage	.023	.084	.81	.536	4.679
Ottawa	.004	.187	2.90	2.276	8.691
Pawnee	.078	.157	1.61	1.013	6.113
Payne	.000	.181	1.53	1.500	6.696

Table 5 (continued)

County	Open Land	Right of Way	Forest	Agricultural Total	Total
Pittsburg	.002	.101	4.83	.363	7.956
Pontotoc	.000	.131	1.55	.622	6.574
Pottawatomie	.012	.158	1.55	1.193	6.752
Pushmataha	.092	.069	8.74	.180	10.243
Roger Mills	.017	.120	.05	.907	5.177
Rogers	.105	.155	.83	1.150	6.226
Seminole	.011	.175	2.76	.475	6.870
Sequoyah	.008	.149	5.55	.613	8.971
Stephens	.000	.150	2.63	.862	6.261
Texas	.000	.141	.01	3.557	5.847
Tillman	.000	.177	.03	2.349	3.371
Tulsa	.000	.217	1.03	.973	5.923
Wagoner	.003	.164	1.34	2.077	6.581
Washington	.060	.141	.75	.963	5.946
Washita	.000	.177	.00	3.090	6.240
Woods	.000	.124	.10	1.931	5.569
Woodward	.003	.130	.21	1.279	5.278



Figure 11. Total agricultural production (mt/ha) per county area.

the Panhandle most production comes from wheat, sorghum, and corn. High values relative to the entire state also occur in the Panhandle. Lowest values, accounting for less than 3-5% of the total county production, occur in southeastern Oklahoma, indicating the small contribution of agriculture in these counties.

As in the case of the individual crops, the CORSYMAP program was used to correlate the total agricultural production pattern with the various climatic, edaphic and subsidization factors.

The most obvious correlation that was found is that with soil types. The agricultural belt predominates in the central Reddish Prairie region which is composed primarily of silt loam and clay loam soils well-suited for the cultivation of small grains. The region's level to moderately rolling terrain makes it well-suited for large scale cultivation. Within the northcentral region of the agricultural belt appears the highest correlation between the relative potential soil productivity and agricultural production (Fig. 12). The total state, however, only shows a 0.115 correlation coefficient (Table 6). This may be attributed to a number of factors. Some counties such as those in the Panhandle possess (for the most part) fair to poor soils as rated by the soil productivity ratings. However, these counties have substantial land with soils suited for crops under extensive irrigation and fertilization. With only naturally occurring precipitation, the soils themselves are not very productive. Given adequate subsidization these soils are productive, although the subsidization must be maintained as is evidenced by the Dust Bowl period in the Thirties when substantial irrigation water was unavailable.



Linear correlation coefficient is 0.115.

Figure 12. Correlation between 1971 agricultural net primary production per county and relative potential soil productivity.

Table 6. Linear correlation coefficients between total state primary productivity and agricultural productivity and various environmental and subsidization factors. Correlation coefficients determined with the use of the CORSYMAP Program.

	Agricultural Primary Productivity	Total Primary Productivity
Annual Precipitation	-.540	.780
May-August Precipitation	-.402	.714
Average Annual Temperature	-.403	.383
Potential Evapotranspiration	-.330	.274
July Evapo-transpiration	.136	-.338
Growing Season	-.401	.313
Soil Productivity	.115	.302
Water Balance	-.489	.784
Irrigation	.384	-.356
Fertilizer Input	.734	-.057

Another reason for low correlation is the existence of the highly rated soils east of the agricultural belt (Fig. 6) which show a low total agricultural production. Many of the soils in this section of the state are capable of being tilled (Gray and Galloway 1969) but are used primarily as grazed and ungrazed rangeland. Most production efforts in the area are aimed at secondary production – beef cattle. As a result, much of the land has never been subject to cultivation though it has the capability of producing substantial yields.

Some counties such as Cotton, Custer, and Caddo have low to medium soil ratings but significant agricultural production obtained from limited amount of land under irrigation resulting in a low correlation with potential soil productivity.

Surveying the correlations with the climatic parameters (Table 3), it is at first surprising to view all the negative correlations (except July evapotranspiration). However, since most of Oklahoma's agricultural production comes from small grains this is not unexpected. The small grain crops, especially winter wheat, do best in an area which experiences colder winter temperatures (as is exemplified by their distribution through Kansas and northward). Thus, no positive correlation exists with the warmer annual temperatures in southern Oklahoma. Furthermore most areas in the state, with the possible exception of the extreme western portion of the Panhandle, possess more than adequate growing seasons for most of the major agricultural crops.

Moisture and soil fertility are perhaps the most severely limiting factors in Oklahoma's agricultural production. Though yields of some of the major crops such as wheat are closely aligned to moisture status, the total agricultural production to annual precipitation correlation is -0.540. This is because: 1) most of the small grain crops are dependent on precipitation and adequate moisture in the first half of the year, the period when most of their growth and development occurs; 2) certain areas in Oklahoma (specifically the Panhandle) rely almost entirely on irrigation for maintenance of their agricultural production; 3) the eastern section of the state which receives the greatest average annual precipitation has relatively little land available for cultivation due to limitations imposed by the terrain.

The addition of evapotranspiration and irrigation to precipitation still results in a negative correlation (Table 3). Irrigation and agricultural production result in a positive correlation of only 0.384. Though correlation is high in the Panhandle and some southwestern counties (high production-high irrigation) and in the southeast (low production-low irrigation), the high production and low to moderate irrigation in the agricultural belt greatly reduced the value of the correlation coefficient.

Fertilizer application shows the best correlation (0.734) with agricultural production and emphasized the subsidization involved in the support of the agroecosystems.

Overall productive agricultural ecosystems found within Oklahoma can be seen as occupying a relatively small section of the

state (less than 25 percent) (Fig. 13). Most large scale agriculture practiced outside of the agricultural belt to the west and south is limited by moisture and must receive a substantial subsidization in the form of irrigation. The potential productivity of these areas is dictated by soil capability. Only one area in which the potential soil productivity and precipitation appear to be nonlimiting has relatively low agricultural production (Fig. 11) (Osage, Nowata, Washington counties).

Considering annual net primary production as the annual accrual of organic matter, the introduced agricultural ecosystems are more productive than the natural ones they replace. On the other hand, examination of the solar energy captured by both natural and subsidized vegetation taking into account that involved in its production cost (solar radiation, fossil fuels, fertilizers, etc.) suggests that this may not be the situation and further examination is the basis for future research.

Total Primary Production

The pattern of total annual net primary production (Fig. 14) in Oklahoma correlates with precipitation with a significant gradient increasing from west to east. The correlation coefficients were 0.780 for annual precipitation, 0.714 for summer precipitation and 0.784 for water balance. The correlations are especially important in comparison to those obtained with agricultural production. Total primary production showed a positive correlation with all the examined environmental variables (except July evapotranspiration). This is indicative of the



Figure 13. Percentage of total county primary production derived from agriculture (1971).

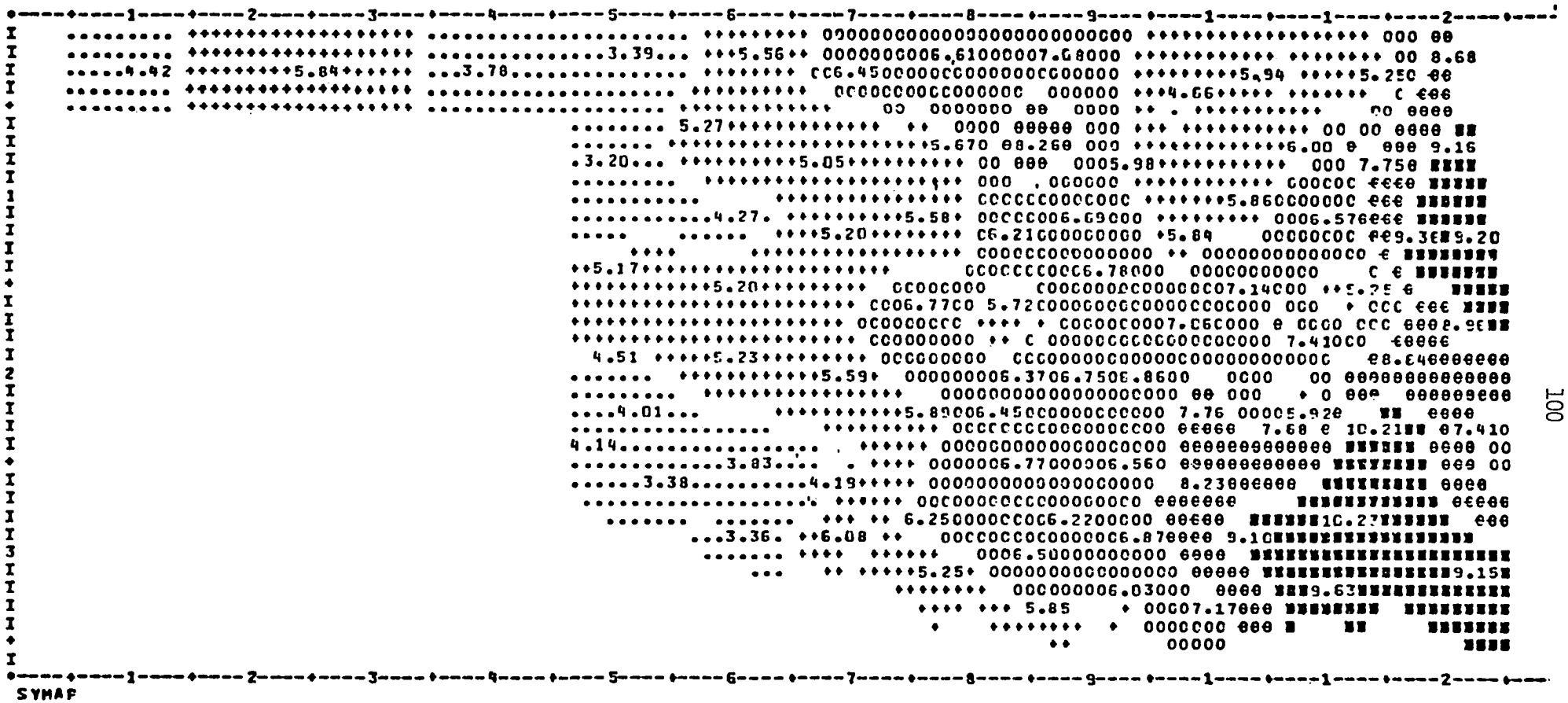

Figure 14. Total Oklahoma production (mt/ha) per county area.

maximization of natural energies (long growing seasons, abundant radiation, mild winter temperatures and adequate year-round precipitation) by the naturally occurring ecosystems. The natural ecosystems have utilized their available resources to evolve structural and biochemical diversity to combat disease and predation; internal or closed nutrient cycles to insure the availability of necessary minerals; specialized ontogenies to maximize resources as they are available; and other physiological and morphological adaptations to increase stability and longevity (Whittaker and Woodwell 1972). The agro-ecosystems on the other hand can be likened to early successional systems with vegetation which has been selected and bred for high yields. With most of the plants' energies being directed into net production, substantial energy must be expended by external sources to provide nutrients, water and pest protection. Additional energies must also be expended in maintaining these successional stages or to combat normal ecosystem development processes. This is the primary reason for the discrepancies of the correlation coefficients between the natural and agroecosystems and their environmental parameters.

The correlation between total primary production and potential soil productivity is almost three times that found with total agricultural productivity, but is still relatively low. The major regions demonstrating high primary production occur in the Ouachita and Ozark highlands, representing oak-pine and oak-hickory forests, respectively. These areas possess poor, rocky soils which occur in rough terrain, much of which are incapable of being cultivated or, if cultivated, are subject to serious erosion. The climax forest ecosystems, however, have

adapted to the favorable climatic conditions and have developed their own internal nutrient cycles to combat the effects of poor soils and rough terrain.

Statewide Pattern

A number of observations can be seen with the comparison of agricultural and total primary productivity. Immediately it can be seen that the two areas do not coincide. Similar to Tennessee (DeSelm 1971) forested areas possessed a higher productivity than did agricultural areas and, similar to Wisconsin (Cottam, et al. 1973), intensive agriculture resulted in a higher net primary production than did the surrounding naturally occurring vegetational communities. Areas within the state which possess ecosystems with low net productivities if converted to agricultural ecosystems require significant inputs of water, nutrients and fossil fuel-based maintenance in order to be successful.

With the exception of the large section of mid-range productivities in the north-northeast section of the state, the primary production shows a clear decreasing gradient from east to west. That exception, however, may depict the inherent natural productivity of the area as much of the land is in pasture, ungrazed rangeland, or wild hay. Most of the vegetation is naturally occurring and for the most part unsubsidized. In the region immediately to its west, agricultural enterprises comprise the majority of the land use and the total primary production reflects the results of fossil fuel-based subsidization.

Lowest total primary production occurs in the hot, dry southwestern and cold, dry northwestern and Panhandle sections of the state.

In these regions agricultural production comprises one-fourth to almost two-thirds of the counties' total primary production.

The Oklahoma primary productivity profile most closely corresponds with a single major environmental variable – precipitation – than any of the other primary productivity studies undertaken. This pattern closely follows that estimated by Lieth and Box (1972) based on precipitation/evaporation ratios although their values seem to be an overestimate because the state pattern of primary production essentially follows the precipitation-net production described by Whittaker (1975) with some modifications due to temperature influences. Thus, Oklahoma can be thought of both as a state with a vegetational transition from deciduous forests in the east to short-grass prairie in the west, and an accompanying decreasing gradient of primary production. The counties with the highest productivities in the southeast and east (10.2 mt/ha/yr) were three times that of the low values in the northwest and southwest (3.20-3.40 mt/ha/yr) and are indicative of the vegetational diversity occurring across Oklahoma.

The compilation of the productivity profile of Oklahoma has been only an initial step in the evaluation of primary production and land-use patterns across the state. However, the productivity profile now affords a reference point on which to base needed future evaluations as well as providing valuable perspective into land use and primary production within Oklahoma. Oklahoma possesses widespread diversity in climate, soils, and vegetation types. The ramifications of this diversity have been made more evident within the productivity profile. Primary productivity varies three-fold across the state with

almost 90% of some counties' production coming from natural ecosystems (i.e. forests, rangeland, openland, etc.) while other counties have almost 100% of their primary production stemming from man-managed ecosystems [agriculture (Fig. 13), urban land, pasture, pine plantation, etc.].

This latter point presents a number of interesting questions. One concerns the validity or usefulness of the potential natural vegetation map as composed by Duck and Fletcher (1943). While the map is useful in that it presents the past vegetational types covering Oklahoma, it does not give any insight into what vegetation types, be they natural or introduced, exist at the present time. Thus, there is no current map which can be used to base land use or management decisions. Furthermore, the rapid and widescale succession from natural ecosystems to man-managed or subsidized systems indicate the necessity of preserving "natural areas" across the state for scientific, esthetic and educational purposes. The necessity of and reasons for preserving these natural areas are more amply described by Romancier (1974) and Lindsey (1968).

One of the key questions brought about by the accelerated changes in our land usage is that concerning land-use planning and the optimization of land potential. It is in this situation that primary productivity of the various ecosystems within the region can be used in formulating a land-use optimization strategy.

Oklahoma County is a good example of the effects of urbanization on primary productivity. Its total primary production is

significantly lower than those surrounding counties which possess similar edaphic and climatic conditions.

Careful consideration should precede the irretrievable commitment of those regions possessing soil suited for agriculture, along with favorable climatic factors, to any other land-use type. Specifically this means that conflicts between agricultural potential and urban development, including housing, industrial parks, power plant sitings, etc. should be avoided. It also means that the paving over of agricultural land for highways or exclusion transmission line right-of-ways should be minimized and alternate routings should be sought. On the other hand, this does not mean that all land suitable for agriculture should be under cultivation. On the contrary, sound ecological principles dictate that scattered tracts of natural vegetation should be retained throughout the agricultural region. These tracts of natural vegetation offer a source of ecological stability to the landscape, a source of predators on insect pests, soil stabilization, and microclimate attenuation. This is especially important in this era of vast monocultures practiced by the farming community. After market and transportation considerations, the decisions concerning what individual crop is to be grown within an area appear to be a simple matter of growing that crop where it does the best. However, as discussed in the section on agricultural productivity, high-yielding areas may be of limited size or abundance while those areas capable of producing moderate yields of a variety of crops may be more prevalent. It was also shown that many crops had the highest yields in areas that would normally be incapable of sustaining minimal production of the crops

without large-scale inputs, primarily of irrigation and fertilization. The question then arises as to the soundness of putting marginal land into intensive agriculture through the use of massive subsidies derived primarily from fossil fuel while other land is still available for cultivation with significantly less subsidization required. Although we are not ready at this point to give a categorical answer, many of these decisions will have to be made in the future, based on long-term energetics; as of now many of the decisions are based on short-term economics.

Agricultural land is by no means the sole land-use type which should have priority status. Rangeland and forests should also be given a special position. Rangelands in Oklahoma are primarily short-grass and mixed grass prairie ecosystems with a few substantial areas of tall-grass prairie. These ecosystems have evolved over time into climax ecosystems which represent the most stable, productive, steady-state systems possible based on the natural energies available to them. Although the primary productivity of the rangelands is not directly available to man it is a vital contributor to secondary production of meat which has become a major source of protein, vitamins and other diversified biochemical compounds essential to the diet of man. Simply preserving the rangelands however is not sufficient; long-term management is also necessary as indicated by past histories of overgrazing and the Dust Bowl era of the Thirties brought about by their misuse.

Eastern forest lands in Oklahoma have been shown to be the most productive of the major ecosystems within the state's boundaries. On this fact alone an argument can be developed for the maintenance of

our forest lands. However, there are a host of other reasons justifying this. The forests in Oklahoma offer a major resource and one that is renewable under proper management. These forests have evolved in much the same way as the grasslands to be the most stable form of cover for that region, essential in hydrologic recharge, nutrient retention, and erosion prevention. There has been the recently expanding timber industry within Oklahoma, particularly in the southeastern section. Present timber management practices in Oklahoma are similar to those of agriculture. These include the clear-cutting of existing vegetation and replanting with a monoculture requiring continuous management. Although the pros and cons of these methods are vociferously debated, they are economically the most feasible to the timber industry at the present time. On a short-term basis, fossil fuels and their products are used to provide the maintenance, disease protection, nutrient retention and stability mechanisms naturally provided in the forest ecosystem. In the long run it may be possible that the free work-lower annual yields may be cheaper than the heavily subsidized higher yields of today.

From the above it should not be recommended that only land offering "harvestable" products should be considered for special land-use zoning. On the contrary, a number of areas exist which although not displaying above average or average primary productivity are important to preserve. These include areas possessing a high potential for recreational usage, sites providing habitats for rare or endangered species, and open spaces in general which have been shown to be so important to the human animal. Also important are many

other areas which provide sites of hydrologic recharge, noise and air pollution attenuation, flood water retention and esthetic enjoyment.

All types of land represent a resource which can have disparate values to a variety of individuals. However, the future strategies for the evaluation of Oklahoma's land – whether it be for agriculture, transportation right-of-ways, housing developments, recreation or timber – should be done on the basis of land-use optimization. That optimization should be long-term, ecologically sound, and energetically feasible.

Natural Energy Contributions

Before beginning the discussion on the energetics of the land-use systems it is appropriate to discuss the naturally occurring energy available to all of the systems in question. For purposes of simplification only the energy contribution from two natural sources will be discussed – solar radiation and precipitation. This is not to say wind is not an energy source. It is indeed, as the average daily wind speed for Texas, Cleveland and McCurtain Counties is 14.4, 20.9 and 10.2 km/hr, respectively. This translates into 33.8, 71.1, 16.9 x 10^9 kcal FE/ha/yr. However, it was felt that the evaluation of the energy contribution of wind was beyond the scope of this study.

Solar Radiation

The average annual solar radiation received by Texas, Cleveland and McCurtain Counties is 16.4 x 10^9 kcal/ha, 15.3 x 10^9 kcal/ha and 14.6 x 10^9 kcal/ha, respectively (Baldwin 1973). To convert solar radiation to kilocalories of fuel equivalents it is necessary to divide

by 2000 (Table 4). Thus the energy contribution of sunlight in fuel equivalents is 8210, 7665, and 7300 x 10^3 kcal/ha/yr, respectively. Total solar radiation was used as a measure of solar energy flow into the system. It is a common practice of equating the solar energy input into ecosystems as the photosynthetically active radiation during the growing season (PAGS). However, in this study PAGS was not a useful parameter. For example, if PAGS is utilized as a measure of solar energy input, how is the radiation accounted for which maintains winter wheat photosynthesis occurring outside the typical last frost-first frost growing season. Thus the comparison of primary producers which photosynthesize considerable amounts during the 'non-growing season' would be impossible, i.e. conifers, phytoplankton, etc. And finally, PAGS does not account for that solar energy accomplishing other work – warming the soil, driving evapotranspiration.

Precipitation

Odum (1970) calculated the energy value of water as weight, chemical reactant, and as a photosynthetic requirement. It was felt in this study that a photosynthetic requirement was the primary energy contribution of water to the land-use systems because it is the predominant limiting factor in the region. This is shown in Fig. 15, where precipitation interacts with the main energy source (solar) within the interaction symbol which flows into the primary producer component of the ecosystem. It follows that the amplification power of the precipitation should be the measure of its energy contribution to the system. Odum (1970) used the contribution of water to primary production in desert agriculture as its energy value. In this study it

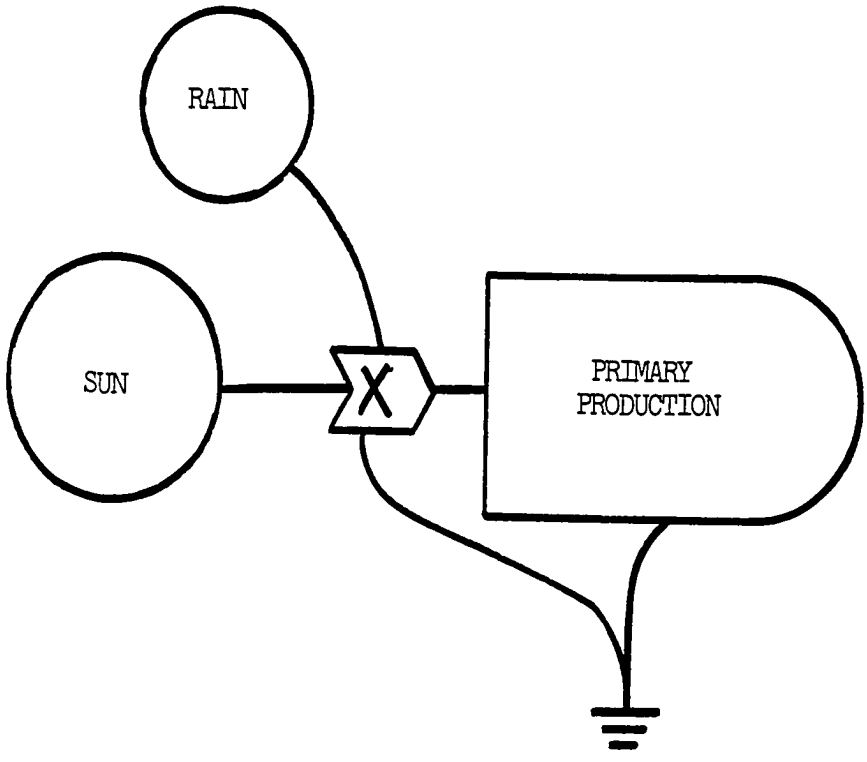

Figure 15. Simplified diagram showing interaction between sun and rain and the controlling action precipitation plays.

was felt that it would be better to measure water's energy contribution to Oklahoma ecosystems. For this purpose rangeland, an ecosystem common to all three counties, was utilized as an evaluator of the contribution of precipitation.

The details on the primary production aspects of rangeland in the three counties is discussed later in the section on grazing systems. Table 7 gives a description of how the annual average precipitation values were converted to energy values based on the NPP and GPP data for all three counties. Basically the process consisted of five steps: 1) The determination of how much precipitation fell per unit area (m^2) per county per year (U.S. Dept. Commerce 1973). 2) The annual NPP and GPP for rangeland in all three counties was determined. 3) NPP and GPP biomass values were converted into caloric equivalents. 4) The NPP and GPP values were divided by the precipitation values to obtain a calorie/gram of water factor. 5) This factor was then converted to kilocalories of fuel equivalents (using the conversion factors listed in Table 4) for the county per hectare per year. The energy contribution from precipitation for Texas, Cleveland and McCurtain Counties is 1568, 2945, and 4395 x 10^3 kcal FE/ha, respectively. However, these values were not used as energy inputs for comparative purposes, as only the direct solar contribution was employed. It should be noted that the average NPP-cal/g H_2O was 2.78, a value very close to that obtained for northern Great Plains rangelands of 3.05 cal/g H_2O from data of Olson, et al. (1970). Thus, the average value obtained was felt to be satisfactory.

If the conversion figure of 25,000 kcal/$ is used the value of annual average precipitation for Texas, Cleveland and McCurtain Counties becomes $62.72/ha, $117.80/ha, and $175.80/ha, respectively.

Table 7. The value of water in Oklahoma based on primary production.

	Texas	Cleveland	McCurtain
Precipitation-cm^3/m^2	456,438	875,284	1,222,502
NPP-cal/m^2	119,280	235,620	372,540
NPP-cal/cm^3 H_2O	2.61	2.69	3.04
GPP-cal/cm^3 H_2O	6.87	6.73	7.19
Kcal FE/m^2	156.8	294.5	439.5
10^3 kcal FE/ha	1568	2945	4395

Average Energy Value of H_2O = .347 kcal FE/liter.

= 1.35 kcal FE/gallon.

25,000 kcal FE/$ - 1 acre-foot of water is worth $17.60.

(Therefore, to irrigate 1 ha with 1 cm of H_2O in Texas County requires 7188 x 10^3 kcal FE or 4.58 times its natural value.)

In other terms this comes to 1.35 kcal FE or $\$5.38 \times 10^{-5}$/gal. This transfers to \$17.60 an acre-foot of water (1 acre foot = 325,851 gal.). To irrigate 1 m^2 to a depth of 1 cm requires 15.74 kcal FE in Texas County, or to equal the natural precipitation in the county requires 7188×10^3 kcal FE/ha. Thus, compared to the natural contribution of precipitation (1568×10^3 kcal FE/ha), irrigation costs are 4 1/2 times the natural value.

Agricultural Systems Energetics

In this section the results of analyzing the agricultural systems in Texas, Cleveland and McCurtain Counties are presented. Agroecosystem models are employed to organize the energy inputs and outputs, as well as to conceptualize the system of interest. Inputs include the natural energies, previously discussed, and those energies based on the consumption of fossil fuels. Output energies are expressed in several forms, including net primary production, gross primary production, harvested yield and others. Finally, a number of ratios which relate various kinds of inputs to each other as well as inputs to outputs are discussed in terms of efficiency. The ratios in the three counties are compared.

Agroecosystem Models

Detailed models were constructed for the agricultural systems in each of the three counties. The purpose of these models was to insure that all major compartments, causal forces and energy flows were accounted for. As discussed previously, Fig. 7 illustrates a typical qualitative model for the Texas County agroecosystem. Actual values

were obtained for all the compartments and flows and converted to fuel equivalents for Texas, as well as Cleveland and McCurtain Counties. These values could then be applied to Fig. 8 to make a quantitative model. However, as previously discussed the size and resolution of such a model proves unwieldly. Therefore all calculations were combined and averaged to produce a macroscopic mini-model of the agroecosystem in each county. The resultant models are shown in Figs. 16, 17, and 18.

These simplified models allow one to obtain an immediate overview of the system. Using Texas County (Fig. 16) as an example, we can see that the basic source of all energy for the system, as for all primary production based systems, is the sun. In fuel equivalents it is 2 1/2 to 3 times larger than the sum of fuel-based energies into the system in all cases. As the sun's energy flows into the system, only about 48 percent of it is available to be converted from light to chemical energy through photosynthesis (thus the outflow arrow coming out of the sensor). This energy flows into the interaction symbol, but again much of it (all in some instances) cannot be converted to primary production without the amplification power obtained from the energy flows entering the interaction symbol from above. For example, without the natural occurring precipitation source the natural systems are unable to utilize the available solar energy. Within the agroecosystem an input of fuel-based energies or cultural energy as termed by Heichel (1973, 1974) is required for the existence of the system. It is because of these inputs of seed (S), herbicides and insecticides (HI), fossil fuel (FF), fertilizer (F), machinery (M) and in some cases

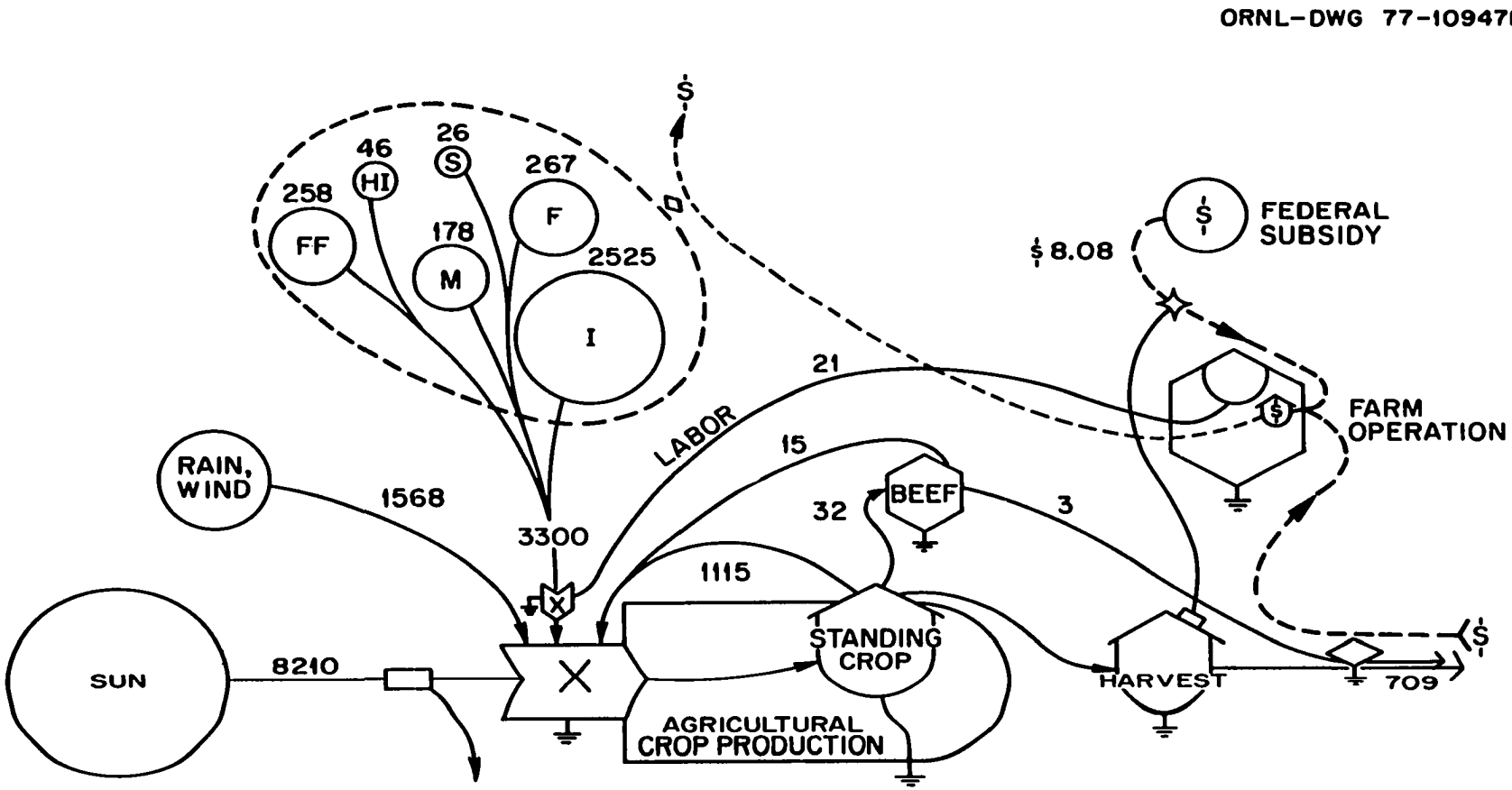

Figure 16. Energy model of agriculture in Texas County, Oklahoma. FF — fossil fuel; M — machinery; F — fertilizer; I — irrigation; HI — herbicides and insecticides; S — seeds. Units are 10^3 kcal fuel equivalents/hectare.

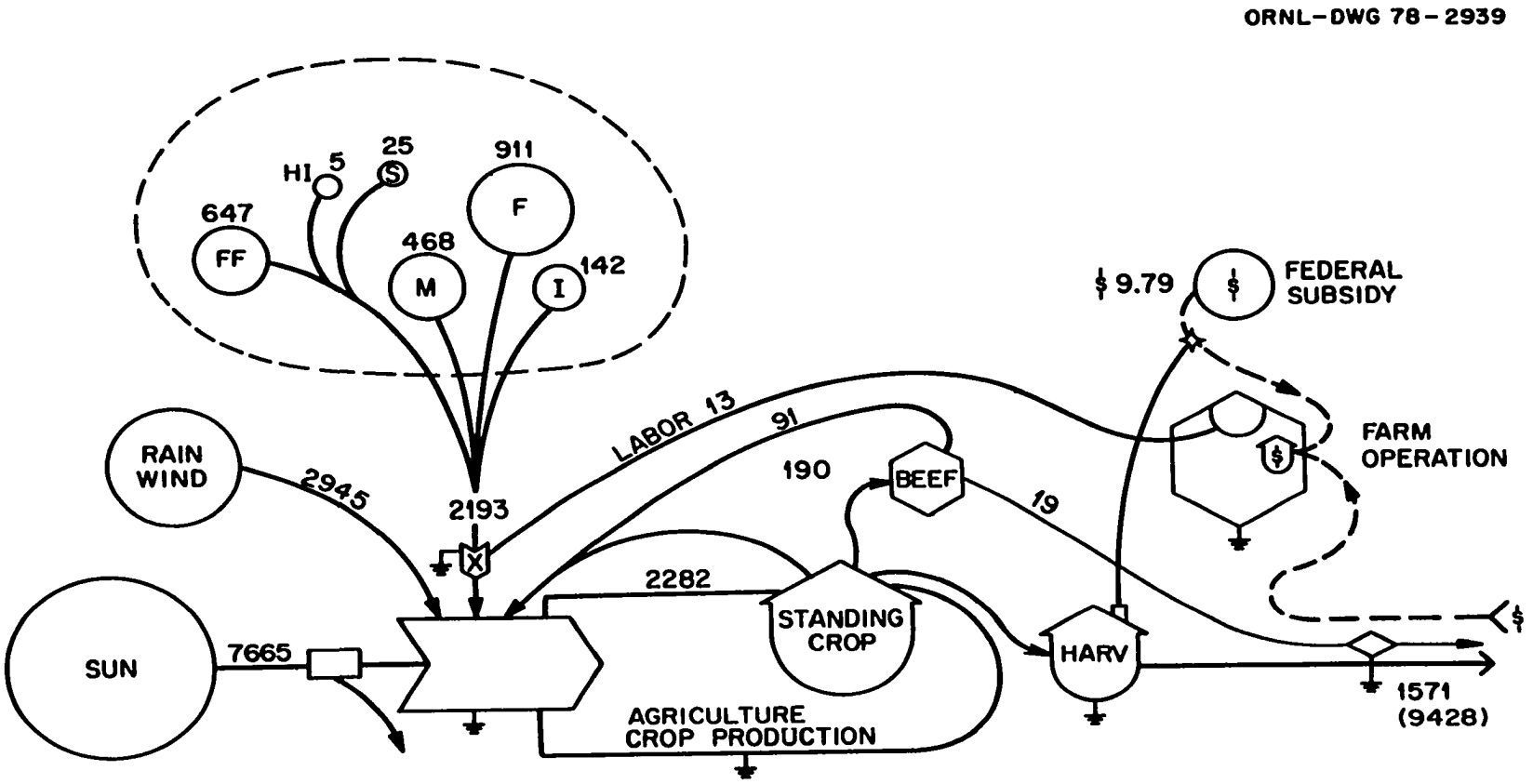

Figure 17. Energy model of agriculture in Cleveland County, Oklahoma. FF — fossil fuel; M — machinery; F — fertilizer; I — irrigation; HI — herbicides and insecticides; S — seeds. Units are 10^3 kcal fuel equivalents/hectare.

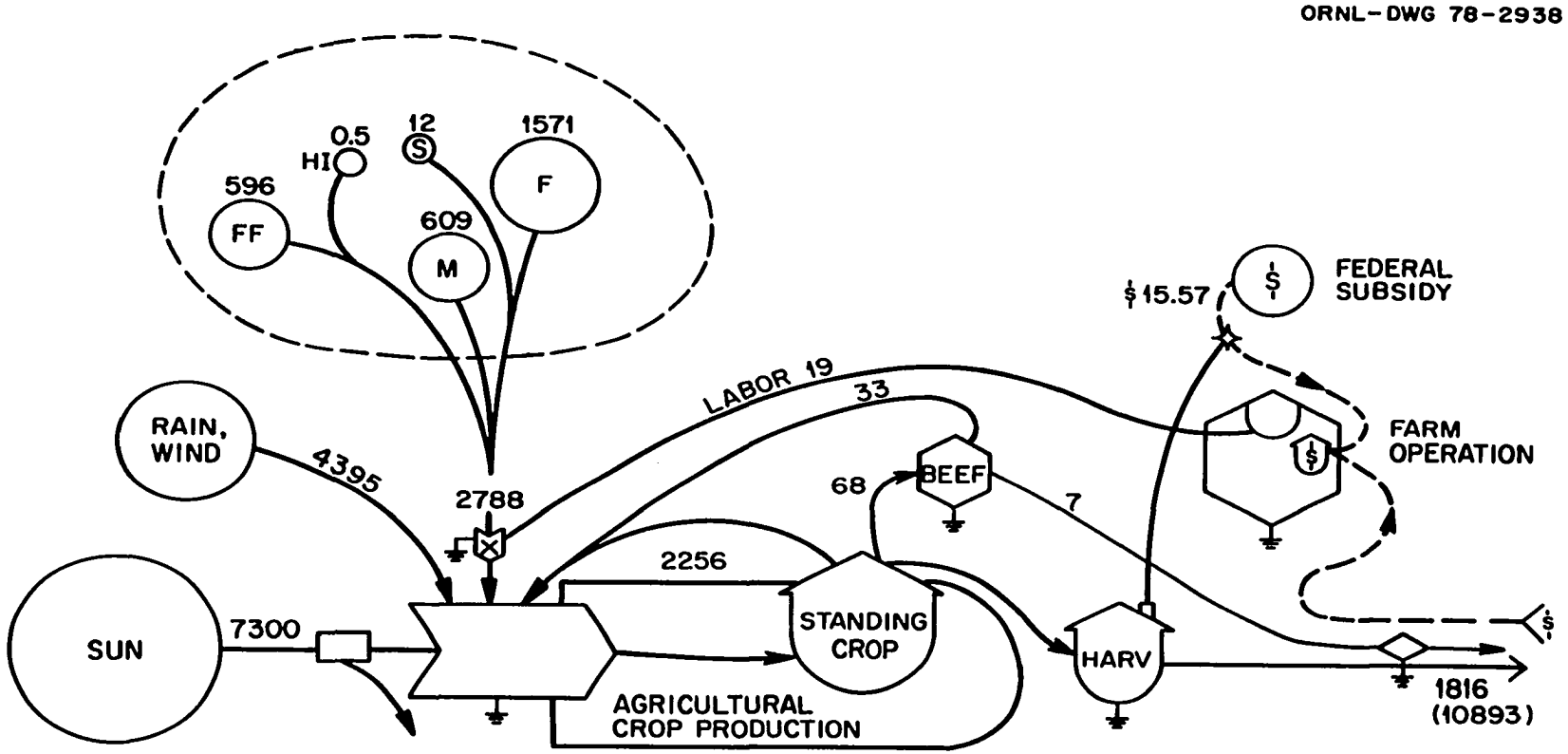

Figure 18. Energy model of agriculture in McCurtain County, Oklahoma. FF — fossil fuel; M — machinery; F — fertilizer; HI — herbicides and insecticides; S — seeds. Units are 10^3 kcal fuel equivalents/hectare.

irrigation (I), that the high levels of crop production can be maintained and in fact the system itself can exist. These five or six major energy sources, enclosed within the dashed lines, are aggregated together to form a major forcing function intrinsic to the maintenance of the agricultural system as it currently exists within the counties. It should be pointed out that the fuel-based energy inputs shown here are not necessary for all agricultural systems such as those discussed by Carter (1969), Rappaport (1971), and Johnson, et al. (1977), but for the agroecosystems discussed here.

Through the above interactions of the sun, rain, and fuel-based energies, gross primary productivity occurs of which approximately 70 percent is converted to net primary productivity yielding an annual standing crop within the autotrophic symbol. Portions of the standing crop are grazed by consumers, mainly beef cattle and cows, either before harvest (small grains) or after harvest (corn or sorghum stubble or crop hay). Some of the standing crop is harvested and exported from the system, while some is returned to the system in the form of unharvested organic matter. The harvest, depicted by the tank symbol, is, of course, the main goal of the manager of the agroecosystem. The size of the harvest acts as a sensor controlling the flow of federal funds to the farm operation. Also shown in the diagram is man's direct role in the farm operations which control the flow of fuel-based energies into the primary production interaction symbol. Not shown, but implied throughout the model is man's role in the controlled grazing of the crops and crop residues by beef, as well as the harvest and transport of the crop.

Agricultural Energy Subsidies

The levels of agricultural primary productivity and the high percentage of yield harvested from these species requires a sizeable energy input by man. The total amount of energy input is the sum of both that associated with man's manipulation of the system as well as that associated with the natural energies available to the system. Since Texas, Cleveland and McCurtain Counties have different climate and physiography, the external energy inputs needed to maintain the managed agroecosystems will also differ. The results presented here support this prediction. For example, soils in Texas County had high natural levels of potassium; thus potassium fertilizer was unnecessary. The same relationship was true for the addition of phosphorus for many dryland crops. On the other hand, McCurtain County crops required no irrigation but did require nitrogen, phosphorus, potassium and sometimes lime.

The data detailing the inputs needed for a particular crop were obtained from the Crop and Livestock Budgets for Texas (Fawcett 1975), Cleveland (Okla. St. Univ. Ext. Svc. 1975), and McCurtain Counties (Williams 1975). The inputs required for each crop are those based on averages from individual farmers, the Cost Finder Record Program, and Oklahoma State University Research (Williams 1975). Although individual practices of farmers vary, it was felt that these figures were the most representative available. The inputs were converted to Kcal Fuel Equivalents using conversion values listed in Table 4. A typical example of the calculation involved is shown in Table 8.

Table 8. Example of process to convert agricultural inputs to kcal of fuel equivalents.

County: McCurtain
Crop: Oats for Grain

Inputs per acre		x Conversion Factor	= Energy Input (kcal FE)	Source
Seed	3 bu.	$67{,}555_{(.05 \div 2/3)}$	15,353	1
Fertilizer				
N	70 lb	6,134	429,380	2
P	60 lb	188	11,280	2
K	20 lb	188	3,760	2
Total	—		444,420	
Herbicide	0			
Insecticide	0			
Fuel				
(Diesel)	5.26 gal.	35,280	176,864	2
Lube	0.126 gal.	35,247	444	2
Total			171,305	
Machinery				
Repair	$1.30	8,781	11,416	2
Depreciation	$8.90	11,390	101,370	2
Human Labor	$2.62/hr	$\frac{16{,}000}{8}$	5,240	2

1 – One bushel of seed weighs 32 lbs dry-weight. Therefore 32 lbs/bu x 454 g/lb x 4.65 kcal/g (Kobriger 1973) = 67,555 kcal/bu.

2 – See Table 4.

The breakdown of fuel-based energy inputs (Table 9) indicate a number of differences between the three counties. For example, indicative of soil fertility, the fertilizer requirement per ha in Texas County is approximately one-third that of Cleveland and one-sixth that of McCurtain. There is a difference between fertilizer requirement versus need. The fertilizer applied within the counties was 1-1/2 to 2 times that required (Okla. St. Dept. Ag. 1975). However, since no breakdown of fertilizers applied per crop was available, the total required per crop was used. Machinery related energy expenditures are greatest in McCurtain County, attributable to the rougher terrain under cultivation as well as an emphasis on crops requiring a lot of mechanical wear and tear – hay, cotton, peanuts. This fact is also emphasized by the higher machinery/fossil fuel energy ratio in the county. The low fossil fuel and machinery energy values for Texas County are caused by the level to gently rolling terrain, the large size of the farms, and the wide expanse of individual crop monocultures.

Irrigation is the single energy subsidization which is most distinct. In Texas County the energy required for irrigation accounts for 76.5 percent of the total fuel-based energies required, though only 33 percent of the county's cropland is irrigated. The high dependence on irrigation in Texas County is the greatest per farmed area in Oklahoma. The annual rate of application is compared with the rest of the state in Fig. 19.

Herbicide and insecticide energy inputs are also significantly greater, almost 100 times, in Texas than the other two counties. This

Table 9. List of the subsidized inputs required to maintain the principal agricultural crops in Texas, Cleveland and McCurtain Counties. All values are in Fuel Equivalents/hectare/year.

	Fossil Fuel	Fertilizer	Machinery	Herbicide Insecticide	Irrigation	Seed	Human Labor	Total
				Texas County				
Alfalfa Hay	801177	86025	1269069	679250	20805852	1795	37198	23680366
Barley-Dryland	304534	0	300085	0	0	10794	3798	619211
Barley-Irrigated	881580	1212202	546660	0	6976273	16111	24404	10650957
Corn-Grain	1105288	2897261	1221362	516230	9889715	5554	40755	15676164
Corn-Silage	859113	2897261	357432	516230	9889715	5554	40755	14566059
Oats-Irrigated*	881000	1363650	546224	0	6976273	31849	24404	9801400
Rye-Irrigated*	881000	1363650	546224	0	6976273	26694	24404	9796245
Sorghum-grain Dryland	646204	757549	186749	230945	0	1004	9633	1832084
Sorghum-grain Irrigated	1120688	2272647	694046	266266	9889715	2511	32357	14278230
Soybeans	959103	23218	223821	2717	15046005	26867	28553	16310284

Table 9 (continued)

	Fossil Fuel	Fertilizer	Machinery	Herbicide Insecticide	Irrigation	Seed	Human Labor	Total
Wheat-Dryland	443995	454480	362711	0	0	12083	9188	1282457
Wheat-Irrigated	880419	1515098	545787	0	6976273	16111	24404	9936092
			McCurtain County					
Alfalfa Hay	896181	528827	1101795	0	0	1795	32258	2540856
Tame Hay	622820	2782900	694808	0	0	0	23070	4123598
Corn-Silage	721277	1609136	395961	203775	0	5407	17043	2952599
Cotton	539095	248161	950459	858572	0	8010	14672	2618969
Oats-Grain	504189	1097717	278581	0	0	31849	12943	1924919
Oats-Hay	598824	1253877	550680	0	0	31849	12943	2448167
Peanuts	861662	255126	855271	478464	0	30838	23261	2504628
Rye-Grain	403121	1419311	400091	0	0	26694	12546	2261763
Rye-Seed	497638	1419311	567648	0	0	1255	16549	232570
Sorghum-Grain	533351	1055342	420402	298870	0	1255	17043	2849182

Table 9 (continued)

	Fossil Fuel	Fertilizer	Machinery	Herbicide Insecticide	Irrigation	Seed	Human Labor	Total
Sorghum-Silage	721277	1509871	395961	203775	0	1255	17043	2849182
Soybeans	541412	255126	378512	27170	0	17911	14079	1234210
Wheat (I&II Soils)	581850	1253871	495950	0	0	24167	9831	2365670
Wheat (II&III Soils)	598251	1097717	445851	0	0	24167	9831	2178817
			Cleveland County					
Alfalfa Establishment	440480	1374654	113873	0	0	5407	10061	1944475[a]
Alfalfa Hay	801177	478488	720612	142643	(10402185)	1764	24058	(12570926) 2168741
Bermuda Grass Establishment	344577	3355841	92899	4940	0	—	7963	3806220[a]
Bermuda Grass Hay	895289	2264146	718759	0	0	0	20995	3899183
Barley	773481	1074499	342756	0	0	24167	16498	2231500
Corn	721277	1609136	395962	023775	0	5407	17043	2952600
Cotton	601319	503287	877099	199700	0	4806	15462	2201673

Table 9 (continued)

	Fossil Fuel	Fertilizer	Machinery	Herbicide Insecticide	Irrigation	Seed	Human Labor	Total
Oats	415783	936920	454992	0	0	31849	9633	1849177
Peanuts	861662	255126	855271	478464	0	30838	23267	2504628
Rye	403121	1419311	400091	0	0	26694	13115	2262332
Sorghum-Grain	936846	2324310	272923	203775	0	3766	11955	3753574
Sorghum-Silage	667120	1515098	485211	203775	0	3766	16796	2891765
Soybeans	625137	248161	233872	27170	0	14926	13832	1162098
Wheat	238553	1226009	299122	0	0	16111	5335	1785130

*Values obtained from averaging wheat and barley.

[a]Initial costs only.

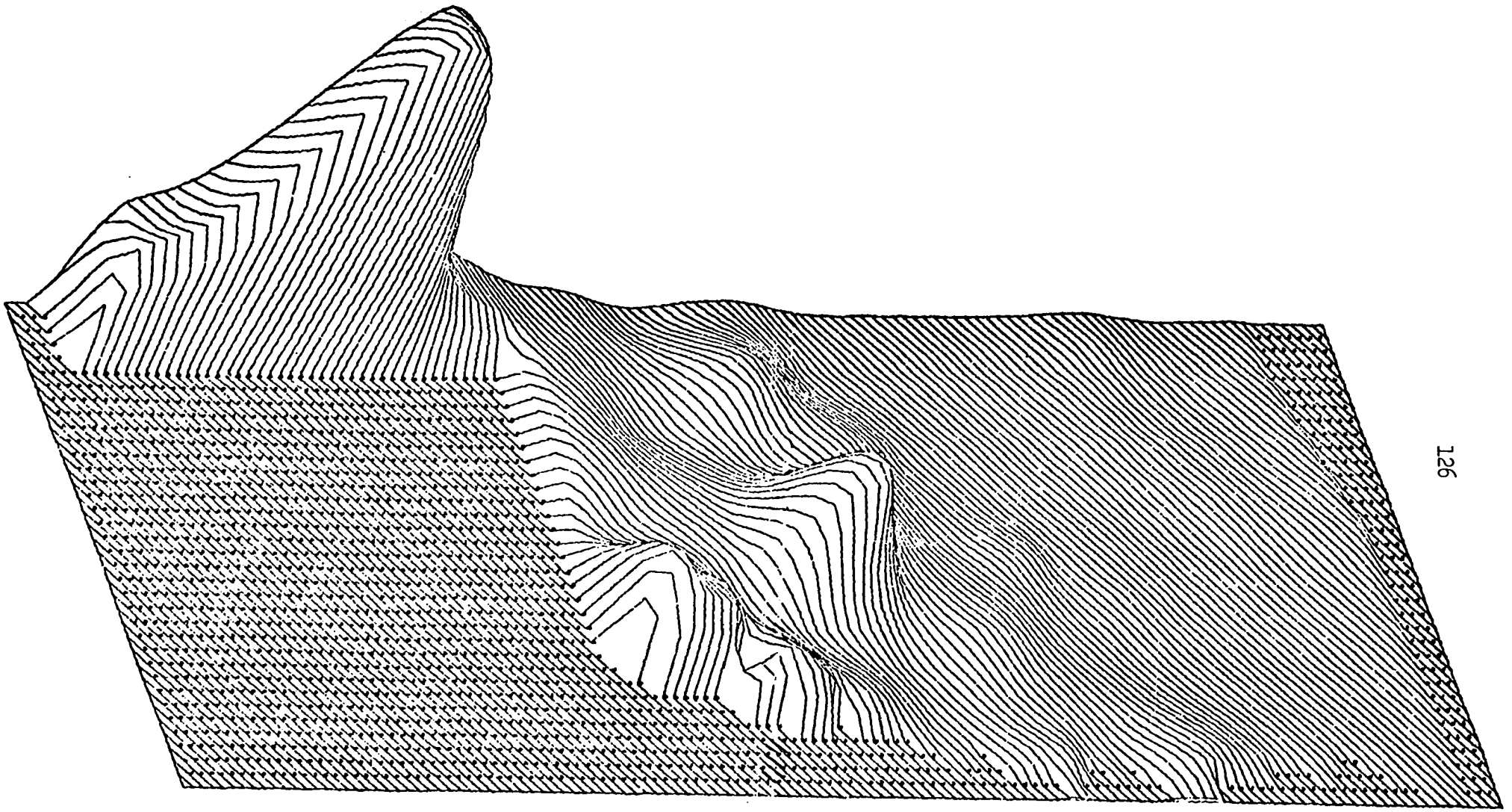

Figure 19. Three-dimensional SYMVU portrayal of 1971 agricultural irrigation (cm/ha) per county in Oklahoma.

results principally from the type of crops (those that require more protection) rather than a greater predation or competition stress.

The conversion of all the fuels and materials needed to maintain agriculture in the counties into fuel equivalents affords a comparative view of the major limiting factors. Within Texas County moisture is obviously the most limiting; in McCurtain County – good soils and suitable terrain; and Cleveland County lies somewhere in between.

The federal subsidy into the agricultural system stems primarily from peanut, cotton, feedgrain and wheat allotments. Texas County has the greatest wheat allotment of any county in the United States and farmers received nearly $2,000,000 in 1974. Combined with the allotment for feed grains this totalled over $3,540,000 or $8.08/ha. McCurtain County received the highest dollar/hectare amount of $15.57, mainly from cotton allotments and price supports for peanuts. Cleveland County had a mixed base averaging $9.79/ha. Except for the peanut price support (which may soon end as indicated by recent congressional action) the federal subsidies can be considered as a buffer for the farmer to protect against the dangers of instability of the agroecosystem. As indicated by the increasing trend of irrigated agriculture in the Great Plains and the payment of almost $30,000,000 in Federal Crop Insurance benefits in 1974 (TIE 1976) due to losses caused by drought – adequate moisture is the most uncertain of the numerous ecosystem parameters.

Whatever the situation, the crop insurance programs appear to be important monetary safeguards to protect those in agriculture from

losses due to environmental instability. If the conversion figure of 25,000 kcal/FE/$ is used this represents an energy contribution of 202, 245 and 389 x 10^3 kcal FE/ha for Texas, Cleveland and McCurtain Counties, respectively. This represents an additional sizeable energy subsidy into the agroecosystem.

Agroecosystem Output

As shown in Fig. 11, the distribution and intensity of agricultural production varies across the state of Oklahoma and in the three counties under detailed investigation. There are three reasons for this variance: 1) the natural properties of the environment, 2) the amount and kind of subsidization and management by man, and 3) the genetically determined production capacity of the crops themselves. Only the first two are examined in the study.

Crop yields, net primary production (NPP), and gross primary production (GPP) are given in Table 10 for each county and summarized in Table 11.

Crop Production. Note in Table 10 that two productivity values are sometimes given for one crop: one for crop yield per planted acre and one per harvested acre. The difference is due to one of three factors: 1) In some situations the harvested yield versus planted yield may reflect the influence of irrigation, but since separate irrigated-nonirrigated yields are not reported it was often impossible to separate the two. 2) In some cases, as in Texas County, a harvested yield for corn or alfalfa will be that of an irrigated crop. In other situations, a low percentage of the cropland devoted to small grain being harvested

Table 10. Average yields, conversion figures, net primary production (NPP) and gross primary production (GPP) of the major crops grown in Texas, Cleveland and McCurtain Counties.[a]

-CLEVELAND COUNTY-

CROP	Average Yield/Acre	Yield-NPP Conversion	Total NPP-in t/ha Average	Range (± lsd)	Ave. NPP 10^6 Kcal/ha	Ave. GPP 10^6 Kcal/ha
Alfalfa	2.76T	3.712	10.24	8.87-11.62	45.056	64.366
Tame Hay	1.53T	3.250	4.97	4.12-5.72	20.377	39.110
Barley-planted	25.6bu	.1587	4.06	3.05-4.98	17.052	24.360
-harvested	30.4bu	.1587	4.82	3.98-5.67	20.244	28.921
Corn Grain	33.9bu	.1382	4.68	3.39-5.98	19.656	28.080
Sorghum Grain	31.1bu	.2019	6.28	4.80-7.75	26.376	37.537
Cotton	2421b	.0015	2.78	1.85-3.71	11.676	16.680
Oats-planted	14.2bu	.1662	2.36	1.76-2.96	9.912	14.160
-harvested	33.0bu	.1662	5.48	4.07-6.88	23.016	32.881
Rye-planted	4.6bu	.2072	0.95	0.89-0.99	3.990	5.700
-harvested	19.1bu	.2072	3.96	3.75-4.16	16.632	23.760
Soybeans	15.8bu	.2679	4.23	3.70-4.77	18.612	26.589
Peanuts	11871b	1.973×10^{-3}	2.34	1.67-3.01	10.764	15.377
Wheat-planted	19.8bu	.2483	4.92	3.63-6.21	20.664	29.521
-harvested	27.2bu	.2483	6.75	5.56-7.95	28.350	40.501

Table 10 (continued)

-TEXAS COUNTY-

CROP	Average Yield/Acre	Yield-NPP Conversion	Total NPP-in t/ha Average	Range (± lsd)	Ave. NPP 10^6 Kcal/ha	Ave. GPP 10^6 Kcal/ha
Alfalfa	3.30T	3.712	12.24	9.39-15.11	46.068	65.813
Tame Hay	1.22T	3.250	3.96	2.86-5.07	16.236	23.145
Barley-planted	14.7bu	.1587	2.44	0.98-3.96	10.248	14.640
-harvested	23.7bu	.1587	3.94	2.79-5.09	16.548	23.640
Corn Grain	102.9bu	.1382	14.22	12.67-15.76	59.724	85.322
Sorghum Grain						
planted	46.6bu	.2019	9.41	7.91-10.88	39.522	56.461
harvested	49.0bu	.2019	9.89	8.34-11.45	41.538	59.341
Oats-planted	16.6bu	.1662	2.76	1.78-3.74	11.592	16.560
-harvested	22.4bu	.1662	3.72	2.39-5.05	15.624	22.320
Rye-planted	2.4bu	.2072	0.50	0.42-0.58	2.100	3.000
harvested	12.2bu	.2072	2.52	2.07-2.98	10.584	15.120
Soybeans	19.2bu	.2679	5.14	3.99-6.30	22.616	32.309
Wheat-planted	11.7bu	.2483	2.91	1.89-3.92	12.222	17.460
harvested	17.2bu	.2483	4.27	2.78-5.76	17.934	25.621

Table 10 (continued)

-McCURTAIN COUNTY-

CROP	Average Yield/Acre	Yield-NPP Conversion	Total NPP-in t/ha Average	Range (± lsd)	Ave. NPP 10^6 Kcal/ha	Ave. GPP 10^6 Kcal/ha
Alfalfa	2.82T	3.712	10.47	8.98-11.95	46.068	65.813
Tame Hay	1.57T	3.250	5.10	3.02-7.18	21.420	30.601
Barley-planted	16.8bu	.1587	2.67	1.76-3.89	11.214	16.020
-harvested	29.8bu	.1587	4.73	3.56-5.89	19.866	28.381
Corn Grain	29.7bu	.1382	4.10	3.26-4.93	17.220	24.660
Sorghum Grain	33.1bu	.2019	6.68	5.01-8.38	28.056	40.081
Cotton	3231b	.0015	3.71	2.78-4.64	15.582	27.260
Oats-planted	11.7bu	.1662	1.94	1.56-2.29	8.148	11.640
-harvested	34.2bu	.1662	5.68	4.60-6.76	23.856	34.081
Rye-planted	2.4bu	.2072	0.50	0.39-0.62	2.100	3.000
-harvested	13.6bu	.2072	2.82	2.24-3.40	11.844	16.920
Soybeans	25.9bu	.2679	6.94	5.95-7.96	30.536	43.624
Peanuts	8761b	1.973×10^{-3}	1.72	1.48-1.99	7.912	11.303
Wheat-planted	15.7bu	.2483	3.90	1.79-6.01	16.380	23.400
-harvested	23.8bu	.2483	5.91	4.69-7.13	24.822	35.461

Table 10 (continued)

[a]Crop production data was obtained from the Oklahoma Crop and Livestock Statistical Reporting Service. Crop yields for each county were averaged for the last 10-15 years depending on the crop (e.g. corn wasn't raised in Texas County till after the mid-sixties with the onset of irrigation and the establishment of nearby feedlots). Biomass values were converted to caloric equivalents with values obtained from a number of sources (National Academy of Sciences 1969, Kobriger 1973). GPP was determined assuming that respiration in crop plants is approximately 30 percent of GPP (Golley 1970, Gorden 1969, Loomis 1976).

Table 11. Area and total net (NPP) and gross (GPP) primary production of the principal crops grown in Texas, Cleveland, and McCurtain Counties.

	Texas			Cleveland			McCurtain		
County		– x10^9 kcal –			– x10^9 kcal –			– x10^9 kcal –	
Crop	ha	NPP	GPP	ha	NPP	GPP	ha	NPP	GPP
Alfalfa	312	14.373	20.533	1551	69.882	99.861	1146	52.794	75.443
Barley	769	10.885	15.550	223	3.905	5.580	45	.425	0.607
Corn[1]	27566	1645.754	2351.077	381	7.488	10.700	134	2.307	3.297
Cotton	—	—	—	385	4.133	5.906	587	9.146	13.070
Oats	243	3.669	5.241	2420	44.613	63.752	332	6.200	8.860
Peanuts	—	—	—	24	0.248	.354	162	1.282	1.832
Rye	146	1.044	1.491	835	9.083	12.980	720	6.428	9.186
Sorghum[2]	60729	2407.770	3439.253	1757	46.316	66.186	154	4.321	6.175
Soybeans	118	2.699	3.813	385	7.166	10.240	4980	152.069	217.307
Tame Hay	2632	42.733	61.047	3158	64.331	91.929	7571	162.171	231.742

Table 11 (continued)

County	Texas			Cleveland			McCurtain		
		— x10^9 kcal —			— x10^9 kcal —			— x10^9 kcal —	
Crop	ha	NPP	GPP	ha	NPP	GPP	ha	NPP	GPP
Wheat	174494	2810.429	4014.899	5789	152.996	218.631	725	16.282	23.267
Total[2]	267009	6939.356	9913.366	16908	410.141	586.091	16556	413.425	590.784
Ave.		25.989x10^6	37.127x10^6		24.257x10^6	34.517x10^6		24.971x10^6	35.684x10^6

[1]Includes crops grown for both grain and silage.

[2]Total was adjusted to most recently available land-use data for total county energy budget.

(especially rye) may reflect the result of a small grain-graze out. 3) And finally, the low yields per planted area are often indicative of a crop failure due to climatic conditions. Where planted and harvested yields differ, the calculation of total county NPP and GPP values included an average percentage of harvested and unharvested acreage.

Three points of discussion arise from Tables 10 and 11. 1) The yields of some crops grown in Texas County, e.g. corn and sorghum, dramatically exceed the yields obtained in Cleveland and McCurtain Counties; yet many other crops have significantly lower yields in Texas County than in Cleveland and McCurtain. 2) The total production in Texas County vastly exceeds that of the other two counties combined. The first point is a result of Texas County's dependency on irrigation as discussed previously; the second point is a result of Texas County's major land-use commitment to agriculture. 3) A less obvious point is the range of the crop production. The range of one standard deviation from the mean can be considered as the yearly biological gamble with which the manager of the agroecosystem has to contend. In other words, given a certain amount of energy input into the system, a certain "average" amount of energy conversion (NPP) by the primary producers can be expected. However, there exists a chance that a 'hoped for' higher conversion may occur increasing the input-output efficiency ratio. Just as likely the lower value may be reached, thus bringing a lower energy return on the investment. Taking it a step farther, this range of return can be defined as an indicator of the system's stability in relation to the specific crop being grown. For example, cotton grown in both Cleveland and McCurtain Counties exhibited the

highest variability around its mean of all the crops grown. Cotton acreage in these counties has also decreased by more than 50 percent in the last few years, which is indicative of the farmers' refusal to gamble with the variability of the system. (The yield of cotton was substantial enough to influence the farmers to continue cotton during "good years".) Texas County's variability was quite often much higher for some crops than the other two counties. The variability of alfalfa and soybean production was also more variable. However, the high dollar value of these crops paid for by local feedlot operators is incentive enough for the continued raising of these crops. Oat production was also more variable in Texas County, although corn and sorghum production was less variable than in the other counties presumably as a result of irrigation and higher yields.

Total Output. It has been suggested by some (Odum 1973) that the measure of the value of primary producers to an ecosystem is their gross production. However, within the GPP is the NPP much of which may never be returned to the agricultural system because of its being harvested. Therefore, it was necessary to determine how much of the production energy remained in the system and how much was exported through harvest and grazing. Values from lands grazed were obtained from a listing of AUM's (Animal Unit Months) for each crop in the Oklahoma Crop and Livestock Budget Generators. All energy values for crop production, harvest, grazing, etc. were converted to fuel equivalents as described in the Methods Section. One exception to the conversion process was cotton. In order to compensate for its important value as a fiber (and the

concentration costs of the entire plant). The caloric value of cotton was multiplied by 10 prior to its conversion to fuel equivalents. This conversion was based primarily on its market price and the conversion into fuel equivalents.

Net primary production was highest in Texas County (Table 11) but harvested output was highest in McCurtain County equalling 778 x 10^3 kcal FE/ha (4668 x 10^3 kcal sugar equivalents). Texas County's harvested output was 709 x 10^3 kcal FE/ha (4252 x 10^3 sugar equivalents), while Cleveland County had both the lowest NPP and lowest harvested output – 673 x 10^3 kcal FE/ha (4041 x 10^3 kcal sugar equivalents). Cleveland County did have the highest amount of the NPP being grazed – 81 kcal FE/ha. It is interesting to note at this point the differences between harvested portion of the NPP. In the Oklahoma Primary Productivity Profile, NPP was used as a common denominator to evaluate different systems. If we compare the NPP of Cleveland County with that of McCurtain County they are very similar, 1733 and 1774 kcal FE, respectively. However, the harvested output in McCurtain County was 16 percent greater than Cleveland's. Thus, the manager of the system obtains considerably more out of a hectare of land in McCurtain County than in Cleveland, though the difference is somewhat reduced if grazing is considered. In both cases a similar amount of energy in the form of unharvested NPP is returned to the system. Texas County's had the highest unharvested energy return. The primary value of the unharvested energy return to the system is through its contribution as an organic matter source to the soil, but there are others such as nutrient cycling, etc.

Comparative Efficiencies

An important parameter in the evaluation of energy flow in any ecosystem is efficiency. As used here, following E. P. Odum (1971), ecological efficiency is a dimensionless ratio between energy flows at different points along the trophic system. Specifically, efficiency will refer here to ratios between primary production parameters and the necessary energy inputs required to maintain the system in its present state. For a further discussion on the concepts of ecological efficiencies see Kozlovsky (1967) and Conrad (1977). It should be stressed here that peak efficiency is not always the most desirable for a biological system, since it may only come at the expense of maintenance. Furthermore, natural systems often bypass efficiency in favor of a more rapid growth during periods of early succession (Odum and Pinkerton 1955). However, if we view the agroecosystems as being in a steady state maintained by cultural inputs, the efficiencies of these systems afford a good reference point for comparative purposes.

Table 12 lists a number of energy comparisons for the three counties. Texas and Cleveland have identical ratios of net primary production to solar input. McCurtain County has a higher ratio indicative of the longer growing season and more plentiful rainfall, even though solar input is less. In other words, the matching of total available natural energies and NPP in McCurtain County is greater than in the other two counties. NPP per fuel-based energy input was highest in Cleveland and lowest in Texas County. When both the solar and fuel-based energies are summed and compared with NPP, additional insight is gained. Both Cleveland and McCurtain Counties have identical ratios

Table 12. Comparison of the energy inputs and outputs of three county agricultural ecosystems.

County	Texas	Cleveland	McCurtain
$\frac{NPP_{fe}}{SOLAR_{fe}}$	.266	.226	.243
$\frac{NPP_{fe}}{FUEL\ BASED}$	.562	.790	.636
$\frac{NPP_{fe}}{TOTAL_{fe}}$	.161	.176	.176
$\frac{HARVEST_{fe}}{FUEL\ BASED}$	.215	.307	.279
$\frac{HARVEST_{se}}{FUEL\ BASED}$	1.29	1.84	1.67
$\frac{HARVEST_{fe}\ \&\ GRAZED_{fe}}{FUEL\ BASED}$	.238	.344	.289
$\frac{HARVEST_{fe}\ \&\ GRAZED_{fe}}{TOTAL_{fe}}$	.064	.076	.080
$\frac{HARVEST}{NPP}$	.382	.389	.439
$\frac{SOLAR_{fe}}{FUEL\ BASED}$	2.49	3.50	2.61

fe = fuel equivalents.

se = sugar equivalents.

while that of Texas County is significantly lower. Thus, the NPP/energy input ratios suggest a number of axioms concerning agricultural primary production in Oklahoma. The evaluation of land use across the state employing primary production values may seriously misjudge the natural value of the land. For example, the average agricultural NPP of 1856 kcal FE/ha in Texas County was considerably higher than that in the other two counties. But also higher are the solar and the fuel-based energy inputs resulting in comparatively lower input-output efficiency value. The lower NPP/total energy ratio also suggests that both Cleveland and McCurtain County have a competitive advantage in their agricultural systems.

Evaluation of the harvested and grazed proportions of the crops corroborates the above theory. In fact comparing the harvested and grazed outputs to fuel-based inputs, Cleveland County has the most favorable ratios. This indicates that in the Cleveland County agro-ecosystem a more favorable energy matching exists between natural energies and fuel-based energies. The matching ratio of 3.50:1 (natural to fuel-based) is significantly higher than in the other two counties (Table 12).

A greater proportion of the NPP was harvested in McCurtain County than in the other counties. As mentioned previously this was viewed as relatively costly in terms of mechanical support costs.

Assessing the counties individually, Texas County has sacrificed energy efficiency for output. This has occurred through the increased utilization of irrigation for the feedgrain and hay crops – corn, sorghum, soybeans, oats, barley, rye and alfalfa. A key factor

in this loss of efficiency has been the availability of cheap energy – primarily natural gas and a ready buyer of the feedstocks in the feedlot industry. Currently, legislation is being considered which would approximately triple the cost of natural gas. The ramifications of such an increase are long reaching in the agricultural world. Specifically, it would force the farmer to pay one dollar per 150,000 kcal instead of the approximately 410,000 kcal he receives now.

Employing a dollar value, the system is profitable including those profits arrived at by the local feedlots where much of the crop production is destined for. Energetically the system exhibits no profit, especially in the light of the declining water level in the region caused by the massive irrigation output. It seems apparent that what will happen is a general curtailment in irrigation with a greater reliance on dryland cropping, including a greater dependence on those species more suitable to dryland tillage, i.e. wheat. The continued level of irrigation could also continue, but the higher costs would have to be supported by the local feedlot industry. Whatever the decision, the inefficient conversion of primary production to beef production will definitely become more expensive. This has already happened as the trend of the fifties and sixties toward feedlot produced beef seems to be reversing (National Science Foundation 1977).

Schwartz (1975) showed that for representative farms in the Oklahoma Panhandle the energy required by irrigated crops per unit of crop output was twice that of the same nonirrigated crops. Thus a reduction of irrigated cropland would increase the overall efficiency of the system, but perhaps not drastically due to lower yields of the

dryland crops and the omission of some of the high energy yielding crops such as alfalfa, corn, and soybeans.

Cleveland County has consistently higher efficiency ratios than did the other two counties. These ratios resulted primarily from 1) the general abstention from farming land marginally or poorly suited for crops, and 2) the predominant reliance on crops such as dryland wheat and sorghum and tame hay which require less fuel-based energy subsidization. Thus the industrialized intensiveness of the agricultural practices is reduced by concentrating more on those species better adapted to the ambient environment. This not only reduced the effort required to manipulate the environment but should also result in an unwillingness to cultivate sites marginally suited for agriculture.

An obvious fact involved in the county comparisons is that Cleveland County actually has relatively little land under cultivation. However, in this analysis it is the quality – energetically speaking – of the land that is being compared. Of special importance in this study is that not only does Cleveland County agricultural land exhibit the more favorable energy efficiency ratios, but that this land is for all practical purposes becoming lost to urbanization. And thus as discussed later agricultural land use in the county has been exhibiting a continual downward trend.

McCurtain County also has relatively little agricultural land in comparison to Texas County. In fact its primary production attributable to agriculture in proportion to the rest of the county is one of the lowest values in the state (Fig. 13). As mentioned before, McCurtain

County has the highest $NPP_{fe}/solar_{fe}$ ratio but a $NPP_{fe}/total_{fe}$ ratio equal to that of Cleveland County. This can be attributed to the farming of some marginal soils (which appears to be decreasing) and the relatively high fertilizer and machinery requirements. Conversion of marginal lands to forestry (discussed later) and the replacement of cotton by soybeans will probably enhance the fossil fuel input/harvest output ratio.

Grazing Systems Energetics

The term range is defined as "all lands producing native forage for animal consumption and lands that are revegetated naturally or artificially to provide a forage cover that is managed like native vegetation" (Huss 1964). Within this study the term rangeland includes both natural grasslands and pastures. Only those systems dominated by grass or grass-shrub communities are considered as falling within this category and thus grazed forestland which would be included in the above definition is not included here. Furthermore, pastureland has been included because it can be considered as an intensely managed range system similar to the analogy between a pine plantation and a forest. Ungrazed rangeland was not included here because it was judged an insignificant component of the land base in the three counties (personal communication, USDA-SCS and ASCS personnel). This section of the dissertation is similar to the section on agroecosystems in that it discusses the models, the energy inputs, the system outputs and output/input efficiencies of the three counties.

Grazing Ecosystem Models

The development of the energy models for rangeland and pasture systems was carried out in a manner similar to that used for the agroecosystems. The energy flow models are depicted in Figs. 20-22. The primary difference between the grazing systems and the agroecosystems is in the harvested component. In agroecosystems it was primary production; in grazing systems it is secondary production, primarily beef cattle. Thus not only is an energy subsidization required to maintain the land-use system (FBEL), but a considerable amount is necessary to maintain the consumers in the system (FBEC). The food subsidy (FS) flow into the beef compartment is dependent on the standing crop compartment. Food subsidy, hay and feed, is thus dependent on the seasonal periodicity of the standing crop as well as the condition of it (e.g. type, overgrazed). The output from the beef compartment is controlled by transportation (T) and strongly influenced by the market price (P) of beef. Not shown in the model, but implied throughout, is the role the management plays in the control of the flow of the energy based subsidies required for the upkeep of the land and cattle, as well as the food subsidies.

Grazing System Subsidies

The energy inputs required to maintain rangeland and pastures is shown in Table 13. The energy subsidization needed for rangeland maintenance is minimal, coming in herbicide applications and/or brush clearing. On the other hand, the energy subsidization required to maintain pastures in Cleveland and McCurtain Counties is considerable

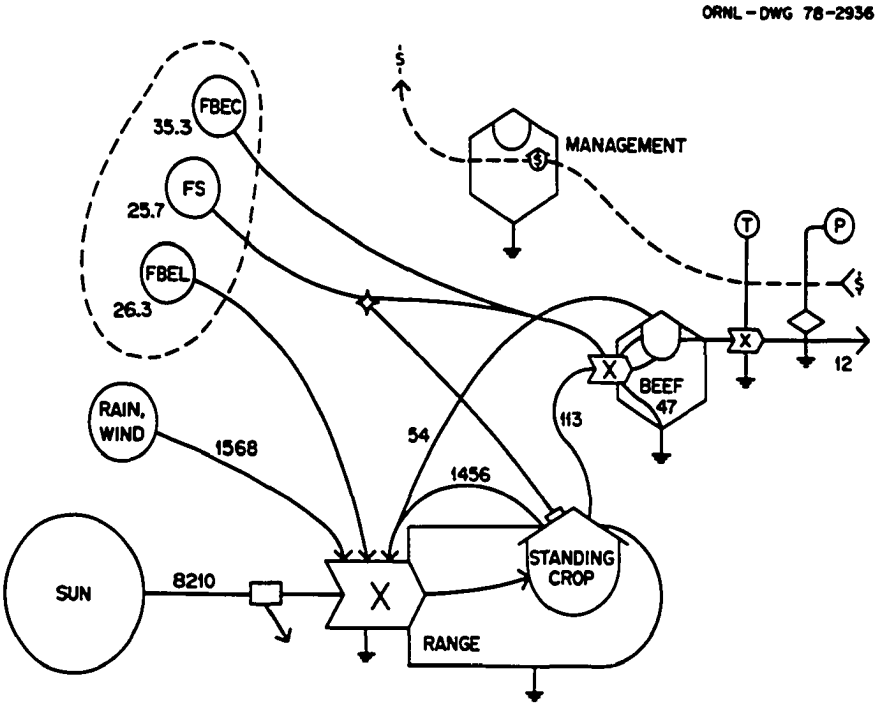

Texas County Range Model

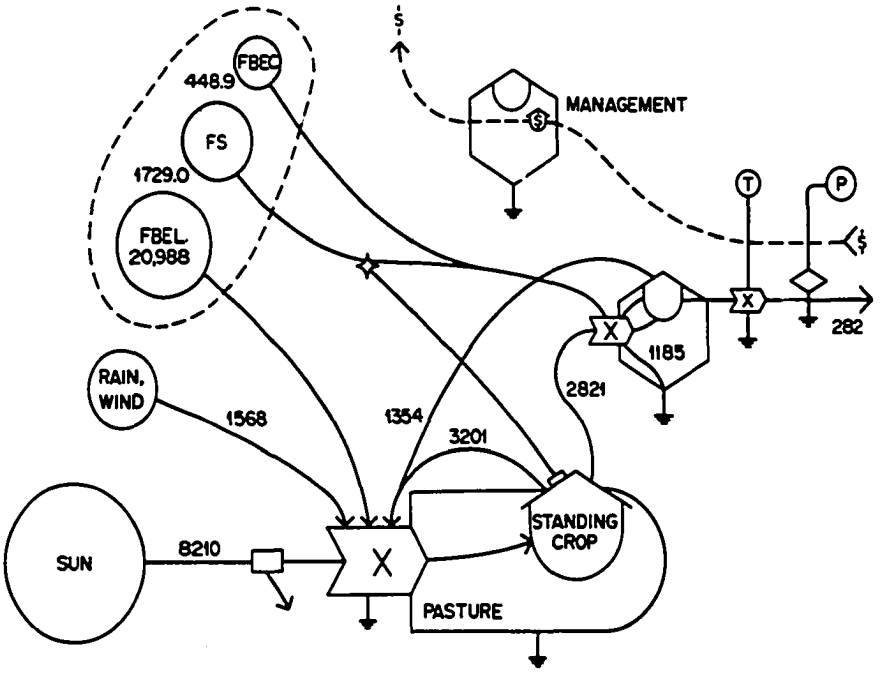

Texas County Pasture Model

Figure 20. Energy models of range and pasture systems in Texas County, Oklahoma. FS – food subsidy; FBEL – fuel-based energy subsidies for land maintenance; FBEC – fuel-based energy subsidies for cattle maintenance. Units are 10^3 kcal fuel equivalents/hectare.

ORNL-DWG 78-2935

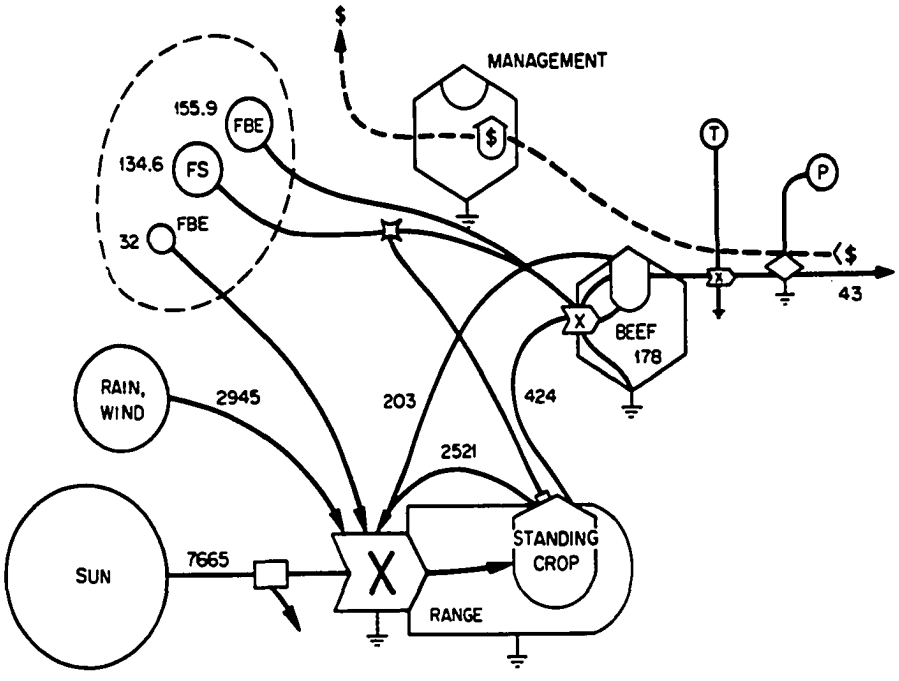

Cleveland County Range Model

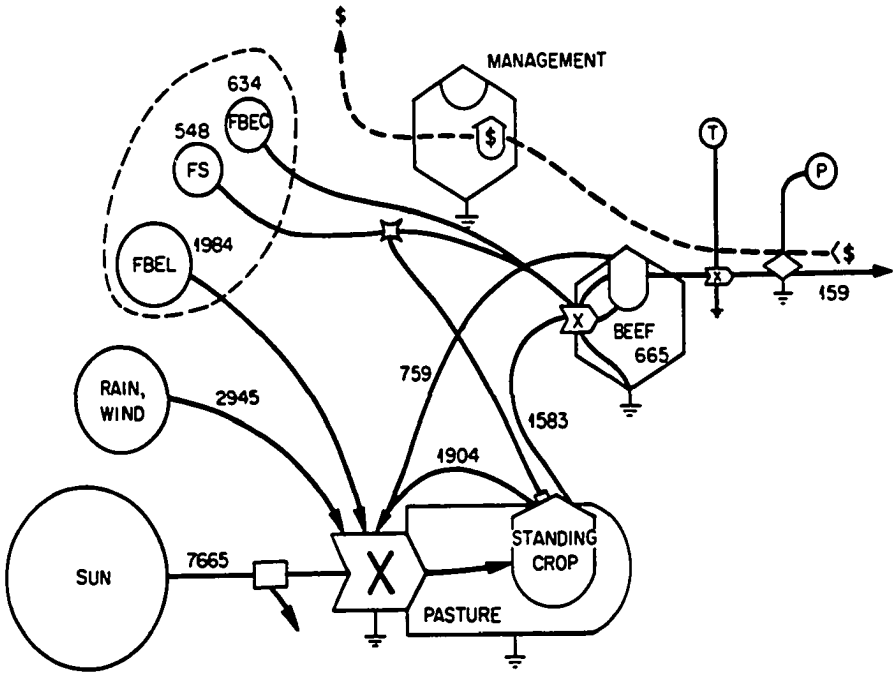

Cleveland County Pasture Model

Figure 21. Energy models of range and pasture systems in Cleveland County, Oklahoma. FS – food subsidy; FBEL – fuel-based energy subsidies for land maintenance; FBEC – fuel-based energy subsidies for cattle maintenance. Units are 10^3 kcal fuel equivalents/hectare.

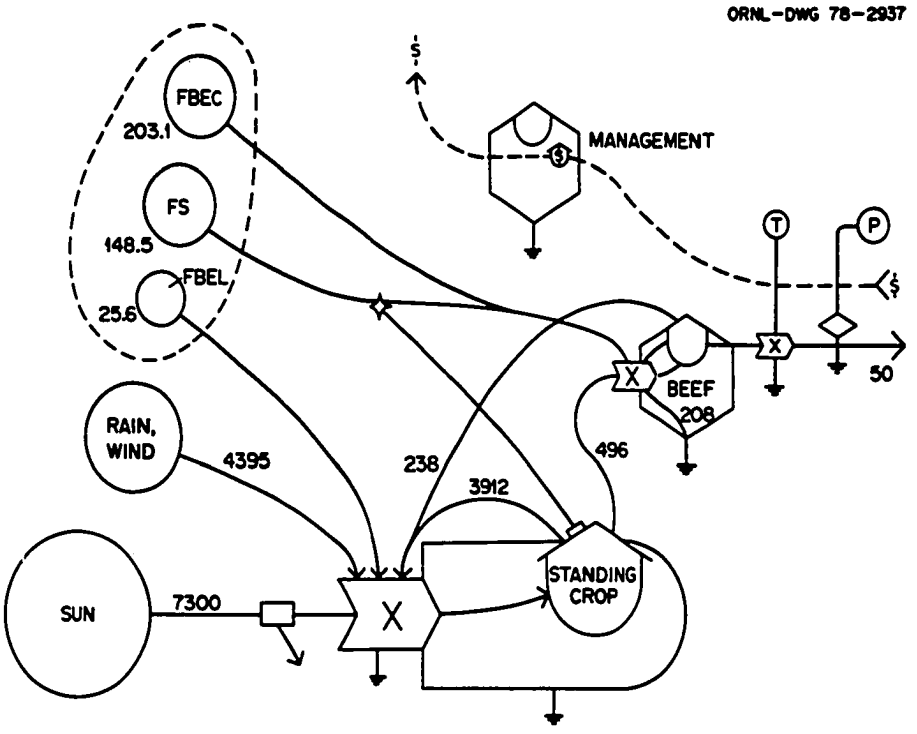

McCurtain County Range Model

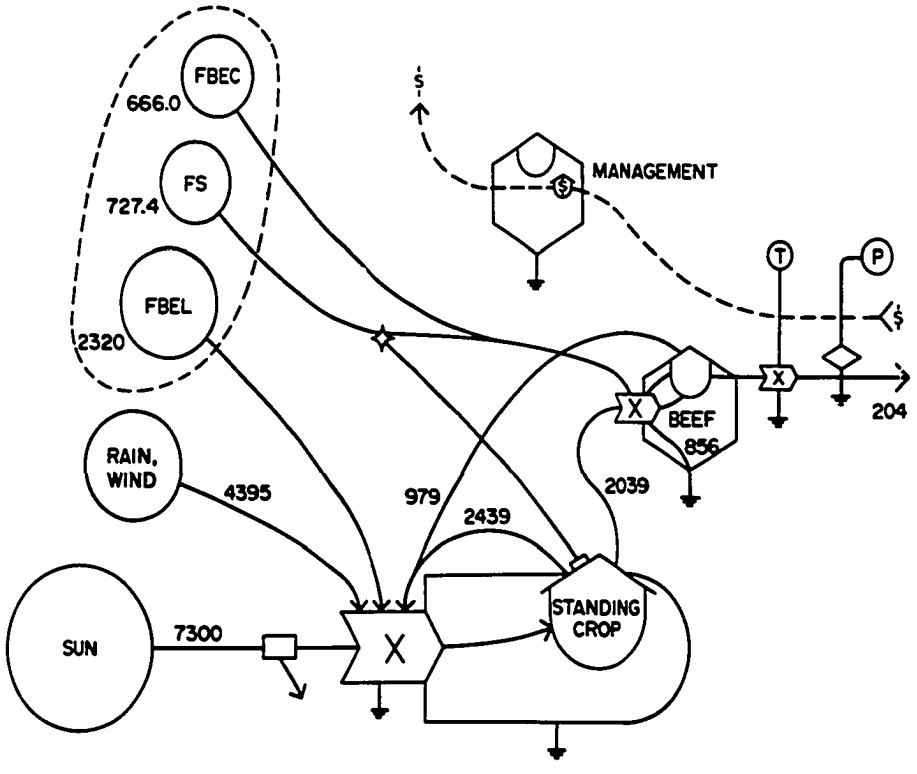

McCurtain County Pasture Model

Figure 22. Energy models of range and pasture systems in McCurtain County, Oklahoma. FS – food subsidy; FBEL – fuel-based energy subsidies for land maintenance; FBEC – fuel-based energy subsidies for cattle maintenance. Units are 10^3 kcal fuel equivalents/hectare.

Table 13. Energy requirements for maintaining rangeland and pastures in Texas, Cleveland, and McCurtain Counties. (Figures do not include energy required for livestock maintenance.)

	Texas		Cleveland		McCurtain	
	Range	Pasture	Range	Pasture	Range	Pasture
	— x10³ kcal FE —		— x10³ kcal FE —		— x10³ kcal FE —	
Fuel-Based Energy[a,b]	26	20,988	32	1,984	26	2,320
Human Labor[c]	<1	12	<1	2	<1	3
Subtotal	26	21,000	32	1,986	26	2,323
Solar	8,210	8,210	7,665	7,665	7,300	7,300
Total	8,336	29,210	7,697	9,651	7,326	9,622

[a]Fuel-based energy (FBEL) includes energy for fuel and lube:[1] fertilizer,[2] machinery and equipment repair[3] and depreciation;[4] and irrigation.[5]

[b]Fuel-based energy breakdown by percent of total according to numbers in a) above Texas County: 1-1.4; 2-9.3; 3.4-0.7; 5-88.6.

Table 13 (continued)

Cleveland County: 1-14.9; 2-77.8; 3,4-7.3.

McCurtain County: 1-6.6; 2-85.5; 3,4-7.9.

[c]Human labor includes both upkeep of rangeland and pastures (e.g., fence-mending, fertilization application, and maintenance of cattle).

[1]Diesel - 35,280 kcal FE/gal (Table 4); oil - 35,247 kcal FE/gal (Table 4).

[2]Fertilizer: N - 6134 kcal FE/lb; P - 188 kcal FE/lb; K - 188 kcal FE/lb (Table 4).

[3]Machinery and Equipment Repair: 9082 kcal FE/$ (Herendeen and Bullard, 1974; auto repair).

[4]Machinery and Equipment Depreciation: 13742 kcal FE/$ (ibid., farm machinery).

[5]Irrigation: irrigation costs for maintenance of pasture were based on fuel and machinery related costs to irrigate alfalfa and small grains in Texas County. (See agricultural section for further discussion.)

and exorbitant in Texas County. Principal energy subsidization requirements for Cleveland and McCurtain pastures stem from fertilizer usage, primarily nitrogenous compounds. This follows the statement by Ward, et al. (1977) that cow-calf operations in the more humid regions of the country are generally heavily dependent on nitrogen fertilizer which represents the major energy input within these regions. The main energy subsidization for pasture maintenance in Texas County is that required for irrigation which comprises 88 percent of the total requirement. These high energy expenditures undoubtably explain why less than 40 ha of pastureland exists within Texas County.

As depicted in Figs. 20-22 and in Table 14 a considerable amount of energy is required to maintain the consumers (beef cattle) in the system. Maintenance costs were based on cow-calf operations undergoing spring calving (Okla. St. Univ. Ext. Svc. 1974, Williams 1974). As discussed by Ward, et al. (1977) and Lockeretz (1975) the energy requirements for maintaining cattle (for gain) depend on a host of factors including age and weight of cattle, food composition – alfalfa, corn, etc. and type of feeding system – range, pasture or feedlot. However, the fuel-based energy required to maintain each cow is similar for all counties for rangeland or pasture, ranging from $450\text{-}675 \times 10^3$ kcal/fuel equivalents.

The total energy subsidization per hectare in Table 14 varies among rangelands of the three counties according to their grazing capacity. Among pastureland it varies according to grazing capacity and the basic energy required to maintain the system. The energy requirements per cow level are the differences found in per hectare

Table 14. Energy subsidization required for maintenance of cattle[a] on rangeland and pastures in three Oklahoma counties. Values are for moderate stocking and average grazing capacities.

	Texas		Cleveland		McCurtain	
	Kilocalories Fuel Equivalents x 10^3					
	per cow	per ha	per cow	per ha	per cow	per ha
Rangeland						
Fuel-Based Energy[b]	569.1	35.3	633.6	155.9	672.4	203.1
Food Subsidy[c]	414.3	25.7	547.1	134.6	491.6	148.5
Total	983.4	61.0	1180.7	290.5	1164.0	351.6
Pasture						
Fuel-Based Energy[b]	448.9	917.5	631.9	726.7	450.6	666.0
Food Subsidy[c]	846.0	1729.0	545.6	627.5	513.5[d]	727.4[d]
Total	1294.9	2646.5	1177.5	1354.2	964.1	1393.4

Table 14 (continued)

[a]Figures do not include the fuel-based energy requirements for maintenance of rangeland or pastureland (see Table 13).

[b]Fuel-Based Energy (FBE) includes energy for livestock supplies,[1] veterinarian and medicine,[2] machinery and equipment repair[3] and depreciation,[4] fuel[5] and lube.[6] Human labor requirements are not included in the above totals, but are listed in Table 13.

[c]Food Subsidy (FS) includes protein supplements,[7] grass hay,[8] and salt and minerals.[9]

[d]Includes energy costs of overseeding pastures with small grains and/or fescue in Fall.

Factors for converting subsidized inputs to kcal FE. All conversions from dollar values are in 1973 $'s.

[1]Livestock supplies: 10,000 kcal FE/$ (compiled from Herendeen and Bullard, 1974).

Table 14 (continued)

[2]Veterinarian services and medicine: 9494 kcal FE/$ (ibid.).

[3]Machinery and equipment repair: 9082 kcal FE/$ (ibid., auto repair).

[4]Machinery and equipment depreciation: 13742 kcal FE/$ (ibid., farm machinery).

[5]Fuel, gasoline: 31248 kcal FE/Gal. (Table 4).

[6]Lube, oil: 35247 kcal FE/Gal. (ibid.).

[7]Protein supplements: 16410 kcal FE/$ (Herendeen and Bullard, 1974; Prepared Animal Feed).

[8]Grass hay: corrected for 85% moisture and 4.40 kcal/g dry wt. Conversion factors to convert biomass to kcal FE are listed in Table 15.

[9]Salt and minerals: 16410 kcal FE/$ (Same as 7 above).

comparison, except for Texas County's irrigated pasture. In McCurtain County pasture costs per cow were close enough to rangeland to make it competitive. In fact, pastureland is actively competing with plantation forestry and forest land as a land-use type (Murphy 1977).

Grazing Systems Output

Primary Production. Primary production of Oklahoma's native grasslands were extrapolated from studies conducted by the Grassland Biome of the U.S. IBP (Sims and Singh 1971) and adjusted to the range conditions within each county. These values closely approximated those obtained in other studies (Riegel 1947; Eck, et al. 1975; Harlan 1960). Table 15 lists the annual net and gross primary production values of rangeland used for the counties within this study. Sims and Singh (1971) reported that the primary production of grazed grasslands is greater than that of ungrazed. This can be attributed to the stimulating effect of grazing (similar to clipping - Eck, et al. 1975) and the more rapid return of minerals to the soil than in a life-death-decomposition cycle. However, higher values were reported on grasslands experiencing a light to moderate grazing treatment. A majority of Oklahoma's rangeland has been (and is) overgrazed (USDA Range Task Force 1972), thus resulting in a decrease in ecosystem productivity. Rangeland primary production in the three counties followed the general primary production trend in Oklahoma (Fig. 14) exhibiting a southeast to northwest decline.

Pastureland normally consists of a monotypic planting of a perennial tame grass species (sometimes overseeded in the fall). Typical

grass species planted in Oklahoma include bermuda grass (Cynodum dactylon), weeping lovegrass (Eragrostis curvula) and fescue (Festuca spp.). The tame grass species are generally more productive than the native climax grassland species they replace (Cabel 1971, Rumsey 1971, Davies and Munro 1974). Based on these studies the aboveground productivity of pasture systems was assigned a value of approximately twice that of the ungrazed rangeland. This coincided with other reported values in Oklahoma (Denman, et al. 1971). Net and gross primary production data for pastureland in the three counties are listed in Table 15.

The primary production differences between the pasture and range systems are immediately obvious. Of particular importance is the fivefold increase in pasture NPP over that of rangeland. The reason, of course, is man's subsidization (primarily irrigation) which will be discussed later. Note should also be made that, although GPP of pasture and rangeland is essentially the same in McCurtain County, NPP is significantly different. This is indicative of how the forage crops have been bred and how man has substituted his inputs for some of the plants' normal maintenance activity. Thus more of the GPP can be channeled into the NPP.

Secondary Production. In the agroecosystems management centers around the harvesting of primary production; in the grazing systems it is concerned with harvesting secondary production. This is the reason for the existence of pastureland or intensely-managed grazing systems. The principal grazers within the three counties are beef

Table 15. Annual net (NPP) and gross (GPP)[1] primary production of range and pasture systems in Texas, Cleveland, and McCurtain Counties.

	Range				Pasture			
	NPP t/ha	NPP 10^6 kcal/ha	GPP t/ha	GPP 10^6 kcal/ha	NPP t/ha	NPP 10^6 kcal/ha	GPP t/ha	GPP 10^6 kcal/ha
Texas	2.84	11.928	7.47	31.389	14.39	60.44	28.78	120.442
Cleveland	5.61	23.562	14.02	58.905	8.30	34.87	16.61	69.746
McCurtain	8.87	37.254	21.11	88.165	10.66	44.77	21.32	89.554

[1]GPP values for rangeland were obtained from Eck, et al. (1975); Sims and Singh (1971); and Risser (personal communication). GPP of pasture species was assumed to be twice that of NPP based on the data for rangeland and agricultural crops. Texas rangeland NPP = 38% GPP; therefore NPP in fuel equivalents = NPP kcal x .05 $\div \frac{\text{NPP}}{\text{GPP}}$ = NPP kcal x .132 or $\frac{\text{NPP kcal}}{7.6}$ = FE. Cleveland = $\frac{\text{NPP kcal}}{8}$; McCurtain $\frac{\text{NPP kcal}}{8.4}$. All pasture FE = $\frac{\text{NPP kcal}}{10}$.

cattle and cows and some milk cows and horses. Table 16 lists the quantity of livestock within each of the study counties.

Forage consumption by livestock is dependent on vegetational species composition, distribution and palability, as well as time of year, and animal age, type and quantity. It follows that although two grazing systems may have the same annual net production, they can have distinctly different animal unit months [AUM = the amount of feed/forage required to maintain one mature cow (454 kg) or the equivalent for one month]. For this study an AUM is considered to be 1.15 x 10^6 kcal (9 kg/day dry matter intake) based on data extracted from Garret (1974) and Heath, et al. (1973). The greatest majority of grazers in the counties are beef cattle and cows. Therefore, values listed for "grazeable energy" (Table 17) reflect that amount of energy typically consumed by cattle under a moderate grazing scheme. Values for the natural rangelands came from Harlan (1960), Rice, et al. (1971), and Dyck and Bement (1971), while pasture values came from Garret (1974), Fawcett (1975), Williams (1975), and Okla. St. Univ. (1975). Energy balance data for grazing cattle were obtained from Rice, et al. (1971); Hyder, et al. (1970); Wilson and Burns (1973); Barrick and Dobson (1973); Garret (1974); and Dean, et al. (1975). Approximately 54 percent of the intaken forage is lost through fecal, urinary and methane output and 2 percent is lost in metabolic heat production leaving 6 percent being converted to biomass. However, a 10 percent figure was used for biomass conversion because of supplemental feedings experienced by the cattle.

Table 16. Numbers of livestock within each of the three study counties (as of January 1, 1975).

	All Cattle and Calves	Beef Cows	Milk Cows	All Sheep and Lamb	All Hogs and Pigs	All Horses and Mules
Texas	277,000	25,700	500	550	4,800	2,500
Cleveland	32,000	14,000	1,700	700	3,200	5,600
McCurtain	61,000	33,800	600	350	600	5,300
State Total	6,020,000	237,900	126,000	104,000	315,000	230,000

Table 17. Average available energy grazed by cattle under moderate stocking on rangeland and pastures and average weight gain per hectare in Texas, Cleveland, and McCurtain Counties.

		— per ha/yr —	
County		Range	Pasture
Texas	Available Energy - 10^6 kcal	1.03	28.21
	Animal Unit Months[1]	0.86	24.50
	Average Weight Gain	47	1185
Cleveland	Available Energy - 10^6 kcal	3.39	15.82
	Animal Unit Months	2.94	13.80
	Average Weight Gain	178	665
McCurtain	Available Energy - 10^6 kcal	4.17	20.39
	Animal Unit Months	3.63	17.70
	Average Weight Gain	208	856

[1]AUM = $\approx 1.15 \times 10^6$ kcal.

The average available energy taken in by cattle under a moderate stocking strategy is listed in Table 17. Corresponding AUMs fall within the ranges of those reported in the literature for the respective counties. It should be noted that although a hectare of land may support 12 AUM, this does not mean that it can support one head of beef for a 12 month period, because of the non-growing season of the vegetation. Thus, a hectare of land supporting 12 AUM probably supports one and one third cattle for eight months. Therefore, supplemental feeding is necessary.

The total beef output in terms of fuel equivalents per hectare for all the systems are listed in Figs. 20-22. The yield in pounds of beef per hectare are listed in Table 17. As would be expected the yields of beef were highly correlated with aboveground NPP of the range and pasture systems.

Comparative Efficiencies

Table 18 illustrates the efficiency of beef production from the pasture and range systems. One can see that, including both the land and cattle maintenance energy costs, the output/input ratios between the counties shows no appreciable difference for range systems. This suggests that there exists a baseline conversion efficiency for beef production of approximately 7.4 units of fossil fuel expenditures for every one unit of beef produced (FE) compared to an average of 1.6 for agricultural production. When accounting for the dressing percentage of beef the ratio is 15 to 1. (National Academy of Sciences 1975)

Table 18. Comparison of beef output[1] to energy subsidization input[1] in Texas, Cleveland, and McCurtain Counties in Oklahoma.

	Texas		Cleveland		McCurtain	
	Range	Pasture	Range	Pasture	Range	Pasture
$\frac{\text{Beef Output}_{fe}}{\text{Beef Maintenance}_{fe}}$	0.197	0.107	0.148	0.118	0.142	0.146
$\frac{\text{Beef Output}_{fe}}{\text{Beef and Grazing Land Maintenance}_{fe}}$	0.138	0.012	0.133	0.046	0.132	0.075

[1]Output and input are in terms of fuel equivalents.

When comparing the output (Figs. 20-22, Table 17) to the efficiency of production (Table 18) it appears that the higher the output is the lower the efficiency. This is further exemplified in Fig. 23 where output is plotted against efficiency. In this plot output is significantly negatively correlated with efficiency ($r^2 = 0.90$; $p > 0.01$). The intercept of the regression equation is 0.148, which perhaps indicates the maximum possible efficiency of beef production in Oklahoma employing a fuel-based system. This indicates that it requires 6.75 kcal FE of input to get 1 kcal FE of beef output. In Texas County the value for pastureland was 83:1. The pasture ratios again show why pastureland is of note in both Cleveland and McCurtain Counties (25 and 23 percent of their area, respectively) and almost non-existent in Texas County.

Forest Systems

The discussion of forest systems of the three counties differs from the preceding land-use systems in that, first of all, Texas County contains no forest. Secondly, Cleveland County, although 23 percent of its surface area is covered by forest, none of it has commercial potential aside from firewood and posts. And thirdly, McCurtain County has 68 percent of its land in commercial forest (332,300 ha). Commercial forest land is land that is producing or is capable of producing crops of industrial wood and not withdrawn from timber utilization. Cleveland County's forest is primarily blackjack-post oak with some lowland forest of elm, hackberry, and green ash. McCurtain County has five major forest types: oak-hickory (96194 ha), oak-pine (80891 ha), loblolly-

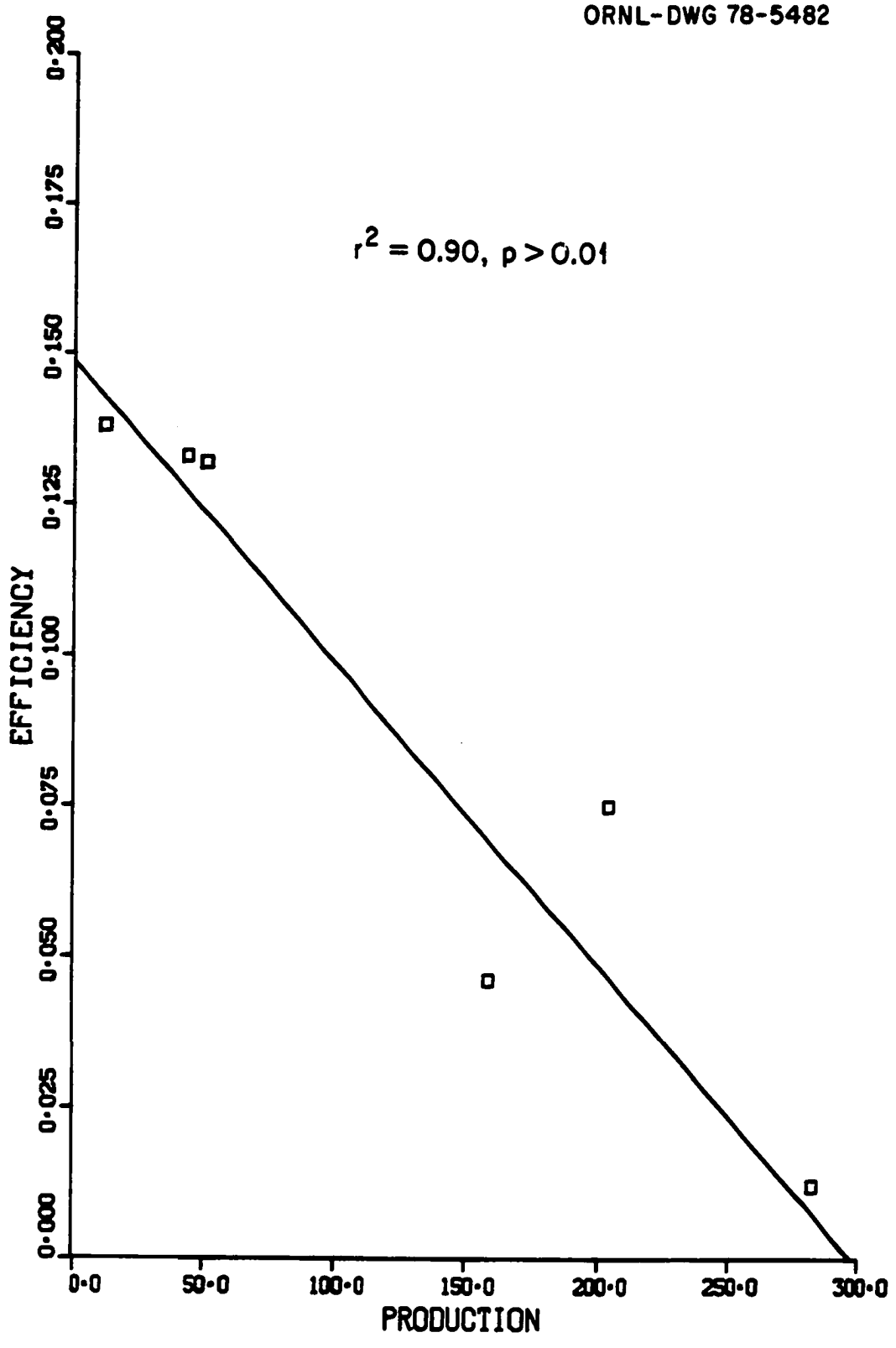

Figure 23. Comparison of beef production (in kcal fuel equivalents) to efficiency (output/input) in pasture and range systems in Texas, Cleveland and McCurtain Counties, Oklahoma.

shortleaf pine (128988 ha), floodplain forest (elm, ash, cottonwood, sycamore) (2186 ha) and oak-gum-cypress (24049 ha) (Earles 1976). The ownership of the forest lands are divided with 17,100 ha in National Forest; 17,500 ha in other public ownership; 229,500 ha owned by the forest industry; 23,200 ha on farms and 44,900 in miscellaneous private ownership. Weyerhauser Company is the predominant forest industry in the county. Since forest land is the main land-use type and the production of forest products is the principal economic driving force in McCurtain County, the following discussion will deal only with that county. This is not to say that the forest land use in Cleveland County is not an important aspect of that county, only that it was felt that more could be obtained from dealing with McCurtain County in depth.

Forest System Models

Two models were used to describe the forest systems in McCurtain County. The first model (Fig. 24) was used to describe the forest land-use systems in the county. The second model (Fig. 25) was employed to describe the entire forest industry within the county. The basis for Fig. 24 is that forest land (oak-pine, oak hickory) is cut over and harvested and then a decision must be made as to let it regrow into hardwoods again or to convert it to pine plantation. The energy flows and storages are all given in the notes accompanying the figure, with a description of the methodology and references given in Appendix A.

The model in Fig. 25 is a model of the entire county's forest resources and the interactions with the forest industry. Included in

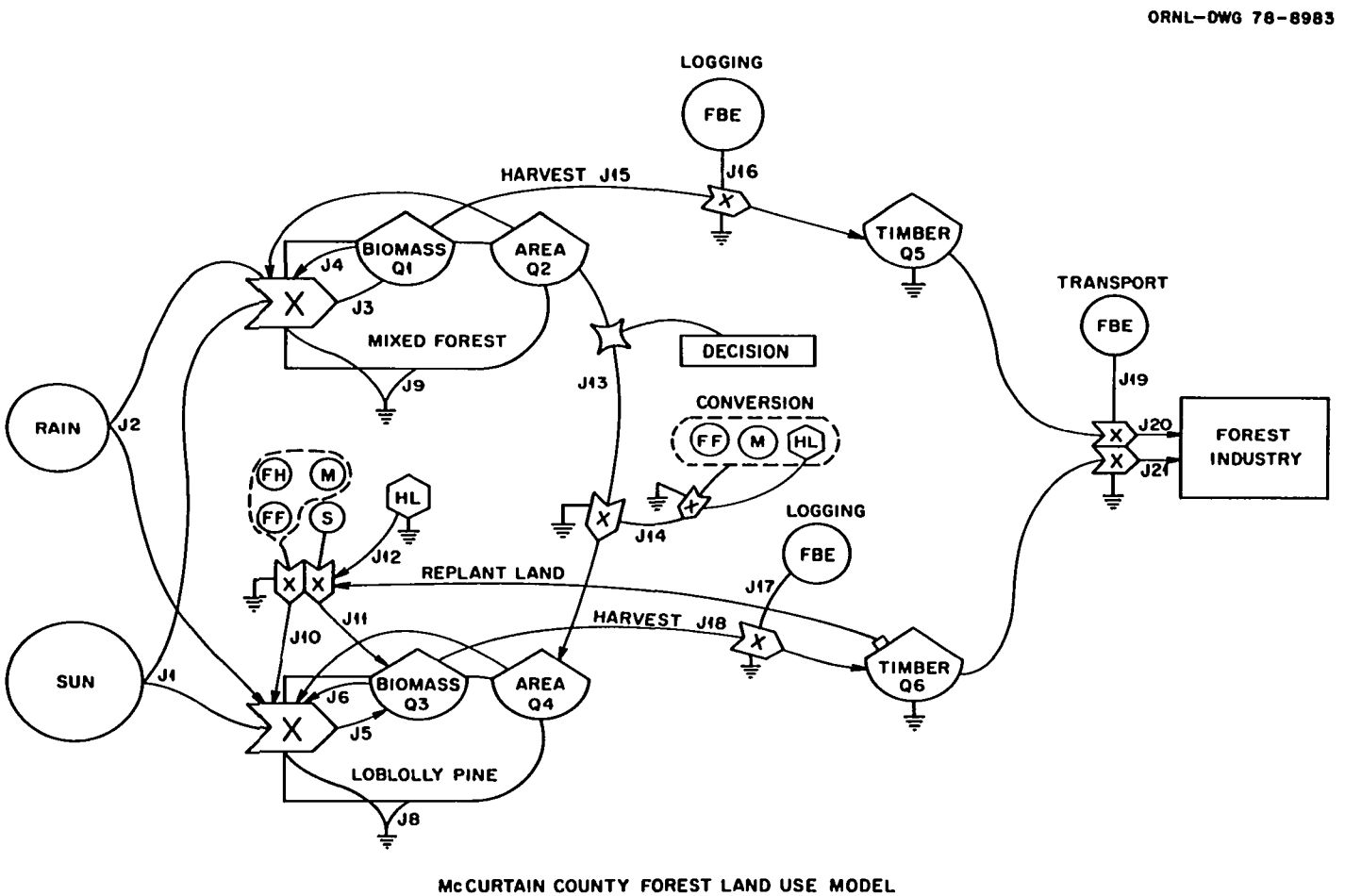

Figure 24. Energy flow model of McCurtain County forest land use. HL — human labor; FH — fertilizer and herbicides; M — machinery; FF — fossil fuel; S — seedlings; FBE — fuel-based energy.

Notes to Figure 24

Diagram Notation	Description	Value
Storages		
Q_1	Biomass of mixed forest	22.5×10^6 kcal FE/ha
Q_2	Forested land (non-pine)	203,300 ha
Q_3	Biomass loblolly pine plantation	35.0×10^6 kcal FE/ha
Q_4	Forested area - pine plantation	129,000 ha
Q_5	Timber harvested from mixed forest	7956×10^3 kcal FE/ha
Q_6	Timber harvested from loblolly pine plantation	16750×10^3 kcal FE/ha
Flows		10^3 kcal FE/ha/yr
J_1	Solar radiation	7300
J_2	Precipitation	4395
J_3	Gross primary production	5855
J_4	Unharvested biomass, litterfall	12374*
J_5	Gross primary production	6275

Notes to Figure 24 (continued)

Diagram Notation	Description	Value
J_6	Unharvested biomass, litterfall	18250*
J_7	Conversion of forested land to non-forest use	N/A
J_8	Respiration	3215
J_9	Respiration	2195
J_{10}	Fossil fuel, fertilizer, herbicides, machinery	2031*
J_{11}	Seedlings	430*
J_{12}	Human labor	104*
J_{13}	Conversion of various forest types to pine plantations	N/A
J_{14}	Fuel, machinery and labor cost for conversion	8136*
J_{15}	Harvest from mixed forest	7956*
$J_{16,17}$	Logging expenditures	4440
J_{18}	Harvest from loblolly pine plantation	16750*

Notes to Figure 24 (continued)

Diagram Notation	Description	Value
J_{19}	Transportation costs	2111*
J_{20}	Timber from mixed forest	7956*
J_{21}	Timber from loblolly pine plantation	16750*

*Energy flows reflect the energy flows per hectare of logged land which is not on a yearly basis. For mixed forest it would be once every 40-50 years, for loblolly pine plantations it would be once every 25-30 years.

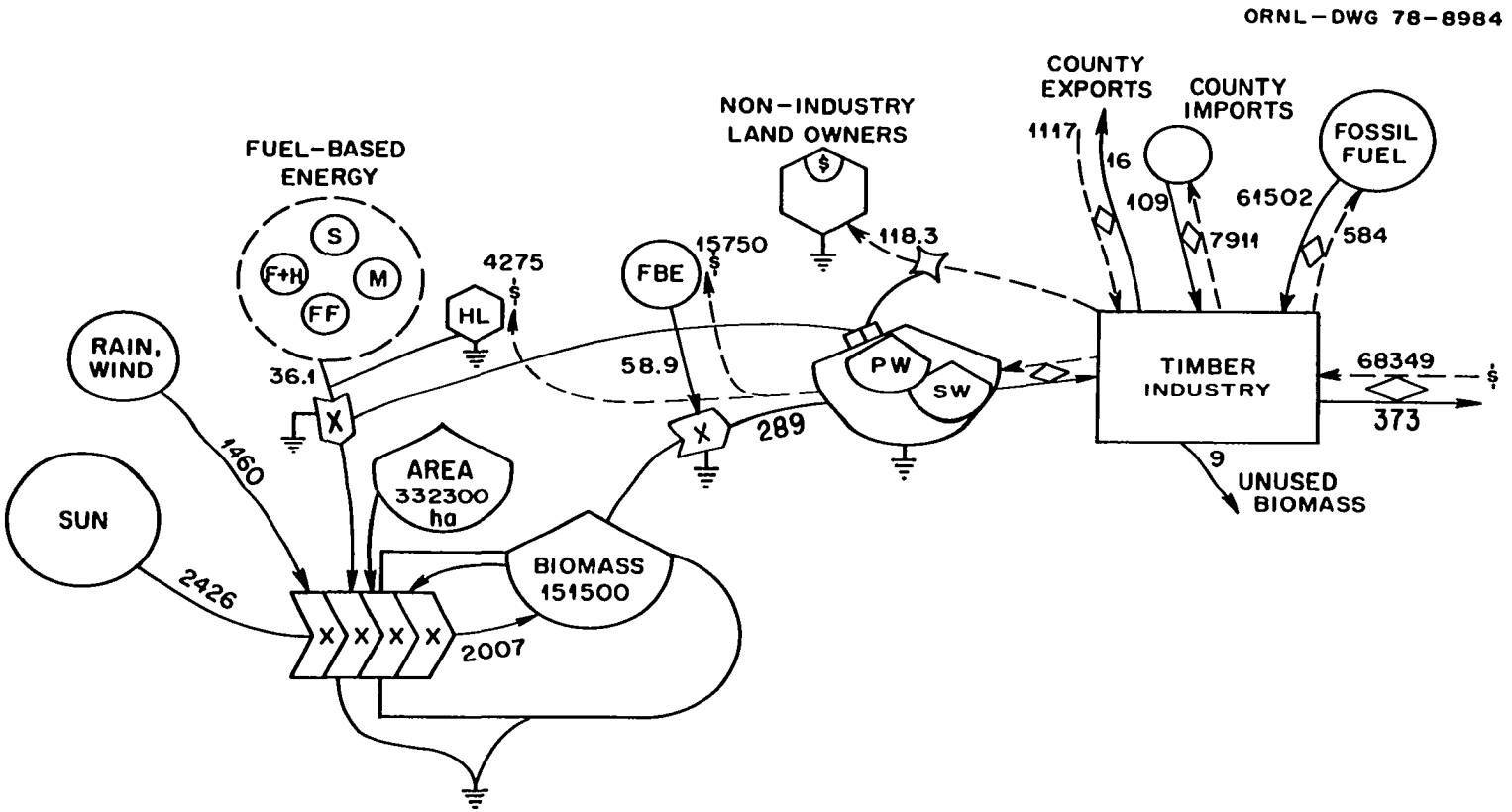

Figure 25. Energy flow model of the timber industry in McCurtain County. HL — human labor; S — seedlings; FH — fertilizer and herbicides; M — machinery; FF — fossil fuel; FBE — fuel-based energy; PW — polewood; SW — sawtimber.

the figure are flows of money as well as energy. Both models will be discussed in detail in the following pages.

Forest System Subsidies

There are no energy subsidies required for the natural forest system prior to harvest except for timber cruising and marking trees for harvest. On the other hand there are significant energy subsidies required for pine plantations. These energy subsidies range from 8136 x 10^3 kcal FE/ha for the conversion of land to pine plantation to 2565 x 10^3 kcal FE/ha for the maintenance of the plantation during its 25-30 year life span (Fig. 24). The cost breakdown, both in terms of energy and dollars, for the maintenance activities is given in Table 19.

The costs of harvest or logging were assumed to be equal for both types of forest systems. The total costs of logging was estimated to be 4.441 x 10^3 kcal FE/ha (DeBell and Harms 1976, Bishop 1976). Table 20 lists the expenditures associated with the logging of hardwoods and softwoods. Transportation costs (2111 x 10^3 kcal FE/ha) were based on figures in DeBell and Harms (1976) which were based on a hauling radius of 45 miles.

Forest System Output

Total Production. Johnson and Risser (1974) reported an annual NPP for a blackjack-post oak forest in Cleveland County of 14.9 t/ha. This value was felt to be high for the majority of the crosstimber area within the county for three reasons. 1) The stand sampled had more favorable moisture conditions than the majority of

Table 19. 1974 dollar and energy costs for maintaining pine plantations in the Piedmont area of the South (including southeastern Oklahoma). Adapted from Monk and Kucera (1975).

Activity	Costs per hectare					
	Labor		Equipment		Materials	
	$	kcal FE[1]	$	kcal FE[2]	Amount	kcal FE
Prescribed burning	6.18	3296	3.01	32087		
Mechanical site preparation	39.10	20853	78.60	837876		
Planting by machine	30.75	16400	20.95	223327		
(Planting by hand)	(53.40)	28480	(5.34)	(56924)		
Fertilization	0.7 hr[3]	1400	12.00	127915	200 lbs[3]	802164[4]
Precommercial thinning	38.11	20325	25.89	275987		
Herbiciding unwanted growth	34.63	18469	5.68	60549	4 lbs	4400[4]
Timber cruising	2.35	1253	0.35	3731		
Marking trees for harvest	23.30	12427	3.14	33472		

Table 19 (continued)

Activity	Costs per hectare					
	Labor		Equipment		Materials	
	$	kcal FE[1]	$	kcal FE[2]	Amount	kcal FE
Seedbed preparation	23.02	12277	52.91	564021		
Total	195.45	104240	190.51	2030837	—	806564
(planting by hand)	(222.08)	(118443)	(174.90)	(1864434)		

[1]Fuel equivalents for labor were determined by dividing the dollar cost by the average wage of an Oklahoma worker of $3.75/hr (Center. Econ. Mgmt. Res. 1975) and multiplying the hourly work by 2000 kcal FE (Table 4).

[2]Energy expenditures for equipment costs were determined by averaging the input/output energy coefficients from Herendeen and Bullard (1974) for truck bodies (77144 Btu's), construction machinery (68040 Btu's), transportation equipment (96302 Btu's) and farm machinery (71846 Btu's). Average was 78333 Btu's or 19740 kcal FE per 1967 dollar.

[3]Fertilizer requirement of 200 kg/ha of 18-46-0 fertilizer (G. Bledsoe, personal communication).

[4]Table 4.

Table 20. Energy expenditures for logging operations.[1]

	Hardwoods				Softwoods			
	sawtimber-mbf		pulpwood-ccf[2]		sawtimber-mbf		pulpwood-ccf[2]	
	gal.	kcal FE	gal.	kcal FE	gal.	kcal FE	gal.	kcal FE
Gasoline[3]	3.58	111,868	1.90	59,431	3.58	111,868	1.94	60,772
Diesel Fuel[3]	3.70	130,536	1.97	69,445	3.70	130,536	2.01	71,011
Oil[3]	0.18	6,350	0.09	3,285	0.18	6,350	0.10	3,354
Labor[4]	hours	kcal FE	hours	kcal FE	hours	kcal FE	hours	kcal FE
	5.07	10,140	4.44	8,884	2.65	5,295	3.16	6,066
Machinery and Equipment[5]	6.798×10^6 kcal FE/ha							

[1]Adapted from Cottam, et al. (1973).

[2]Conversion of cords of wood to ccf (hundred cubic feet) taken from Snyder and Knight (1970).

[3]Kilocalorie conversions from Table 4.

[4]Man-hours of labor converted to kcal FE through use of 2000 kcal FE/hr from Table 4.

[5]Energy requirements for machinery and equipment were arrived at by subtracting energy requirements of fuel, lube and labor for a timber harvest of 1040 ft^3/A softwoods and 157 ft^3/A hardwoods from 4.4406×10^6 kcal FE/acre derived from economic logging, costs as described in DeBell and Harms (1976) and energy costs in Bishop (1976).

the county (Johnson, personal communication). 2) The stand had not yet reached steady state and therefore would tend to exhibit a higher annual NPP. 3) The allometric technique employed within the study may have yielded higher values than other techniques (Johnson, personal communication). Based on this information and that found in the literature (Whittaker and Woodwell 1969; Art and Marks 1971; Monk, et al. 1970; and Rochow 1974), a value of 8.5 mt/ha was assigned to the upland forest and 10 mt/ha to the lowland forest. Annual GPP was estimated at 19.8 and 23.2 mt/ha, respectively, based on data of Johnson and Risser (1974) and calculations detailed in Whittaker and Marks (1975).

The estimated values for the NPP and GPP of the five forest types in McCurtain County are listed in Table 21. There exists one noticeable point in Table 21. That is the difference between NPP and GPP of the loblolly pine (plantation) as compared to the natural occurring forest types. The loblolly pines respiration was only 35 percent of the GPP, whereas it was 55 percent for the other forest types. This is indicative of the specialized genetic breeding of this species and the maintenance costs (respiration) contributed by man's management activities.

Harvestable Output. While the NPP and GPP yield an indication of the forest system's response to natural factors, or they afford an estimation of the contribution of primary production to the ecosystem, they fail to account for the harvestable portion of the biomass that is utilizable by man. This is further complicated since that not only are different sites capable of producing different quantities of biomass, but the usable portion of the biomass is related to species

Table 21. Estimated annual net (NPP) and gross (GPP) primary productivity for forest types in McCurtain County.

Type	County Area	NPP	GPP	NPP	GPP
	10^3 ha	mt/ha/yr		10^6 kcal/ha/yr	
Oak-Hickory	96	10.5	23.3	49.4	109.5
Oak-Pine	81	11.0	24.4	52.8	117.1
Loblolly (loblolly, shortleaf)	129	16.0	24.6	81.6	125.5
Floodplain (elm, ash, cottonwood, sycamore)	2	14.0	31.1	64.4	143.1
Cypress (oak, gum, cypress)	24	14.0	31.1	68.6	152.4

Data on NPP + GPP from Johnson and Risser (1974); Klopatek and Risser (1977); Kira (1975); Nemeth (1973); Art and Marks (1971); Rockow (1974); Monk, et al. (1970), Whittaker and Marks (1975); and Whittaker and Woodwell (1969). Caloric values derived from Cottam, et al. (1973); Jordan (1971); Nemeth (1973); and Cummins and Wuycheck (1971).

type, composition and age. To deal with this problem, the annual total county timber production or removals were divided by the estimated annual harvested acreage in the county. According to local sources, approximately 12,000-14,000 ha (30,000-35,000 A) were harvested in McCurtain County during 1975. This number is furthermore expected to remain fairly consistent. However, as time progresses the harvested output should be more and more dominated by loblolly pine and less by the pine-hardwoods mix characteristic of current production.

Listed in Table 22 are the growing-stock and sawtimber volume, net growth of growing stock and sawtimber, and timber removals of growing stock and sawtimber. Using the lower harvested area figure (12,150 ha ≈ 30,000 A) I arrived at values of 1040 ft^3 of softwood and 160 ft^3 hardwood per acre or a total of 7956 x 10^3 kcal FE/ha. These figures were then converted to total standing crop and inserted in the model in Fig. 24 for the harvested output from a mixed forest. The conversion technique is explained in Table 23 where values of 60.5 mt/ha of softwoods and 16.3 mt/ha of hardwoods were present in the harvested acreage. The total stand biomass of 91.9 mt/ha agrees with results found in the literature for similar forests.

The harvested output from the loblolly pine plantations provided a problem, since no data was available from McCurtain County. Therefore, values were obtained from the literature to estimate what the output in terms of biomass was. Data from Nemeth (1973), Art and Marks (1971) and Brender (1973) indicated that the biomass per hectare was approximately 140 mt of which approximately 65 percent is harvested (Bradburn, personal communication) as opposed to hardwoods where

Table 22. Growing-stock and sawtimber volume, net growth of growing stock and sawtimber, and growing-stock and sawtimber timber removals in 1975 on commercial forests of McCurtain County, Oklahoma. Adapted from Earles (1976).

	All	Softwood			Hardwood			
	Species	Total	Pine	Other	Total	Oak	Gum	Other
			– X10^6 feet^3 –					
Growing stock volume	653.2	400.3	399.0	1.3	252.9	162.5	23.7	66.7
Net growth of growing stock	32.3	19.5	19.5	——	12.8	7.8	1.2	3.8
Timber removals of growing stock	35.8	31.1	31.0	0.1	4.7	2.8	0.7	1.2
			– X10^6 board feet –					
Sawtimber volume	2,280.3	1,618.2	1,610.8	7.4	662.1	440.0	75.8	146.3
Net growth of sawtimber	141.1	102.8	102.7	0.1	38.3	27.2	5.2	5.4
Timber removals of sawtimber	172.3	154.5	154.1	0.4	10.1	5.8	0.8	3.5

Table 23. Conversion methods for converting cubic feet of harvested timber into the standing crop of biomass.

softwood	yield per acre	1040 ft^3/A		
		x 15.3 kg/ft^3	(from DeSelm, 1971)	
		≈ 15,900 kg/A		
		x 1.54	total tree conversion figure (Bradburn, personal communication)	
		24,500 kg/A		
		x 2.47 A/ha		
		60,500 kg/ha	= 60.5 mt/ha	
hardwood	yield per acre	157 ft^3/A		
		x 21.0 kg/ft^3	(from DeSelm, 1971)	
		≈ 3300 kg/A		
		x 2	total tree conversion figure (Patric and Smith, 1975)	
		6600 kg/A		
		x 2.47 A/ha		
		16,300 kg/ha	= 16.3 mt/ha	
	rotten and dead trees		1.2 mt/ha	(Earles, 1976)
	shrubs and saplings		12.5 mt/ha	(adapted from Harris et al., 1973)
	herbaceous growth		1.4 mt/ha	(DeSelm, 1971)
		Total Stand Biomass	91.9 mt/ha	

approximately 50 percent of the total biomass is harvested (Patric and Smith 1975). This resulted in the harvested biomass being 91 mt/ha or 16,750 x 10^3 kcal FE/ha.

Comparative Efficiencies

In comparing the outputs from the two forest types, the harvestable biomass from the pine plantation (16,750 x 10^3 kcal FE/ha) obviously surpasses that from the mixed forest (7956 x 10^3 kcal FE/ha). The question is then, how do the two systems compare in their output/input efficiencies? To answer this question two approaches were taken – one without including the natural energies as input and one including the natural energies.

The energy inputs for the mixed forest are only those attributable to the logging and transport costs or a total of 6155 x 10^3 kcal FE/ha.

The inputs for the pine plantation included not only logging and tranport costs but also conversion and maintenance costs or a total of 16,856 kcal FE/ha. Dividing these figures into the output from the forest systems yields ratios of 1.29 and 0.99 for the mixed forest and pine plantation, respectively. Thus, the natural system possesses a better matching ratio with the energy subsidies.

Now if the solar energy is included – 50 years of it for the mixed forest and 30 years of it for the pine plantation – this provides new ratios. The resulting output/input ratios are 0.022 and 0.071 for mixed forest and pine plantation, respectively, or a 3:1 advantage for pine plantation. This is indicative of the ability to boost primary production output through the amplication power of energy subsidies

while still maintaining a positive output/input ratio. However, in the long run the output from the natural system is still better when comparing the subsidization energies. Furthermore, this energy analysis has not included the benefits of maintaining a mixed or natural forest such as wildlife habitat, better soils, and aesthetic resources.

Forest Industry

The forest or timber industry as depicted in Fig. 25 shows its importance within the county. Controlling almost 70 percent of the total land within the county the forest industry is the driving economic force. In fact, the income of 68 million dollars is almost 75 percent of the total personal income in the county (90 million dollars).

An indicator of the energy intensity of the industry is the energy output/dollar input ratio. The exchange ratio of 5457 kcal FE per dollar indicates the high energy quality of wood products. This ratio contrasts markedly with that of the fossil fuel (primarily natural gas) coming into the industry where the ratio is 105×10^6 kcal FE per dollar! These conflicting ratios indicate the discrepancy one may obtain by using Odum's (1973) conversion figure of 25,000 kcal FE per dollar.

Right-of-Ways

The land-use category of right-of-ways can be broken down into three subcategories: highway, railway and electric transmission lines. Right-of-ways play an integral, if not indispensable, role in the movement of energy, materials, and people into, through, and out of the

land-use systems in question. Right-of-ways, in particular highways and roadways, also occupy a significant portion of a region's land area. Data from Klopatek and Risser (1977) show that highway right-of-ways (including roadbed and easement area) account for 18,776, 5951, and 10,202 hectares of land in Texas, Cleveland and McCurtain Counties, respectively or 3.5 percent, 4.1 percent and 2.1 percent of their respective land areas. However, since railway right-of-ways only occupy a small fraction of the land area of each of the counties (235, 50, and 120 km for Texas, Cleveland and McCurtain Counties, respectively), they will not be dealt with in this discussion. Therefore, the following discussion will center on highway and electrical transmission line right-of-ways.

Right-of-Way Models

Both models in Fig. 26a and 26b are purely qualitative. This is because many of the values were unable to be determined. Both models have a number of features in common. First of all, both systems require the conversion of a natural or man-managed system to one that is completely man-dominated. The highway system is self-evident. The transmission line system may vary from one that occupies only a small fraction of the system (e.g. footings for tension poles within a pasture system) to one that completely dominates the preceding system (e.g. a transmission line right-of-way through a forest where the forest is replaced by a maintained grass-herb community). Secondly, the size of the right-of-way must be in proportion to the incoming flow (e.g. vehicular traffic or wattage). Thirdly, the primary producer component

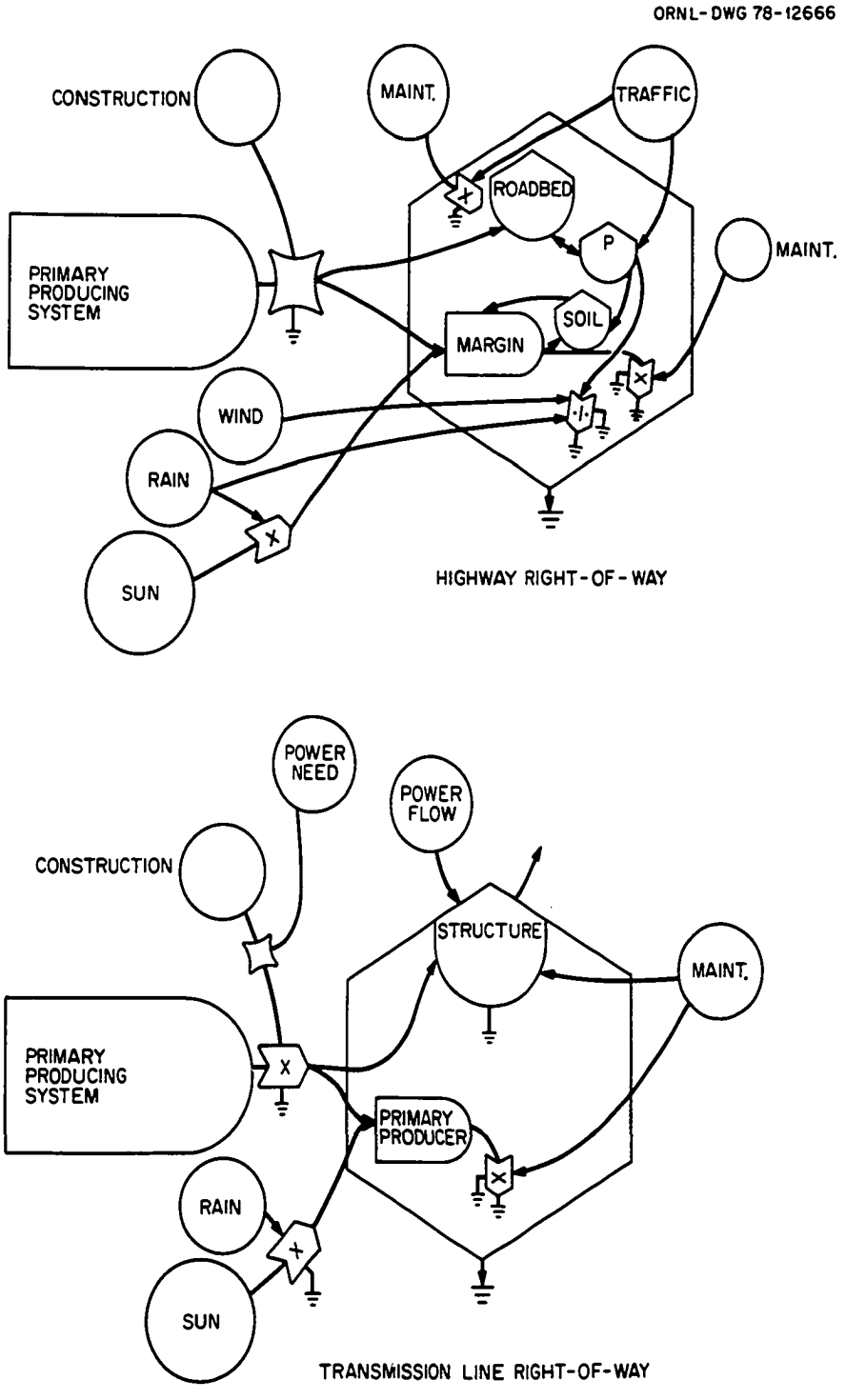

Figure 26. Qualitative energy flow models of highway and transmission line right-of-ways.

of the system must be managed by artificial means, by mowing or herbicides. And finally, the systems never build up large concentrations of energy or power but are subject to daily oscillating flows.

Highway Right-of-Ways

The land occupied by highway right-of-ways, the energy flow through the system, and the maintenance costs are all given in Table 23. Energy flows were based on the reported vehicular flow (Okla. Hwy. Dept. 1975a,b,c) and an assumed gas mileage for urban-open road driving (Table 23). From looking at the model (Fig. 26a), the highway right-of-way systems appear fairly simple. Actually they are extremely complex, especially with regard to their potential implications. They are to some extent similar to the old railways and act as a magnetizing influence for surrounding development and settlement. The additional settlement in turn adds to the power flow.

The transportation energy expenditures can be determined in two ways. The first, as in Table 24 bases the energy expenditures on measured, average vehicular traffic. The second, employs the use of county vehicular numbers as a percent of the state total and then multiplies that by the total state fuel consumption (Table 25). As can be seen in the comparison of Tables 24 and 26 the total energy expenditures are quite different. The energy flow figures (Table 24) are higher for Texas and McCurtain Counties while lower for Cleveland. The reasons for these discrepancies are dependent on the size of the county and the destination of the vehicles. Texas and McCurtain Counties are large and therefore require more driving and thus more fuel usage per

Table 24. Highway right-of-way land use,[1] energy flow[2] and energy maintenance[3] requirements in Texas, Cleveland, and McCurtain Counties in Oklahoma.

	Texas	Cleveland	McCurtain
Hectares (mi.)	18,776 (2963)	5951 (939)	10202 (1606)
Percent of county area	3.5	4.1	2.1
Annual total maintenance costs (10^9 kcal FE)	58.664	33.773	37.189
Annual average maintenance costs (10^6 kcal FE/ha)	3.124	5.675	3.645
Annual total energy flow (10^9 kcal FE)	989.505	1423.116	869.187
Annual average energy flow (10^6 kcal FE/ha)	52.700	239.139	85.198
$\frac{\text{Energy flow}}{\text{Maintenance costs}}$	16.9	30.9	23.4

[1]Includes all federal, state and county roads both paved and unpaved.

[2]Energy flow includes all energy expanded as fuel by vehicles traveling the roads within the county. Vehicles were assumed to average 12.5 mi./gal. One gallon of

Table 24 (continued)

fuel = 31248 kcal FE. Vehicular flow was obtained from statistics of the Oklahoma Highway Department (1976).

[3]Maintenance costs were based on 1974 $ values and per type of road obtained from Oklahoma Highway Department (personal communication) and converted to kcal FE from data in Herendeen and Bullard (1974); 1974 $1 = 156670 kcal FE.

Table 25. Annual amounts of liquid fuel consumed in Oklahoma 1955 to 1975 (compiled from data from the Oklahoma Public Service Commission).

	Gallons		
Year	Gasoline	Diesel	LPG
1955	902,991,875	25,201,612	424,418,287
1956	939,381,120	30,090,557	464,834,906
1957	930,408,973	38,780,582	496,551,131
1958	1,003,659,734	45,910,409	452,123,980
1959	1,076,704,862	66,155,388	510,205,729
1960	1,142,072,895	79,305,852	561,443,615
1961	1,130,642,251	90,466,901	673,433,530
1962	1,153,660,555	101,874,966	726,540,886
1963	1,179,244,264	116,043,134	777,048,015
1964	1,202,753,598	151,660,097	859,486,979
1965	1,255,499,188	196,408,522	967,224,183
1966	1,326,151,242	208,567,951	971,617,065
1967	1,352,910,939	235,931,808	979,481,874
1968	1,395,616,798	265,246,081	875,885,192
1969	1,467,908,975	291,122,667	840,793,463
1970	1,564,851,342	329,920,488	721,100,518
1971	1,602,907,928	399,850,698	957,441,624

Table 25 (continued)

Year	Gallons		
	Gasoline	Diesel	LPG
1972	1,677,459,793	443,875,787	777,740,778
1973	1,725,856,823	521,984,133	742,502,803
1974	1,657,887,011	572,895,602	720,146,093
1975	1,725,995,244	N.A.	N.A.

Table 26. Expenditures of gasoline and diesel fuel for 1974 in Texas, Cleveland and McCurtain Counties based on state expenditures. Gasoline = state total x county total automobiles/state total automobiles. Diesel fuel = state total x county total commercial trucks and tractors/state total trucks and tractors.

	Gasoline		Diesel Fuel		Total
County	gal.	10^9 kcal	gal.	10^9 kcal	10^9 kcal
Texas	11,472,578	358.5	4,669,099	164.7	523.2
Cleveland	57,615,912	1800.4	16,808,757	593.0	2393.4
McCurtain	14,589,940	456.0	6,897,663	243.3	699.3

vehicle whereas Cleveland is relatively small. Also much of Cleveland County's work force migrates with approximately 3,000 (13.6%) coming in and 11,000 (38.3%) going out daily. Only 300 (5.1%) and 750 (14.4%) migrate in and out of McCurtain County daily and 250 (3.1%) and 350 (4.3%) migrate in and out of Texas County daily.

The comparison of energy flow to maintenance cost shows Cleveland County to possess the highest and therefore the more favorable ratio. The reasons for this are one, Cleveland County has the highest population; two, it is the smallest county in size; and three, it contains a busy section of the Interstate System. However, the true ratio in judging costs and benefits must include environmental costs such as pollution from the vehicles and the cost of "carving up" the ecosystems.

Transmission Line Right-of-Ways

Judging from the many reports that have recently been published, there exists substantial environmental concerns over transmission line right-of-ways (Tillman 1976; Fowler, et al. 1977; Daily 1978). Furthermore, quite often the local environment suffers degradation due to external factors, e.g. the need of large cities for electrical power from power sources which are many kilometers distance. For example, the counties' total consumption (Table 27) was divided by the capacity of the transmission lines times the length of the appropriate lines (Table 28) to arrive at a consumption-construction figure (mwh/kv-km). The resultant figures were 1.24, 9.97, and 2.85 mwh/kv-km for Texas, Cleveland and McCurtain Counties, respectively. This points out that

Table 27. Electrical power generation and consumption statistics for Texas, Cleveland, and McCurtain Counties, Oklahoma – 1974.

	Texas		Cleveland		McCurtain	
	MWH	10^6 kcal FE[1]	MWH	10^6 kcal FE[1]	MWH	10^6 kcal FE[1]
Consumption (Total Sales)	186,239	622,453	386,000	1,290,094	146,000	250,881
Loss	26,412[2]	88,275	36,863[3]	123,204	13,943[3]	23,959
Generated	28,946	96,744	—	—	114,000	195,894
Net Use	183,706	613,987	349,137	1,166,895	45,943	78,947

[1]For conversion of megawatt hours (MWH) to kcal FE a conversion figure of 3.89 kcal FE for every kcal of electricity was used (obtained from Herendeen and Bullard 1974) except for that generated within McCurtain County. Since McCurtain County's electrical generation came from hydro facilities instead of fossil fuel a conversion figure of 2 kcal FE per kcal of electricity was used (Perry, et al. 1977).

[2]Actual loss figure obtained from the Southwestern Public Service Company, Amarillo, Texas.

[3]Loss figures based on the national average of 9.55% (Kidman, et al. 1977).

Table 28. Amount and capacity of electric transmission lines[1] in Texas, Cleveland, and McCurtain Counties, Oklahoma.

	Lengths in Kilometers		
Capacity KV	Texas	Cleveland	McCurtain
6.9			6.4
12.5		48.3	16.1
33	462.3		25.7
69	405.4	160.3	9.7
115	933.3		
138		149.7	136.8
345		18.5	88.5

[1]Figures do not include primary distribution lines within the urbanized land areas.

local consumption is not the primary force in implementation or presence of transmission lines. Consumption in Texas, Cleveland, and McCurtain Counties was 35.4, 12.6 and 7.2 x 10^6 kcal FE per person, respectively. The reason for Texas County's substantially larger use per capita was based on the heavy electrical usage for feedlot operations and for supplying power to irrigation pumps. The lower figure for McCurtain County is a function of the hydropower generated within its boundaries. Electricity consumption was 22.8, 22.0 and 13.8 percent of the respective counties' total energy consumption (Drysdale and Calef 1976).

Land Use

A discussion of the energetics of land use is not complete without a discussion of the land-use patterns within the counties. Figures 27, 28 and 29 depict the land use in all three counties while Table 29 gives a numerical breakdown. As can be seen in the figures and the table the land use is actually a manifestation of the climate. In McCurtain County, with abundant moisture, forest land predominates. In Cleveland County the forest-range (prairie) transition is obvious. And in Texas County, with precipitation being scarce, rangeland is the predominant natural land type. It is important to notice how much of Texas County's land is in cropland (58.8%) with 19.2 percent under irrigation.

The mix or proportionment of land-use classes within a county is extremely important. For, as discussed in the introduction, a balance needs to be maintained between the natural systems and the managed land-use systems (Klopatek 1978). It is the balancing of these

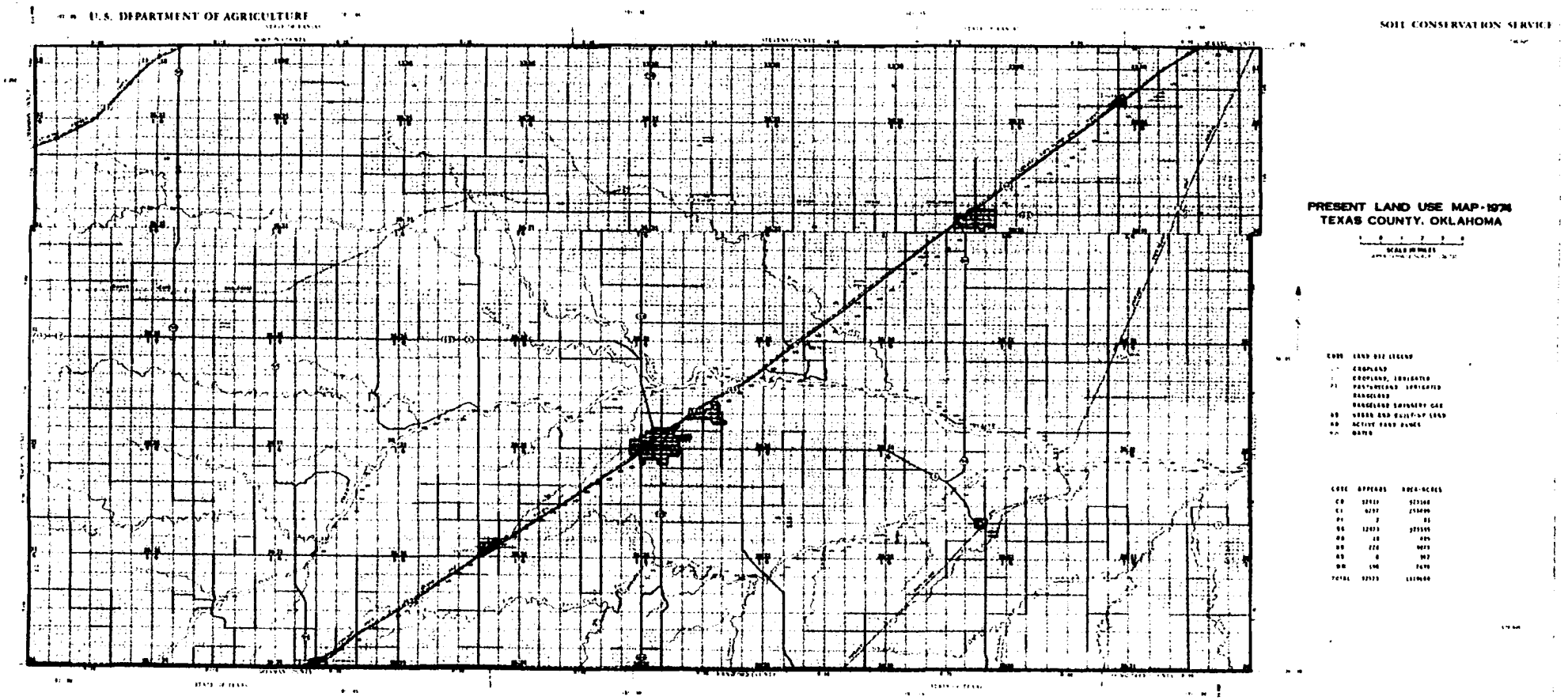
U.S. DEPARTMENT OF AGRICULTURE
SOIL CONSERVATION SERVICE
PRESENT LAND USE MAP-1974
TEXAS COUNTY, OKLAHOMA

Figure 27

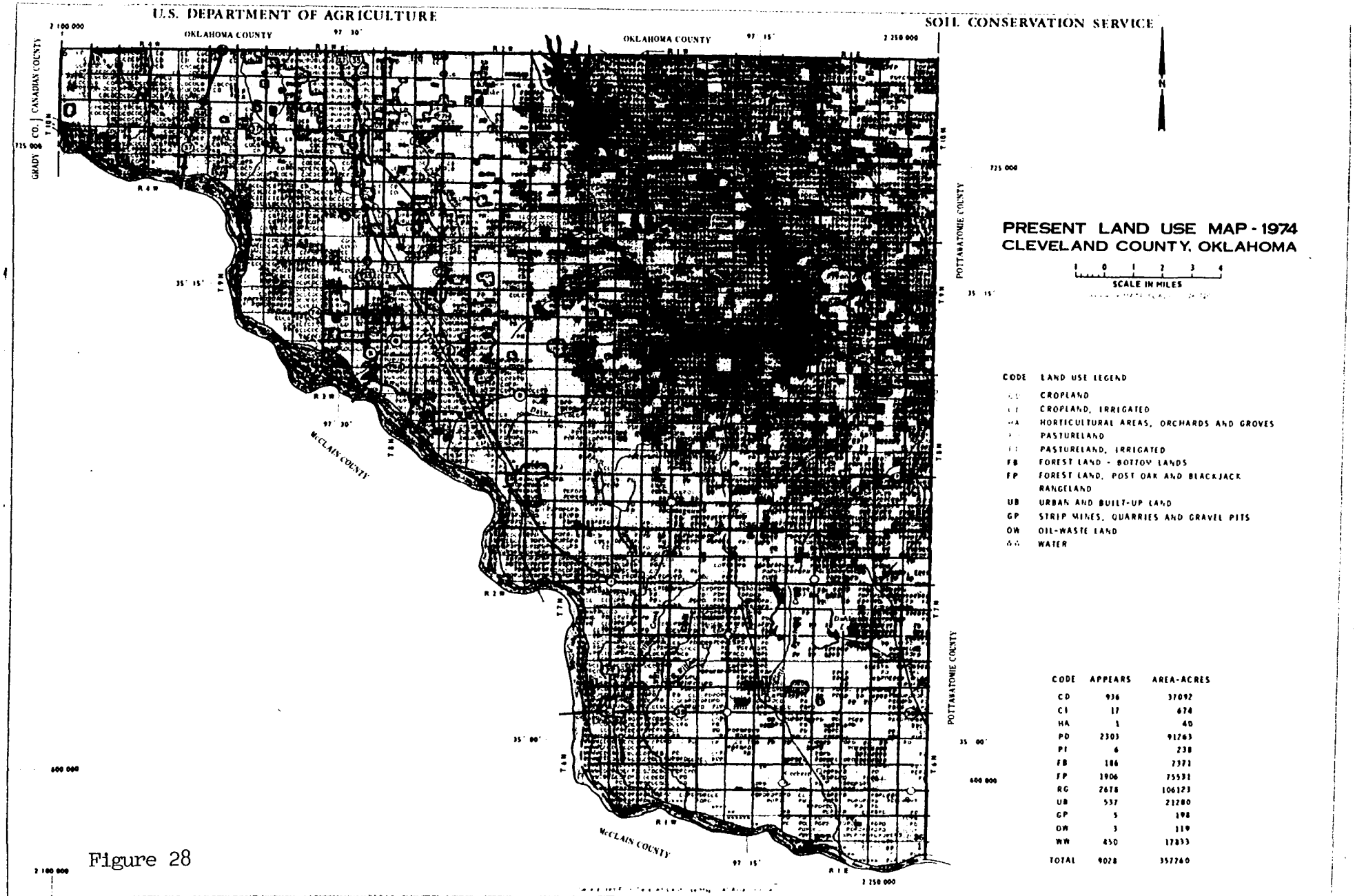
U.S. DEPARTMENT OF AGRICULTURE
SOIL CONSERVATION SERVICE
OKLAHOMA COUNTY
OKLAHOMA COUNTY
GRADY CO.
CANADIAN COUNTY
POTTAWATOMIE COUNTY
POTTAWATOMIE COUNTY
McCLAIN COUNTY
McCLAIN COUNTY
PRESENT LAND USE MAP - 1974
CLEVELAND COUNTY, OKLAHOMA
SCALE IN MILES
CODE LAND USE LEGEND
CD CROPLAND
CI CROPLAND, IRRIGATED
HA HORTICULTURAL AREAS, ORCHARDS AND GROVES
PD PASTURELAND
PI PASTURELAND, IRRIGATED
FB FOREST LAND - BOTTOM LANDS
FP FOREST LAND, POST OAK AND BLACKJACK
RG RANGELAND
UB URBAN AND BUILT-UP LAND
GP STRIP MINES, QUARRIES AND GRAVEL PITS
OW OIL-WASTE LAND
WW WATER
CODE APPEARS AREA-ACRES
CD 936 37092
CI 17 674
HA 1 40
PD 2303 91263
PI 6 238
FB 186 7371
FP 1906 75531
RG 2678 106123
UB 537 21280
GP 5 198
OW 3 119
WW 450 17833
TOTAL 9028 357760
FEB 1972
4-R-26132-A

Figure 28

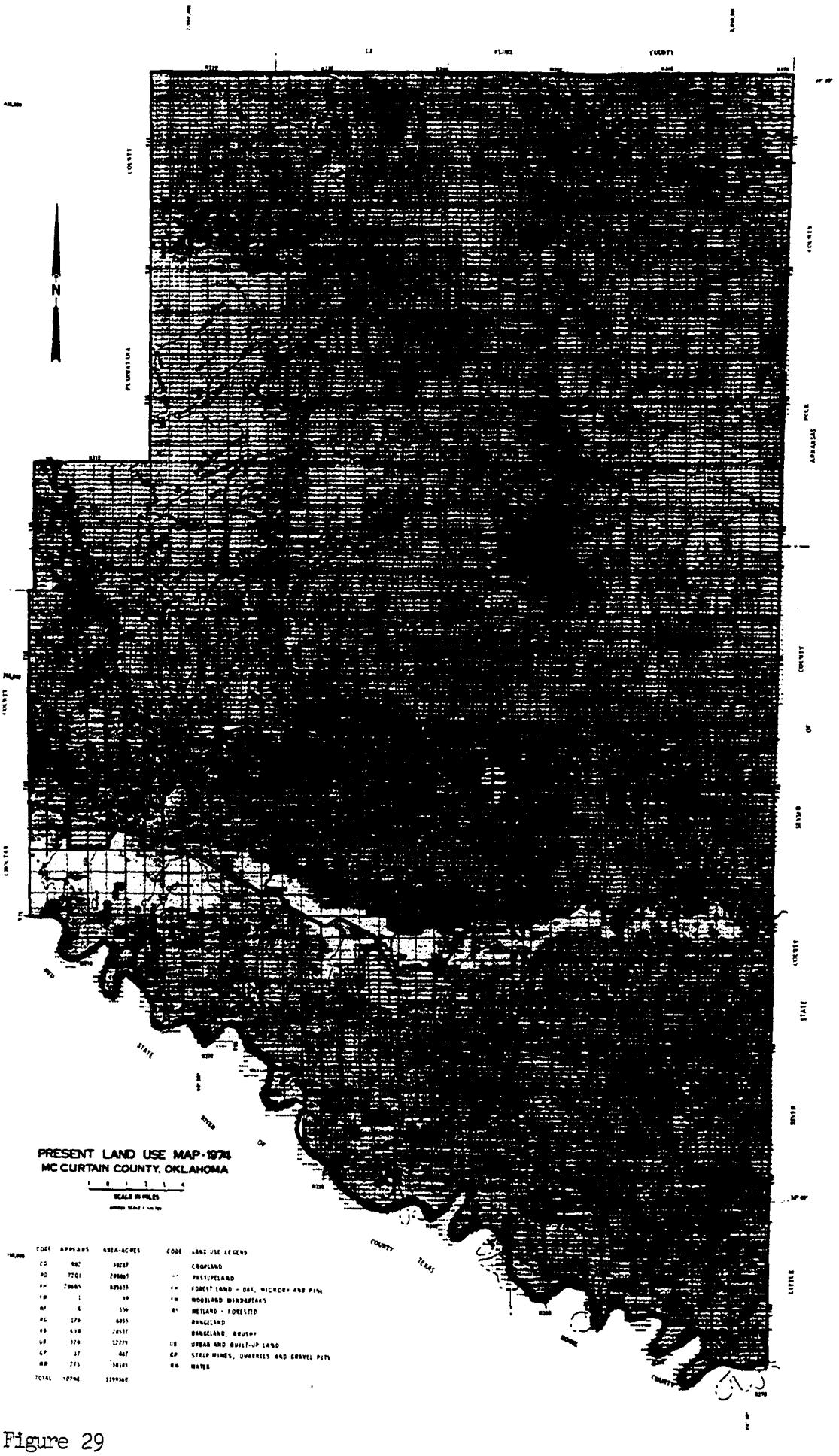
N
PRESENT LAND USE MAP-1974
MC CURTAIN COUNTY, OKLAHOMA
SCALE IN MILES
CODE
LAND USE LEGEND
CROPLAND
PASTURELAND
FOREST LAND - OAK, HICKORY AND PINE
WOODLAND WINDBREAKS
WETLAND - FORESTED
RANGELAND
RANGELAND, BRUSHY
URBAN AND BUILT-UP LAND
STRIP MINES, QUARRIES AND GRAVEL PITS
WATER
TOTAL

Figure 29

Table 29. Land use in Texas, Cleveland, and McCurtain Counties, Oklahoma, in 1974.

	Texas		Cleveland		McCurtain	
Land-use Type	hectares	percent	hectares	percent	hectares	percent
Cropland	211,807	39.6	15,033	10.4	15,485	3.2
Cropland-irrigated	102,631	19.2	273	0.2	0	0
Pasture	0	0	36,944	25.5	113,548	23.4
Pasture-irrigated	33	0.1	0	0	0	0
Rangeland	212,955	39.9	42,965	29.7	12,709	2.6
Forest	0	0	33,564	23.2	326,436	67.2
Water	3,117	0.6	7,220	5.0	12,221	2.5
Urban-buildup	3,674	0.7	8,744	6.0	5,172	1.0
Total	534,217	100.0	144,747	100.0	485,571	100.0

systems which in turn dictates the ratio of subsidized to natural energies. It is this ratio, or as defined by Odum and Odum (1976) the investment ratio, which is the deciding factor as to the survival of the overall (county) system according to the maximum power principle. While it is not possible at this time to evaluate or compare the counties because the major fossil fuel supported system, urban land use, has not been evaluated, some observations can still be made. These will be discussed in the following pages.

Agricultural Land

Figure 30 depicts the change of agricultural or cropland in the three counties from 1970 to 1975. The percentage of Texas County's land base in cropland has remained consistent over the last thirty years. However, irrigated cropland has jumped from a few hundred hectares in the early fifties to over 100,000 at present. This has resulted in a substantial decline in water levels in the Ogallala groundwater formation [as much as 25 m from 1956-1974 (Okla. Water Res. Board 1975)]. Furthermore, by the year 2030 water requirements for irrigation are expected to more than double the existing ones. This represents a reduction in saturated thickness of the formation and loss of groundwater in storage. The results are a decrease in rate at which pumps will deliver water, higher energy costs and possible water quality problems from saline encroachment. Eventually, pumping of wells will become financially infeasible, which they are presently on an energy basis for certain feed crops.

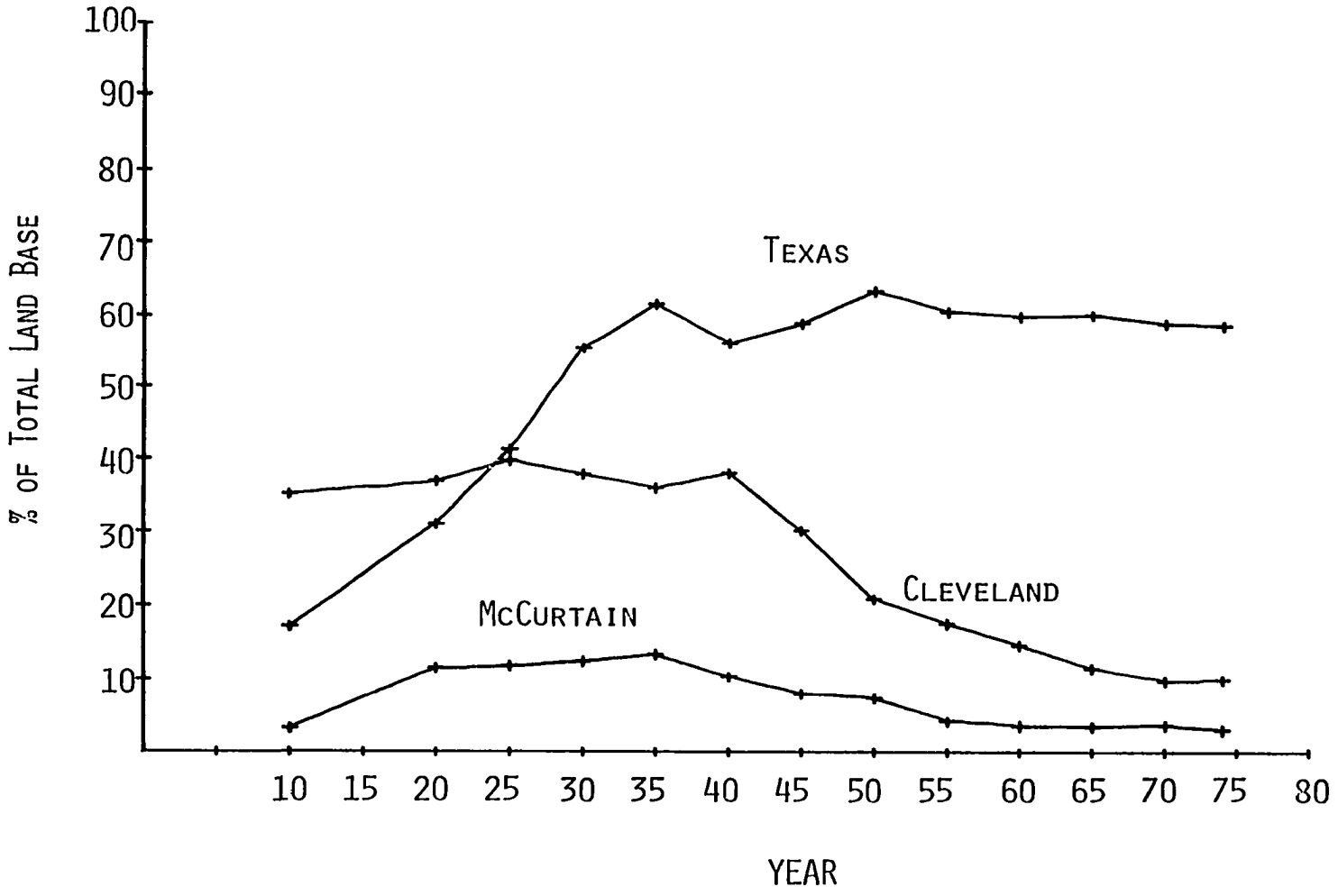

Figure 30. Historical trend of land devoted to cropland in Texas, Cleveland and McCurtain Counties, Oklahoma.

Cleveland County has shown a decline of almost 300 percent in the amount of crop land over the last 35 years (Fig. 30). This decline can be expected to continue as discussed in the proceeding pages. The chief cause of this decline is urbanization which is occurring over the prime agricultural land (Fig. 28).

McCurtain County has also experienced a decline in crop land although the level has remained constant for the last twenty years. The decline from the early thirties represents a change-over from the corn and cotton subculture of the South. Crop land now only occupies the better lowland soils of the region with forestry and livestock grazing taking over the old crop land.

The comparison of the crop land in the three counties represents an anomaly. In Texas County almost one-third of the crop land is maintained by intensive fuel subsidies. In Cleveland County most of the good agricultural land is being replaced by urbanization. And, in McCurtain County agriculture has found its niche with most of the marginal land that was farmed now put into other uses. It is obvious that the counties need to evaluate their land-use planning with an eye toward maximizing the natural energies, e.g. good soils, with a viewpoint of minimizing the fossil-fuel based subsidies required to maintain them.

Cleveland County

Of the three counties Cleveland is expected to undergo the most changes in land-use trends. The prime influence of land-use changes in this and future periods appears to be population changes. Texas County's land-use patterns have remained constant over the last thirty years as

has its population which has been predicted to do so (Wilhite 1958). McCurtain County's land-use patterns and population have also remained fairly constant over the last twenty-five years. Only minor changes are expected in the future with the changing of forest lands for grazing lands and vice versa expected to be the only significant changes (Murphy 1977). Therefore, this discussion will center on the land-use patterns and their predicted changes in Cleveland County.

Figure 31 depicts a generalized land-use model for Cleveland County. Within the model six land-use compartments are identified – crop land, grazing land (a combination of pasture and range land), forest land, water, urban land and open, idle land. The last category was included because it is one of the compartments included by Zeimetz, et al. (1976). Two approaches were taken in the modeling of changes. The first approach centered around the construction of differential equations derived from the model in Fig. 31. Transfer coefficients were obtained from Zeimetz, et al. (1976). The second approach centered on urban land and crop land employing regression equations based on county population dynamics and information contained in Myles (1960) and U.S. Agricultural Censuses. A detailed listing of transfer coefficients, differential equations and regression equations is found in Appendix B.

The model using the first approach detailed above was run for a fifty-year period from 1970-2020. The results of the simulation are given in Table 30 and displayed in Fig. 32. It can be seen that agricultural land and grazing land, both of which were shown previously to be relatively energy efficient, decrease by approximately one-third.

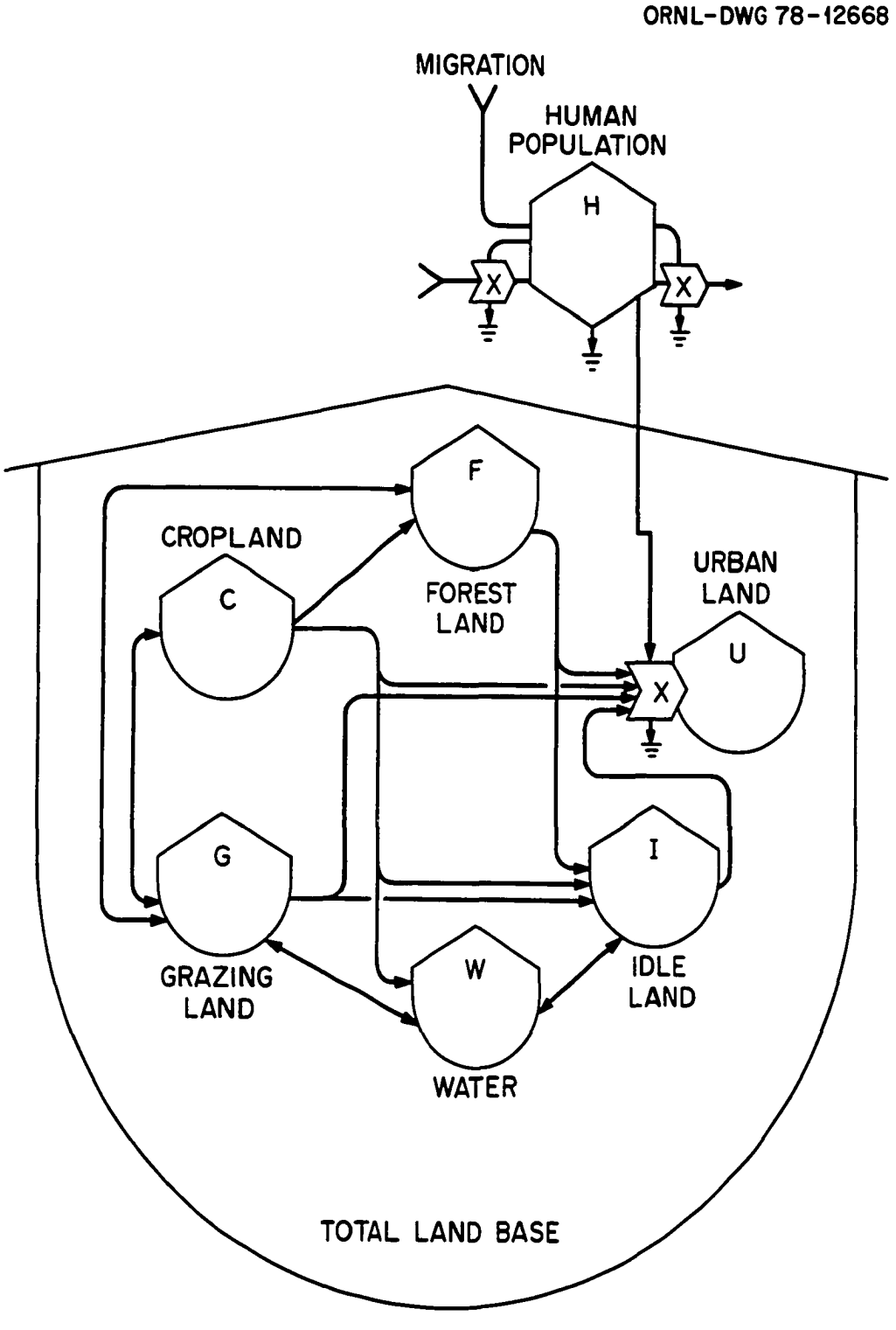

Figure 31. Land-use model of Cleveland County, Oklahoma.

Table 30. Numerical results of Cleveland County land-use model. Starting point was the year 1970, increments are half years.

1970	Cropland	Grazing Land	Forest Land	Water	Urban Land	Idle Land
0.0	15306.	71030.	29429.	7220.0	7807.0	13461.
0.50000	15259.	70680.	29872.	7267.2	8085.9	13599.
1.0000	15211.	70331.	29816.	7314.6	8365.7	13714.
1.5000	15164.	69985.	29760.	7362.2	8646.4	13835.
2.0000	15117.	69640.	29704.	7410.1	8928.0	13954.
2.5000	15069.	69297.	29648.	7458.1	9210.4	14063.
3.0000	15022.	68956.	29592.	7506.4	9493.7	14182.
3.5000	14975.	68617.	29537.	7554.8	9777.6	14291.
4.0000	14928.	68279.	29481.	7603.4	10062.	14398.
4.5000	14881.	67943.	29426.	7652.2	10348.	14501.
5.0000	14835.	67609.	29371.	7701.2	10634.	14602.
5.5000	14788.	67276.	29317.	7750.3	10921.	14700.
6.0000	14741.	66946.	29262.	7799.6	11208.	14796.
6.5000	14695.	66616.	29207.	7849.0	11496.	14888.
7.0000	14648.	66289.	29153.	7898.5	11785.	14978.
7.5000	14602.	65963.	29099.	7948.2	12074.	15065.
8.0000	14555.	65639.	29045.	7998.0	12363.	15150.
8.5000	14509.	65317.	28991.	8047.9	12654.	15233.
9.0000	14463.	64996.	28938.	8097.9	12944.	15312.
9.5000	14417.	64677.	28884.	8148.0	13235.	15390.
10.000	14371.	64360.	28831.	8198.3	13527.	15465.
10.500	14325.	64044.	28778.	8248.6	13819.	15538.
11.000	14279.	63730.	28725.	8299.0	14111.	15608.
11.500	14233.	63418.	28672.	8349.5	14404.	15676.
12.000	14187.	63107.	28619.	8400.1	14697.	15742.
12.500	14142.	62797.	28566.	8450.7	14990.	15806.
13.000	14096.	62490.	28514.	8501.4	15283.	15867.
13.500	14051.	62183.	28461.	8552.2	15577.	15927.
14.000	14005.	61879.	28409.	8601.0	15871.	15984.
14.500	13960.	61576.	28357.	8653.9	16166.	16039.
15.000	13915.	61274.	28305.	8704.8	16460.	16093.
15.500	13870.	60974.	28253.	8755.7	16755.	16144.
16.000	13825.	60676.	28201.	8806.7	17050.	16193.
16.500	13780.	60379.	28149.	8857.7	17345.	16241.
17.000	13735.	60084.	28097.	8908.8	17640.	16287.
17.500	13690.	59790.	28046.	8959.9	17935.	16330.
18.000	13645.	59497.	27994.	9010.9	18231.	16372.
18.500	13600.	59207.	27943.	9062.0	18526.	16413.
19.000	13556.	58917.	27892.	9113.1	18822.	16451.
19.500	13511.	58629.	27841.	9164.2	19117.	16488.
20.000	13467.	58343.	27790.	9215.4	19413.	16523.
20.500	13423.	58058.	27739.	9266.5	19709.	16556.
21.000	13378.	57774.	27688.	9317.5	20004.	16588.
21.500	13334.	57492.	27637.	9368.6	20300.	16618.
22.000	13290.	57212.	27587.	9419.7	20596.	16647.
22.500	13246.	56933.	27536.	9470.7	20891.	16674.
23.000	13202.	56655.	27486.	9521.8	21187.	16700.
23.500	13158.	56378.	27435.	9572.7	21482.	16724.
24.000	13115.	56103.	27385.	9623.7	21778.	16746.
24.500	13071.	55830.	27335.	9674.6	22073.	16768.
25.000	13028.	55558.	27285.	9725.5	22368.	16787.
25.500	12984.	55287.	27235.	9776.4	22663.	16805.
26.000	12941.	55018.	27185.	9827.2	22958.	16823.
26.500	12897.	54750.	27135.	9877.9	23252.	16839.
27.000	12854.	54483.	27085.	9928.5	23547.	16853.
27.500	12811.	54218.	27035.	9977.3	23841.	16866.
28.000	12768.	53954.	26985.	10030.	24135.	16878.
28.500	12725.	53691.	26935.	10080.	24429.	16889.
29.000	12682.	53430.	26886.	10131.	24723.	16898.
29.500	12640.	53170.	26837.	10181.	25016.	16907.
30.000	12597.	52911.	26787.	10232.	25310.	16914.
30.500	12554.	52654.	26738.	10282.	25603.	16920.
31.000	12512.	52398.	26689.	10332.	25895.	16925.
31.500	12469.	52143.	26639.	10382.	26188.	16928.
32.000	12427.	51890.	26590.	10432.	26480.	16931.
32.500	12385.	51638.	26541.	10482.	26772.	16933.
33.000	12343.	51387.	26492.	10532.	27063.	16933.
33.500	12301.	51138.	26443.	10582.	27355.	16933.
34.000	12259.	50889.	26394.	10631.	27645.	16931.
34.500	12217.	50642.	26345.	10681.	27936.	16929.
35.000	12175.	50397.	26297.	10731.	28226.	16925.
35.500	12133.	50152.	26248.	10780.	28516.	16921.
36.000	12092.	49909.	26199.	10829.	28806.	16916.
36.500	12050.	49667.	26151.	10878.	29095.	16909.
37.000	12009.	49426.	26102.	10928.	29384.	16902.
37.500	11968.	49186.	26053.	10977.	29672.	16894.
38.000	11926.	48948.	26005.	11025.	29960.	16886.
38.500	11885.	48711.	25957.	11074.	30248.	16876.
39.000	11844.	48475.	25908.	11123.	30535.	16865.
39.500	11803.	48240.	25860.	11172.	30822.	16854.
40.000	11762.	48006.	25812.	11220.	31108.	16842.
40.500	11722.	47774.	25763.	11268.	31394.	16829.
41.000	11681.	47543.	25715.	11317.	31679.	16815.
41.500	11640.	47313.	25667.	11365.	31964.	16801.
42.000	11600.	47084.	25619.	11413.	32249.	16786.
42.500	11559.	46856.	25571.	11461.	32533.	16770.
43.000	11519.	46629.	25523.	11508.	32817.	16754.
43.500	11479.	46404.	25475.	11556.	33100.	16736.
44.000	11439.	46180.	25427.	11603.	33383.	16719.
44.500	11399.	45956.	25379.	11651.	33665.	16700.
45.000	11359.	45734.	25331.	11698.	33946.	16681.
45.500	11319.	45513.	25284.	11745.	34228.	16661.
46.000	11279.	45294.	25236.	11792.	34508.	16641.
46.500	11240.	45075.	25188.	11839.	34789.	16620.
47.000	11200.	44857.	25141.	11886.	35068.	16598.
47.500	11161.	44641.	25093.	11932.	35348.	16576.
48.000	11122.	44425.	25045.	11979.	35626.	16553.
48.500	11082.	44211.	24998.	12025.	35904.	16530.
49.000	11043.	43998.	24950.	12071.	36182.	16506.
49.500	11004.	43785.	24903.	12117.	36459.	16481.
50.000	10965.	43574.	24856.	12163.	36735.	16456.

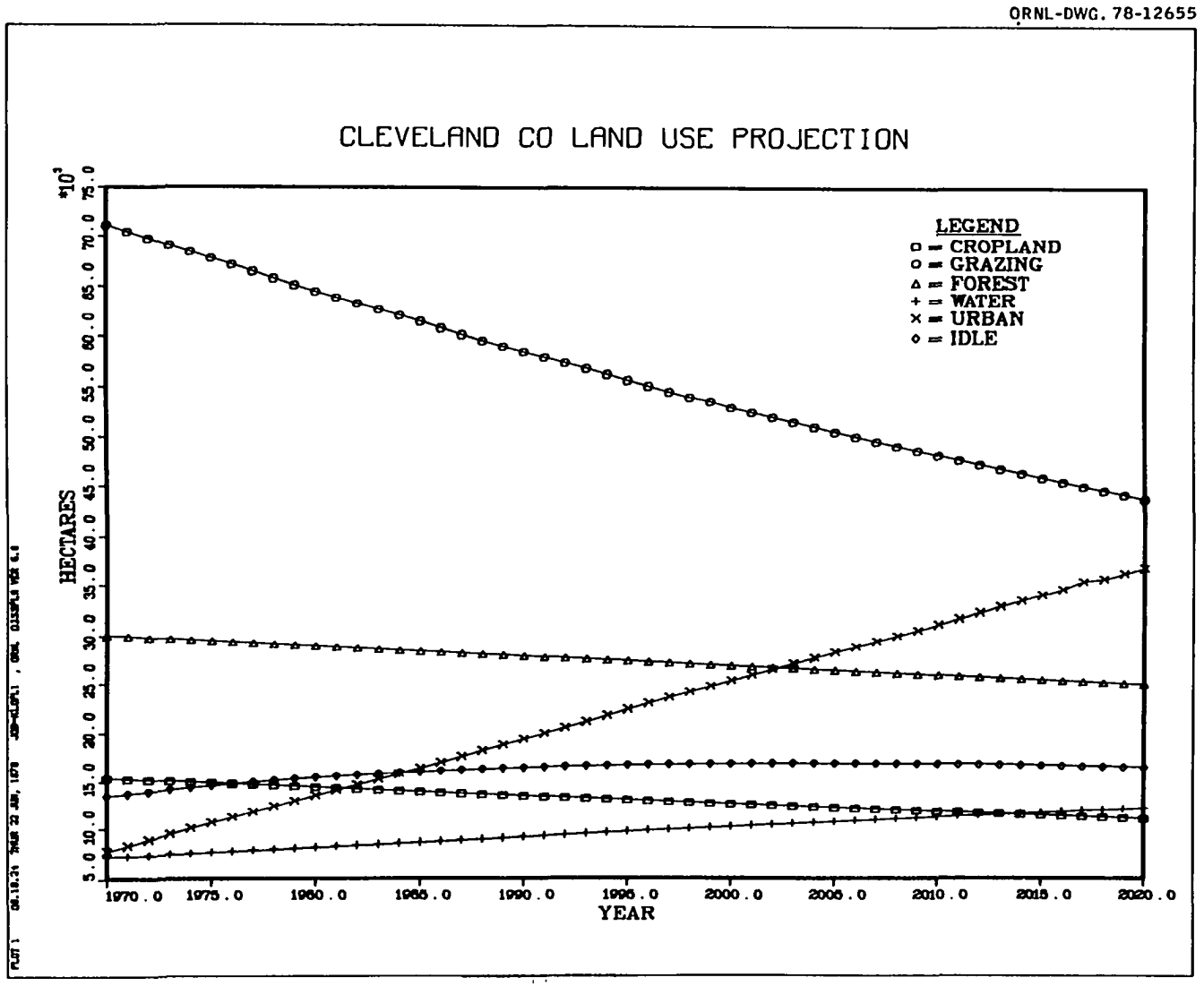

Figure 32. Cleveland County land-use projections employing transfer coefficients.

Urban land increases almost 450 percent. Water areas also increase approximately 75 percent, but this is probably a function of the land transfers to reservoir construction during the 1960's which have biased the transfer coefficients. Forest land decreases by approximately one-sixth. Idle land increases and then starts decreasing from the year 2000.

The results of the regression equations are shown in Fig. 33. The population figure reaches the proposed county limit of 250,000 (Cleveland Co. Planners, unpublished data) around the year 2015 (Fig. 34). However, at that point the county is still undergoing exponential growth. In actuality it will probably continue its exponential growth for a number of years and probably level off much like a logistical growth curve. Urban land using the regression model stays significantly below the values obtained with differential equations. However, agricultural land (Fig. 33) diminishes to less than half that predicted in the previous model simulation. The differences may be that historically agricultural land was most suited (location-wise) for settling. In recent years the urban land may be spreading out more away from the agricultural land. Whatever the situation, using a predicted value for future crop land from between the two estimates places its future in serious doubt.

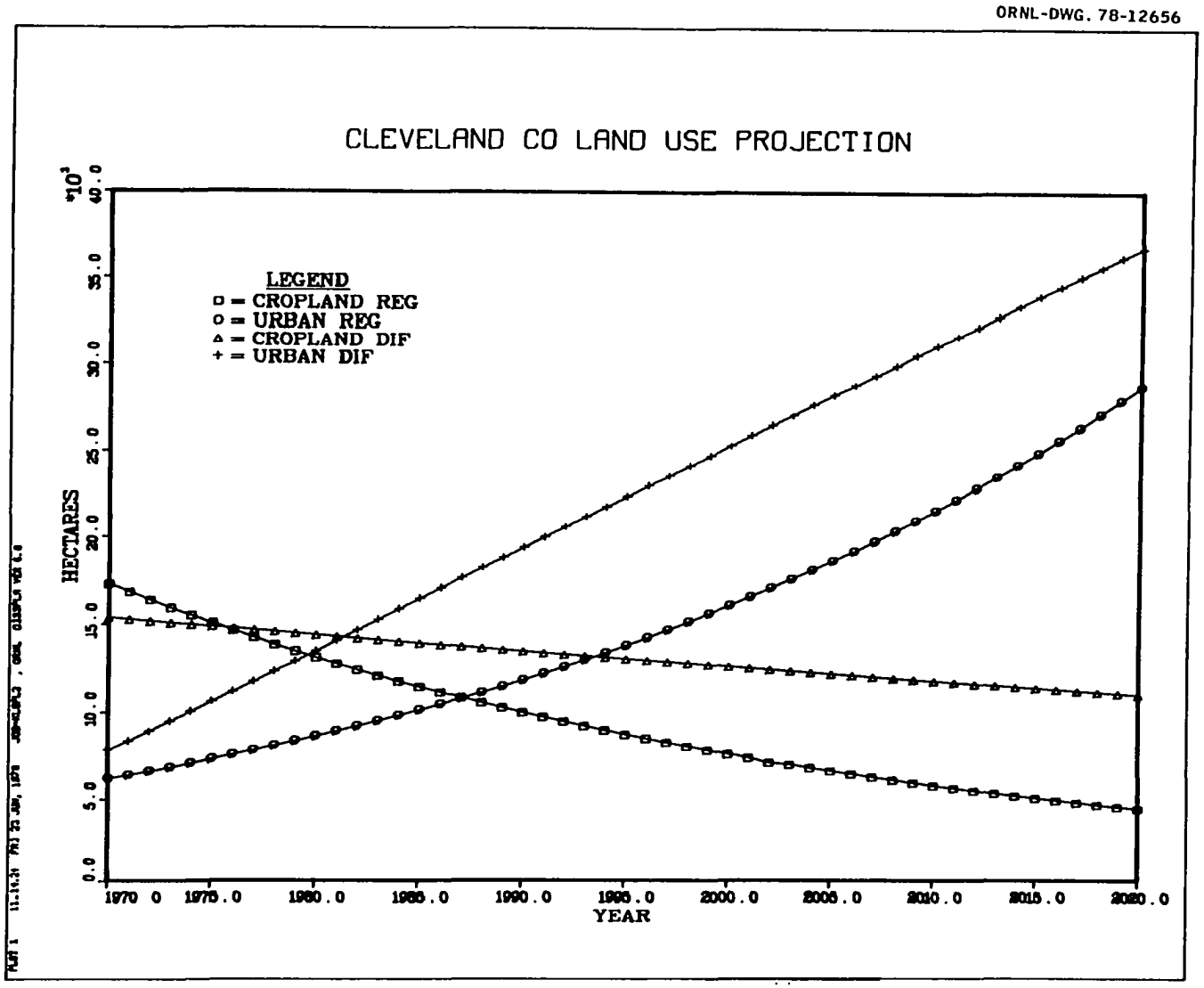

Figure 33. Cropland and urban land projections for Cleveland County, Oklahoma. REG — projections employing regression equations. DEF — projections employing differential equations.

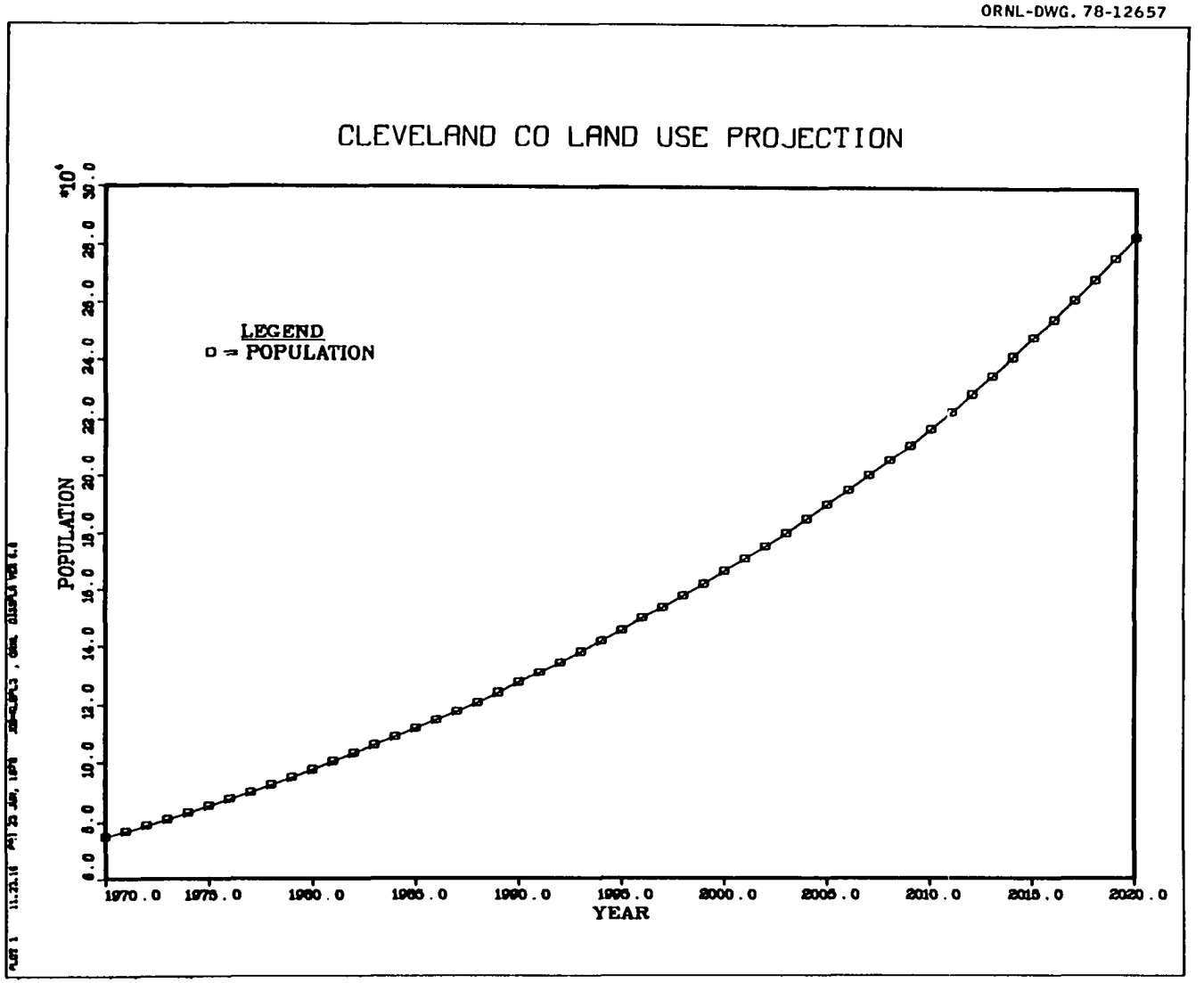

Figure 34. Population projections for Cleveland County, Oklahoma, 1970-2020.

CHAPTER V

CONCLUSIONS

Primary Productivity Profile

The conclusions derived from the compilation of the primary productivity profile of the State of Oklahoma were, to a large degree, discussed in the results section. However, a few additional points need to be stressed. As shown previously, Oklahoma exhibits an east to west transition in vegetation as well as primary production. This trend in primary production diverges primarily due to agricultural lands which account for over ninety percent of some counties' total annual primary production. This divergence emphasizes two points. One, much of the agricultural land within the state relies heavily on fossil fuel subsidization (as discussed in detail in the following section). Some are in fact marginal lands which perhaps should be relieved from their agricultural stress. And two, there exists in the state land that is below its potential productivity which can be managed properly to increase its annual primary production. In most instances agricultural ecosystems are more productive than the ones they replace. This does not mean that they are more efficient. Rather they are less efficient energy-wise than the systems they replace but their harvestable output is normally greater.

The lower energy efficiency of some of these systems is further emphasized by the negative correlations obtained between the environmental variables and the productivity of the county agricultural systems.

And finally, the supplementation of natural vegetation by agriculture, pastures, right-of-ways, urban areas, etc. needs to be more critically evaluated in order to insure the continued preservation of "natural areas" along with their accompanying benefits for future generations.

Agricultural Systems

The natural limiting factors imposed by physiography and climate greatly affect the energy requirements of the agricultural ecosystems. Texas County, for example, although it receives the highest annual solar radiation (16.4×10^9 kcal/ha to 15.3×10^9 and 14.6×10^9 kcal/ha for Cleveland and McCurtain Counties, respectively) is greatly limited by its water balance. Texas County requires 7188×10^3 kcal/FE to irrigate one ha with one cm of water or 4.6 times its "natural" value to the ecosystems. It is, of course, recognized that agricultural enterprises are striving to maximize production. But as shown by others (Cook 1976; Heichel 1976; National Academy of Sciences 1975; and Pimentel, et al. 1973) this has been accompanied by a concommitant decrease in the energy efficiency of agriculture. Texas County is a typical example of this phenomenon. Dryland cropping, e.g., wheat, barley, sorghum in the county can expect to result in a crop failure every 4-5 years due to drought conditions. Irrigation thus

provides not only an insurance mechanism but is also a factor resulting in increased yields. On the other hand, McCurtain County is restricted more by poorer soils and rough terrain as is indicated by its high fertilizer input and machinery costs (Table 9). Therefore, much of the rough land in McCurtain County is being converted either to land or plantation forestry.

Besides the natural limiting factors, the type of crop planted also influences the energy subsidization requirements. This is most obvious with the irrigated feedgrain and hay crops grown in Texas County, e.g., corn, soybeans, alfalfa. However, other crops with high dollar values, e.g., cotton, are also more energy dependent. As the dollar continues to deflate in value while the cost of energy rises concurrently, it appears obvious that a number of decisions need to be made. Some of these decisions which involve energy analysis center around three questions: 1) What is the best matching ratio for fossil fuel-based subsidies to natural occurring energy. Cleveland County possessed the highest ratio of natural to fuel-based energy of 3.50:1 compared to 2.49:1 and 2.61:1 for Texas and McCurtain Counties, respectively. This may in fact be a ratio for agricultural systems in Oklahoma to try to approximate. 2) Can the farmer determine what crop to plant based on the energy efficiency of the crop or the energy cost-benefit of a particular crop. This is especially applicable to the irrigated crops as discussed previously. And, 3) is it practical to determine which land should or should not be farmed based on the energy efficiency of the different alternatives. This last question clearly requires additional research.

A further point can be made from the results of the agricultural systems. This involves the primary productivity profile. As mentioned in Klopatek and Risser (1977) the total primary production, including agriculture, of a county can in fact be misleading because of the energy subsidization. For example, it required approximately 533, 369 and 646 kcal FE to produce one metric ton of primary production in Texas, Cleveland and McCurtain Counties. The level of subsidization determines to some extent the productivity of the land and not the lands' inherent production capability.

Grazing Systems

The results section on grazing systems clearly contrasts two types of similar systems – rangeland, a managed natural system and pasture, a man imposed system. Underlying the comparison of these systems is their energetic efficiency. This includes not only the energy costs and benefit of the primary production of rangeland and pastures, but also the energy efficiency of secondary (beef) production.

The high energy costs of maintaining pastureland, primarily due to irrigation, in Texas County clearly show why it is almost non-existent. The energy cost of maintaining pastureland in Cleveland and McCurtain Counties is also costly, although approximately only one-tenth that of Texas County. In fact for the two counties, respectively, the energy costs of maintaining a hectare of pasture compared to grazed natural rangeland is approximately 60:1 and 90:1. However, when the energy inputs and outputs of beef production are included, pastureland is economically attractive enough to make it a major competitive land use in Cleveland and McCurtain Counties.

The production efficiency of the grazing systems (Fig. 23) perhaps best summarizes the section on grazing system energetics. The maximum suggested efficiency for beef output is 6.75 kcal FE input for every one kcal FE output. This efficiency is, however, for the lowest available production (e.g. above the minimal maintenance energy requirements of cattle). Therefore, what needs to be accomplished is to reduce the ratio of input from the 22:1 and 14:1 ratios of pastureland in Cleveland and McCurtain Counties, respectively, to a level more energetically viable, but still productive. This pressure to use pastureland and rangeland more efficiently and effectively will increase as the high-energy dependent feedlot systems continue their decline.

Forest Systems

Similar to the section on grazing systems, the results section on forest systems also dealt with two contrasting ecosystems – a natural man-managed system, a hardwoods-pine forest, and a man-induced and intensely managed system, a loblolly pine forest. One of the most striking comparisons of the two types of forest was that of their NPP and GPP ratios, with NPP equalling 45 and 65 percent of GPP for the hardwoods-pine and loblolly pine, respectively. This underscores two points. First, the loblolly pine (plantations) can channel more of the GPP into NPP and thus the reason for planting loblolly pine. And secondly, the increased percentage going into NPP (much of what has been genetically induced by man) results in the necessary input of fossil fuel-based subsidies and human labor for maintenance of the plantation.

The fossil fuel-based energy inputs (8136×10^3 kcal FE/ha for conversion and 2461×10^3 kcal FE/ha for maintenance) and human

labor (104 x 10^3 kcal FE for maintenance) to the loblolly forest system naturally reduce its efficiency. Therefore, even though the harvested biomass (91 mt/ha) is considerably greater than that of the hardwood-pine forest (46 mt/ha) the efficiency or output/input including the logging costs for both types is lower (0.99 to 1.29). When the natural occurring solar energy is included, the output/input ratios change, not only decreases but also reverses themselves – 0.022 and 0.071 for the mixed forest and pine plantation, respectively. However, even though the efficiency of the pine plantation is greater than that of the mixed forest, its effectiveness is not. By effective it is meant that the ecological attributes of the system are upset. These include disruption of wildlife habitat, loss of soil nutrients, erosion, loss of some of hydrological recharge potential, etc. What must necessarily be accomplished in future forest management is to insure that the system is energetically efficient but ecologically effective.

Land Use

The counties differed greatly in their distribution of land use. Texas County is almost 100 percent agriculture (58.8%) and rangeland (39.9%). Cleveland County has about three-fourths of its land almost equally divided between pasture, rangeland and forest, with the rest divided between agriculture, urban, and water. McCurtain County has over ninety percent of its land base in pasture (23.4%) and forest (67.2%). The overriding question concerning the counties' land use and one that needs to be dealt with in future research is what is the best mix of land use. Can Texas County switch from its intensive

irrigated agriculture to more dryland farming while still making it economical? What is the best ratio of plantation forestry to natural forest to pasture in McCurtain County? And, can Cleveland County's agricultural land be saved from increasing urban sprawl? These are all questions that will have to be addressed in future research.

As shown previously, Cleveland County is the county that is undergoing the most rapid transition in its land-use classes (Fig. 32). The increase in urbanization is based on its population growth (Fig. 33), primarily from an influx of new people. Over the next fifty years, the outcome of the land-use model suggests that both cropland and grazing land will decrease by one-third. This is indeed unfortunate because the results of the energy analyses showed these land uses to be relatively energy efficient.

The situation Cleveland County faces, perhaps best underscores the intended purpose of this dissertation; that is the combination of knowledge obtained from the previous sections on the primary productivity profile and energy analysis of the various land uses with land-use trends and predictions to evolve recommendations for sound land management. Many of those recommendations have already been voiced in pages throughout this dissertation. Unfortunately, what is lacking in the overall analysis is the energy input-output balances for the county urban areas. The urban system in which energy and materials move through the urban environment is driven by demands of the human population (increasing exponentially in Cleveland County) for goods, services and energy. These are presently provided, for the most part, by fossil fuels. Improving the relationships between a county's structure and

function and intervening in its materials and energy balances require that an accurate assessment of the condition of the urban system be completed. Only in this manner can man's activities be properly coupled with nature's services to best plan the counties' land-use future. Alas, this will require additional research.

LITERATURE CITED

Albertson, F. W. 1937. Ecology of mixed prairie in west central Kansas. Ecol. Monogr. 7:481-547.

Antonini, G. A., K. C. Ewel, and J. J. Ewel. 1974. Ecological modelling of a tropical watershed: A guide to regional planning. pp. 51-74. In: B. Hoyle (ed.), Spatial Aspects of Development. John Wiley and Sons, London.

Art, H. W. and P. L. Marks. 1971. A summary of the biomass and net primary production in forest ecosystems of the world. pp. 3-32. In: H. E. Young (ed.), Forest Biomass Studies. Section 25, Growth and Yield. Fifteenth IUFRO Congress, University of Florida, Gainesville, Florida.

Art, H. W. and P. L. Marks. 1973. Primary productivity profile of New York and Massachusetts. IBP Eastern Deciduous Forest Biome Memo Report 72-39.

Baldwin, J. L. 1973. Climates of the United States. U.S. Department of Commerce. NOAA, Washington, D.C.

Barret, G. W., G. M. Van Dyne, and E. P. Odum. 1976. Stress ecology. Bioscience 26:192-197.

Barrick, E. R. and S. H. Dobson. 1973. Forage land-use efficiencies with commercial cattle. pp. 690-702. In: M. Heath, D. Metcalfe

and R. Barnes (eds.), Forages - The Science of Grassland Agriculture. Third Edition. Iowa State University Press, Ames, Iowa.

Bayley, S. and H. T. Odum. 1973. Energy evaluation of water management alternatives in the upper St. Johns River Basin of Florida. Final report to EPA, Region IV, Atlanta, Georgia.

Bekure, Solomon. 1971. An economic analysis of the intertemporal allocation of groundwater in the Central Ogallala Formation. Ph.D. Thesis, Oklahoma State University.

Bertleson, D. F. 1975. Southern pulpwood production, 1974. USDA Forest Service Bull. SO-54, New Orleans, Louisiana. 24 p.

Bishop, M. 1976. Pine plantations. In: H. T. Odum and M. Brown (eds.), Carrying capacity for Man and Nature in South Florida. Vol. III, Center for Wetlands, University of Florida, Gainesville, Florida. 886 p.

Borghstrom, G. 1973. World Food Resources. Intext Educational Publ., New York. 237 p.

Box, E. 1975. Quantitative evaluation of global primary productivity models generated by computers. pp. 265-283. In: H. Lieth and R. H. Whittaker (eds.), Primary Productivity of the Biosphere. Springer-Verlag, New York.

Bray, J. R. 1962. Estimates of energy budgets for a Typha (cattail) marsh. Science 136:1119-1120.

Brender, E. V. 1973. Silviculture of loblolly pine in the Georgia Piedmont. Georgia Forest Research Council Rept. No. 33., March 1973.

Browder, J., C. Littlejohn and D. Young. 1976. South Florida: Seeking a balance of man and nature. Division of State Planning, Florida Department of Administration, Tallahassee and Center for Wetlands, University of Florida, Gainesville, Florida. 117 p.

Bruner, W. E. 1931. The vegetation of Oklahoma. Ecol. Monogr. 1:99-188.

Buck, P. 1964. Relationship of the woody vegetation of the Wichita Mountains Wildlife Refuge to geological formations and soil types. Ecology 45:336-344.

Cable, D. R. 1971. Lehmann lovegrass on the Santa Rito Experimental Range 1937-1968. J. Range Mgmt. 24:17-21.

Carter, W. E. 1969. New lands and old traditions. Latin American Monograph, Number 6. University of Florida Press, Gainesville, Florida.

Center for Economic and Management Research. 1975. Statistical abstract of Oklahoma, 1975. University of Oklahoma, Norman, Oklahoma. 488 p.

Cervinka, V., W. J. Chancellor, R. J. Coffett, R. G. Curley, and J. B. Dobie. 1974. Energy requirements for agriculture in California. California Dept. of Food and Agr., and University of California, Davis, California.

Chapman, P. F. 1974. Energy costs: A review of the methods. Energy Policy 2:91-103.

Collier Carbon and Chemical Corporation. 1974. Energy requirements for fertilizer and food. Tech. Rep. No. 99, Aug. 28, 1974, RLL-74-230.

Cook, E. F. 1976. Man, Energy, Society. W. H. Freeman and Co., San Francisco, California. 478 p.

Cooper, W. E. and R. D. Vlasen. 1974. Ecological concepts and applications to planning. pp. 183-206. In: D. M. McAllister (ed.), Environment: A New Focus for Land-Use Planning. RANN, National Science Foundation, Washington, D.C.

Cottam, G., E. Howell, F. Stearns, and N. Kobriger. 1973. Productivity profile of Wisconsin. EDFB/IBP Memo Report 72-142. 191 p.

Cummins, K. W. and J. C. Wuychek. 1971. Caloric equivalents for investigations in ecological energetics. Internat'l Assoc. Theoretical and Appl. Limnol. Communications No. 18, Stuttgart, Germany. 158 p.

Dailey, N. S. (ed.). 1978. Environmental aspects of transmission lines - A selected, annotated bibliography. ORNL/EIS-122, Oak Ridge National Laboratory, Oak Ridge, Tennessee.

Davies, D. A. and J.M.M. Munro. 1974. Potential pasture production in the uplands of Wales. 4. Nitrogen response from sown and natural pasture. J. Br. Grassld. Soc. 29:149-158.

Davis, C. H. 1976. Energy required in fertilizer production. Abstract in Planet N Abstracts. Ag. Tech. Svc. Collier Carbon and Chem. Corp., Los Angeles, California. Volume 6, No. 9.

Davis, L. V. 1960. Geology and groundwater resources of southern McCurtain County, Oklahoma. Okla. Geol. Survey Bull. 86, Norman, Oklahoma. 108 p.

Dean, R., J. E. Ellis, R. W. Rice, and R. E. Bement. 1975. Nutrient removal by cattle from a short-grass prairie. J. Appl. Ecol. 12:25-29.

DeBell, D. S. and J. C. Harms. 1976. Identification of cost factors associated with intensive culture of short-rotation forest crops. Iowa St. J. Res. 50:295-300.

Denmann, C. E., W. W. Huffine, and J. D. Arnold. 1971. Bermuda grass forage production studies in Oklahoma 1962-1970. Okla. St. Univ. Ag. Exp. Sta. Bull. B-692.

DeSelm, H. R. 1971. Tennessee productivity profile. EDFB/IBP Memo Report 71-13. 182 p.

Doeksen, G. A. and D. F. Shreiner. 1971. A simulation model for Oklahoma with economic projections from 1962 to 1980. Okla. St. Univ. Agri. Exp. Sta. Bull. B-693. 23 p.

Drysdale, F. R. and C. E. Calef. 1976. The energetics of the United States of America: An atlas. BNL-50501, Brookhaven National Laboratory, Upton, New York. 437 p.

Duck, L. G. and J. B. Fletcher. 1943. A game type map of Oklahoma. State of Oklahoma Game and Fish Department. Reprinted by the Oklahoma Biological Survey, University of Oklahoma, Norman, Oklahoma.

Duck, L. G. and J. B. Fletcher. 1945. A survey of the game and fur-bearing animals of Oklahoma. Oklahoma Game and Fish Commission. Pittman-Robinson Series No. II. State Bull. No. 3. 144 p.

Dudnik, E. E. 1971. SYMAP. User's manual for synagraphic computer mapping. Department of Architecture, University of Illinois, Chicago Circle, Illinois. 114 p.

Dyck, G. W. and R. E. Bement. 1971. Herbage growth rate, forage intake, and forage quality in 1970 on heavily and lightly grazed blue-grama pastures. US IBP Grassland Biome Tech. Rep. No. 94. 14 p.

Earles, J. M. 1976. Forest statistics for east Oklahoma counties. South. For. Exp. Sta., New Orleans, Louisiana. 40 p. (USDA For. Serv. Resource Bull. SO-62)

Eck, H. V., W. G. McCully, and J. Stubbendreck. 1975. Response of short-grass plains vegetation to clipping, precipitation, and soil moisture. J. Range Mgmt. 28:194-197.

Fawcett, D. 1975. Crop and livestock budgets - Northwest Oklahoma. Okla. St. Univ. Agri. Ext. Svc.

Flood, D., J. Chang, and D. Schreiner. 1975. Energy requirements for Oklahoma. Okla. St. Univ. Agri. Exp. Sta. Oklahoma Curv. Farm Econ. 48(1):8-16.

Fowler, D. K., R. L. Curtis, and L. E. Beeman. 1977. Rights-of-way for energy and wildlife. TVA, Norris, Tennessee. Mimeo.

French, N. R. (ed.). 1971. Preliminary analysis of structure and function in grasslands. Proc. Symp. "The Grassland Biome: Analysis and Synthesis of First Year Data." Range Sci. Dept. Sci. Series No. 10. Colorado State University.

Gallucci, V. F. 1974. On the principles of thermodynamics in ecology. Ann. Rev. Ecol. Syst. 4:329-358.

Garrett, W. N. 1974. Estimation of the nutritional value of feeds. pp. 501-514. In: H. H. Cole and M. Ronning (eds.), Animal Agriculture. The Biology of Domestic Animals and their Use by Man. W. H. Freeman and Co., San Francisco, California. 788 p.

Garvey, G. 1972. Energy, Ecology, Economy. W. W. Norten and Co., Inc., New York. 235 p.

Georgescu-Roegen, N. 1971. The Entropy Law and the Economic Process. Harvard University Press, Cambridge, Massachusetts. 438 p.

Georgescu-Roegen, N. 1977. The steady state and ecological salvation: A thermodynamic analysis. Bioscience 27:266-271.

Gilliland, M. W. 1975. Energy analysis and public policy. Science 189:1051-1056.

Gilliland, M. W. and P. G. Risser. 1977. The use of systems diagrams for environmental impact assessment: Procedures and application. Ecol. Model. 3:183-210.

Gilliland, M. W. (ed.). 1978. Energy analysis: A new public policy tool. Proceedings of AAAS Symposium, Denver, Colorado, January 1976.

Golley, F. B. 1960. Energy dynamics of a foodchain of an old field community. Ecol. Monogr. 30:187-206.

Golley, F. B. 1970. Energy flux in ecosystems. pp. 69-90. In: J. A. Wiens (ed.), Ecosystem Structure and Function. Oregon State University Press, Corvallis, Oregon. 176 p.

Gorden, R. W. 1969. A proposed energy budget of a soybean field. Georgia Acad. Sci. 27:41-52.

Gray, F. 1966. Productivity of key soils in Oklahoma. Okla. St. Univ. Agri. Exp. Sta. Bull. B-650.

Gray, F. and H. M. Galloway. 1969. Soils of Oklahoma. Okla. St. Univ. Agri. Exp. Sta. Misc. Publ., July, 1959. Revised 1969.

Gray, F. and C. Stahnke. 1970. Classification of soils in the savanna forest transition in eastern Oklahoma. Okla. St. Univ. Agri. Exp. Sta. Bull. B-672.

Hall, C. A. S. 1975. Models and the decision-making process: The Hudson River Power Plant case. pp. 203-208. In: S. A. Levin (ed.), Ecosystem Analysis and Prediction. SIAM Institute for Mathematics and Society, Philadelphia, Pennsylvania. 337 p.

Hannon, B. 1973. An energy standard of value. Annals Amer. Acad. Political and Soc. Sci. 410:139-153.

Harlan, J. R. 1960. Grasslands of Oklahoma. Oklahoma State University, Stillwater, Oklahoma. 160 p.

Harper, J. L. 1974. Agricultural ecosystems. Agroecosystems 1:1-6.

Harris, W. F., R. A. Goldstein, and G. S. Henderson. 1973. Analysis of forest biomass pools, annual primary production, and turnover of biomass for a mixed deciduous forest watershed. In: Harold Young (ed.), Proceedings of the Working Party on Forest Biomass of IUFRO, Univ. Maine Press, Orono, Maine.

Healy, R. G. 1976. Land use and the states. Resources for the Future, Inc., Washington, D.C. 233 p.

Heath, M. E., D. S. Metcalfe, and R. F. Barnes (eds.). 1973. Forages:

The Science of Grassland Agriculture. Third Edition. Iowa State Univ. Press, Ames, Iowa. 755 p.

Hefley, H. M. 1937. Ecological status of the South Canadian River floodplain in Cleveland County, Oklahoma. Ecol. Monogr. 7: 345-402.

Heichel, G. H. 1976. Agricultural production and energy resources. Amer. Sci. 64:64-72.

Herendeen, R. L. and C. U. Bullard, III. 1974. Energy cost of commerce goods, 1963 and 1967. CAC Document No. 140, Center for Advanced Computation, University of Illinois, Urbana-Champaign, Illinois.

Hett, J. M. 1971. Land-use changes in East Tennessee and a simulation model which describes these changes for three counties. EDFB/IBP Memo Report 71-8, Oak Ridge National Laboratory, Ecol. Sci. Div. Publ. No. 414. 56 p.

Hills, G. A. 1961. The ecological basis for land-use planning. Ontario Dept. Lands and Forests, Research Paper No. 46, Tech. Series. 204 p.

Hirst, E. 1974. Energy for food: Farm to home. Trans. Amer. Soc. Agr. Engr. 17:323-326.

Hobbs, J. A. 1957. The winter wheat and grazing region. pp. 505-515. In: A. Stefferud (ed.), Soil, The Yearbook of Agriculture 1957. USDA.

Hole, F. D. 1953. Soil productivity ratings by towns in Wisconsin. Prepared for use in Wisconsin Land Values Survey, University of Wisconsin, Madison, Wisconsin.

Holling, C. S. and G. Orians. 1971. Toward an urban ecology. Bull. Ecol. Soc. Amer. 52:2-5.

Huettner, D. A. 1976. Net energy analysis: An economic assessment. Science 192(4235):101-104.

Huss, D. (ed.). 1964. A glossary of terms used in range management. Compiled and edited by Range Team Glossary Committee. Amer. Soc. Range Mgmt. 32 p.

Hyder, D. N., K. L. Knox, and C. L. Streeter. 1971. Metabolic components of cattle under light and heavy rates of stocking in 1970. US IBP Grassland Biome Tech. Rep. No. 128. 42 p.

Isaard, W. 1972. Ecologic-Economic Analysis for Regional Development. The Free Press, New York. 270 p.

Jamison, P. L. and S. M. Friedman (eds.). 1974. Energy flow in human communities. Proc. of a Workshop. Human Adaptability Coordinating Office, USIBP and Committee on the Biological Basis of Human Behavior Social Science Research Council.

Johnson, F. L. and P. G. Risser. 1972. Some vegetation-environment relationships in the upland forests of Oklahoma. J. Ecol. 60: 653-663.

Johnson, F. L. and P. G. Risser. 1973. Correlation analysis of rainfall and annual ring index of Central Oklahoma, blackjack and post oak. Amer. J. Bot. 60:475-478.

Johnson, F. L. and P. G. Risser. 1974. Biomass, annual net primary production and dynamics of six mineral elements in a post oak-blackjack oak forest. Ecology 55:1246-1258.

Johnson, F. L. and P. G. Risser. 1975. A quantitative comparison between an oak forest and an oak savannah in central Oklahoma. Southw. Nat. 20:75-84.

Johnson, W. A., V. Stoltzfus, and P. Crammer. 1977. Energy conservation in Amish agriculture. Science 198:373-378.

Jordan, C. F. 1971. A world pattern in plant energetics. Am. Sci. 59:425-433.

Jurdant, M., V. Gérardin, and J. L. Bélair. 1974. Ecological land survey: The biophysical basis for land-use planning. The Saguenay-Lac-Saing-Jean Region, Quebec. pp. 140-143. In: Proc. First International Congress of Ecology, The Hague, The Netherlands, September 8-14, 1974. Centre for Agricultural Publishing and Documentation, Wageningen, The Netherlands.

Kidman, R. B., R. J. Barret, and D. R. Koenig. 1977. Energy flow patterns for 1975. LA-6770, Los Alamos Scientific Laboratory, Los Alamos, New Mexico. 72 p.

Kira, T. 1975. Primary production of forests. pp. 5-40. In: J. P. Cooper (ed.), Photosynthesis and Productivity in Different Environments. IBP 3. Cambridge University Press, Cambridge, Great Britain.

Klopatek, J. M. 1974. CORSYMAP: A correlation analysis program for operation with SYMAP. Okla. Biol. Survey. 20 p. Mimeo.

Klopatek, J. M. 1978. The energetics of managed land-use systems. In: R. A. Fozzolare and C. B. Smith (eds.), Proc. International Conference on Energy Use Management, Tucson, Arizona, 1977. Volume 3. (In press)

Klopatek, J. M. and P. G. Risser. 1977. Primary productivity profile of Oklahoma. Okla. Biol. Survey Special Publ. 188 p.

Kobriger, N. P. 1973. The energetics of Wisconsin agricultural and marsh ecosystems. M.S. Thesis. Department of Botany, University of Wisconsin-Milwaukee. 139 p.

Kozlovsky, D. G. 1967. A critical evaluation of the trophic level concept. I. Ecological efficiencies. Ecology 49:48-60.

Kuchler, A. W. 1964. Potential natural vegetation of the continuous United States. Amer. Geog. Soc. Special Publ. No. 36.

Kylstra, C. D. 1974. Energy analysis as a common basis for optimally combining man's activities and nature or "What has mother nature done for you lately?" Talk presented to the National Symposium on Corporate Science Policy, Chicago, Illinois, October 11, 1974. Mimeo Copy. Energy Center, University of Florida, Gainesville, Florida. 37 p.

Lavine, M. J. and A. H. Meyburg. 1976. Toward environmental benefit/cost analysis: Measurement methodology. National Cooperative Highway Research Program, National Research Council, Washington, D.C.

Leach, G. 1975. Net energy analysis - is it any use? Energy Policy 3:332-345.

Lieth, H. 1973. Primary production: Terrestrial ecosystems. Human Ecol. 1:302-332.

Lieth, H. and E. Box. 1972. Evapotranspiration and primary productivity. pp. 37-46. In: J. R. Mather (ed.), C. W. Thornthwaite

Memorial Model in Selected Topics in Climatology. Thornthwaite Memorial, Elmer, New Jersey. Vol. 2.

Lindeman, R. L. 1942. The trophic-dynamic aspect of ecology. Ecology 23:399-418.

Lindsey, A. A. 1968. Role of the individual ecologist in natural area preservation. Bioscience 18:421-424.

Listokin, D. (ed.). 1974. Land-use controls: Present problems and future reforms. Center for Urban Policy Research, Rutgers University, New Brunswick, New Jersey. 398 p.

Little, E. L., Jr. and C. E. Olmstead. 1931. An ecological study of the Southeastern Oklahoma Protective Unit, Oklahoma Forest Service. University of Oklahoma, Norman, Oklahoma. 53 p.

Lockeretz, W. 1975. Consumption of agricultural resources in the production of fat cattle and foodgrains. J. Soil Water Cons. 30: 268-271.

Lotka, A. J. 1924. Contribution to energetics of evolution. In: Proceedings of the National Academy of Sciences 8:147-188.

Margalef, R. 1968. Perspectives in Ecological Theory. University of Chicago Press, Chicago, Illinois. 112 p.

McAllister, D. M. (ed.). 1974. Environment: A new focus for land-use planning. RANN, National Science Foundation, Washington, D.C.

McCarthy, M. M., R. C. Durfee, M. L. Newman, S. L. Tafee, R. Betson, C. W. Craven, Jr., T. L. Cox, J. Holbrook, D. D. Huff, and R. Strand. 1974. Regional environmental systems analysis: An approach for management. pp. 130-135. In: Proceedings

First International Congress of Ecology, The Hague, The Netherlands, September 8-14, 1974. Centre for Agricultural Publishing and Documentation, Wageningen, The Netherlands.

McHarg, I. L. 1969. Design with Nature. The Falcon Press, Philadelphia, Pennsylvania. 198 p.

Milby, T. H. and W. T. Penfound. 1965. Additions to the literature on the vegetation of Oklahoma. Proc. Okla. Acad. Sci. 45: 23-33.

Moak, J. E. and J. M. Kucera. 1975. Current costs and cost trends for forest practices in the South. For. Farmer Manual. pp. 75-82.

Monk, C. D., G. I. Child, and S. A. Nicholson. 1970. Biomass, litter and leaf surface area estimates of an oak-hickory forest. Oikos 21:138-141.

Murphy, D. A. 1977. East Oklahoma forests: Trends and outlook. USDA Forest Service Resource Bull. SO-63, New Orleans, Louisiana. 20 p.

Myles, E. L. 1960. Changing land-use patterns in Cleveland County, Oklahoma. M.S. Thesis. University of Oklahoma, Norman, Oklahoma.

National Academy of Sciences. 1969. United States - Canadian tables of feed composition. Second Edition - Revised. Publication 1684. Washington, D.C.

National Academy of Sciences. 1975. Agricultural production efficiency. National Research Council, Washington, D.C. 199 p.

National Science Foundation. 1977. Back to the range. Mosaic 8: 23-28.

Nemeth, J. C. 1973. Dry matter production in young loblolly (Pinus taeda L.) and slash pine (Pinus elliottii Engelm.) plantations. Ecol. Monogr. 43:21-41.

Odum, E. P. 1969. The strategy of ecosystem development. Science 164:262-270.

Odum, E. P. 1970. Optimum population and environment: A Georgian microcosm. Current History 58:355-359.

Odum, E. P. 1971. Fundamentals of Ecology. Third Edition. W. B. Saunders Co., Philadelphia, Pennsylvania. 574 p.

Odum, H. T. 1957. Trophic structure and productivity of Silver Springs, Florida. Ecol. Monogr. 27:55-112.

Odum, H. T. 1970. Energy value of water resources. Proceedings of Nineteenth Southern Water Research and Pollution Control Conference, April 1970. pp. 56-64.

Odum, H. T. 1972a. Use of energy diagrams for environmental impact statements. pp. 197-213. In: Tools for Coastal Management, Proceedings of Conference, February 14-15, 1972, Washington, D.C. Marine Technology Society, Washington, D.C.

Odum, H. T. 1972b. An energy circuit language for ecological and social systems: Its physical basis. pp. 139-211. In: B. C. Patten (ed.), Systems Analysis and Simulation in Ecology. Academic Press, New York. 592 p.

Odum, H. T. 1973. Energy, ecology, and economics. AMBIO 2:220-227.

Odum, H. T. 1974a. Terminating fallacies in National policy on energy, economics, and environment. In: A. B. Schmalz (ed.), Energy: Today's Choices, Tomorrow's Opportunities. World Future Society, Washington, D.C. 301 p.

Odum, H. T. 1974b. Energy quality concentration factors for estimating equivalent abilities of energies of various types to support work. H. T. Odum Working Paper. AEC Contract Rep. AEC-AT-(40-1)-4398.

Odum, H. T. 1975a. Comparing energy laws and corollaries of the maximum power principle with visual mathematics. pp. 239-263. In: Ecosystem Analysis and Prediction. Soc. Ind. Appl. Math., Philadelphia, Pennsylvania.

Odum, H. T. 1975b. Energy, value, and money. In: C. Hall and J. Day (eds.), Models as Ecological Tools: Theory and Case Histories. In press.

Odum, E. P. and H. T. Odum. 1972. Natural areas and necessary components of man's total environment. pp. 178-189. In: 37th North American Wildlife Resources Conf., Wildlife Mgmt. Inst., Washington, D.C.

Odum, H. T. and M. T. Brown (eds.). 1975. Carrying capacity for man and nature in South Florida. Center for Wetlands, University of Florida, Gainesville, Florida. 887 p.

Odum, H. T. and E. C. Odum. 1976. Energy Basis for Man and Nature. McGraw-Hill, New York. 297 p.

Odum, H. T. and L. L. Peterson. 1972. Relationship of energy and complexity in planning. Architectural Design 62:624-629.

Odum, H. T. and R. C. Pinkerton. 1955. Time's speed regulator: The optimum efficiency for maximum power output in physical and biological systems. Am. Sci. 43:331-343.

Oklahoma Department of Highways. 1975a. Oklahoma 1974 traffic characteristics: A factual analysis of traffic volumes and vehicle classification data. Planning Div., Okla. Hwy. Dept.

Oklahoma Department of Highways. 1975b. Oklahoma average daily traffic volumes for the state highway system. Planning Div., Okla. Hwy. Dept. Map.

Oklahoma Department of Highways. 1975c. Oklahoma average daily traffic volumes for selected county roads and city streets. Planning Div., Okla. Hwy. Dept. Map.

Oklahoma State Department of Agriculture. 1975. Tonnage distribution of fertilizer in Oklahoma counties by grades and material for the period July 1, 1974 to July 1, 1975.

Oklahoma, State of. 1970. Oklahoma Conservation Needs Inventory, March 1970.

Oklahoma State University Extension Service. 1975. Crop and livestock budgets - Central Oklahoma.

Oklahoma Water Resources Board. 1975. Oklahoma Comprehensive Water Plan. Phase I. Oklahoma City, Oklahoma.

Olson, R. A., J. K. Aase, and R. E. Mayer. 1970. Species, soils, climate, and fertility as related to top growth and evapotranspiration. pp. 229-253. In: Evapotranspiration in the Great Plains. Great Plains Agricultural Council, Research Committee. Publication No. 50.

Oregon, State of. 1975. Transition. A report to the Oregon Energy Council. Prepared by Office of Energy Research and Planning.

Paddock, W. C. 1970. How green the revolution. Bioscience 20:897-902.

Paine, R. T. 1971. The measurement and application of the calorie to ecological problems. Ann. Rev. Ecology and Systematics 2: 145-164.

Parton, W. J., Jr. 1972. Development of an urban-rural ecosystem model. Ph.D. Thesis. Department of Meteorology, University of Oklahoma, Norman, Oklahoma. 340 p.

Patric, J. H. and D. W. Smith. 1975. Forest management and nutrient cycling in eastern hardwoods. USDA Forest Service Research Paper NE-324.

Penfound, W. T. and E. L. Rice. 1957. Plant population changes in a native prairie plot plowed annually over a five-year period. Ecology 38:148-150.

Perino, J. V. and P. G. Risser. 1972. Some aspects of structure and function in Oklahoma old-field succession. Bull. Torrey Bot. Club 99:233-239.

Perry, A. M., W. D. Devine, and D. B. Reister. 1977. The energy cost of energy guidelines for net energy analysis and energy supply systems. Inst. Energy Analysis, Oak Ridge Assoc. Univ., ORAU/IEA 77-14. August 1977.

Pimentel, D., L. E. Hurd, A. C. Bellotti, M. J. Forster, I. N. Oka, O. D. Sholes, and R. J. Whitman. 1973. Food production and the energy crisis. Science 182:443-449.

Pimentel, D., W. Dritschilo, J. Krummel, and J. Kutzman. 1975. Energy and land constraints in food protein production. Science 190: 754-761.

Pimentel, D., E. C. Terhune, R. Dyson-Hudson, S. Rochereau, R. Samis, E. A. Smith, D. Denman, D. Reifschneider, and M. Shepard. 1976. Land degradation: Effects on food and energy resources. Science 194:149-155.

Rappaport, R. A. 1971. The flow of energy in an agricultural society. Sci. Amer. 225:117-122, 127-132.

Reader, R. 1973. A phenological approach to the estimation of photosynthetic period and primary productivity at the macroregion and biome levels in the eastern deciduous biome. IBP Eastern Deciduous Biome Rep. No. 73-2. 11 p.

Reilly, W. 1974. New directions in federal land-use legislation. pp. 331-360. In: D. Listokin (ed.), Land-Use Controls: Present Problems and Future Reforms. Center for Urban Policy Research, Rutgers University, New Brunswick, New Jersey. 398 p.

Rice, E. L. 1952. Phytosociological analysis of a tall-grass prairie in Marshall County, Oklahoma. Ecology 33:112-116.

Rice, E. L. 1964. Inhibition of nitrogen fixing and nitrifying bacteria by seed plants. I. Ecology 45:824-837.

Rice, E. L. 1965. Bottomland forests of north-central Oklahoma. Ecology 46:708-714.

Rice, E. L. and S. K. Pancholy. 1972. Inhibition of nitrification by climax ecosystems. Amer. J. Bot. 59:1033-1040.

Rice, E. L. and W. T. Penfound. 1959. The upland forests of Oklahoma. Ecology 40:593-608.

Rice, R. W., J. G. Nagy, and D. G. Peden. 1971. Functional interaction of large herbivores on grasslands. pp. 241-265. In: N. R. French (ed.), Preliminary Analysis of Structure and Function in Grasslands. Range Science Department, Science Ser. No. 10. Colorado State University, Ft. Collins, Colorado.

Riegel, A. 1947. Forage yields of various native pasture grasses established artificially at Hays, Kansas, in 1941. Trans. Kans. Acad. Sci. 50:174-190.

Risser, P. G. and E. L. Rice. 1971a. Diversity in tree species in Oklahoma upland forests. Ecology 52:876-880.

Risser, P. G. and E. L. Rice. 1971b. Phytosociological analysis of Oklahoma upland forest species. Ecology 52:940-945.

Roberts, F. 1975. Conference reports. The convention conventions. IFIAS Stockholm Workshop. Energy Policy 3:345-347.

Rochow, J. J. 1974. Estimates of aboveground biomass and primary productivity in a Missouri forest. J. Ecol. 62:567-577.

Romancier, R. M. 1974. Natural area programs. Jour. Forestry 72: 37-42.

Rumsey, W. B. 1971. Range seedings versus climax vegetation on three sites in Idaho. J. Range Mgmt. 24:447-450.

Schwartz, H. J. 1975. An economic analysis of energy use and agricultural output for representative farms in the Oklahoma Panhandle. M.S. Thesis. Department of Agricultural Economics, Oklahoma State University, Stillwater, Oklahoma. 227 p.

Shafer, E. L., G. H. Moeller, and R. E. Getty. 1974. Future leisure environments. USDA Forest Service Research Paper NE 301, Upper Darby, Pennsylvania. 16 p.

Sharp, D. and H. Lieth. 1974. North Carolina productivity profile. Revised edition 1972-1973. EDFB/IBP Memo Report 73-5. 29 p.

Sharpe, D. M. 1975. Methods of assessing the primary production of regions. pp. 147-166. In: H. Lieth and R. H. Whittaker (eds.), Primary Productivity of the Biosphere. Springer-Verlag, New York.

Shatz, J. 1974. Cosmic economics. pp. 20-26. In: A. B. Schmalz (ed.), Energy: Today's Choices, Tomorrow's Opportunities. World Future Society, Washington, D.C. 301 p.

Shreiner, D. F. and J. C. Chang. 1974. Projection and analysis of the economics of substate planning districts in Oklahoma. The Ozarks Regional Commission. FY 1975. 256 p.

Shugart, H. H., J. M. Klopatek, and W. R. Emanuel. 1978. Developments in ecology in systems analysis and land-use planning. In: E. J. Kormondy (ed.), Handbook of Contemporary World Developments in Ecology. Greenwood Press, Westport, Connecticut. (In press)

Sims, P. L. and J. S. Singh. 1971. Herbage dynamics and net primary production in certain ungrazed and grazed grasslands in North America. pp. 59-113. In: Preliminary Analysis of Structure and Function in Grasslands. Range Sci. Dept. Sci. Ser. No. 10. Colorado State University, Ft. Collins, Colorado.

Slesser, M. 1977. Energy analysis (letters to the editor). Science 196:260-261.

Smith, R. M., F. Gray, and H. M. Galloway. 1959. Fertility characteristics of Oklahoma soil associations. Okla. St. Univ. Ag. Exp. Sta. Bull. B-528.

Sorensen, J. A. 1971. A framework for identification and control of resource degradation and conflict in the multiple use of the coastal zone. M.S. Thesis. Department of Landscape Architecture, University of California, Berkeley, California.

Speckhart, F. H. and W. L. Green. 1976. A Guide to Using CSMP - The Continuous System Modeling Program. Prentice-Hall, Inc., Englewood Cliffs, New Jersey. 325 p.

Stearns, F., N. Kobriger, G. Cottam, and E. Howell. 1971. Productivity profile of Wisconsin. EDFB/IBP Memo Report No. 71-14. 35 p.

Steinitz, C., T. Murray, D. Sinton, and D. Way. 1969. A comparative study of resource analysis methods. Dept. Landscape, Architecture Research Office, Graduate School of Design, Harvard, Cambridge, Massachusetts.

Sternitzke, H. S. and C. C. Van Sickle. 1968. East Oklahoma forests. USDA Forest Service Publication. Southern Forest Experiment Station. 32 p.

Sweeten, J. M., D. L. Reddell, and B. R. Stewart. 1974. Feedlot manure as an energy source. Paper presented at 1974 Texas Section Meeting, Amer. Soc. Ag. Eng., Abilene, Texas, October 4-5, 1974.

Teal, J. M. 1962. Energy flow in the salt-marsh ecosystem of Georgia. Ecology 43:614-624.

Texas County Conservation District. 1973. Long-range total resource conservation program. April, 1973.

The Institute of Ecology. 1972. Man and the Living Environment. University of Wisconsin Press, Madison, Wisconsin. 267 p.

The Institute of Ecology. 1976. Impact of climatic fluctuation on major North American food crops. Washington, D.C. 23 p.

Tillman, R. (ed.). 1976. Proceedings of the First National Symposium on Environmental Concerns in Rights-of-Way Management, Mississippi State University Press, Mississippi State, Mississippi.

Trewartha, G. T. 1968. An Introduction to Climate. McGraw-Hill Book Company, New York. 408 p.

U.S. Corps of Engineers. 1973. Final environmental statement. Optima Lake, North Canadian River, Oklahoma. Tulsa, Oklahoma.

U.S. Department of Agriculture. 1961. Soil survey, Texas County, Oklahoma.

U.S. Department of Agriculture. 1972. The nation's range resources - A forest-range environmental study. Forest Resource Report No. 19.

U.S. Department of Agriculture. 1974. Soil survey, McCurtain County, Oklahoma.

U.S. Department of Commerce. 1973. Climatography of the United States No. 81. Oklahoma. Monthly normals of temperature precipitation, heating, and cooling degree days 1941-1970.

U.S. Environmental Protection Agency. 1974. Key land-use issues facing EPA. Prepared by Harbrige House, Inc. 371 p.

U.S. Soil Conservation Service. 1974. Soil interpretations for resource development. Oklahoma County, Oklahoma, SCS, Oklahoma City, Oklahoma.

Van Dyne, G. M. (ed.). 1969. The Ecosystem Concept in Natural Resource Management. Academic Press, New York. 383 p.

Ward, G. M., P. C. Knox, and B. W. Hobson. 1977. Beef production options and requirements for fossil fuel. Science 198:265-271.

Watt, K. E. 1968. Ecology and Resource Management - A Quantitative Approach. McGraw-Hill Book Company, New York. 450 p.

Wesley, J. P. 1974. Ecophysics. The Application of Physics to Ecology. Charles C. Thomas, Publ., Springfield, Illinois. 340 p.

White, W. C. 1973. Fertilizer-food-energy relationships. Paper presented to Amer. Chem. Soc., August 28, 1973, Chicago, Illinois.

Whittaker, R. H. 1975. Communities and Ecosystems. Second Edition. McMillan Company, New York. 355 p.

Whittaker, R. H. and G. M. Woodwell. 1972. Evolution of natural communities. pp. 137-156. In: J. A. Wiens (ed.), Ecosystem Structure and Function. Oregon State University Press, Corvallis, Oregon. 1976 p.

Whittaker, R. H. and P. L. Marks. 1975. Methods of assessing terrestrial productivity. pp. 55-118. In: H. Lieth and R. Whittaker (eds.), Primary Productivity of the Biosphere. Springer-Verlag, Inc., New York.

Whittaker, R. H. and G. M. Woodwell. 1969. Structure, production, and diversity of the oak-pine forest at Brookhaven, New York. J. Ecol. 57:155-174.

Wilhite, C. R. 1958. An economic base study of the Panhandle of Oklahoma. M.S. Thesis. University of Oklahoma, Norman, Oklahoma.

Williams, J. E. 1973. Atlas of the woody plants of Oklahoma. Okla. Biol. Sur. Special Publ.

Williams, G. 1975. Crop and livestock budgets - Southeast Oklahoma. Okla. St. Univ. Agr. Ext. Svc.

Wilson, L. L. and J. C. Burns. 1973. Utilization of forages with beef cows and calves. pp. 677-689. In: M. Heath, D. Metcalfe, and R. Barnes (eds.), Forages - The Science of Grassland Agriculture. Third Edition. Iowa State University Press, Ames, Iowa.

Woodwell, G. M. 1970. The energy cycle of the biosphere. pp. 25-36. In: The Biosphere: A Scientific American Book. Freeman and Company, San Francisco, California. 134 p.

Woodwell, G. M. 1974a. Short-circuiting the cheap power fantasy. Nat. Hist. 83(8):16-21.

Woodwell, G. M. 1974b. Success, succession, and Adam Smith. Bioscience 24:81-87.

Wood, P. R. and D. L. Hart, Jr. 1967. Availability of groundwater in Texas County, Oklahoma. U.S. Geol. Survey. Hgro. Invest. Atlas HA-250.

Wood, P. R. and L. C. Burton. 1968. Groundwater resources in Cleveland and Oklahoma counties. Okla. Geol. Survey Circ. 71, Norman, Oklahoma. 75 p.

Zeimetz, K. A., E. Dillon, E. E. Hardy, and R. C. Otte. 1976. Dynamics of land use in fast growth areas. Economic Research Service, USDA, Agri. Econ. Rep. No. 325.

Zuchetto, J. J. 1975. Energy-economic theory and mathematical models for combining the systems of man and nature. Case study: The urban region of Miami, Florida. Ecol. Model. 1:241-268.

APPENDIX A

SOURCES FOR STORAGES AND FLOWS IN FIGURE 24

Storages

Q_1 Biomass of mixed forest. 91.9 mt/ha (Table 23) x 4.9 kcal/g (Table 21) ÷ 20 (energy quality conversion factor, Table 4) = 22.5 x 10^6 kcal FE/ha.

Q_2 Forested land area, non-pine - 203,300 ha (Earles 1976).

Q_3 Biomass of loblolly pine plantation. 140 mt/ha (Nemeth 1973, Art and Marks 1971, Brender 1973) x 5.1 kcal/g (Nemeth 1973) ÷ 20 (energy quality conversion factor, Table 4) = 35.0 x 10^6 kcal FE/ha.

Q_4 Forested land in pine plantation - 129,000 ha (Earles 1976).

Q_5 Timber harvested from mixed forest - 7956 x 10^3 kcal FE/ha, 50 percent of Q_1 (Patric and Smith 1975).

Q_6 Timber harvested from pine plantation - 16750 x 10^3 kcal FE/ha, 65 percent of Q_3 (Bradburn, personal communication).

Flows

J_1 Solar radiation -7300 x 10^3 kcal FE/ha/yr derived from data of Baldwin (1973) and Table 4.

J_2 Precipitation - 4395 kcal FE/ha/yr. Discussed on pages 108-112.

J_3 Gross primary production, mixed forest - 5855 x 10^3 kcal FE/ha/yr. Values from Table 21 and Table 23. Energy quality conversion factor of 10 from Table 4.

J_4 Unharvested biomass, litterfall - 12374 x 10^3 kcal FE/ha. Data from Patric and Smith (1975); Harris, et al. (1973).

J_5 Gross primary production, pine plantation - 6275 x 10^3 kcal FE/ha/yr. Same as J_3 and Nemeth (1973).

J_6 Unharvested biomass, litterfall - 18250 x 10^3 kcal FE/ha. Data from Bradburn (personal communication) and same as J_4 above.

J_7 Conversion of forested land to non-forest uses. This figure was not available. However, by comparing the 1966 commercial forest land of 354,000 ha (Sternitzke and Van Sickle 1968) and the 1976 total of 332,200 ha (Earles 1976) a decline of 21,800 ha has taken place. However, a sizable proportion of that loss has been the inclusion of forest area in state parks and wilderness areas, therefore taking it out of the commercial forest category but still leaving it in forest.

J_8 Respiration, mixed forest - 3215 x 10^3 kcal FE/ha/yr. Table 21 and Table 23.

J_9 Respiration, pine plantation - 1195 x 10^3 kcal FE/ha/yr. Table 21.

J_{10} Fossil fuel, fertilizer, herbicide and machinery - 2031 x 10^3 kcal FE/ha. Table 19.

J_{11} Seedlings - 430 x 10^3 kcal FE/ha. Seedlings were assumed to be planted 6 x 6 feet or 1210 trees/acres or 3000 per hectare at a cost of $125/ha. Conversion factor from Herendeen and Bullard (1974) of 7600 kcal FE/1974$ (Forestry and greenhouse products).

J_{12} Human labor - 104 x 10^3 kcal FE/ha. Table 19.

J_{13} Conversion of various forest types to pine plantations - not available.

J_{14} Fuel, machinery and labor cost for conversion - 8136 x 10^3 kcal FE/ha. Conversion costs based on land preparation costs of approximately $900/ha (DeBell and Harms 1976), using conversion factor of an average between new construction and agricultural, forestry and fish services (Herendeen and Bullard 1974) - 9800 kcal FE/1974$.

J_{15} Harvest from mixed forest - 7956 x 10^3 kcal FE/ha. Approximately 50 percent of aboveground biomass (Patric and Smith 1975).

$J_{16,17}$ Logging expenditures - 4440 x 10^3 kcal FE/ha. Logging costs based on data described in DeBell and Harms (1976) and Bishop (1976).

J_{18} Harvest from pine plantation - 16750 x 10^3 kcal FE/ha. Based on approximately 65 percent of aboveground biomass (Bradburn, personal communication).

J_{19} Transportation costs - 2111 x 10^3 kcal FE/ha. Based on a 45 mile driving radius to the processing center as described in DeBell and Harms (1976).

J_{20} Timber from mixed forest - 7956 x 10^3 kcal FE/ha. Same as J_{15}.

J_{21} Timber from loblolly pine plantation - 16750 x 10^3 kcal FE/ha. Same as J_{18}.

APPENDIX B

Land-use transfer coefficients for Cleveland County based on a ten year time interval 1961-1970. Data extrapolated from Ziemetz, et al. (1976).

Receptor/Donor		Cropland	Grazing	Forest	Water	Urban	Idle
Cropland	(X_1)	0.850	0.030	0.002	0.008	0.025	0.085
Grazing	(X_2)	0.018	0.892	0.009	0.003	0.010	0.068
Forest	(X_3)	0.000	0.006	0.928	0.000	0.056	0.010
Water	(X_4)	0.000	0.000	0.000	0.987	0.000	0.013
Urban	(X_5)	0.000	0.000	0.000	0.000	1.000	0.000
Idle	(X_6)	0.005	0.001	0.026	0.052	0.208	0.208

Differential equations for land-use model based on single year transfers.

$$\dot{X}_1 = 0.0018\, X_2 + 0.0005\, X_6 - (0.003 + 0.0002 + 0.0008 + 0.0025 + 0.0085)\, X_1$$

$$\dot{X}_2 = 0.003\, X_1 + 0.0006\, X_3 + 0.0001\, X_6 - (0.0018 + 0.0009 + 0.0003 + 0.001 + 0.0068)\, X_2$$

$$\dot{X}_3 = 0.0002\, X_1 + 0.0009\, X_2 + 0.0026\, X_6 - (0.0006 + 0.0056 + 0.001)\, X_3$$

$$\dot{X}_4 = 0.0008\, X_1 + 0.0003\, X_2 + 0.0052\, X_6 - 0.0013\, X_4$$

$$\dot{X}_5 = 0.0025\, X_1 + 0.0010\, X_2 + 0.0056\, X_3 + 0.0208\, X_5$$

$$\dot{X}_6 = 0.0085\, X_1 + 0.0068\, X_2 + 0.001\, X_3 + 0.0013\, X_4 - (0.0005 + 0.0001 + 0.0026 + 0.0052 + 0.0208)\, X_6$$

Regression equations for population, urban and cropland models.

Population Model:

$$y = ae^{bx}, \quad r^2 = 0.94$$

where

y = population,

a = 8920.5,

b = 0.0266, and

x = time in years.

Urban Land Model:

$$y = a+bx, \quad r^2 = 1.00$$

where

y = urban land area,

a = -1885.0,

b = 0.108, and

x = population.

Cropland Model:

$$\ln y = a - [b(\ln x)], \quad r^2 = 0.93$$

where

y = cropland area,

a = 21.26,

b = 1.025, and

x = population.