74-21,981

MAFFUCCI, Linda York, 1940-
PERFORMANCE ON THE COLOURED PROGRESSIVE MATRICES AND A NON-LANGUAGE PROBLEM SOLVING BOX OF VERY BRIGHT, AVERAGE, AND HIGH-GRADE MENTALLY DEFECTIVE EIGHT-YEAR-OLDS.

The University of Oklahoma, Ph.D., 1974
Education, special

University Microfilms, A XEROX Company, Ann Arbor, Michigan

© Copyright by

Linda York Maffucci

1974

THIS DISSERTATION HAS BEEN MICROFILMED EXACTLY AS RECEIVED.

Downloaded from SHAREOK. Persistent Handle URL: https://hdl.handle.net/11244/3758

THE UNIVERSITY OF OKLAHOMA

GRADUATE COLLEGE

PERFORMANCE ON THE COLOURED PROGRESSIVE MATRICES AND A NON-LANGUAGE PROBLEM SOLVING BOX OF VERY BRIGHT, AVERAGE, AND HIGH-GRADE MENTALLY DEFECTIVE EIGHT-YEAR-OLDS

A DISSERTATION

SUBMITTED TO THE GRADUATE FACULTY

in partial fulfillment of the requirements for the

degree of

DOCTOR OF PHILOSOPHY

BY

LINDA YORK MAFFUCCI

Norman, Oklahoma

1974

PERFORMANCE ON THE COLOURED PROGRESSIVE MATRICES AND A NON-LANGUAGE PROBLEM SOLVING BOX OF VERY BRIGHT. AVERAGE, AND HIGH-GRADE MENTALLY DEFECTIVE EIGHT-YEAR-OLDS

APPROVED BY

P. T. Tesha

[illegible]

[illegible]

Mary Clare Selby

DISSERTATION COMMITTEE

ACKNOWLEDGMENTS

I feel very honored to have had the committee that I have. They are each outstanding individuals whose guidance and confidence helped to bring this study to a successful conclusion. I feel very privileged to have had them serve as members of my doctoral committee.

Dr. Teska you served as Chairman of my committee. Without your counsel and guidance this endeavor would not have been undertaken much less completed. Your brillance and keen insight have not only added much to this study, but also to my educational pursuits and to my life. There is no way I can properly thank you for all you have done for me, and for the impact having you as a professor has had upon my life.

Dr. Rupiper I shall always remember my first class with you! I am very grateful for the wise and generous counsel you have given me in planning my educational program. Your help in the design and statistical treatment of this study has been most valuable.

Dr. Petty your graciousness in serving on my committee is deeply appreciated. Your interest in and attention to questions I have had has been most considerate.

The first course I took in education was from you Dr. Williams. In it and those which followed you have been an inspiration to me as you are to so many. Your humour, wit, extensive knowledge, and keen mind make your classes memorable. Your willingness to serve as a member of this committee is deeply appreciated.

Dr. Danneffel for the testing with the Problem Box, my sincere thanks. I not only thank you for the excellent job of testing, but also for sharing the pains of locating subjects for this study. Your help and encouragement has been deeply appreciated. To the administrators, teachers, children and their parents who were involved in this study, I am indebted. My special thanks to Dr. Julie Teska for her help and encouragement.

Others have done much to help me achieve this goal. To Mr. and Mrs. Chelsea O. Burkett, I must extend my appreciation. Your early interest in me had much to do with my pursuing educational goals. To Dr. John Hemphill, who has long been a friend and a source of encouragement, thank you. To Mr. and Mrs. Robert Jones, Sr., who have helped me so much in so many ways through the years, thank you. For your help and encouragement, I am truly grateful.

Finally, to my parents, Kathleen Caldwell and Thomas York, and to my grandmother, Christina York, for your support and sacrifices in my behalf throughout the years I thank you.

L. Y. M.

TABLE OF CONTENTS

	Page
ACKNOWLEDGEMENTS	iv
LIST OF TABLES	vii
LIST OF ILLUSTRATIONS	viii
Chapter	
I. INTRODUCTION	1
Steps in Problem Solving	2
Review of the Literature	9
Statement of the Problem	29
Hypotheses	32
II. METHOD AND DESIGN	35
The Subjects	35
The Instruments	35
The Procedure	37
Statistical Analysis of the Data	39
III. RESULTS	41
IV. DISCUSSION	55
V. SUMMARY, CONCLUSIONS, AND RECOMMENDATIONS	63
Conclusions	65
Recommendations for Further Research	67
REFERENCES	69
APPENDIX	77

LIST OF TABLES

Table		Page
1.	Subject Data and Results of Testing, Group I, Group II, and Group III	50
2.	Observed Values of Statistical Tests	53

LIST OF ILLUSTRATIONS

Figure		Page
1.	Front view of the Problem Box	78
2.	Side view of the Problem Box	79
3.	Inside mechanism of the Problem Box	80
4.	Electrical Schematic Diagram of the Problem Box	81
5.	Performances of Group I, Group II, and Group III on the Coloured Progressive Matrices and the Problem Box.	54

PERFORMANCE ON THE COLOURED PROGRESSIVE MATRICES AND A NON-LANGUAGE PROBLEM SOLVING BOX OF VERY BRIGHT, AVERAGE, AND HIGH-GRADE MENTALLY DEFECTIVE EIGHT-YEAR-OLDS

CHAPTER I

INTRODUCTION

For many years there has been widespread interest in the area of problem solving, particularly as it relates to other areas of intellective functioning. Problem solving has been investigated many ways and there is some general agreement as to the nature of the problem solving process and the steps involved in it.

Following the work of Aristotle much emphasis was placed on the deductive process and until about fifty years ago every student in the university was required to take several courses in syllogistic reasoning. The deductive process is characterized by having the major premise as an accepted generalization, moving from the general to the particular.

Inductive reasoning involves moving from a set of particulars or individual pieces of information by putting them together and arriving at a generalization which then

can serve as the basis for deductive functioning. All people have undoubtedly always functioned both deductively and inductively.

Many investigations have been done regarding the problem solving performance of children. Tests which employ reading and enriched vocabulary are likely to be prejudiced in favor of subjects having higher intelligence; therefore, the Problem Box was designed by Teska (1942) to hold the language and cultural factors to a minimum in the investigation of problem solving. The Coloured Progressive Matrices developed by Raven (1947) in England and used extensively in that country is also a test of reasoning which is relatively non-verbal and culture-free. It would appear that the Coloured Progressive Matrices involves problem solving.

Steps in Problem Solving

It was Francis Bacon (1620) who first set forth the rules of the inductive process in relatively formal fashion. Bacon asserted that man could only know things by observation and experimentation. This gathering of empirical data he called the "presentation of instances." The information which was gathered was categorized into three tables showing presence, absence, and degrees. The first table included positive instances of the phenomenon; the second, negative instances; and the third, instances

which vary in degree. Together the three tables allowed one to refute all false suggestions put forward in reply to the question, "What is the form?", thus reaching the true answer by elimination. The next stage after the gathering of data Bacon termed the "first vintage." This "first vintage" was the solution of the problem which was presented by the data. The third stage Bacon termed "prerogative instances". This stage dealt with a statement of new philosophy. Bacon's method of induction was limited because he expected the orderly collection of data to lead to the hypothesis rather than implementing a preliminary hypothesis.

Many people in using, thinking about, or studying the inductive method, rely on the writings of John Dewey, who formalized the steps of the inductive process as most people know it. According to Dewey (1910) the following steps are involved in problem solving: "(i) a felt difficulty; (ii) its location and definition; (iii) suggestion of a possible solution; (iv) development by reasoning of the bearings of the suggestion; (v) further observation and experiment leading to its acceptance or rejection; that is, the conclusion of belief or disbelief" [p. 72]. Dewey later (1933) restated the process, observing that the sequence of the steps is not fixed--in actual practice one of the steps may be omitted, one may be expanded to

include various subphases, or two steps may be telescoped together.

Symonds (1936) suggested this analysis: first, the isolation and definition of the values that operate; second, the proposition of various solutions; third, estimation of the consequences of the various proposed alternatives; and fourth, decision making based on the proposed solutions whose outcomes have most bearing on or relationship to the values at stake and on the probability that certain outcomes would result.

Vinacke (1952) distinguished only three stages of problem solving which he considered logical: first, confrontation by a problem; second, seeking a solution; and third, solution. Vinacke's analysis of stage two included steps two, three, and four as defined by Dewey.

Johnson (1955) suggested: first, survey of the problem and analysis of the goal; second, production of probable solution attempts; and third, evaluation and judgement of the attempts. He determined that if the only solution produced is obviously correct, a separate act of evaluation is not necessary.

Merrifield, et al. (1962) suggested these five phases of problem solving: first, preparation; second, analysis; third, production; fourth, verification; and fifth, reapplication. The writers stated that steps can

be repeated wherever necessary. Step five is only necessary when a tentative solution has been rejected. When the solution is successful, the problem no longer exists.

Gagné (1966) has summarized the stages in problem solving as follows: "(1) statement of the problem; (2) defining the problem by distinguishing essential features; (3) searching for and formulating hypotheses; (4) verifying the solution" [p. 138]. He considers stage one to deal with external events that have occurred previously. The remaining stages he considers as inferences about the internal process of problem solving. According to Gagné, "...successful completion of any stage depends upon the existence of a capability in the preceding stage...." [p. 147].

Guilford (1967) proposed a model resembling a flowchart which was based on the Merrifield, et al. study in which he was a co-author. The five principal operations are: first, filtering (attention aroused and directed); second, cognition (problem sensed and structured); third, production (answers generated); fourth, cognition (new information obtained); and fifth, production (new answers generated). Guilford suggested that there is an exit after each of the five operations which indicates a cessation of the process. The first exit may be a rejection of the problem, the second exit may indicate a postpone-

ment or a problem impossible to solve, and the other exits may mean that a satisfactory solution to the problem has occurred. Looping phenomena provides feedback information and permits some flexibility in the order of events.

In a survey of the literature D'Zurilla, et al. (1971) found considerable agreement among various theorists and investigators regarding the general kinds of operations involved in problem solving. The consensus viewpoint is closely represented in the following five general stages: first, general orientation (set and attitudinal factors); second, problem definition and formulation; third, generation of alternatives; fourth, decision making (evaluation and selection); and fifth, verification. The writers suggest that problem solving seldom proceeds in these orderly steps. More typically the stages overlap and interact with each other.

From the various descriptions of the problem solving process cited previously it is apparent that the first step is one of recognition. A problem has first to be recognized as such and a need or desire for a solution must be felt on the part of the individual. The word "problem" implies a choice. If there are no alternatives or choices available and understood by the individual as such, then a problem does not exist for him.

Dewey (1910) indicated that at some point problem

solving has to be a conscious process in order for one to reflect upon the factors involved. There is perhaps in problem solving a synthesis of the conscious and the unconscious. The unconscious lends spontaneity and freshness to the process, while consciousness gives a measure of conviction and control to the process. If a solution is perceived along with the recognition of the problem, either the problem did not exist or the other steps in the process were omitted.

The second step in problem solving is one of induction. It involves the location, isolation, definition, and organization of the various elements or clues in search of generalizations. Isolation means to identify and separate the various clues. Definition is recognizing the clues as being relevant or irrelevant. The relevant clues are organized into meaningful wholes or generalizations. Organizing the data into meaningful wholes leads to a better understanding of the data, thereby causing the process of hypothesizing to be less difficult and the suggested hypotheses more likely to be relevant to the solutions of the problem. Dewey (1910) says, "The meaning suggested supplies a mental platform, an intellectual point of view, from which to note and define the data more carefully, to seek for additional observations, and to institute, experimentally, changed conditions" [p. 79].

The third step is the formulation of hypotheses. About this Symonds (1936) says, "The matter of proposing hypotheses is in one sense the very heart of problem solving, particularly of the more constructive or creative sort" [p. 126]. Unless the data is logical in nature and organized so that meaningful constellations are generated, the proposed hypotheses may not be appropriate to the solution of the problem.

The fourth step is syllogistic in form, thus deductive in nature. This is the reasoning process involved in testing the validity of the generated hypotheses or generalizations against the organized data in search of a possible solution. This not only involves a preliminary check of the proposed hypothesis, but also leads to a better understanding of the data. If the testing proves the proposed hypothesis to be wrong, other previously proposed hypotheses are tested or the data is reorganized in order to generate new and better hypotheses.

The fifth step is one of further observation. This leads to the ultimate acceptance or rejection of the solution.

This classical description of problem solving lends itself to the formulation of a test which will require all the steps as discretely as possible in order to evaluate the total process. However, problem solving may take

place without proceeding in this sequence or through this formal process. Some steps may be telescoped or omitted. The order of steps may be inverted or transposed. In some instances, such as in trial and error, inductive reasoning is not used since analyzing and organizing the clues is not involved. If the nature of the data is such that it does not lend itself to an adequate test of all relevant hypotheses, then deductive reasoning cannot be used. Inductive and deductive reasoning are fundamental to any problem solving process.

It would appear then that problem solving, whether it be inductive or deductive, is an extremely important part of our lives and one knows that by definition at least that the mentally defective do not function as well intellectively as do the normal or bright. The question then arises as to where in the reasoning process the mentally defective break down. Is it their failure to perceive the problem, to gather pertinent data, to formulate the hypothesis, inability to test the hypothesis, or inability to deduce correctly from generalizations? Or is the intellectual process in the dull similar or the same as that of the normal and bright, differing only in degree without any breakdown from step to step?

Review of the Literature

Most of the early studies with problem solving

were multiple choice studies involving animals. These included studies by Burtt (1916), Coburn and Yerkes (1915), Hamilton (1911), Yerkes (1914,1917), Yerkes and Coburn (1915), and Yerkes and Rossy (1917).

Lashley (1938) reported an extensive study involving visual discrimination with rats. He used an apparatus which required the animal to jump against stimulus cards from a distance of 20 cm.. If the animal made the correct choice, he was rewarded with food. If the choice was incorrect, he was punished by a fall into a net. Training involved having the animal achieve 20 consecutive correct trials. Rats learned to disciminate a variety of clues such as color, shape, position, visual distance, figure vs. total situation, figure-ground relations, continuity of figures, and others. Lashley pointed out that, "The study of visual discrimination in animals thus offers not only an approach to problems of sensory acuity but also a method for study of the nature and limits of capacity for generalization" [p. 123] .

Lashley found that once training had taken place the animal could identify the familiar attribute among a group of unfamiliar stimuli. Being presented with a constellation of forces in two situations and being able to identify the identical element found in both the situations is a simple or first order generalization. Generali-

zations which involve a reaction to a combination of clues, two clues simultaneously, or when one variable determines the reaction to another, that is if a, then b, he termed second order generalizations. Lashley's study with rats indicated an upper limit of generalization beyond which rats could not go, but which was relatively easy for the lower monkeys.

Yerkes (1921) modified his earlier apparatus and used it to investigate the ideational behavior of normal, defective, and deranged individuals. The device consisted of twelve wooden keys which could be raised or lowered in any combination. The subject indicated his choice by pressing one of the lowered keys. If the correct key was pressed a bell would ring.

Yerkes modified this device by arranging the keys so that any combination of twelve could be pushed out toward the subject leaving the rest of the keys inaccessible. When the subject made a correct choice a buzzer sounded. Yerkes presented a series of four problems whose solutions were; the first key on the left, the first key on the left and right alternately, third key from the left, and the middle key.

Yerkes recognized two types of solutions. First, the subject depressed the correct key in ten successive trials without generalization; secondly, the subject

selected the correct key and offered a generalization of the principle involved.

In a comparison of superior, average, defective, and pathological subjects Yerkes (1921) noted that some subjects were quite capable of selecting the correct key each time but were unable to verbalize the principle involved. These solutions were considered to be in "motor terms". This type of solution was common to the average, mentally defective, and pathological subjects. The superior group required fewer trials to solve the problems. The average group was next although there was some overlapping between the average and defective groups in the number of trials required.

Regardless of the statistical significance of the data collected, Yerkes found the subjects' responses to the multiple-choice problems illuminating and indicative of the subjects' "ideational characteristics". Some subjects were very systematic and confident in their attempts to solve the problem. Others appeared to employ a random approach and exhibited little confidence in their ability to solve the problem.

Heidbreeder (1928) used a multiple-choice technique with subjects ranging from age three to adult. His findings were that the number of trials decreased with age, that all subjects above age six gave verbal generaliza-

tions, and that the adult verbalizations were clearer and more objective.

Roberts (1932) used a multiple-choice apparatus with subjects between the ages of two and five. All the subjects solved the problem, but none below age three were able to verbalize their solution.

Aarons (1933) found a low positive correlation between multiple-choice problem solving and serial learning. He measured serial learning by testing subjects' ability to learn the order of cards.

Long and Welch (1941), using 135 children between 30 and 83 months old, found a steady rate of improvement by age in the ability to discriminate and match numbers. They reported a low positive correlation with intelligence.

House and Zeaman (1958) used a multiple-choice technique to compare two groups of institutionalized mentally defective children with two groups of public school normal children having professional parents. They concluded that intelligence is related to learning ability when the mental age is controlled.

Harter (1965), using the House and Zeaman apparatus with some modifications, found: (1) chronological age contributed little to learning set performance; (2) mental age and intelligence both influenced the learning set as evidenced by comparing the number of problems required to

form the learning set; (3) some subjects reached the criterion, but were unable to verbalize their solution; (4) all subjects reached the criterion in seven days or less; and (5) there were significant differences between the performances of boys and girls. Harter indicated that at each mental age level the learning set acquisition was accelerated as the intelligence level increased. It seemed that a combination of intelligence and mental age would be the best predictor of learning. Mental age level taken as a developmental measure of cognitive level would be expected to predict speed of learning.

Harter (1967) used the multiple-choice apparatus of House and Zeaman (1958) to investigate the role of I.Q. and M.A.. They found: (1) there were no significant sex differences; (2) the learning set acquisition at higher I.Q. and M.A. levels was significantly faster; (3) there was no significant correlation between C.A. and learning set acquisition; (4) learning set acquisition was faster in the noninstitutionalized than the institutionalized retardates; (5) learning set acquisition was faster for the lower I.Q. levels without social interaction; and (6) learning set acquisition was considerably faster for the higher I.Q. levels with social interaction, particularly at M.A. 5.6.

Moffitt (1969) used the multiple-choice apparatus

of House and Zeaman (1958) to investigate the problem solving performance of two groups of severely retarded children. The findings indicated the higher I.Q. groups performed significantly better than the lower I.Q. groups under all three percentages of reinforcement. There were no significant differences between the low M.A. groups and the high M.A. groups.

Gozali (1969) investigated the cognitive styles of retarded primary students using a circular version of Kagan's Matching Familiar Figures. Measures of latency of the first response and the total number of errors was recorded. From these measures, median response latency was calculated. Those subjects above the median were classified as "reflective" and those below as "impulsive". The impulsive subjects had more errors.

Lehtiö (1970) investigated the order of the importance of clues in formulating hypotheses. The time and number of errors for each subject were recorded. The order of analysis of the clues presented was color, size, and shape.

There have been a variety of types of mazes employed in investigations of maze-learning performance. Early studies using children were the ball rolling maze by Mattson (1933), the finger maze by Wieg (1932), the stylus-maze by McGinnis (1929) and the body-maze by Wenger

(1933)

Various other studies involving mazes have been done. A study was done by Hicks and Carr (1912) in which adults did slightly better than children, and children did slightly better than rats. Gould and Perrin (1916) used a stylus-maze which indicated only a slight difference in the performance of eleven-year-old children and twenty-one-year-old adults. Husband (1929) found university students slightly better than rats. Using an electrical type maze Lumley (1931) found a low correlation between intelligence test scores and the maze performance of psychology students. Mattson, (1933) using maze-learning found the learning curve for boys and girls almost identical. McGinnis (1929) found boys initially ahead of girls, whose skill soon equaled that of the boys; therefore, the girls made greater absolute gains during the testing than did the boys.

DeSantis (1931) used subjects ranging down to the moron level in a study investigating visual apprehension. He found the feeble-minded slower, but even down to the idiot level he found that spatial data was learned. He attributed the slowness to poor attentive capacity.

Gellerman (1931) used a room-size temporal alley maze in a study involving children ages 3-13 and 25 college students. The children required more than two and a

half times the trials of the adults. Beyond the age of four there was a gradual decrease in the number of trials required. For the adults there was a correlation of .58 between the number of trials to learn and intelligence and a similar correlation between accuracy and intelligence.

Maier (1936) found that the average child below age six was not able to combine experiences well enough to perform his test involving mazes. He found that performance improved with both C.A. and M.A. but such improvement was not significant until a C.A. or M.A. of six.

Mussen (1960) indicated that most studies dealing with concept formation involve themselves with the concepts subjects have already acquired rather than testing to determine the original learning from concept teaching. Mussen uses the terms "concept learning" and "concept discovery" and suggests that few clear-cut studies of "concept learning" have been done.

Peterson (1918) in an investigation of rational learning associated a number with a letter. The score correlated highly with estimates of intelligence and with subjects class standings in psychology.

Hull (1920) investigating concept learning in adults found improvement with age. He proposed that the selection of a common identical element may not neces-

sarily involve the same function as forming an abstraction from symbols where the common element is a broad term.

Vickers and Hoskings (1929) used tests presumed to measure intelligence in practical situations. These showed a steady increase in solutions with increase in age.

Hazlitt (1929) suggested that, regardless of chronological age, mental age, or relative brightness, if the experience factor is eliminated and all the data is within the understanding of the child, the reasoning process is essentially the same. The subjects were from three to seven years of age.

Smoke (1932) had twenty psychology students associate nonsense syllables with symbols. He reported a positive correlation between learning concepts rapidly and high intelligence.

Ray (1936) in a study involving bright, normal, and dull found that the bright solved more problems using fewer hypotheses, but the number of hypotheses tested correlated negatively with intelligence. Ray indicated that the perception of a large number of clues to generate hypotheses was not necessarily a sign of intelligence and that the generation of fewer hypotheses relevant to the data may be a sign of intelligence as evidenced by the negative correlation. The use of more irrelevant cues and perseverance of hypotheses were common to the normal

and dull as opposed to the bright. The bright verbalized the correct solution more often than did the dull.

Blake and Williams (1963) used a paired-associate problem to compare groups of students. Groups equated by M.A. showed no significant difference in level of concept attainment. In the groups equated on the basis of C.A., the superior group performed significantly better than the normal and the normal better than the retarded.

Stephens (1964, 1966, 1968) compared normal and subnormal boys. His conclusions were: (1) the normal group made significantly more correct responses than the subnormal group; (2) the number of correct category verbalizations by the normal group was significantly greater than for the subnormals; (3) results indicated that the subnormals were equally likely to exhibit both types of errors, generalization and non-generalization; whereas, the normals were more likely to attempt to generalize and thus to make more errors.

Many types of mechanical puzzles have been used to investigate problem solving performances of bright and dull children. Some mechanical implement, such as sticks to be fitted together, must be manipulated by the child in order to achieve the goal.

Ruger (1910) found that when the subject failed to perceive the logical solution, trial and error behavior

became evident. His study used puzzles which had rings to be separated.

Eagleson (1940) found a higher correlation between time required to solve the puzzle and the number of overt manipulations, than between time required and intelligence. He found no clear-cut differences between the performance of brights and dulls.

Alpert (1928) used an instrumentation problem with children similar to the one Kohler (1925) used with chimpanzees. Alpert reported: solution with immediate insight, solution with partial insight, and solution with sudden insight.

Matheson (1931) did a problem dealing with instrumentation with young subjects. He reported a low positive correlation between chonological age and solutions of problems, and between intelligence and solutions of problems.

Studies using syllogistic reasoning, involving only the deductive process, were done by Winch (1921, 1922), Wilkins (1928), Moore (1929), Ewert and Lambert (1932), Pyle (1935), and Sells (1936). These studies indicated: steady improvement with age, low positive to .71 positive correlation of I.Q. scores and school success, and a high positive correlation between generalizing and intelligence.

Broady (1940) investigated verbal and nonverbal reasoning of concrete classification and abstract classi-

fication. He found that all four types developed as a function of increasing chronolgical age. There was no further development of the nonverbal abstract after 174 months. He found the sequence of development to be: verbal concrete, nonverbal concrete, nonverbal abstract, and verbal abstract.

Other types of problem solving techniques have been investigated in comparing performance with intelligence. Harter (1930) reported a low positive correlation, Bedell (1934) found subjects in the lower quartile of intelligence scored little better than chance on an inference test, and Billings (1934) reported only moderate correlation with various academic fields. Roslow (1936) found correlation ranging from .32 to .81. Graham (1938), in a test tracing geometric figures without lifting the pencil, found success eight times as great for those in the upper decile as compared to those in the lower decile.

Sargent (1940) used anagrams in an attempt to investigate the thinking process both quantitatively and qualitatively. As the level of difficulty increased the correlation between I.Q. levels decreased.

Stevenson (1968) used anagrams in a study involving 258 boys and 271 girls. He found: at all grades the girls performed significantly better than the boys; consistent increases were recorded at each higher grade level

and at each higher intellectual level within the grade, and that anagrams are a productive and efficient means of testing the developmental change in the verbal process of children.

Lipton and Overton (1971), using anagrams in an investigation of the performance of grammar school children, found a significant improvement by grade level and by reading ability level within each grade. Word length was found to be significant in regard to both the number of solutions and solution time. The most improvement occurred between the second and fourth grade groups.

After considering the methods and devices used, Teska (1942) concluded, "None of these tests provided an opportunity for the exercise of all the elements of the problem-solving process. The mazes and puzzles are weak as tests of problem solving because the data do not yield to inductive reasoning. The tests of syllogistic reasoning emphasize the deductive element to the exclusion of the inductive element. The tests of concept formation, while well balanced as problem solving tests within the confines of a given age level, are limited because it is difficult to develop a list of concepts common to both younger and older subjects not too difficult or complex for the younger or too simple for older subjects. The multiple-choice technique is adapted to testing over a wide

age range. The generalizations necessary for the solution arise logically from the data--that is, inductively--and can be checked systematically against the data--that is, deductively--and at the same time can be stated with clarity in the language of the very young subject. The data is such that the older or brighter subjects can extract more meaning from it. The type of clues provided by the Yerkes' multiple choice is limited to clues of position and relationship. This limitation is a definite weakness of the test. A test providing a wider variety of clues, thus giving greater range to inductive processes but still retaining the systematic means of checking hypotheses, should be a more adequate test of the problem-solving process" pp. [26-27] .

Teska (1942) designed and built the original Problem Box to investigate either independently or as a group the five stages of the problem solving process. In a study of the performance of 34 bright and dull subjects of varying chronological ages Teska concluded, "The test provided several means of determining to what elements in the problem-solving process success or failure could be traced" [p. 45] . He also stated that, "The test was successful in revealing the differences in the performance of dull and bright children. It was possible to trace success or failure to particular steps in the problem-solving

process. Acquired comitants of intelligence such as good reading ability and rich vocabulary played a small role in success or failure. The test is adapted to use over a wide age range" [p. 52] .

Hensley (1957), in a comparison of the problem solving ability of bright and dull children using the original Problem Box, found that at each age level the bright were superior to the dull in the number of problems solved and the number of trials. The bright were also superior to the dull in frequency of verbal generalizations.

Pepper (1966) used the original Problem Box in an investigation of verbalization of problem solving behavior involving 66 volunteer undergraduate students at the University of Oklahoma. He concluded that learning was more efficient when the problem was stated and the reinforcement was clearly identified.

Heath (1970) modified the original Problem Box and used it in a study of black and white children of average intelligence from higher and lower socio-economic neighborhoods. He found no significant difference in the problem solving ability between black and white children from similar socio-economic backgrounds. He found no significant differences between socio-economic levels as measured by the Problem Box. He found that problem solving ability increased as C.A. and M.A. increased. The only significant

differences between mean number of trials used for solution and achieving verbal generalization were found in three problems solved by high socio-economic white. These problems were solved with fewer trials when correct verbal generalizations were given.

Danneffel (1972) further modified the Problem Box and used it in a comparative study of the problem solving ability of very bright, average, and mentally defective white eight-year-old children. He concluded intelligence to be a good predictor of non-language problem solving ability. His study indicated that both the total number of trials and the total number of problems solved using the Problem Box were equally good measures of problem solving ability.

Stark (1972) used the Problem Box to test the problem solving ability of hard of hearing children. He concluded that their language deficiency had little effect upon the cognitive processes of problem solving as measured by the Problem Box.

In 1936 Penrose and Raven announced the development of a new series of perceptual tests. The tests were based on Spearman's theory of noegenesis. According to Spearman (1927), mental processes can be divided into two categories, those which are mainly reproductive (repetitive) and those which are mainly eductive (concerned with intelli-

gent or creative mental activity). Forerunners to the tests of Penrose and Raven were those of Stevenson (1931) and Alexander (1935).

Stevenson (1931) designed a study dealing with nonverbal, spatial, and perceptual tests of education. These nonverbal tests of eduction he gave to 1037 girls. He then gave verbal eductive tests to the same population. He concluded that the verbal perceptual tests measured a single factor--apparently the innate factor--underlying general intelligence. He then analyzed the verbal eductive tests in a similar fashion and the results indicated the presence of a group factor.

Alexander (1935) conducted a study seeking to differentiate between concrete and abstract factors of intelligence. He demonstrated the presence of group factors in performance and verbal tests of intelligence.

Penrose and Raven (1936) concluded, "A series of tests free from group factors must apparently be strictly eductive in character and adequately presented in a purely perceptual form. Maximum usefulness depends upon the width of the range of mental ability which can be examined. The tests must be capable of fine gradation from those which are very easy to the very difficult without alteration of technical performance...Analogies have been shown to be among the most suitable tests for eductive ability"

[p. 7-8].

In 1938 Raven's Progressive Matrices Sets A,B,C,D and E was published. The scale consisted of 60 problems divided into sets of 12. The first problem in each set is as nearly as possible self-evident. Each successive problem becomes progressively more difficult. The scale is intended to measure the entire range of intellectual development from the time a child is able to grasp the idea of finding a missing part to complete a pattern until he reaches his maximum capacity to form comparisons and reason by analogy.

In 1947 a correction was made in item B8, and two derivatives of the standard scale were prepared. One was the Coloured Progressive Matrices Sets A, Ab, and B for use with young children and clinical work; the other was the Advanced Progressive Matrices Sets I and II for use with adults of average or above average intellectual capacity. In 1956 the problems of the 1938 standard series were rearranged to provide a more uniform probit distribution. The alternatives among which choices could be made were also rearranged in order to provide a more uniform distribution of common and uncommon errors of judgement. In 1956 the two 1947 derivatives of the standard scale were revised and rearranged.

The Coloured Progressive Matrices Sets A, Ab, and B

added a transitional set of 12 problems between Sets A and B of the 1938 standard scale. Set Ab was designed to be intermediate in difficulty between problem 5 and 12 of Set A, and between 1 and 7 of Set B. The problems are arranged so that, for the three sets combined, children between 5 and 11 solve about three additional problems each year.

Raven (1952) said, "One way to assess a person's capacity to form comparisons and reason by analogy, independently of his acquired knowledge, is to show him a series of simple geometric figures, and to ask him to complete the patterns of relations they convey. This can be done in various ways, as for example in the 'Matrix' type of test in which a series of patterns with parts removed, is shown. The parts removed can be extremely simple in shape and can be placed amongst other pieces of similar shape with figures on them which do not complete the patterns. To cover as far as possible the whole range of intellectual development, the figures in the patterns to be completed can be simple, but so constructed that as the test proceeds the problems become more difficult, because the relations between the figures become increasingly complex. By using a standard series of problems of this kind, arranged in order from the simpler to the more difficult, and by allowing a person to work through the series at his own speed, it is possible to assess a person's present

output of intellectual activity...It provides a sample of a person's intellectual activity at the time of the test, whatever his age or education may be, whatever language he speaks, and whatever his physical defects. The results do not show the knowledge a person has acquired as a result of mental activity in the past, nor do they show what his output of intellectual activity will be in the future. On the other hand they show very clearly a person's present CAPACITY for intellectual activity in the sense of his greatest clarity of thinking, given unlimited time" [pp. 168-9].

According to Raven (1960), "The Coloured Progressive Matrices, Sets A, Ab, B provides a valuable test for young children and old people, for anthropological studies and for clinical work. It can be used satisfactorily with people who, for any reason, cannot understand or speak the English language, suffer from physical disabilities, are intellectually sub-normal or have deteriorated. Success in Set Ab depends upon the apprehension of discrete figures as spatially related "wholes" and with Sets A and B adequately cover all the cognitive process of which children under 11 years of age are usually capable" [p. 2].

Statement of the Problem

The primary problem of this study is to compare the performance of bright, average, and high-grade mentally

defective eight-year-olds on the Coloured Progressive Matrices and the Problem Box, respectively. The subsidiary problems are: to investigate the number of verbalizations of solutions for problems 5-9 of the Problem Box by the three groups; to investigate the performance of the three groups on solving stoppage point problems A8, Ab8, and B8 on the Coloured Progressive Matrices; and to investigate the performance of the three groups on stoppage point problem 5 of the Problem Box.

For the purpose of this study, the following definitions will be used:

Instruments: the Coloured Progressive Matrices Ab, B (Revised Order, 1956) prepared by Raven, and the Problem Box, designed by Teska (1942), remodeled by Heath (1970), and improved by Danneffel (1972).

Problem Solving Ability on the Problem Box: measured by recording for each subject the number of problems solved, and the number of problems solved with a correct verbalization of the solution.

Solution of the Problem on the Problem Box: 10 consecutive correct responses indicated by 10 consecutive red lights, or a correct verbalization of the generalization regardless of the

number of correct trials.

Stoppage points: those plateaus appearing in the ladder of success on the Coloured Progressive Matrices and the Problem Box.

Generalization: the reasoning process which is used to find a general principle or develop a concept or generalization in order to solve a problem.

First Order Generalization: only one variable to deal with.

Second Order Generalization: deals with two variables.

Group I: the bright group, means the white eight-year-old children who scored 130 or above on the short form of the Stanford-Binet Intelligence Scale (1960).

Group II: the average group, means the white eight-year-old children who scored between 90 and 110 on the short form of the Stanford-Binet Intelligence Scale (1960).

Group III: the high-grade mentally defective group, means the white eight-year-old children who scored between 55 and 70 on the short form of the Stanford-Binet Intelligence Scale (1960).

Hypotheses

The following hypotheses will be tested:

1) There is no statistically significant difference between Group I and Group II in performance as measured in terms of the number of errors recorded on the Coloured Progressive Matrices in solving or not solving the problems.

2) There is no statistically significant difference between Group I and Group III in performance as measured in terms of the number of errors recorded on the Coloured Progressive Matrices in solving or not solving the problems.

3) There is no statistically significant difference between Group II and Group III in performance as measured in terms of the number of errors recorded on the Coloured Progressive Matrices in solving or not solving the problems.

4) There is no statistically significant difference in the problem solving ability between Group I and Group II as measured in terms of the number of solutions on problems 5-9 of the Problem Box.

5) There is no statistically significant difference in the problem solving ability between Group I and Group III as measured in terms of the number of solutions on problems 5-9 of the Problem Box.

6) There is no statistically significant difference in the problem solving ability between Group II and Group III as measured in terms of the number of solutions on problems 5-9 of the Problem Box.

7) There is no statistically significant difference between Group I and Group II in the number of correct verbalizations of solutions on problems 5-9 of the Problem Box.

8) There is no statistically significant difference between Group I and Group III in the number of correct verbalizations of solutions on problems 5-9 of the Problem Box.

9) There is no statistically significant difference between Group II and Group III in the number of correct verbalizations of solutions on problems 5-9 of the Problem Box.

10) There is no statistically significant difference between Group I and Group II in solving stoppage point problems A8, Ab8, and B8 on the Coloured Progressive Matrices.

11) There is no statistically significant difference between Group I and Group III in solving stoppage point problems A8, Ab8, and B8 on the Coloured Progressive Matrices.

12) There is no statistically significant dif-

ference between Group II and Group III in solving stoppage point problems A8, Ab8, and B8 on the Coloured Progressive Matrices.

13) There is no statistically significant difference between Group I and Group II in solving stoppage point problem 5 of the Problem Box.

14) There is no statistically significant difference between Group I and Group III in solving stoppage point problem 5 of the Problem Box.

15) There is no statistically significant difference between Group II and Group III in solving stoppage point problem 5 of the Problem Box.

CHAPTER II

METHOD AND DESIGN

The Subjects

A sample of 45 bright, average, and high-grade mentally defective children was obtained from the public schools in the vicinity of Norman, Oklahoma. These children were white eight-year-olds (± three months). Test scores which the schools had on file were used as prescreening method to locate those children who might score within the range of the prescribed groups. The researcher, being eligible for certification by the state of Oklahoma as a psychometrist, individually administered the short form of the Stanford-Binet Intelligence Scale (1960) to the possible subjects. The children who score 130 or above, between 90 and 110, and between 55 and 70 were placed in the appropriate groups.

All the children included in this sample were white, eight-year-olds (± three months), who scored 130 or above, between 90 and 110, or between 55 and 70 on the short form of the Stanford-Binet Intelligence Scale (1960). Table 1 is a description of the subjects and the results of the testing.

The Instruments

One of the instruments used in this study was the Coloured Progressive Matrices Sets A, Ab, and B (Revised Order, 1956) prepared by Raven. The book form of the test was used in this study.

The other instrument employed in this study was the Problem Box. The Problem Box was designed and verified by Teska (1942), remodeled by Heath (1970), and further modified by Danneffel (1972). It was this final model which was used in this study. Figures 1, 2, 3, and 4 in the Appendix are illustrations of the Problem Box. For a more detailed description of the Problem Box see Danneffel (1972).

The problems used in this study were the following:

5. Triangle when both figures are red, square when both figures are green.
6. Always the figure on the right, but in each trial one figure is red and the other is green. Color is a false clue.
7. Red-green alternation, regardless of figure.
8. Square when both figures are red, triangle when both figures are green.
9. Single alternation of the figures, figures appearing both red or both green. Color is a false clue.

Problem 5 was selected as a stoppage point problem because it is the first problem in the series of ten in which the subject must consider two clues, color and shape, in order to solve the problem. In problems 1-4 the correct

solution for each problem involved utilizing a single clue of either shape, position, or color. In problem 5 the subject must utilize both color and position clues in order to solve the problem. Problem 10 was deleted from this study as only two subjects, of the 45 tested, solved it.

The Procedure

The identified members in each of the three groups were individually administered the book form of the Coloured Progressive Matrices Sets A, Ab, and B according to the published standardized procedures. The researcher, a qualified psychometrist, administered all of the individual tests uding the Coloured Progressive Matrices. There was no time limit. Most subjects completed the test in fifteen to thirty minutes. The researcher recorded on the appropriate place on the record form the number of the piece pointed to in each problem by the subject as his final choice. The results of the testing for each subject are tabulated in Table 1.

All of the tests using the Problem Box were individually administered by the same examiner, a doctoral candidate, who was thoroughly familiar with the mechanics of the Problem Box and the testing procedure as established by Teska (1942). The examiner had had considerable training and experience in administering, scoring and interpreting individual diagnostic instruments.

On the first problem only the subject was told, "One of these four buttons (pointing out the four buttons) will cause this light (pointing to the light) to flash red". Then the examiner pressed the button beside the square and the red light came on. "Remember only one of the four buttons will cause the light to flash". Again the examiner pushed the button by the square and the red light came on. "The idea is to make the light flash red every time". Again the examiner pressed the button by the square lighting up the red light. Usually the subject began to push the buttons. If he did not, the examiner said, "You do it now". On the first problem only, if the subject did not solve it and verbalize the solution, a demonstration was given until he understood the solution.

The examiner recorded all of the responses, whether correct or incorrect, and the generalizations verbalized during the testing on a scoring sheet. (See Figure 5 in the Appendix.) The total number of problems solved, the total number of problems solved and verbalized, and the performance on stoppage point problem 5 are tabulated for each subject in Table 1. For a more detailed description of Problem Box testing procedure see Danneffel (1972).

Statistical Analysis of the Data

The Mann-Whitney U Test was selected to test hypotheses 1,2,3,4,5,6,7,8, and 9. Siegel (1956) stated that the Mann-Whitney U Test is one of the most powerful of the nonparametric tests. It is used to test whether two independent samples have been drawn from the same population. A parametric test was inappropriate because the assumptions of normality, homogenity of variance, and continuous data with equal intervals could not be met. The subjects in this sample were not randomly selected from the population. The measurements were ordinal. The scores from the two groups being compared were ranked together. In the instances of tied observations the average of the tied ranks was assigned. No correction for ties was made as Siegel (1956) stated that the test was more conservative when a correction for ties is not made. The value of U was determined by the formula method. Table K in Siegel (1956) was used to determine the critical value of U as the size of the sample exceeded 9 and was less than 20. If the observed value was equal to or less than the critical value at the .05 level of significance, two-tailed test, the null hypothesis was rejected.

The Chi-Square Test for Two Independent Samples in a 2 X 2 Contingency Table was selected to test hypotheses 10,11,12,13,14, and 15. Siegel (1956) stated, "perhaps

the most common of all uses of the X^2 test is the test of whether an observed breakdown of frequencies in a 2 X 2 contingency table could have occurred under H_o" [p. 107] . The Chi-Square Test was chosen because the two groups being compared were independent and because the scores under consideration were in discrete categories (pass and not pass). The formula used included Yates correction for continuity to correct for smaller expected frequencies. The degree of freedom was one. Table C in Siegel (1956) was used to determine the critical value of chi-square. When the observed value of chi-square was equal to or greater than the critical value at the .05 level of significance, two-tailed test, with one degree of freedom; then the null hypothesis was rejected.

CHAPTER III

RESULTS

Fourty-five white public school children eight years of age (± three months) were placed in appropriate groups in order to observe their performances on the Coloured Progressive Matrices Sets A, Ab, B and the Problem Box. Group I was composed of fifteen very bright children who scored 130 or above on the short form of the Stanford-Binet Intelligence Scale (1960). Group II was composed of fifteen average children who scored between 90 and 110 on the short form of the Stanford-Binet Intelligence Scale (1960). Group III was composed of fifteen educable mentally defective children who scored between 55 and 70 on the Stanford-Binet Intelligence Scale (1960). The researcher, being a qualified psychometrist, administered all of the intelligence tests and the Coloured Progressive Matrices. A doctoral student, qualified in testing, administered all of the tests with the Problem Box. Figure 5 shows the performances of the three groups on the Coloured Progressive Matrices and the Problem Box.

The Mann-Whitney U Test (Siegel, 1956) was used to test at the .05 level of significance (two-tailed), hypoth-

eses one through nine. The Mann-Whitney U Test was chosen because the groups being compared were independent, the subjects were not randomly selected from the population, and the measurements were ordinal. All of the null hypotheses tested with the Mann-Whitney U Test were rejected beyond the .05 level of significance. These results are presented in Table 2.

Hypotheses 1, 2, and 3 tested the performance of the three groups as measured in terms of the number of errors they made on the Coloured Progressive Matrices Sets A, Ab, B. The results, presented in Table 2, were as follows:

1) Between Groups I and II, the observed value of U was 8.5. The critical value for a two-tailed test at the .05 level is 64, and it is 40 at the .002 level. The observed value was less than the critical values so the null hypothesis was rejected at the .002 level. Group I, the bright group, made significantly fewer errors on the Coloured Progressive Matrices than did Group II, the average group.

2) Between Group I and III the observed value of U was 0. The critical value for a two-tailed test at the .05 level is 64, and it is 40 at the .002 level. The observed value was less than the critical values so the null hypothesis was rejected at the .002 level. Group I,

the bright group, made significantly fewer errors on the Coloured Progressive Matrices than did Group III, the high-grade mentally defective group.

3) Between Groups II and III the observed value of U was 7.5. The critical value of U for a two-tailed test at the .05 level is 64, and it is 40 at the .002 level. The observed value was less than the critical values so the null hypothesis was rejected at the .002 level. Group II, the average group, made significantly fewer errors on the Coloured Progressive Matrices than did Group III, the high-grade mentally defective group.

Hypotheses 4, 5, and 6 tested the problem solving ability of the three groups as measured by the number of solutions on problems 5-9 of the Problem Box. The results, presented in Table 2, were as follows:

1) Between Group I and Group II the observed value of U was 22.5. The critical value of U for a two-tailed test at the .05 level is 64, and it is 40 at the .002 level. The observed value was less than the critical values so the null hypothesis was rejected at the .002 level. Group I, the bright group, solved significantly more problems than did Group II, the average group.

2) Between Group I and Group III the observed value of U was 1. The critical value of U for a two-tailed test at the .05 level is 64, and it is 40 at the .002 level.

The observed value was less than the critical values so the null hypothesis was rejected at the .002 level. Group I, the bright group, solved significantly more problems than did Group III, the high-grade mentally defective group.

3) Between Group II and Group III the observed value of U was 29.5. The critical value of U for a two-tailed test at the .05 level is 64, and it is 40 at the .002 level. The observed value was less than the critical values so the null hypothesis was rejected at the .002 level. Group II, the average group, solved significantly more problems than did Group III, the high-grade mentally defective group.

Hypotheses 7, 8, and 9 tested the performances of the three groups as measured by the number of correct verbalizations of solutions on problems 5-9 of the Problem Box. The results, presented in Table 2, were as follows:

1) Between Group I and Group II the observed value of U was 22. The critical value of U for a two-tailed test at the .05 level is 64, and it is 40 at the .002 level. The observed value was less than the critical values so the null hupothesis was rejected at the .002 level. Group I, the bright group, solved and verbalized the solutions to significantly more problems than did Group II, the average group.

2) Between Group I and Group III the observed value of U was 1. The critical value of U for a two-tailed test at the .05 level is 64, and it is 40 at the .002 level. The observed value was less than the critical values so the null hypothesis was rejected at the .002 level. Group I, the bright group, solved and verbalized the solutions to significantly more problems than did Group III, the high-grade mentally defective group.

3) Between Group II and Group III the observed value of U was 33.5. The critical value of U for a two-tailed test at the .05 level is 64, and it is 40 at the .002 level. The observed value was less than the critical values so the null hupothesis was rejected at the .002 level. Group II, the average group, solved and verbalized the solutions to significantly more problems than did Group III, the high-grade mentally defective group.

The Chi-Square Test For Two Independent Samples was used to test at the .05 level of significance (two-tailed), hypotheses ten through fifteen. The Chi-Square Test was chosen because the groups being compared were independent, and the scores being considered were in discrete categories (pass and not pass). Yates correction for continuity to correct for smaller expected frequencies was used. The results of this analysis of the data are given in Table 2.

Hypotheses 10, 11, and 12 tested whether there were any significant differences between Groups I, II, and III in solving stoppage point problems A8, Ab8, and B8 on the Coloured Progressive Matrices. The results, presented in Table 2, were as follows:

1) Between Group I and Group II the observed value of chi-square on problem A8 was .535; on problem Ab8, 1.205; and on Problem B8, 5.709. The critical value of chi-square with df=1 at the .05 level of significance (two-tailed) is 3.84. On problems A8 and Ab8, the observed value of chi-square was not equal to or greater than the critical value of chi-square; therefore, the null hypothesis was accepted. On problem B8, the observed value of chi-square was greater than the critical value of chi-square; so, the null hypothesis was rejected beyond the .05 level. There were no significant differences between Group I, the bright group, and Group II, the average group, in solving problems A8 and Ab8 on the Coloured Progressive Matrices. There was a significant difference between Group I, the bright group, and Group II, the average group, in solving problem B8 on the Coloured Progressive Matrices.

2) Between Group I and Group III the observed value of chi-square on problem A8 was 10.58; on problem Ab8, 7.35; and on Problem B8, 7.275. The critical value of chi-square at the .05 level of significance (two-tailed)

was 3.84. The observed values of chi-square were greater than the critical values of chi-square so the null hypothesis was rejected beyond the .05 level. Group I, the bright group, did significantly better on stoppage point problems A8, Ab8, and B8 on the Coloured Progressive Matrices than did Group III, the high-grade mentally defective group.

3) Between Group II and Group III the observed value of chi-square on problems A8 was 4.935; on problem Ab8, 1.875; and on problem B8, .004. The critical value of chi-square at the .05 level of significance (two-tailed) was 3.84. Between Group II and Group III on problem A8 the observed value of chi-square was greater than the critical value of chi-square, so the null hupothesis was rejected at the .05 level. On problems Ab8 and B8 the observed values of chi-square were not equal to or greater than the critical value of chi-square; therefore, the null hypothesis was accepted. Significantly more from Group II, the average group, solved stoppage point problem A8 of the Coloured Progressive Matrices, than did those in Group III, the high-grade mentally defective group. There were no significant differences between Group II, the average group, and Group III, the high-grade mentally defective group, in solving stoppage point problems Ab8 and B8 of the Coloured Progressive Matrices.

Hypotheses 13, 14, and 15 tested whether there were any significant differences between Group I, II, and III in solving stoppage point problem 5 of the Problem Box. The results, presented in Table 2 were as follows:

1) Between Group I and Group II the observed value of chi-square was .634. The critical value of chi-square at the .05 level of significance (two-tailed) is 3.84. The observed value of chi-square was not equal to or greater than the critical value of chi-square; therefore the null hypothesis was accepted. There was no significant difference between Group I, the bright group, and Group II, the average group, in solving stoppage point problem 5 of the Problem Box.

2) Between Group I and Group III the observed value of chi-square was 10.848. The critical value of chi-square at the .05 level of significance (two-tailed) is 3.84. The observed value of chi-square was greater than the critical value of chi-square; therefore, the null hypothesis was rejected beyond the .05 level. Significantly more of those in Group I, the bright group, solved stoppage point problem 5 of the Problem Box, than did those in Group III, the high-grade mentally defective group.

3) Between Group II and Group III the observed value of chi-square was 5.167. The critical value of chi-square at the .05 level of significance (two-tailed) was

3.84. The observed value of chi-square was greater than the critical value of chi-square; therefore, the null hypothesis was rejected beyond the .05 level. Significantly more of those in Group II, the average group, solved stoppage point problem 5 of the Problem Box, than did those in Group III, the high-grade mentally defective group.

TABLE 1

SUBJECT DATA AND RESULTS OF TESTING, GROUP I

Subject No.	C.A.	I.Q.	M.A.	Problem Box			Coloured Progressive Matrices			
				Total Problems Solved 5-9	Total Solved and Verbalized	Problem 5	Total Problems Solved	A8	Ab8	B8
1	7-9	138	10-9	5	4	+	27	+	+	-
2	8-0	130	10-6	4	4	+	23	+	-	-
3	8-2	130	10-9	5	5	+	30	+	+	+
4	7-11	141	11-3	3	3	+	32	+	+	+
5	7-11	151	12-0	3	3	+	33	+	+	+
6	8-2	145	12-0	4	4	+	32	+	-	+
7	7-9	135	10-6	3	3	+	24	+	-	-
8	7-10	133	10-6	4	4	+	27	+	-	-
9	8-0	143	11-6	3	3	+	33	+	-	+
10	7-10	146	11-6	4	4	+	32	+	+	+
11	8-3	135	11-3	3	3	-	31	+	+	+
12	8-0	136	11-0	2	2	-	23	+	+	-
13	8-2	130	10-9	4	4	+	33	+	+	+
14	8-0	139	11-3	2	2	-	27	+	-	-
15	8-0	130	10-6	3	3	+	26	+	+	-

+ solved
- not solved

TABLE 1--Continued

SUBJECT DATA AND RESULTS OF TESTING, GROUP II

Subject No.	C.A.	I.Q.	M.A.	Problem Box			Coloured Progressive Matrices			
				Total Problems Solved 5-9	Total Solved and Verbalized	Problem 5	Total Problems Solved	A8	Ab8	B8
16	7-9	98	7-9	2	2	+	21	+	-	-
17	8-3	104	8-9	3	3	+	27	+	-	+
18	8-2	96	8-0	2	2	+	22	+	+	-
19	8-1	110	9-0	4	4	+	22	-	+	-
20	8-1	97	8-0	2	2	+	22	+	+	-
21	8-3	104	8-9	1	1	-	18	+	-	-
22	8-0	98	8-0	2	2	+	22	-	-	-
23	7-9	92	7-3	0	0	-	20	+	-	-
24	8-0	95	7-9	2	2	-	16	+	-	-
25	8-1	91	7-6	1	1	+	21	+	-	-
26	7-11	109	8-9	2	2	+	21	+	+	-
27	8-0	92	7-6	1	1	-	21	+	-	-
28	7-10	104	8-3	1	0	-	22	+	-	-
29	8-0	101	8-3	0	0	-	25	+	+	-
30	7-11	93	7-6	2	2	+	19	+	-	-

+ solved
- not solved

TABLE 1--Continued

SUBJECT DATA AND RESULTS OF TESTING, GROUP III

Subject No.	C.A.	I.Q.	M.A.	Problem Box			Coloured Progressive Matrices			
				Total Problems Solved 5-9	Total Solved and Verbalized	Problem 5	Total Problems Solved	A8	Ab8	B8
31	8-1	68	5-8	2	2	+	15	-	-	-
32	8-2	68	5-9	1	0	-	14	+	-	-
33	7-11	68	5-7	1	1	+	19	+	-	-
34	7-9	60	4-10	0	0	-	15	+	-	-
35	8-3	70	6-0	0	0	-	15	+	-	-
36	8-0	69	5-9	0	0	-	13	-	-	-
37	7-11	58	4-10	0	0	-	14	-	-	-
38	8-3	65	5-7	0	0	-	15	-	-	-
39	7-9	66	5-4	0	0	-	14	-	-	-
40	7-9	57	4-8	0	0	-	17	+	-	-
41	8-3	56	4-10	0	0	-	15	-	+	-
42	8-0	67	5-7	0	0	-	20	-	-	-
43	7-11	67	5-6	0	0	-	16	-	-	-
44	7-11	58	4-10	0	0	-	13	+	-	-
45	8-3	59	5-1	0	0	-	15	-	-	-

+ solved
- not solved

TABLE 2

OBSERVED VALUES OF STATISTICAL TESTS

MANN-WHITNEY U TEST

Groups	Number of problems solved Problem Box	Number of problems solved and verbalized Problem Box	Number of problems solved Coloured Progressive Matrices
I vs. II	22.5*	22*	8.5*
I vs. III	1*	1*	0*
II vs. III	29.5*	33.5*	7.5*

*Significant at .05 level

CHI-SQUARE TEST FOR TWO INDEPENDENT SAMPLES

Groups	Problem Box #5	Coloured Progressive Matrices A8	Ab8	B8
I vs. II	.634	.535	1.205	5.709*
I vs. III	10.848*	10.158*	7.35*	7.275*
II vs. III	5.167*	4.935*	1.875	.004

*Significant at .05 level

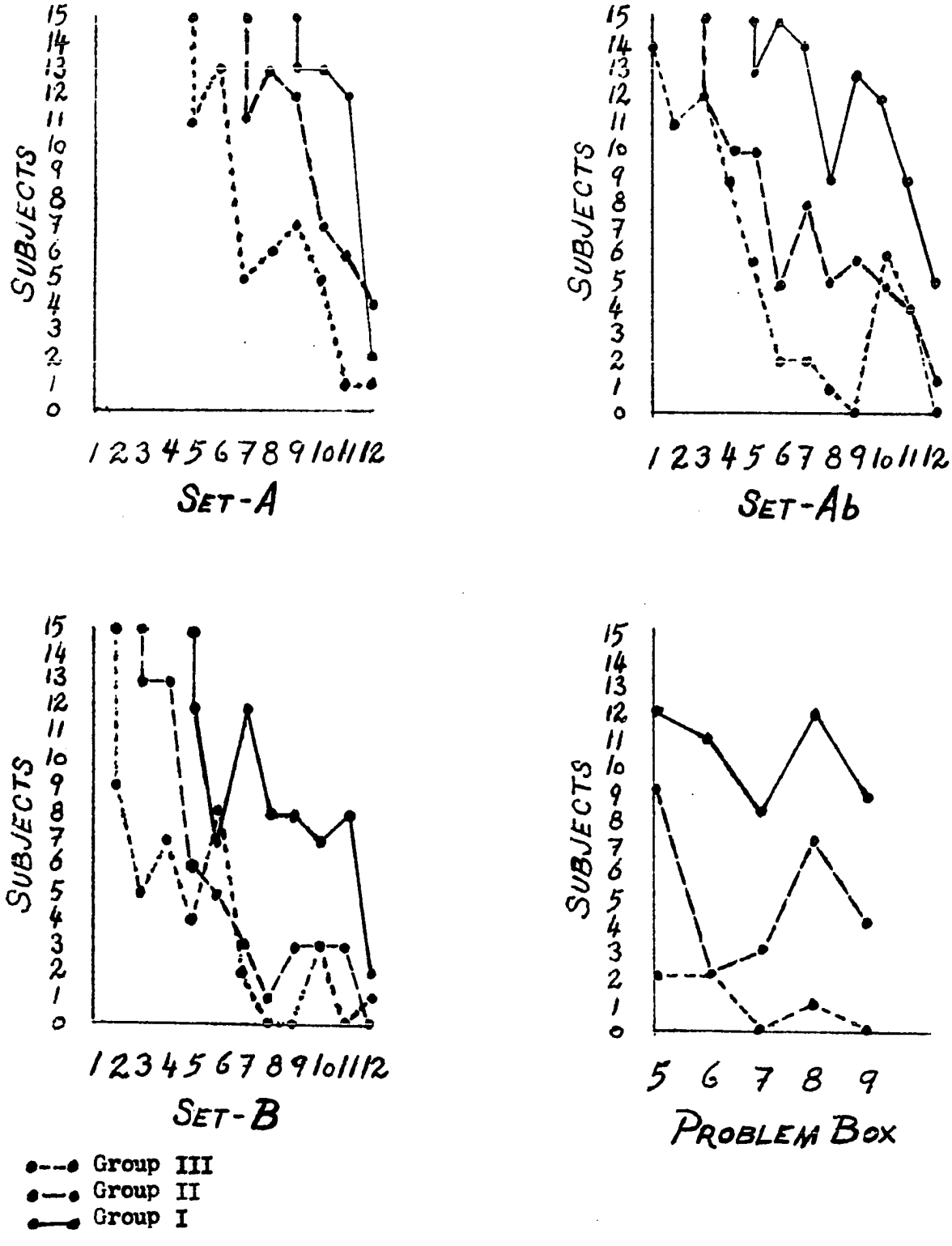

Figure 5. Performances of Group I, Group II, and Group III on the Coloured Progressive Matrices and the Problem Box.

CHAPTER IV

DISCUSSION

All hypotheses were tested at the .05 level of significance, two-tailed. Unless otherwise indicated, that is the level being considered in this discussion.

The primary purpose of this study was to compare performances on the Coloured Progressive Matrices and the Problem Box, respectively, of three groups of white eight-year-old youngsters who functioned at differing intellective levels as measured by the Stanford-Binet Intelligent Test. On both instruments, brights were found to perform significantly better than did the average and the high-grade mentally defective. On both instruments, the average were found to perform significantly better than did the high-grade mentally defective.

There are ten problems set up with the Problem Box. Problems 1-4 involve only first order generalizations in which a single clue such as shape, position, or color must be utilized in order to successfully solve the problem. Problems 5-10 are problems involving second order generalizations in which two variables must be utilized in order to successfully solve the problem. For the purposes of this

study only problems 5-9 of the Problem Box are being investigated. With a Group N of fifteen, using the Problem Box, there were 75 possible correct answers for each group.

Fifteen brights solved 52 of the 75 possible problems on the Problem Box. They verbalized generalizations of their solutions on 51 of the 52 correct solutions.

The fifteen average solved 25 of the 75 problems possible on the Problem Box. They gave verbal generalizations for 24 of the 25 correct solutions.

The group of fifteen high-grade mentally defective solved four of the 75 problems possible. They verbalized generalizations for three of the four problems they solved.

These performances seem to indicate not only the significant role of intelligence in problem-solving, but also indicate what would appear to be the significant function of generalization in the problem solving process. The relationship, if any, between the ability to do second order generalizations on the Problem Box and the ability to get past the stoppage points on the Coloured Progressive Matrices is one of considerable interest to this study.

With a Group N of fifteen, there were 540 possible correct answers for each group on the Coloured Progressive Matrices. Group I, fifteen brights, solved 433 of the 540 possible problems. Group II, fifteen average, solved 319 of the 540 possible. Group III, fifteen high-grade mentally

defective, solved 230 of the 540 possible. As mentioned earlier the difference in performance among the differing intellective levels appeared to be a further indication of the predictive value of intelligence as it pertains to problem solving.

Problem 5 of the Problem Box was selected for investigation because it is the first problem in the series of ten in which the subject must utilize two clues in order to solve the problem. It would appear that being able to successfully solve problem 5 of the Problem Box involves what Lashley (1938) termed second order generalizations. That is a generalization involving more than one variable. For example in problem 5, two variables, color and position, must be successfully utilized in order to solve the problem.

In regard to the Progressive Matrices, Raven (1960) says that the series are designed so that the initial problem in each set is self-evident, and the ones that follow become progressively more difficult. Raven (1965) notes that in administering the test, if the subject does not solve correctly problem A1, the examiner "continues his explanation until the nature of the problem to be solved is clearly grasped" [p. 16].

In Set A of the Coloured Progressive Matrices problem A8 was selected as a stoppage point problem. In problems 1-7 of Set A the correct response is presented in all

of the three other quadrants of the matrix. Problem A8 is the first problem in Set A which requires that the subject do anything other than select that which has already been presented. In order to select the correct piece to complete the pattern in problem A8, the child has to visualize something new, the intersection of two vertical and two horizontal lines. In the seven previous problems it has only been necessary for him to select the piece which is like the rest of the matrix.

According to Raven (1965), the problems in set Ab are ones "in which discrete figures could be apprehended as parts of an organized "whole," or individual entity, appropriately oriented to the observer and his perceptual field" [p. 8]. In Set Ab, problems 1, 2, and 3 require the subject to select the piece which is like the other three quadrants of the matrix. Problems 4-7 require the subject to select the piece which will complete the pattern of "whole". Problem Ab8 was selected as a stoppage point problem because it is at the same position in the Set as are problems A8 and B8 respectively, and Ab8 is the first problem in Set Ab which requires that the subject utilize clues involving both design and position in order to successfully complete the pattern or "whole".

Set B again starts with two problems in which the missing part is shown in three other quadrants. In problems

3 and 4, again clues involving design and position have to be utilized in order to successfully complete the pattern. These are also the primary clues to be utilized in solving problems 5, 6, and 7 of Set B. In these problems the piece that completes the matrix is presented in the other three quadrants in the matrix, but the position has to be changed in order to complete the pattern successfully. Stoppage point problem B8 is the first problem in which the subject must utilize clues from the other quadrants and complete the matrix with a piece different from the other quadrants. In this problem clues presented in the other quadrants must be combined in order to create a new or different piece which completes the pattern or "whole" correctly.

Twelve of the fifteen children in the bright group were able to solve stoppage point problem 5 of the Problem Box. Problem 5 is the first problem on the Problem Box requiring second order generalizations. All fifteen of the brights were able to solve stoppage point problem A8 on the Matrices. None of the fifteen solved stoppage point problem Ab8, and eight of the fifteen solved stoppage point problem B8 on the Matrices. One bright who did not solve stoppage point problem 5 on the Problem Box solved all of the stoppage point problems on the Matrices.

Nine of the fifteen children in the average group were able to solve stoppage point problem 5 on the Problem

Box. Thirteen of the average group solved stoppage point problem A8 of the Matrices. Five of the fifteen solved problem Ab8 and only one of the average solved stoppage point problem B8.

Only two of the fifteen high-grade mentally defective were able to solve stoppage point problem 5 on the Problem Box. Six of the high-grade mentally defective were able to solve stoppage point problem A8 of the Matrices. One high-grade mentally defective solved stoppage point problem Ab8. None of the high-grade mentally defective solved stoppage point problem B8 on the Matrices.

The only statistically significant difference between the bright and the average groups on the stoppage point problems was on problem B8 of the Coloured Progressive Matrices. There were statistically significant differences between the bright and the high-grade mentally defective groups on all the stoppage point problems. There were statistically significant differences between the average and the high-grade mentally defective groups on stoppage point problem 5 of the Problem Box and stoppage point problem A8 of the Matrices. There were no statistically significant differences between the average and the high-grade mentally defective on problems Ab8 and B8 of the Matrices. Only five of the average and one of the high-grade mentally defective solved problem Ab8. Only one average and no high-grade men-

tally defective solved problem B8 of the Matrices.

It would appear that if subjects were unable to handle second order generalizations as evidenced by failing problem 5 of the Problem Box, they were not likely to be successful on the Coloured Progressive Matrices. It seems that the Coloured Progressive Matrices presents too many problems which are essentially the same, and therefore fails to discriminate. The scale is not progressive as evidence by the fact that so many problems are alike, and that for none of the groups is the progression from success to failure a continuous one. There was no discrimination between the bright and the average until Set B. Of the stoppage point problems investigated in this study the only significant difference between the bright and the average was on stoppage point problem B8 on the third set of the Matrices. Both the bright and the average were able to do second order generalizations as evidenced by their success on problem 5 of the Problem Box. There were of course differences between the bright and the high-grade mentally defective, but these do little more than substantiate what one would know by observation. There was a significant difference between the average and the high-grade mentally defective on problem 5 of the Problem Box and on problem A8 of the Matrices. Since so few of either group solved problems Ab8 or B8 on the Matrices it would appear that the Problem Box discrimi-

nates better between the average and the high-grade mentally defective than does the Coloured Progressive Matrices.

CHAPTER V

SUMMARY, CONCLUSIONS, AND RECOMMENDATIONS

This investigation was conducted to compare the performance of very bright, average, and high-grade mentally defective white eight-year-old children attending the public schools in the vicinity of Norman, Oklahoma, on the Problem Box and the Coloured Progressive Matrices, respectively. A total of fourty-five children, fifteen very bright, fifteen average, and fifteen high-grade mentally defective were individually administered the Problem Box and the Coloured Progressive Matrices. A comparative analysis was made of the performance of the three groups on stoppage point problems A8, Ab8, and B8 on the Coloured Progressive Matrices and problem 5 of the Problem Box.

The Mann-Whitney U Test was used to test for significant differences between the three groups on the Problem Box and the Coloured Progressive Matrices, respectively. The findings which resulted from the evaluation of the data were: 1) Statistically significant differences beyond the .05 level occurred between the bright and the average regarding the number of problems solved on the Problem Box, the number of problems solved and verbalized on the Problem Box,

the number of problems solved and verbalized on the Problem Box, and the number of problems solved on the Coloured Progressive Matrices. 2) Statistically significant differences beyond the .05 level occurred between the bright and the high-grade mentally defective regarding the number of problems solved on the Problem Box, the number of problems solved and verbalized on the Problem Box, and the number of problems solved on the Coloured Progressive Matrices. 3) Statistically significant differences beyond the .05 level occurred between the average and the high-grade mentally defective regarding the number of problems solved on the Problem Box, the number of problems solved and verbalized on the Problem Box, and the number of problems solved on the Coloured Progressive Matrices.

The Chi-Square Test for Two Independent Samples with the Yates correction for continuity to correct for smaller expected frequencies was used to test for significant differences between the three groups on stoppage point problems A8, Ab8, and B8 of the Coloured Progressive Matrices and problem 5 of the Problem Box. The findings which resulted from the evaluation of the data were: 1) No statistically significant differences were apparent between the bright group and the average group in solving stoppage point problem 5 of the Problem Box or stoppage point problems A8 and Ab8 of the Coloured Progressive Matrices. A statistically

significant difference beyond the .05 level occurred between the bright group and the average group on stoppage point problem B8 of the Coloured Progressive Matrices. 2) Statistically significant differences beyond the .05 level occurred between the bright and the high-grade mentally defective on stoppage point problem 5 of the Problem Box and stoppage point problems A8, Ab8, and B8 of the Coloured Progressive Matrices. 3) Statistically significant differences at the .05 level occurred between the average and the high-grade mentally defective on stoppage point problem 5 of the Problem Box and stoppage point problem A8 of the Coloured Progressive Matrices. No statistically significant differences were apparent between the average group and the high-grade mentally defective group on stoppage point problems Ab8 and B8 on the Coloured Progressive Matrices.

Conclusions

The statistically significantly better performance by the brights over the average and the high-grade mentally defective, and the statistically significantly better performance of the average over the high-grade mentally defective support other studies in the literature which have found intelligence to be a good predictor of non-language problem solving ability. It is interesting to note that of the total eighty-one correct solutions by the three groups only three, one by each group, were not verbalized. Thus

it would appear that being able to make generalizations is a significant part of the problem solving process as few problems, only three of eighty-one, were correctly solved without verbalizing the correct generalization.

It would appear that subjects utilized a wide variety of clues in solving problems. The performance of the three groups on the stoppage point problems indicated that as it became necessary to utilize additional clues some subjects were not successful. It would appear that at some point the problem solving process breaks down as the number of clues which must be utilized increased. The high-grade mentally defective tended to perseverate in their responses to problems. That is if the solution to the first problem on the Problem Box was the square even though the examiner told them that the next problem was different, their usual response was to again push the button by the square. If subjects were unable to do second order generalizations as evidenced by solving problem 5 of the Problem Box, they were not likely to get past the second and third sets of the Coloured Progressive Matrices. It would appear that this breakdown in the problem solving process may result in a barrier to learning. Intelligence was found to be a good predictor of success in extending the point of failure in the problem solving process.

Recommendations for Further Research

Although Raven's Coloured Progressive Matrices has been widely used in England, it has not been as extensively used in this country. Because of the test's ease of administration and its non-language aspect, it has generated considerable interest among those in education in this country. Teska (1942) invented the Problem Box to measure problem solving ability. His study and subsequent studies using it indicate that it is an effective means of measuring problem solving ability. There are many possibilities for the design of new studies using these instruments.

At this time norms for the Coloured Progressive Matrices have been established for an English population. An extremely valuable contribution on both the Coloured Progressive Matrices and the Problem Box could be made in establishing norms for a population in this country.

A study of the relationships between stoppage points on the Coloured Progressive Matrices and problem solving for the three I.Q. groups would be another interesting topic. Although these relationships were not investigated in the present study, their existence was evident.

There are many comparative studies involving the Coloured Progressive Matrices and the Problem Box which might be done. One would be a comparison of the performance of

three groups of children of different ages having the same M.A. using the Problem Box and the Coloured Progressive Matrices.

Studies involving blacks and varying socio-economic levels in this country have been done with the Problem Box. An interesting study would be a comparison of the performance of low socio-economic white, low socio-economic black, and high socio-economic children of average intelligence on the Problem Box and the Coloured Progressive Matrices.

Much could be gained from a well-controlled, carefully designed research project on the predictive validity of the Problem Box and the Coloured Progressive Matrices. Studies of this sort would increase greatly the usefulness of the instruments.

Other research studies could be founded on statistical analysis of the responses given on the Coloured Progressive Matrices and the Problem Box. Of particular interest would be an analysis of the type of errors made.

REFERENCES

Aarons, Leon. Serial learning and generalizing abstraction. American Journal of Psychology, 1933, 45, 417-432.

Alexander, W. P. Intelligence, concrete and abstract. British Journal Psychological Monographs Supplements, 1935, No. 19.

Alpert, Augusta. The solving of problems situation by preschool children. New York: Bureau of Publications, Teachers College, Columbia University, 1928.

Bacon, Francis. Novum organum. Chicago: Henry Regnery Co., copyright 1949.

Bedell, R. C. The relationship between ability to recall and the ability to infer in specific learning situation. Bulletin of Northeastern Missouri State Teachers College, 1934, 34, No. 9, 55.

Billings, M. L. Problem solving in different fields of endeavor. American Journal of Psychology, 1934, 46, 259-272.

Blake, Kathryn A., and Williams, Charlotte L. Induction and deduction and retarded, normal, and superior subjects' concept attainment. American Journal of Mental Deficiency, 1963, 73, 226-231.

Broady, L. Comparable tests of verbal and non-verbal reasoning; their construction and application to developmental problems. Journal of Educational Psychology, 1940, 31, 180-194.

Burtt, Harold E. A study of the behavior of the white rat by the multiple choice method. Journal of Animal Behavior, 1916, 6, 222-246.

Coburn, C. A., and Yerkes, R. M. A study of the behavior of the Crow Corvus Americanus and by the multiple-choice method. Journal of Animal Behavior, 1915, 5, 75-114.

Danneffel, George J. A comparison of the non-language multiple-choice problem solving ability of very bright, average, and high-grade mentally defective eight-year-old children. Unpublished Ph.D. dissertation, University of Oklahoma, 1972.

De Sanctis, Sante. Visual apprehension in the maze behavior of normal and feeble-minded children. Journal of General Psychology, 1931, 39, 463-469.

Dewey, John. How we think. Boston: D. C. Heath and Co., 1910.

Dewey, John. How we think. (2nd ed.) Boston: D. C. Heath and Co., 1933.

D'Zurilla, Thomas J., and Goldfried, Marvin R. Problem solving and behavior modification. Journal of Abnormal Psychology, 1971, 78, 107-126.

Eagleson, W. W. A study of puzzle solving. Journal of Psychology, 1940, 9, 259-268.

Ewert, P. H., and Lambert, J. F. Part II, the effect of verbal instruction upon the formation of a concept. Journal of Genetic Psychology, 1932, 6, 400-413.

Gagnè, R. M. Problem Solving: Research, Method, and Theory. Edited by Benjamin Kleinmuntz. New York: John Wiley and Co., Inc., 1966, pp. 128-148.

Gellermann, Louis W. The double alternation problem II. The behavior of children and human adults in a double alternation temporal maze. Journal of Genetic Psychology, 1931, 39, 197-226.

Gerjuoy, I. R. Discrimination learning as a function of the similarity of the stimulus name. Unpublished doctoral dissertation, Iowa State University, 1953.

Gould, M. C., and Perrin, F. A. C. A comparison of factors involved in the maze learning of human adults and children. Journal of Experimental Psychology, 1916, 1, 122-154.

Gozali, Joav. Impulsivity-reflectivity as problem solving styles among educable mentally retarded children. American Journal of Mental Deficiency, 1969, 73, 864867.

Graham, J. L. An experiment in generalizing: a universal problem. Journal of Experimental Psychology, 1938, 23, 96-100.

Guilford, J. P. The nature of human intelligence. New York: McGraw-Hill Book Co., 1967.

Hamilton, G. V. A study of trial and error reactions in mammals. Journal of Animal Behavior, 1911, 1, 33-36.

Harter, G. L. Overt trial and error in the problem solving of preschool children. Journal of Genetic Psychology, 1930, 45, 361-372.

Harter, Susan. Discrimination learning set in children as a function of IQ and MA. Journal of Experimental Child Psychology, 1965, 2, 31-41.

Harter, Susan. Mental age, IQ, and motivational factors in the discrimination learning set performance of normal and retarded children. Journal of Experimental Child Psychology, 1967, 5, 123-141.

Hazlitt, Victoria. Children's thinking. British Journal of Psychology, 1933, 45, 663-677.

Heath, Paul Allen. A comparative study in problem solving ability of a group of negro and white children of average intelligence by socio-economic level. Unpublished Ed.d. dissertation, University of Oklahoma, 1970.

Heidbreder, E. Problem solving in children and adults. Journal of Genetic Psychology, 1928, 35, 522-545.

Hensley, Horace Gene. A comparative study in problem solving of bright and dull children. Unpublished Ph.D. dissertation, University of Oklahoma, 1957.

Hicks, V. C., and Carr, H. A. Humanreactions in a maze. Journal of Animal Behavior, 1912, 2, 980125.

House, Betty J., and Zeaman, David. A comparison of discrimination learning in normal and mentally defective children. Child Development, 1958, 29, 411-416.

Hull, C. L. Quantitative aspects of the evolution of concepts. Psychological Monographs, 1920, No. 28, 5-6.

Husband, R. W. A comparison of human adults and white rats in maze learning. Journal of Comparative Psychology, 1929, 9, 361-377.

Jeffrey, W. E. Simultaneous and successive presentation of stimuli in discrimination learning with children. American Psychology, 1958, 13, 333.

Johnson, Donald M. The psychology of thought and judgement. New York: Harper and Brothers, 1955.

Kohler, W. The mentality of apes. New York: Harcourt-Brace and Co., 1925.

Lashley, K. S. The mechanism of vision: XV. preliminary studies of the rat's capacity for detail vision. The Journal of General Psychology, 1938, 18, 123-193.

Lehtiö, Pekka K. The organization of component decisions in visual search. Acta Psychologica-European Journal of Psychology, 1970, 33, 93-105.

Lipton, Cheryl., and Overton, Willis F. Anticipatory imagery and modified anagram solutions: a developmental study. Child Development, 1971, 42, 615-623.

Long, L., and Welch, L. The development of the ability to discriminate and match numbers. Journal of Genetic Psychology, 1941, 59, 377-387.

Lumley, Frederick. An investigation of the responses made in learning a multiple choice maze. Psychological Monographs, 1931, 32, No. 189.

Maier, N. R. G. Reasoning in children. Journal Comprehensive Psychology, 1936, 21, 357-366.

Matheson, E. A study of problem solving behavior in preschool children. Child Development, 1931, 2, 242-262.

Mattson, M. L. The relation between the complexity of the habit to be acquired and the form of the learning curve in young children. Genetic Psychology Monographs, 1933, 13, 299-398.

McGinnis, E. The acquisition and interference of motor-habits in young children. Genetic Psychological Monographs, 1929, 6, 209-311.

Merrifield, P. R., Guilford, J. P., Christensen, P. R., Frick, J. W. The role of intellectual factors in problem solving. Psychological Monographs, 1962, 76, 1-20.

Moffitt, Alan R., and Coastes, Brian. Problem-solving strategies and performance of severely retarded children. American Journal of Mental Deficiency, 1969, 73, 774-784.

Moore, T. V. The reasoning ability of children in the first years of school life. Studies in Psychology and Psychiatry, 1929, 29, No. 2.

Mussen, Paul H. (Ed.) Handbook of research methods in child development. New York: John Wiley and Sons, Inc., 1960.

Norcross, K. J. Effects on discrimination performance of similarity of previously acquired stimulus names. Journal Experimental Psychology, 1958, 56, 305-309.

Penrose, L. S. and Raven, J. C. A new series of perceptual tests: preliminary communication. British Journal of Psychology (Medical Section), 1936, 16, Part 2, 97-105.

Pepper, Sidney. Verbalization of problem-solving behavior. Unpublished Ph.D. dissertation, University of Oklahoma, 1966.

Peterson, J. Experiments in rational learning. Psychological Review, 1918, 25, 443-467.

Pyle, W. H. An experimental study of the development of certain aspects of reasoning. Journal of Educational Psychology, 1935, 26, 539-546.

Raven, John C. Human nature its development, variations and assessment. London: H. K. Lewis & Co., Ltd., 1952.

Raven, J. C. Guide to using Progressive Matrices (1938) Sets A, B, C, D, and E. London: H. K. Lewis & Co.

Raven, J. C. Guide to using Progressive Matrices (1947) Sets A, Ab, B. London: H. K. Lewis & Co., Ltd.

Raven, John C. Guide to using the Coloured Progressive Matrices, Sets A, Ab, B (Revised Order, 1956). London: H. K. Lewis & Co., Ltd., 1965.

Raven, John C. Coloured Progressive Matrices, Sets A, Ab, B (Revised Order 1956). London: H. K. Lewis and Co., Ltd., reprinted 1966.

Ray, J. J. The generalizing ability of dull, bright, and superior children. Peabody Contribution to Education, 1936, No. 175.

Roberts, K. E. The ability of preschool children to solve problems in which a single principle of relationship is kept constant. Journal of Genetic Psychology, 1932, 40, 118-135.

Roslow, S. A statistical analysis of rational learning problems. Journal of Genetic Psychology, 1936, 48, 441-467.

Ruger, H. A. The psychology of efficiency. Archives of Psychology, 1940, No. 249, 58.

Sargent, S. S. The psychology of efficiency. Archives of Psychology, 1940, 249, 58.

Sells, S. B. The atmosphere effect: an experimental study of reasoning. Archives of Psychology, 1936, 29, No. 200.

Siegel, Sidney, Nonparametric statistics for the behavioral sciences. New York: McGraw-Hill Book Co., 1956.

Smoke, Kenneth L. An objective study of concept formation. Psychological Monographs, 1932, 42, No. 191, 1-40.

Spearman, C. The abilities of man: their nature and measurement. New York: The Macmillan Company, 1927.

Stark, James J. Jr. The problem-solving ability of a group of hard of hearing children of average intelligence. Unpublished doctoral dissertation, University of Oklahoma, 1972.

Stephens, Wyatt E. A comparison of the performance of normal and subnormal boys and structured categorization tasks. Exceptional Children, 1964, 30, 311-315.

Stephens Wyatt E. Category usage by normal and mentally retarded boys. Child Development, 1966, 37, 355-361.

Stephens, Wyatt E. Labeling errors of mentally subnormal children in a concept task. American Journal of Mental Deficiency, 1968, 73, 273-278.

Stevenson, Harold W., Klein, Robert E., Hale, Gordon A., and Miller, Leon K. Solution of anagrams: a developmental study. Child Development, 1968, 39, 905-912.

Stevenson, H. W., and Ziegler, E. G. Probability learning in children. Journal of Experimental Psychology, 1958, 56, 185-192.

Stevenson, W. Tetrad differences for verbal and non-verbal sub-tests. American Journal of Educational Psychology, 1931, 22.

Symonds, Percival M. Education and the psychology of thinking. New York: McGraw-Hill Book Co., 1936.

Terman, Lewis M., and Merrill, Maud A. Stanford-Binet Intelligence Scale. Manual for the third revision form L-M. Boston: Houghton Mifflin Co., 1960.

Terrell, G., Jr., and Kennedy, W. A. Discrimination learning and transposition in children as a function of the nature of the reward. Journal of Experimental Psychology.

Teska, Percy T. Performance of dull and bright children in a non-language multiple-choice problem situation. Unpublished Ph.D. dissertation, University of Wisconsin, 1942.

Vickers, W., and Hoskins, V. H. Results from some new tests of practical abilities. British Journal of Psychology, 1929, 20, 66-81.

Vinacke, W. Edgar. The psychology of thinking. New York: McGraw-Hill Book Co., 1952.

Wenger, M. A. Path-selection behavior of young children in body-mazes. Journal of Experimental Education, 1933, 2, 197-236.

Wieg, E. L. Bi-lateral transfer in the motor learning of young children and adults. Child Development, 1932, 3, 247-268.

Wilkins, M. C. The effect of changed material on ability to do formal syllogistic reasoning. Archives of Psychology, 1928, 16, No. 102, 83.

Winch, W. H. Children's reasonings: experimental studies of reasoning in school children. Journal of Experimental Psychology, 1921-22, 6, 122-141.

Yerkes, R. M. The study of human behavior. Science, 1914, 39, 625-633.

Yerkes, R. M. Methods of exhibiting reactive tendencies characteristic of ontogenetic and phylogenetic stages. Journal of Animal Behavior, 1917, 7, 11-18.

Yerkes, R. M. A new method of studying the ideational behavior of defective and deranged as compared with normal individuals. Journal of Comparative Psychology, 1921, 1, 369-394.

Yerkes, R. M., and Coburn, C.A. A study of the behavior of the Pig Sus Scrofa by the multiple-choice method. Journal of Animal Behavior, 1915, 5, 185-225.

Yerkes, R. M., and Rossy, Cecelio S. A point scale for measurement of intelligence in adolescent and adult individuals. Boston Medical and Surgical Journal, 1917, 176, 564-573.

APPENDIX

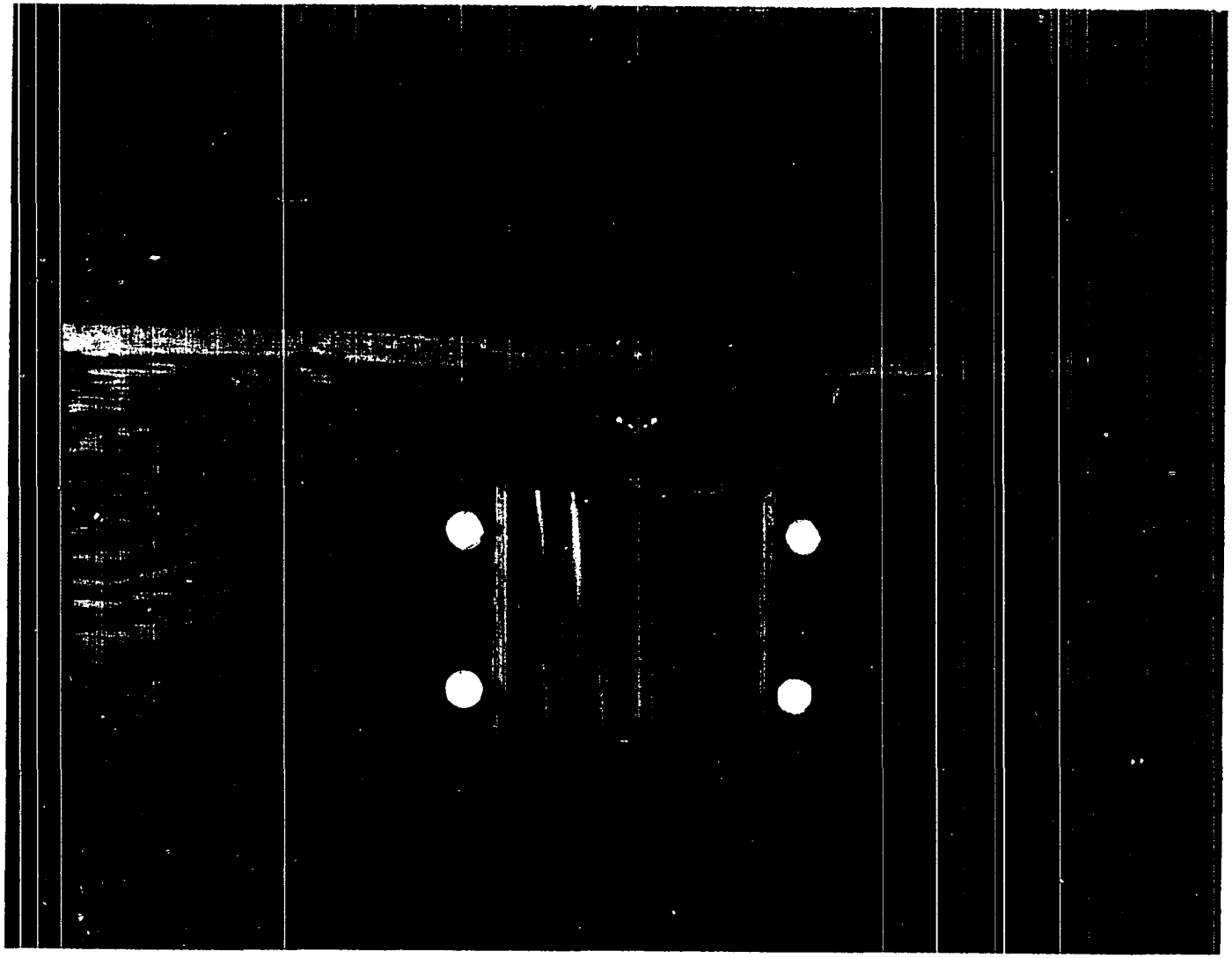

Figure 1. Front view of the Problem Box

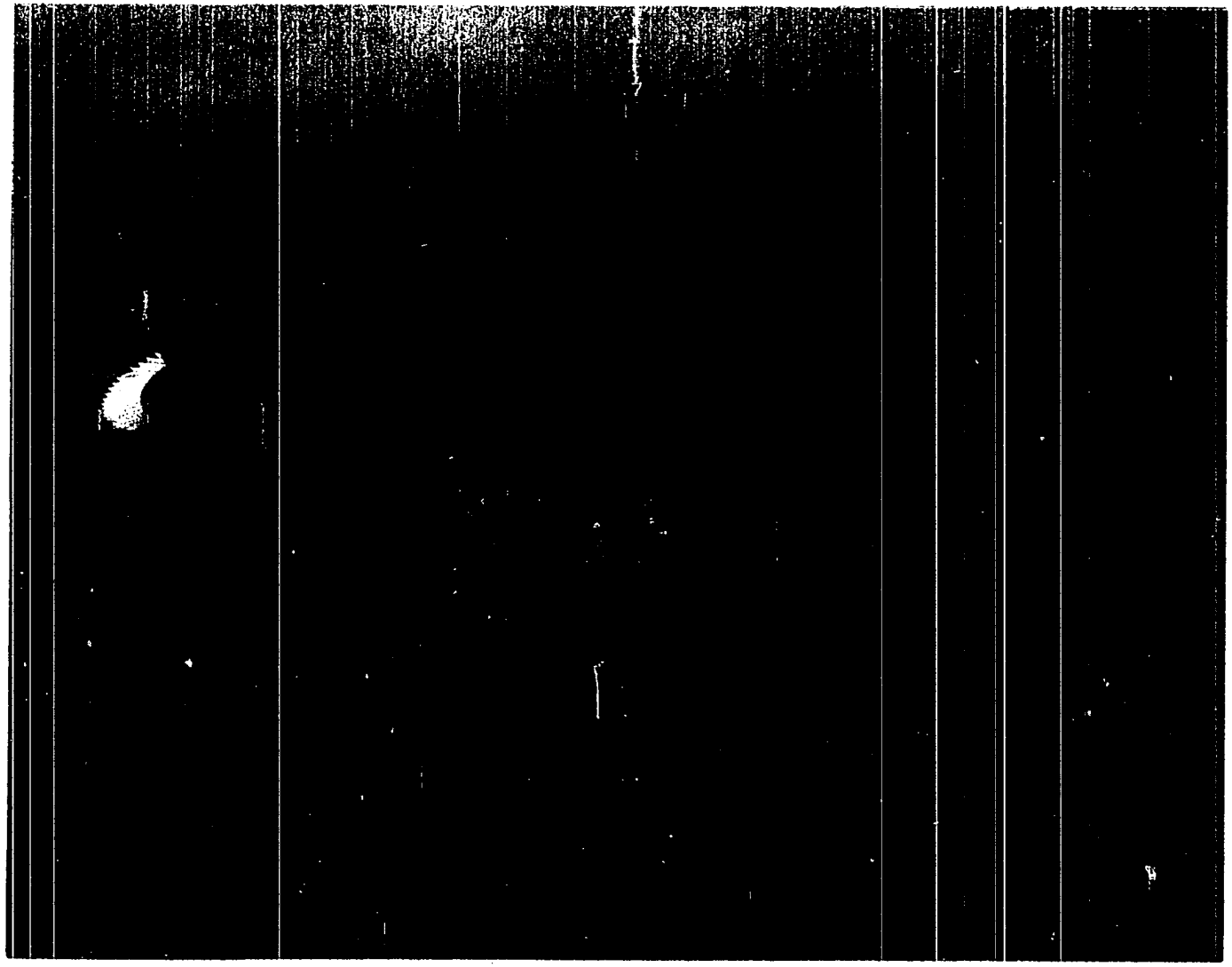

Figure 2. Side view of the Problem Box

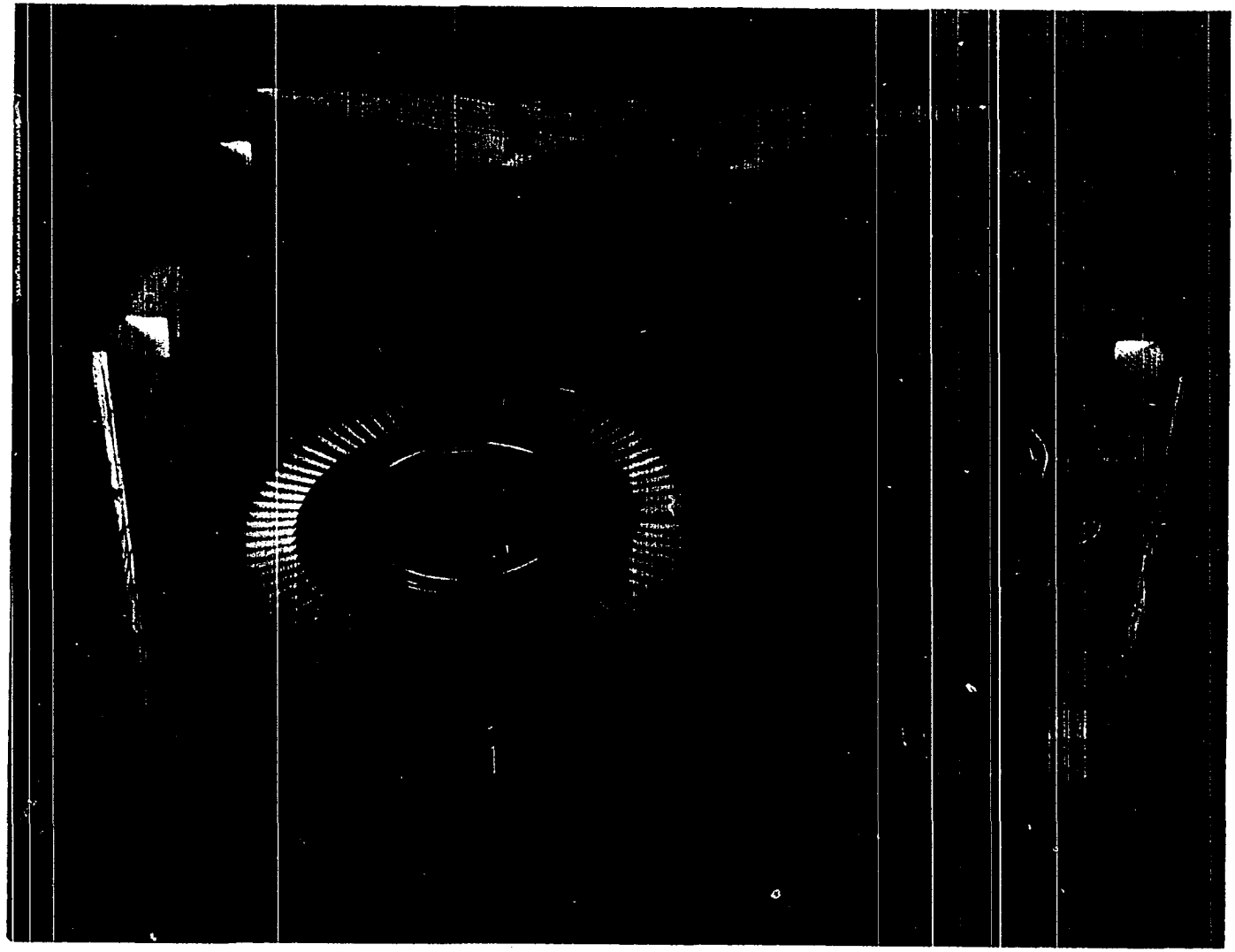

Figure 3. Inside mechanism of the Problem Box

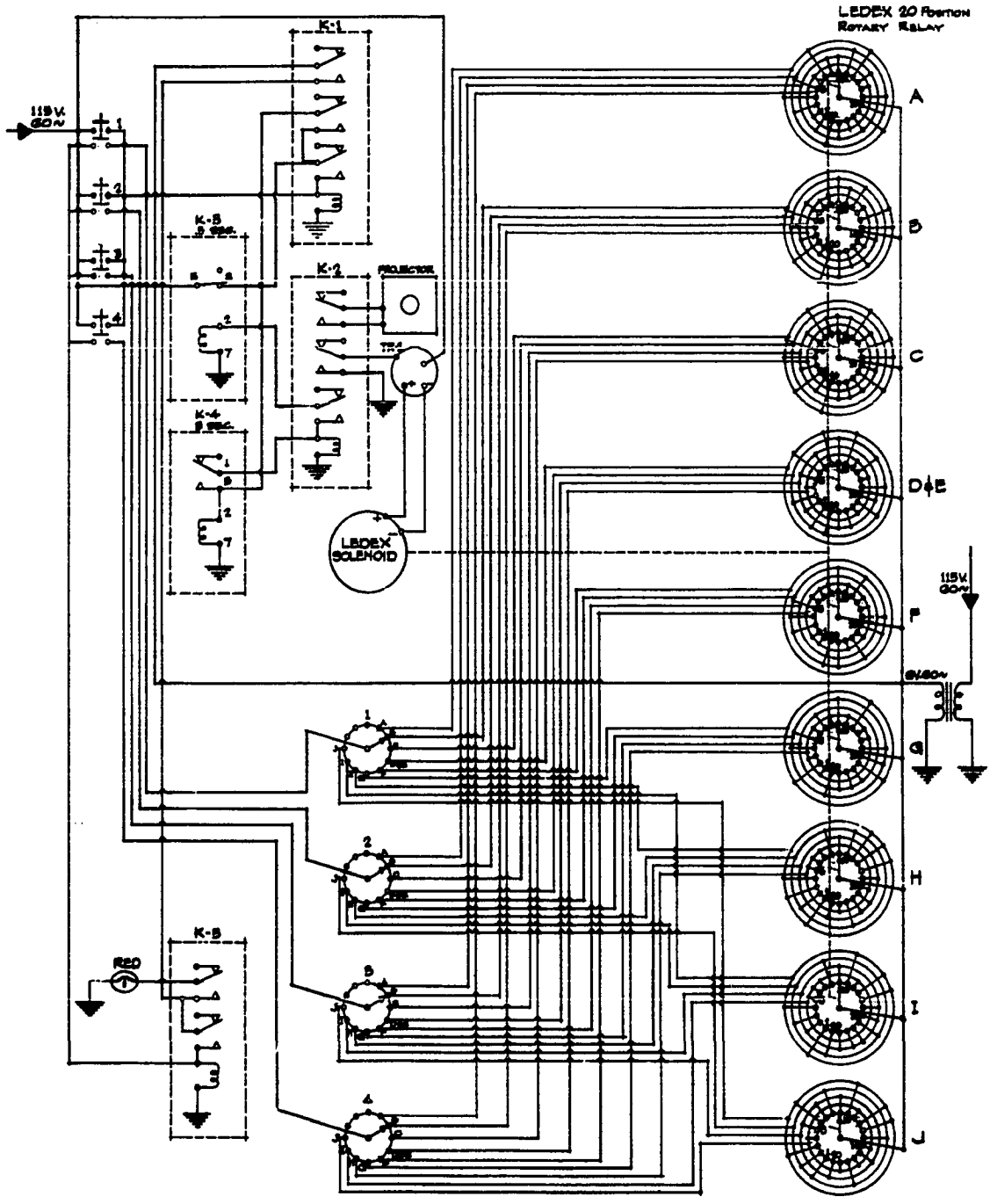

Figure 4. Electrical Schematic Diagram of the Problem Box