71-12,570

HALUSKA, Jerry Lee, 1942-
BINARY MOLECULAR DIFFUSION IN NON-IDEAL SOLUTIONS OF CYCLIC COMPOUNDS.

The University of Oklahoma, Ph.D., 1970
Engineering, chemical

University Microfilms, A XEROX Company, Ann Arbor, Michigan

THIS DISSERTATION HAS BEEN MICROFILMED EXACTLY AS RECEIVED

Downloaded from SHAREOK. Persistent Handle URL: https://hdl.handle.net/11244/2923

THE UNIVERSITY OF OKLAHOMA

GRADUATE COLLEGE

BINARY MOLECULAR DIFFUSION IN NON-IDEAL SOLUTIONS OF CYCLIC COMPOUNDS

A DISSERTATION

SUBMITTED TO THE GRADUATE FACULTY

in partial fulfillment of the requirements for the

degree of

DOCTOR OF PHILOSOPHY

BY

JERRY LEE HALUSKA

Norman, Oklahoma

1970

BINARY MOLECULAR DIFFUSION IN NON-IDEAL

SOLUTIONS OF CYCLIC COMPOUNDS

APPROVED BY:

C. Phillip Colver

Frank B. Canfield

William N. Huff

Kenneth E. Starling

F. Mark Townsend

ACKNOWLEDGMENTS

Without the assistance of a number of people, this work could not have been successfully completed. Among those who have contributed, I would like to express my sincere gratitude to the following persons:

Dr. C. P. Colver -- for serving as chairman of my dissertation committee.

Dr. F. M. Townsend, Dr. K. E. Starling, Dr. F. B. Canfield, Dr. W. N. Huff, and Dr. C. E. Springer for being members of my advising committee.

Mr. Charles J. Vadovic, for his encouragement and able assistance during the preparation of this manuscript.

Mr. Abbas Alimadadian and Mr. L. D. Clements for their many valuable suggestions during various phases of this research.

Mr. Walt Ford for his assistance in obtaining experimental data.

I am grateful to the National Aeronautics and Space Administration and to the Phillips Petroleum Company for graduate fellowship support. Funds provided for the experimental apparatus and operating expenses under Research Grant

No. GK 1023 by the National Science Foundation are also gratefully acknowledged.

Finally, I wish to express my deepest appreciation to my mom and dad and also to my wife, Kathryn.

ABSTRACT

Binary molecular diffusion coefficients were measured as a function of concentration for the systems toluene-methylcyclohexane and toluene-aniline at temperatures of 25°, 45°, and 60° C and for the system aniline-methylcyclohexane at 60° C. These systems were chosen for their structural similarity and their non-ideality. The diffusion apparatus consisted of a double Savart plate birefringent interferometer, a constant temperature air bath, and a flowing junction diffusion cell. Viscosity, density, and refractive index data were also measured.

Data on the sucrose-water system were measured at 25° C in order to confirm the experimental technique as well as the data reduction method. These values were in excellent agreement with the data of other investigators. At a concentration of 0.75 grams sucrose per one hundred milliliters of solution, three determinations were performed which yielded an average absolute deviation of 0.17 per cent about their mean value of 5.17×10^{-6} $cm.^2/sec.$

The diffusion coefficients at infinite dilution conditions were compared to several published correlations, and it was found

that no one predictive equation yielded satisfactory results. Also, the ratios of the infinite dilution coefficients of two solutes in a common solvent were calculated. In general, for the systems studied here, these ratios were approximately unity, which is in agreement with the theories of Bearman and Gainer.

An equation for the prediction of the concentration dependence of the diffusion coefficient was developed. This expression which is based on the variation of the friction coefficient with composition, successfully correlates the data obtained in this study.

TABLE OF CONTENTS

Page

LIST OF TABLES ix

LIST OF ILLUSTRATIONS xii

Chapter

I. INTRODUCTION 1

II. LITERATURE SURVEY 7

III. EXPERIMENTAL APPARATUS 39

IV. EXPERIMENTAL PROCEDURE 55

V. EQUATION DEVELOPMENT 73

VI. EXPERIMENTAL RESULTS AND DISCUSSION 81

VII. SUMMARY 101

LITERATURE CITED 104

NOMENCLATURE 111

APPENDICES

A. BOUNDARY FORMATION 114

B. DATA REDUCTION TECHNIQUE 117

C. COMPUTER PROGRAM 122

D. DETERMINATION OF ACTIVITY GRADIENTS FROM THERMODYNAMIC DATA 130

APPENDICES Page

E. VISCOSITY, DENSITY, AND REFRACTIVE INDEX MEASUREMENTS 135

F. COMPARISONS OF PREDICTIVE EQUATIONS WITH EXPERIMENTAL DATA. 146

LIST OF TABLES

Table		Page
1.	Mutual Diffusion Coefficients for the Sucrose-Water System at 25°C.	71
2.	Molecular Diffusion Coefficients for the Toluene-Methylcyclohexane System at 25°C.	82
3.	Molecular Diffusion Coefficients for the Toluene-Methylcyclohexane System at 45°C.	83
4.	Molecular Diffusion Coefficients for the Toluene-Methylcyclohexane System at 60°C.	84
5.	Molecular Diffusion Coefficients for the Toluene-Aniline System at 25°C.	85
6.	Molecular Diffusion Coefficients for the Toluene-Aniline System at 45°C.	86
7.	Molecular Diffusion Coefficients for the Toluene-Aniline System at 60°C.	87
8.	Molecular Diffusion Coefficients for the Methylcyclohexane-Aniline System at 60°C.	88
9.	Comparison of Diffusion Rates at Infinite Dilution for a Common Solvent	97
10.	Comparison of Diffusion Rates at Infinite Dilution for a Common Solute.	99
C-1.	Gauss Newton Nonlinear Least Squares Program for Data Reduction.	123
D-1.	Wilson Parameters.	134
E-1.	Densities and Viscosities of Toluene-Methylcyclohexane Mixtures at 25°C.	136

Table Page

E-2. Densities and Viscosities of Toluene-Methylcyclohexane Mixtures at 45° C. 137

E-3. Densities and Viscosities of Toluene-Methylcyclohexane Mixtures at 60° C. 138

E-4. Densities and Viscosities of Toluene-Aniline Mixtures at 25° C. 139

E-5. Densities and Viscosities of Toluene-Aniline Mixtures at 45° C. 140

E-6. Densities and Viscosities of Toluene-Aniline Mixtures at 60° C. 141

E-7. Densities and Viscosities at Methylcyclohexane-Aniline Mixtures at 60° C. 142

F-1. Comparison of Experimental Infinite Dilution Diffusion Coefficients to Predicted Values 147

F-2. Comparison of Experimental Infinite Dilution Diffusion Coefficients with Predicted Values . . . 148

F-3. Comparison of Experimental Infinite Dilution Diffusion Coefficients with Predicted Values . . . 149

F-4. Comparison of Diffusion Data with Concentration Correlations 150

F-5. Comparison of Diffusion Data with Concentration Correlations 151

F-6. Comparison of Diffusion Data with Concentration Correlations 152

F-7. Comparison of Diffusion Data with Concentration Correlations 153

F-8. Comparison of Diffusion Data with Concentration Correlations 154

F-9. Comparison of Diffusion Data with Concentration Correlations 155

Table Page

F-10. Comparison of Diffusion Data with Concentration Correlations 156

F-11. Comparison of Diffusion Data with Concentration Correlations 157

F-12. Comparison of Diffusion Data with Concentration Correlations 158

LIST OF ILLUSTRATIONS

Figure		Page
1.	Interferometer Optical Arrangement	42
2.	Flowing Junction Test Cell	46
3.	Photographs of Initial Interface and Interference Patterns	64
4.	Illustration of Measurement Performed on Each Interference Pattern	66
5.	Diffusion Coefficients for the Sucrose-Water System at 25° C	72
6.	Comparison of Experimental Values of Diffusion Coefficients for the Toluene-Methylcyclohexane System to Predicted Values by Equation (95)	89
7.	Comparison of Experimental Values of Diffusion Coefficients for the Toluene-Aniline System to Predicted Values by Equation (95)	90
8.	Comparison of Experimental Values of Diffusion Coefficients for the Methylcyclohexane-Aniline System to Predicted Values by Equation (95)	91
A-1.	Schematic Diagram of Cell Assembly	115
C-1.	Logic Diagram for the Data Reduction Programs	127
C-2.	Example of a Raw Data Plot	128
E-1.	Refractivity of Toluene-Methylcyclohexane Solution at 25° C	143
E-2.	Refractivity of Toluene-Aniline Solution at 25° C	144
E-3.	Refractivity of Methylcyclohexane-Aniline Solution at 60° C	145

BINARY MOLECULAR DIFFUSION IN NON-IDEAL SOLUTIONS OF CYCLIC COMPOUNDS

CHAPTER I

INTRODUCTION

Molecular diffusion may be defined as the movement of molecules, in the absence of external forces, such that concentration irregularities within a fluid are dissipated until a state of thermodynamic equilibrium is established.

Research in the important field of diffusion in liquids has expanded markedly in recent years as the result of both practical and theoretical incentives. The necessity of reliable values for diffusion coefficients in commercial processes is well established. However, since estimates of diffusion coefficients are often in great error at most conditions of practical interest, a need for both reliable data and accurate predictive techniques exists. This need has increased with the evolution of computer design methods which utilize mathematical modeling techniques for mass transport processes. In fact,

it has been suggested that the use of increasingly sophisticated models in mass transport will be quite pointless unless an accurate account of the variation of diffusion coefficients with concentration is made (88).

The diffusion process is important in many aspects of chemical engineering practice and is often the factor which determines the overall rate of a process. In catalysis the transport of a reactant to an activation site plays a prominent role in determining the overall reaction rate. In absorption, mass transfer across an interface is important. In operations involving bulk flow and turbulent mixing, diffusion in the boundary layer must often be considered. Furthermore, recent advances in biochemistry and bioengineering have also emphasized the need for more accurate descriptions of molecular transport. Biological processes are highly dependent upon the diffusive transfer of mass throughout the organism. Thus, from practical viewpoints, the experimental and theoretical descriptions of the diffusion process are necessary.

A satisfactory theory of the liquid state must provide an explanation of the diffusion process. Therefore, studies of liquid diffusion yield information which is most useful in testing these theories. Despite the efforts of a considerable number of investigators, the development of an adequate model for liquids has lagged far behind similar developments for the

gaseous and solid states. Available expressions are only approximate and are usually semiempirical in nature. The most recent progress toward an understanding of the liquid state has been achieved through the application of statistical mechanics. Although some significant advances have been made, a definitive theoretical explanation is yet to be uncovered.

The testing and refinement of existing models and the development of better predictive diffusion equations have been consistently hampered by the absence of truly reliable experimental data. To further complicate matters, existing data is often contradictory or is presented at only one or possibly two temperatures. As such, precise conclusions cannot be made.

Consequently, reliable experimental diffusion coefficient data are necessary for their use in calculations involving fundamental mass transfer operations, the development of an accurate liquid state theory, and the refinement of predictive equations.

The present investigation is, therefore, concerned with binary molecular diffusion in liquid systems. The first objective of this work was the modification and refinement of the existing birefringent interferometric apparatus. In order to improve the accuracy of the experimental results, changes were made in each major component of the apparatus. In addition, new procedures for the measurement and reduction of the

resulting data were developed. A non-linear least-squares method for data analysis was developed which virtually eliminated all the drawbacks in the previously employed methods.

Once the initial objectives were achieved and the experimental technique was successfully tested, considerable effort was expended in the measurement of diffusion coefficients in binaries composed of the structurally similar compounds--toluene, aniline, and methylcyclohexane. The binary systems toluene-aniline and toluene-methylcyclohexane were studied over the complete concentration range at the temperatures 25°, 45°, and 60° C. The system aniline-methylcyclohexane was studied at 60° C over the entire composition range. Data for this system was restricted to this single temperature because phase separation for this highly non-ideal system occurred at temperatures near 45° C. Data on the viscosity and density of the systems were also obtained at the above stated conditions. Further, limited data on the index of refraction of the solutions were measured.

The choice of compounds which composed the binary systems of this study was based on a number of criteria. The following restrictions were imposed by the experimental technique: (1) the compounds must be transparent to the laser light, (2) a sufficient refractive index difference must exist between the compounds to permit detection by the

interferometer, and (3) the boiling points of the selected materials must be at least 80° C.

For investigative purposes, compounds were chosen which were similar in molecular structure. This limitation was made in an attempt to negate the unknown effects of complicated molecular structure on diffusion rates. This approach to choosing systems of interest had been employed in a previous work (93). However, the thermodynamic data, which is necessary for the evaluation of diffusion theories and predictive equations, was not available for the systems investigated in that work. Thus, another important requirement for the systems of this study was that thermodynamic activity data exist for each binary. Finally, the choice of these particular systems assured that non-ideal behavior would be observed.

A third major objective of this work was based upon a characterization of the variation of the friction coefficient with concentration. The experimental data of this and other works were then used to verify the derived relationships.

Finally, the presently existing correlations for the diffusion coefficient at infinite dilution were tested with the data obtained in this study. In addition, a study of the effects of molecular structure was made.

The objectives of this work can be briefly summarized as follows:

(1) the modification and refinement of the birefringent interferometer;

(2) development of reliable and accurate data analysis and reduction techniques;

(3) the actual measurement of the concentration dependence of the diffusion coefficient;

(4) the development of an accurate predictive equation for concentration dependence;

(5) an examination of the effects of molecular structure on infinite diffusion rates; and

(6) an evaluation of existing infinite dilution correlations.

All of these objectives have been attained in this investigation.

CHAPTER II

LITERATURE SURVEY

Background

Interest in the study of diffusion in liquid systems has existed for well over a century. The first experimental investigation of liquid diffusion was undertaken by Graham about 1850 (48). His results were qualitative in nature, and no attempt was made to give a theoretical description of the diffusion phenomenon. An analogy between the flow of heat and diffusion was first suggested in 1803 by Berthollet during his study of salt crystals dissolving in water (9). In 1855, a German physician, Adolph Fick, revived Berthollet's ideas (37). Having failed at discovering the basic law governing the diffusion process, it occured to Fick that a similar problem had already been extensively studied. He reasoned that principles similar to those described by Fourier (38), in his analysis of heat conduction in solids, were applicable to the study of mass transport by molecular diffusion. The most notable aspect of Fourier's work was that the flow of heat could

be described as a linear function of the temperature gradient. Consequently, Fick proposed that the driving force causing diffusional flow in binary mixtures was the gradient of concentration and that the diffusional mass flow was linearly related to this driving force.

Two equations are generally credited to Fick. The first equation, commonly called Fick's first law, may be written as

$$J_A = -D_A \text{ grad } C_A \tag{1}$$

where J_A is the flux of molecular species A, D_A is the diffusion coefficient of species A in species B, and grad C_A is the three dimensional concentration gradient of species A. The negative sign is used to indicate that the diffusional flow proceeds in the direction opposite to that of increasing concentration gradient. A similar equation may be written for the second component of the binary mixture.

Combination of Equation (1) with the requirement of continuity of mass over a differential unit volume results in an equation commonly known as Fick's second law

$$\frac{\partial C_A}{\partial t} = \text{div } (D_A \text{ grad } C_A) \tag{2}$$

where t represents time. Tyrell (113) has indicated that Fick believed Equation (2) to be the most important contribution of

his study. Equation (1) was simply regarded as a necessary step in the derivation of Equation (2).

As previously mentioned, Fick's first law applies to either component. For unidirectional diffusion, these relations may be expressed as

$$J_A = -D_A \frac{dC_A}{dx} \tag{3}$$

$$J_B = -D_B \frac{dC_B}{dx}. \tag{4}$$

In general, the two diffusion coefficients, D_A and D_B, are not identical. For practical considerations, it is desirable to describe the diffusion process in a binary system with only one independent diffusion coefficient. A way to obtain this result is to define the diffusional flows with respect to a plane across which no net volume transfer occurs. For this situation,

$$J_A^V \bar{V}_A + J_B^V \bar{V}_B = 0 \tag{5}$$

where $\bar{V}_A$ and $\bar{V}_B$ are the constant volumes of unit amounts which are used to define the concentrations of A and B, respectively; and the superscript, V, refers to the constant volume condition. Since the volume is constant, the partial molar volumes of A and B are equivalent to the volumes V_A and V_B.

Combining Equations (3) and (4) with Equation (5) results in

$$D_A^V \bar{V}_A \frac{dC_A}{dx} + D_B^V \bar{V}_B \frac{dC_B}{dx} = 0. \tag{6}$$

The differentiation of the definition

$$\bar{V}_A C_A + \bar{V}_B C_B = 1 \tag{7}$$

with the expression

$$C_A d\bar{V}_A + C_B d\bar{V}_B = 0 \tag{8}$$

gives the following relationship

$$\bar{V}_A dC_A + \bar{V}_B dC_B = 0. \tag{9}$$

Combining Equation (9) and Equation (6) yields the desired result, namely $D_A^V = D_B^V$. This common coefficient is the mutual diffusion coefficient which may be expressed as D_{AB}. This coefficient is the proportionality constant used by Fick and is the one commonly referred to in the literature as the "binary diffusion coefficient" or "binary diffusivity".

The definition of a mutual diffusion coefficient is not complete until a suitable frame of reference is specified.

Three of the most frequently used frames of reference are the volume-fixed, mass-fixed, and molar-fixed frames. The volume reference frame is of particular significance because it is involved in practically all experimental determinations of diffusion coefficients. The mass and molar frames of reference are encountered with the former being generally used with liquids and the latter with gases. Comprehensive discussions of these and other frames of reference and the mathematical relationships between them are presented in the literature (11, 13, 61, 64). It has been shown that for a binary system, the diffusion coefficient, D_{AB}^{V}, is identical in the three above mentioned reference frames (11, 111, 112), i.e., $D_{AB}^{V} = D_{AB}^{m} = D_{AB}^{n}$. It will, henceforth, be referred to simply as the diffusion coefficient, D_{AB}, with the superscript neglected.

Theoretical

Interest in the theoretical description of the diffusion process in liquids has existed since the time of Fick. Progress along theoretical lines has been slow because a general theory of diffusion in liquids requires an adequate description of the liquid state. To date, no such liquid state theory exists. As a result, existing theories have been only partially successful in providing an understanding of the factors affecting the magnitudes of diffusion coefficients. Some of the theories which have had limited success in describing the diffusion process are reviewed in the following paragraphs.

The first evidence indicating a hydrodynamic explanation of diffusion phenomena was found by Wiedeman (117) in 1858. He observed that the diffusion coefficients of dilute solutions varied inversely with the solvent viscosity. However, this work went largely unnoticed until an equation was presented by Walden (115) in 1906. He combined the findings of Wiedeman with the Exner Rule (32), which was an application of Graham's law to diffusion in liquids, to obtain

$$(D\eta M)^{\frac{1}{2}} = \text{constant.} \qquad (10)$$

Some experimental evidence supporting this relationship was later presented by Thovert (108,109).

During this same period, an extensive study of Brownian movement of colloidal particles was being conducted by Einstein (26, 27, 28, 29). He proposed that diffusional flow be regarded as a balance between a driving force and a resistance to flow. In his work, the driving force was taken to be the osmotic pressure gradient. Similar observations were made by Sutherland (103) in a completely independent study.

However, advances in modern thermodynamics have shown that the proper driving force is the gradient of chemical potential. This gradient may be expressed as

$$- (\Delta\mu_A)_{T,P} = - \frac{RT}{C_A} \alpha_{AB} \Delta X_A . \tag{11}$$

Defining ζ as the viscous resistance per molecule, the diffusional velocity may be written as

$$U_A = \frac{RT}{C_A N\zeta} \alpha_{AB} \frac{dC_A}{dx} \tag{12}$$

for unidirectional flow. The diffusion coefficient is related to Equation (12) by

$$J_A = C_A U_A = -D_{AB} \frac{dC_A}{dx} . \tag{13}$$

Combining Equation (12) with Equation (13) yields

$$D_{AB} = \frac{RT}{N\zeta} \alpha_{AB} . \tag{14}$$

In the original work of Sutherland and Einstein, only ideal solutions were considered, and consequently, the thermodynamic factor was unity. From classical hydrodynamic considerations, Stokes (101) showed that for the spherical particle of radius r_A moving in a continuous medium of viscosity η_B, the viscous resistance per molecule, may be expressed as

$$\zeta = 6\pi\eta_B r_A \left(\frac{1 + 2\eta_B/\beta r_A}{1 + 3\eta_B/\beta r_A}\right) \tag{15}$$

where β is the coefficient of sliding friction between the diffusing molecule and the surrounding medium.

Two limiting cases exist:

$$\beta = 0 \qquad \zeta = 4\pi\eta_B r_A \tag{16}$$

$$\beta \rightarrow \infty \qquad \zeta = 6\pi\eta_B r_A . \tag{17}$$

For a dilute solution of large spherical molecules diffusing through a solvent of small molecules of low molecular weight, Sutherland suggested that little hydrodynamic slip would occur and that Equation (17) would be applicable to such a system. Assuming the system to be ideal, combination of Equation (14) with Equation (17) gives the relationship known as the Stokes-Einstein equation:

$$D_{AB} = \frac{RT}{(6\pi\eta_B N r_A)} . \tag{18}$$

This equation has been used as the basis for the development of empirical equations for the prediction of diffusion coefficients in dilute solutions. The equation is also used to extrapolate values of infinite dilution diffusion coefficients over small temperature ranges. For this situation, the radius of the molecule of the solute is assumed to be temperature invariant over the range under consideration. The diffusion coefficient at a temperature, T_2, may be estimated from the known value at temperature, T_1, by

$$D_{AB}(T_2) = D_{AB}(T_1)\left(\frac{T_2\eta(T_1)}{T_1\eta(T_2)}\right). \tag{19}$$

Though often used, the above expression has been shown to be a poor estimate for many systems (57).

As the molecular size of the solute molecules approaches the size of the solvent molecules (e.g., as in self-diffusion), Sutherland reasoned that there would be free spaces between solvent molecules through which the solute molecule could move freely. For this condition Equation (16) was applied, resulting in

$$D_{AB} = \frac{RT}{4\pi\eta_B N r_A}. \tag{20}$$

It should be noted that in this development the solute molecule is no longer considered to be in motion in a continuous medium.

At best the hydrodynamic approach has only limited success in the prediction of diffusion coefficients. Good results are obtained only for infinite dilution conditions and for large solute molecules in low molecular weight solvents. The apparent failure of this approach lies in the inability to accurately predict the viscous resistance, or friction coefficient, of a molecule in solution.

In the absence of a classical kinetic theory of liquids, Arnold (4) in 1930 modified the kinetic theory of gases and applied it to liquid mixtures. His derivation closely paralleled the approach used previously by Stefan (100) in the development of an expression for gaseous diffusion.

By making the following assumptions with regard to the collision rate between molecules, viz. (1) only binary collisions are considered, (2) molecular volume does not affect the rate, and (3) intermolecular attractions are negligible, Arnold developed the following relationship

$$D_{AB} = \frac{BV_B \sqrt{(M_A + M_B)/M_A M_B}}{S^2} \qquad (21)$$

where M_A and M_B are the molecular weights of the solute and solvent, respectively, S is the sum of molecular diameters, V_B is the solvent molar volume, and B is a constant. However, since the three assumptions were invalid for the liquid state, Arnold developed a correction factor from an analysis of

diffusion data for non-electrolytes. The resulting predictive expression is

$$D_{AB} = \frac{BV_B \sqrt{(M_A + M_B)/M_A M_B}}{Zs^2} \qquad (22)$$

where $Z = A_A A_B V_B \eta^{\frac{1}{2}}$. The terms A_A and A_B are "abnormality factors" which correct for the association of the solute and solvent, respectively. Equation (22) has been compared with experimental data (17, 43, 110), with a reported average deviation of 10 per cent for dilute solutions. However, this result is not unexpected in that the equation contains three adjustable parameters.

By applying the theory of rate processes in conjunction with a cell model concept of liquid structure, Eyring and coworkers (33) developed a far more general kinetic theory of liquids. This theory provided the first liquid structure model that permitted the calculation of physical properties in liquids. In a series of papers, Eyring and his co-workers developed equations for the coefficients of diffusion and viscosity (31, 34, 52, 60, 99). Summaries of these works are presented by Glasstone, Laidler, and Eyring (45) and Kincaid, Eyring and Stearn (59).

The Eyring rate theory is based on a cell model for a liquid which contains vacancies or holes. Using this concept the diffusion coefficient is expressed as

$$D_{AB} = \frac{K\lambda^2}{\delta} \qquad (23)$$

where λ represents the distance between successive equilibrium positions of the diffusing molecule, δ is a parameter which describes the geometrical configuration of the diffusing molecule and its immediate neighbors, and K is a rate constant for a unimolecular rate process which expresses a deviation from an equilibrium position. This rate constant is expressed as

$$K = \frac{kT}{h} \frac{F'_{AB}}{F_{AB}} \exp\left(\frac{-E_{D,AB}}{RT}\right) \tag{24}$$

where F_{AB} and F'_{AB} are the partition functions for the molecule in the equilibrium and in the activiated states, respectively. $E_{D,AB}$ is the activation energy for the diffusion process.

The application of this theory to viscous flow yields the following expression for liquid viscosity:

$$\eta_B = \frac{h \lambda_{1B}}{\lambda_{2B} \lambda_{3B} \lambda_{2B}} \frac{F_{BB}}{F'_{BB}} \exp\left(\frac{E_{\eta,B}}{RT}\right) \tag{25}$$

where λ_{1B}, λ_{2B}, λ_{3B} represent the distance between molecules in the three coordinate directions and $E_{\eta,B}$ is the energy of activation for viscosity.

Combining Equation (23) with Equations (24) and (25) results in the following expression:

$$D_{AB} = \frac{kT}{\delta \eta_B} \frac{\lambda_{1B}}{\lambda_{2B} \lambda_{3B}} \frac{F_{BB}}{F'_{BB}} \frac{F'_{AB}}{F_{AB}} \exp\left(\frac{E_{\eta,B}}{RT}\right). \tag{26}$$

Equation (26) is then simplified by making two assumptions. First,

$$\lambda_{1B} = \lambda_{2B} = \lambda_{3B} \approx \left(\frac{V_B}{N}\right)^{1/3} \tag{27}$$

where V_B is the molar volume. Second, the rotational and vibrational contributions to the partition functions are assumed equal in both the normal and activated states. Thus, consideration of only the translational contribution of the partition functions results in

$$\frac{F_{BB}\, F'_{AB}}{F'_{BB}\, F_{AB}} = \left(\frac{m_B}{m_A}\right)^{1/2} \left(\frac{V_{f,BB}}{V_{f,AB}}\right)^{1/3} \tag{28}$$

where m is the mass of the molecule and $V_{f,AB}$ is the free volume of molecule A surrounded by a cell composed of molecule B. Olander (73) has suggested that the product of the ratios of the translational partition functions of Equation (28) varies very little. A change in one ratio is nullified to some degree by an opposite change in the other ratio. The product of the ratios is then approximated by unity and Equation (26) for the diffusion coefficient becomes

$$D_{AB} = \frac{kT}{\delta \eta_B} \left(\frac{N}{V_B}\right)^{1/2} \exp\left(\frac{E_{\eta,B} - E_{D,AB}}{RT}\right) \tag{29}$$

In using the above equation, Eyring and his co-workers (45, 84) assumed the equality of activation energies for diffusion and viscosity. This assumption is only approximately true

for mutual diffusion and is valid only for the case of self-diffusion. Olander (73) proposed that differences between the observed values of diffusivity and those predicted by Eyring's equation could be attributed to the invalid assumption of equal activation energies for diffusion and viscosity. He suggested a method for estimating the difference between the two energies which is given by

$$E_{\eta,B} - E_{D,AB} = \frac{E_{\eta,B}}{2} - f(E_{\eta,A}\, E_{\eta,B})^{1/2} . \qquad (30)$$

here f represents the fraction of the activation energy associated with the transition of a molecule from one equilibrium position to another. The value of f for a non-associated liquid is taken to be one-half. Using the above correction a reduction of error in the prediction of diffusion coefficients was achieved.

Modifying the absolute rate approach, Gainer and Metzner (42) presented expressions for the energy barriers encountered by a diffusing molecule. This work was based on a cell model of a liquid which took into account both the inter-molecular force field and simple geometric effects. Diffusivities at infinite dilution calculated from their work were compared with observed values for several systems. The systems analyzed were chosen for their molecular structure, thermodynamic non-ideality, and high viscosity level. For highly viscous systems, estimates

of diffusion coefficients were reasonable with a resultant mean deviation of eighteen per cent. For the same systems, use of prior-art empirical correlations resulted in estimates that were too low by an order of magnitude. Nevertheless, for systems of normal viscosity, expressions of Gainer and Metzner were as accurate as the empirical relations.

To date, no other theory has been able to yield reasonable results for so many physical and transport properties as Eyring's absolute rate theory. However, several criticisms may be made. The theory is inherently model dependent. The use of a model does not properly account for all of the errors arising from the necessary assumptions. Another criticism is that several parameters are utilized which can be adjusted until agreement with experiment is obtained. Further, the results are inferior to a number of empirical correlations which are presented in the literature.

Hartley and Crank (50) developed an equation based upon the concept of intrinsic diffusivity. The intrinsic diffusivity described the rate of transfer of component A across a fixed reference frame so that there was no net mass transfer through it. This definition was intended to circumvent the problem encountered with other frames of reference in which the diffusional flows of components A and B were not generally equal. Hartley and Crank, for a binary system

with constant partial molar volumes, derived the following relationship between the mutual diffusion coefficient and the intrinsic diffusivities

$$D_{AB} = \bar{V}_A C_A (\bar{D}_A - \bar{D}_B) + \bar{D}_A \tag{31}$$

where $\bar{D}_A$ and $\bar{D}_B$ are the intrinsic diffusion coefficients. Extending the intrinsic diffusivity concept to mutual diffusion in a binary non-ideal system with a volume referenced diffusion coefficient, they derived the following equation:

$$D_{AB} = \frac{RT}{N}\left(\frac{X_B}{\eta\sigma_A} + \frac{X_A}{\eta\sigma_B}\right) \alpha_{AB} . \tag{32}$$

Here σ_i denotes the resistance coefficient which is a function of molecular size, shape, and solvent viscosity.

Comparing the form of Equation (32) with Equation (14) shows that Hartley and Crank used the product, $\eta\sigma_i$, to represent the resistance coefficient of a molecule, ζ. Since little is known about the variation of these coefficients with temperature and composition, they are usually evaluated from the diffusivity data at the two composition extremes. The resistance coefficients are then assumed to be composition independent.

Much confusion has arisen from the concept of intrinsic diffusivity as developed by Hartley and Crank. This misunderstanding is the result of an unclear definition of their

reference frame. Bearman (7) showed that if it was interpreted as a reference frame through which there occurred no net mass flow, then the intrinsic diffusivities were related to the volume fixed mutual diffusion coefficient, D, by

$$D_A = \frac{D}{\bar{V}_B} ; \quad D_B = \frac{D}{\bar{V}_A} \tag{33}$$

and as such, could not be considered intrinsic. Using a statistical mechanical approach, Bearman concluded that for regular solutions

$$D_A = D_B = D. \tag{34}$$

Later, Mills (69) analyzed the problem and showed that the latter relationships are correct. He concluded that the intrinsic diffusivity was, in fact, identical to the mutual diffusivity in a volume fixed reference frame. This conclusion did not invalidate the Hartley-Crank equation but did make Equation (31) trivial.

A significant step in the development of the statistical mechanical theory of transport properties in mixtures was made by Bearman and Kirkwood (8). These investigators derived the macroscopic equations of transport from equations of molecular dynamics. They also showed that the postulation of linear expressions for the distribution functions in terms of the velocities of the components and the temperature gradient lead to the linear relationships of irreversible thermodynamics.

The next logical step in the development of this approach is the determination of perturbations in the distribution functions resulting from non-equilibrium conditions. Then, values of transport coefficients could be calculated from molecular parameters. Thus far, it has not been possible to calculate magnitudes of the friction coefficients which are necessary to evaluate the diffusion coefficients. However, using simplifying assumptions, Bearman (7) has developed equations for the composition dependence of the ratios of the friction and diffusion coefficients.

The starting point in the approach used by Bearman (7) is the definition of a mean frictional force, $\bar{F}_{\alpha}^{(1,1)*}$, acting on a molecule of species, α, in a γ-component, isothermal, isobaric system. For the case of one dimensional diffusion, the defining equation has the form

$$F_{\alpha}^{(1,1)*} = -\sum_{\beta=1}^{\gamma} C_{\beta}\xi_{\alpha\beta}(U_{\alpha} - U_{\beta}) \qquad (35)$$

where C is the concentration of species β in molecules per unit volume, U_{α} and U_{β} are the mean velocities of species α and β, respectively, with respect to a space fixed coordinate system and $\xi_{\alpha\beta}$ is the friction coefficient.

The assumptions used by Bearman in obtaining Equation (35) are that non-equilibrium perturbations could be related linearly to the mean velocities of the various species and that the

intermolecular forces between molecules were a function only of the distance between molecules. The friction coefficients defined by Equation (35) are averaged over all the species present and are generally dependent upon composition. Also, the friction coefficients obey the reciprocal relation, $\xi_{AB} = \xi_{BA}$.

For isothermal, isobaric diffusion processes, the partial equations of motion of Bearman and Kirkwood (8) reduce to the form

$$F_{\alpha}^{(1,1)*} = \text{grad } \mu_{\alpha}. \tag{36}$$

For one dimensional diffusion, Equation (36) gives

$$\frac{d\mu_{\alpha}}{dx} = -\sum_{\beta=1}^{\gamma} C_{\beta} \xi_{\alpha\beta}(U_{\alpha} - U_{\beta}). \tag{37}$$

Applying Equation (37) to diffusion in a binary system with a volume-fixed reference frame, Bearman obtained the following expressions:

$$J_A = -D_{AB} \frac{dC_A}{dx}; \quad J_B = -D_{BA} \frac{dC_B}{dx} \tag{38}$$

$$D_{AB} = \frac{\bar{V}_A kT}{\xi_{AB}} \left(\frac{d\ln a_B}{d\ln C_B}\right)_{T,P}$$

$$= \frac{\bar{V}_B kT}{\xi_{BA}} \left(\frac{d\ln a_A}{d\ln C_A}\right)_{T,P}. \tag{39}$$

It should be noted that the first pair of expressions are identical to Fick's first law and that the mutual diffusion coefficient, D_{AB}, is inversely related to the friction coefficient.

It is not possible to determine absolute values for individual friction coefficients. However, Bearman derived relationships between friction coefficient ratios, molar volumes, and self-diffusivities (7). In this derivation it was necessary to make two additional assumptions. First, the pair friction coefficient is equal to the ordinary friction coefficient. It has been shown that, at large intermolecular distances, the pair friction coefficient asymptotically approaches the value of the ordinary friction coefficient. Bearman noted that this assumption was present in most practical theories of transport phenomena although its validity has not yet been ascertained (6). Second, it was required that the friction coefficient ratios be independent of composition. Implicit in this requirement were the assumptions of composition independent radial distribution functions and additive molecular volumes. Bearman called solutions satisfying the latter assumptions "regular" although the requirements for this definition are different from those defined in solution thermodynamics (51). However, the radial distribution function is composition independent only for identical chemical species. On the other hand, if the two

molecular species have approximately the same intermolecular potential and are about the same size and shape, this assumption is not unreasonable. With these restrictions Bearman obtained the following equations:

$$\frac{D_A^*}{D_B^*} = \frac{V_B}{V_A} \tag{40}$$

$$\frac{\xi_{AA}}{\xi_{AB}} = \frac{V_A}{V_B} ; \quad \frac{\xi_{BB}}{\xi_{AA}} = \frac{V_B}{V_A} ; \quad \frac{\xi_{BB}}{\xi_{AA}} = \left(\frac{D_A^*}{D_B^*}\right)^2 \tag{41}$$

$$D_{AB} = (X_A D_A^* + X_B D_B^*) \left(\frac{d\ln a_A}{d\ln x_A}\right)_{T,P} \tag{42}$$

where D_A^* and D_B^* are the self-diffusion coefficients of the pure components, and ξ_{AA} and ξ_{BB} are the friction coefficients for self-diffusion. It should be noted that Equation (42) is identical to an expression previously proposed by Darken (21).

Bearman (6) also examined the equations of Eyring and his collaborators, of Hartley and Crank (50), and of Gordon (46) using statistical mechanical considerations. He demonstrated that their results were of equal validity and were obtainable from the statistical mechanical approach with the usual assumptions of "regular" solutions. Thus, he concluded that these assumptions were implicit in their approaches.

Recently Loflin and McLaughlin (65) have shown that Equation (42) implies the use of the geometric-mean relationship,

$\xi_{AB} = (\xi_{AA}\xi_{BB})^{1/2}$, between the friction coefficients. In order to avoid the use of this approximation, they employed the Rice-Allnatt (89) extension of the approximate Rice-Kirkwood theory (90) to evaluate ratios of friction coefficients. From their results, they concluded the following: (1) for mixtures which approximate regular solutions, the geometric-mean relationship holds and Equation (42) yields reasonable results; (2) for less ideal solutions the thermodynamic factor overcorrects the effect of the $(X_A D_B + X_B D_A)$ term, and (3) the Rice-Allnatt approach yields quantitative agreement with experimental values for binaries which are close to ideality. This latter result is not unexpected since the Rice-Allnatt approach is similar to the Bearman relationship for nearly ideal solutions.

Another formal approach to the study of diffusional flow is non-equilibrium or irreversible thermodynamics. Treatment of the diffusion process along these lines is exemplified by the works of Prigogine (79), de Groot (22), Laity (62), and Dunlop (25). Although relationships between the diffusivity and the phenomenological coefficients are obtained, no information about the prediction of the phenomenological coefficients is given.

Bird (12) has suggested the application of the corresponding states principle to the diffusion process. This approach

was used by Naghizadeh and Rice (70) and Gavan et al. (44) for simple binary systems. Thomaes and van Itterbeek (105) also utilized the approach to obtain a relation which predicts the value of the diffusion coefficient of a substance in a solvent when the coefficient of another substance in the same solvent is known. These works showed that reasonable results were possible only for spherical non-interacting molecules.

Predictive Techniques

The current absence of a general theoretical description of the diffusion process necessitates the development and use of empirical predictive equations. The following paragraphs will be restricted to the presentation of empirical relations which are currently utilized in the prediction of diffusion coefficients in binary, nonelectrolytic solutions. Equations for the estimation of infinite dilution coefficients will be treated first; then, predictive expressions dealing with the concentration dependence of diffusion coefficients will be reviewed.

Othmer and Thakar (75) noted that the diffusion coefficient and the solvent viscosity were similar functions of the vapor pressure of a reference substance and proposed plots of log D versus log η. The slope of the resulting linear plots is the ratio of the activation energies for diffusion and for viscosity. An empirical relationship based on this fact was obtained:

$$D_{AB}^{o} = \frac{1.4 \times 10^{-4}}{\eta_W (1.1\, L_B/L_W) \eta_B V_A^{0.6}} \qquad (43)$$

Here D_{AB}^{o} is the diffusion coefficient of a dilute solution of A in B, η_W and η_B are the viscosities of water and the solvent at 20° C, respectively, and L_B and L_W are the latent heats of vaporization of solvent and water, respectively. For seventy-six systems with non-aqueous solvents between 7° and 25° C,

Equation (43) yielded estimates that were within thirteen per cent of the observed values; with water as the solvent, the average deviation was 5 per cent.

One of the most frequently used predictive equations for infinite dilution diffusion coefficients was originally proposed by Wilke (118). Basing his development on the Stokes-Einstein relation, Equation (18), Wilke developed a correlation based on data for a limited number of systems. As more diffusion data became available, the original equation was modified by Wilke and Chang (119) to

$$D^{o}_{AB} = \frac{7.4 \times 10^{-8} (\psi M_B)^{1/2} T}{\eta_B V_A^{0.6}} \qquad (44)$$

where ψ is the "association" parameter of the solvent. Based on two hundred and fifty-one systems, Wilke and Chang reported an average error of 10 per cent between observed and predicted values. However, Olander (72) found that, for water in organic solvents, the values predicted by Equation (44) were about 2.3 times greater than the experimental data. Consequently, it has been recommended that this equation be divided by 2.3 for this case (87).

Scheibel (95) proposed a modification to the Wilke-Chang equation which eliminated the use of the "association" parameter. His expression takes the form:

$$D^{o}_{AB} = \frac{8.2 \times 10^{-8}(1 + 3V_B/V_A)^{2/3}T}{\eta_B V_A^{1/3}} \quad (45)$$

Average errors of 10 per cent resulted. With a similar goal in mind, Reddy and Doraiswamy (83) have replaced the association parameter of the Wilke-Chang equation with the square root of the solvent molar volume. These authors propose two equations--the use of which is dependent upon the ratio of the molar volumes of the solvent and solute:

CASE 1: For $\frac{V_B}{V_A} \leq 1.5$

$$D^{o}_{AB} = \frac{10 \times 10^{-8} M^{1/2}T}{\eta_B V_A^{1/3} V_B^{1/3}} \quad (46)$$

CASE 2: For $\frac{V_B}{V_A} > 1.5$

$$D^{o}_{AB} = \frac{8.5 \times 10^{-8} M^{1/2}T}{\eta_B V_A^{1/3} V_B^{1/3}} . \quad (47)$$

The above equations were tested for ninety-six systems which yielded average errors of 13.5 per cent for Case 1 and 18 per cent for Case 2. However, it should be realized that Case 2 included systems involving water as a solute. For these systems, the Wilke-Chang equation results in errors of greater than 100 per cent; Equation (47) reduced this value to an average deviation of 25 per cent.

Recently Lusis and Ratcliff (67) have presented a correlation based upon a combination of concepts from both the hydrodynamic and absolute rate theories. The developed expression is:

$$D^{o}_{AB} = \frac{8.52 \times 10^{-10}}{\eta_B V_B^{1/3}} \left[1.40 \left(\frac{V_B}{V_A}\right)^{1/3} + \left(\frac{V_B}{V_A}\right)\right] \qquad (48)$$

This equation is recommended for estimation of diffusion coefficients in organic solvents.

A comparison of the various equations presented here, using data cited by Reid and Sherwood (87), yielded the following average errors: Wilke-Chang, 20 per cent; Othmer-Thakar, 33 per cent; Scheibel, 23 per cent; and Lusis-Ratcliff, 16 per cent.

The discussion to this point has been concerned with the prediction of infinite dilution coefficients. This is the case in which one liquid is present in a minute amount. However, it is often desirable to know the diffusion coefficients at other composition levels. The remainder of this section will be devoted to the presentation of currently available expressions for predicting the concentration dependence of diffusion coefficients.

By combining the results of statistical mechanics with the "ideal" associated solution model of Prigogine (80), Rathbun (82) arrived at the following equation for the

concentration dependence of the diffusion coefficient:

$$D_{AB} = \left(X_A D^{o}_{BA} + X_B D^{o}_{AB}\right) \frac{d\ln a_A}{d\ln X_A} \qquad (49)$$

Application of Equation (49) to experimental data resulted in predicted values that were significantly lower than observed values, an effect that has been reported by other investigators (3, 18, 58). Rathbun suggested that the thermodynamic factor $d\ln a_A/d\ln X_A$ "over-corrected", but this factor did predict the general shape of the diffusivity-mole fraction curve. To alleviate this problem, he proposed that an empirical exponent be applied to the thermodynamic factor. The equation then may be written as

$$D_{AB} = \left(X_A D^{o}_{BA} + X_B D^{o}_{AB}\right)\left(\frac{d\ln a_A}{d\ln X_A}\right)^{S} \qquad (50)$$

For systems exhibiting a positive deviation from Raoult's Law, the recommended value of S was 0.6; for negative deviations from Raoult's Law, the recommended value was 0.3. Equation (50) has been largely applied to systems consisting of a non-polar and an associated component.

An equation similar to Equation (50) had been previously proposed by Bearman (6), who used statistical mechanical considerations, and by Darken (21) who arrived at the expression empirically. These investigators used self-diffusivities to

evaluate the mutual diffusion coefficient while Rathbun's equation calls for experimental values of the infinite dilution diffusion coefficient.

Vignes (114) proposed the following empirical expression for the concentration dependence of mutual diffusion coefficients:

$$D_{AB} = (D^{o}_{AB})^{X_B} (D^{o}_{BA})^{X_A} \frac{d\ln a_A}{d\ln x_A} \qquad (51)$$

This equation was subsequently derived by Cullinan (20) on a semitheoretical basis. Vignes stated that this relationship is generally valid for both ideal and non-ideal systems. However, it was not recommended for associated systems. In order to obtain information on the applicability of Equation (51), Dullien (24) recently studied it from a statistical viewpoint. The results of his work suggested that presently available experimental data do not verify the claim of the general validity of the Vignes expression for non-ideal, non-associated systems. However, the results did indicate excellent correlation for ideal systems.

Leffler and Cullinan (63) have recently modified the Vignes expression in an effort to extend its over-all predictive capability. Using the theory of absolute reaction rates with the assumption that the difference between the activation energy

for viscosity and for diffusion was constant, these investigators were able to include a viscosity effect and arrived at the following equation:

$$D_{AB} = \frac{(D^{\circ}_{AB}\,\eta_B)^{X_B}\,(D^{\circ}_{BA}\,\eta_A)^{X_A}}{\eta_m}\;\frac{d\ln a_A}{d\ln X_A} \qquad (52)$$

where η_A, η_B, and η_m are the viscosities of pure component A, pure component B, and of the mixture, respectively. Except for the case of n-alkanes, the modified equation provided a better description of the diffusional behavior of liquids than the original Vignes expression.

By including an excess free energy term in the mixing rule used by Cullinan (20) to derive Equation (51), Thoroughgood and Beckman (107) proposed an expression which could be applied to all binary liquid systems. This equation is

$$D_{AB} = \frac{(D^{\circ}_{AB})^{X_B}\,(D^{\circ}_{BA})^{X_A}}{\gamma_A^{X_A}\;\gamma_B^{X_B}\;\omega}\left(\frac{d\ln a_A}{d\ln X_A}\right)^{1/\varphi} \qquad (53)$$

where γ_A, γ_B are the activity coefficient of species A and B, respectively. The parameters ω and φ are defined as follows:

$$\omega = \exp\left([X_A(B_{AA} - V_A)(P - P^{\circ}_A) + X_B(B_{BB} - V_B)(P - P^{\circ}_A) + P\,f_{AB}(Y_A^2 - Y_B^2)]/RT\right) \qquad (54)$$

$$\varphi = \frac{1}{1 - \Theta} \qquad (55)$$

where B, P^{o}, f_{AB}, Y are the second virial coefficient, the pure component vapor pressure, gas parameter and the vapor mole fraction, respectively, and ϵ is the per cent of association.

The practical use of Equation (53) is hampered by the amount of experimental information necessary to evaluate the necessary parameters. In addition to the reliable diffusion coefficient, thermodynamic, and vapor-liquid equilibrium data necessary, determination of the value of ω requires experimental knowledge of the solvolysis number for each binary and the association parameter for each component. An analysis of results presented by Thoroughgood (106) for thirty-one binary systems indicates that the equation predicts diffusion coefficient behavior reasonably well whenever the necessary data are available.

In the previous equations, the calculation of the concentration dependence of the diffusion coefficient required the use of thermodynamic activity data. In an effort to eliminate the use of activity data, a method has been presented by Gainer (41), based on a modified rate theory. This method utilizes only the physical properties of the liquids such as viscosity and molar volume. The necessary equations are,

$$D_{AB} = \frac{kT}{\delta_A \eta_B} \left(\frac{N}{V_B}\right)^{1/3} \exp\left(\frac{E_{\eta,B} - E_{D,AB}}{RT}\right) \qquad (56)$$

where

$$E_{\eta,B} - E_{D,AB} = \frac{E_{\eta,B}}{2} - \left(\frac{\delta_A}{\delta_B}\right)\sqrt{\left(\frac{r_{AA}}{r_{BB}}\right)\left(\frac{E_{\eta,AH}}{2}\right)\left(\frac{r_{BB}}{r_{AB}}\right)\left(\frac{E_{\eta,BH}}{2}\right)} \qquad (57)$$

and

$$E_{\eta,x} = RT \ln\left(\frac{\eta_x V_x^{2/3} \Delta E_{VAP,x}}{(\text{const})\ M_x^{1/2} T^{3/2}}\right). \qquad (58)$$

Here δ_x is a geometric parameter obtained from self diffusion data; r_{xy} is the distance between molecules x and y; and $E_{\eta,xH}$ and $E_{\eta,x}$ are the viscosity activation energies due to hydrogen bonding and dispersion forces, respectively. Preliminary results for three different types of systems indicate that the concentration dependence of the diffusivity may be predicted using the above relationships. However, it remains that this approach requires further testing.

CHAPTER III

EXPERIMENTAL APPARATUS

There exist numerous methods which may be used to investigate the rates of molecular diffusion. Methods which employ optical techniques are particularly advantageous because they require no calibration and are capable of accurate measurements. Presently, one of the most accurate of these methods involves the study of infinite diffusion with a birefringent interferometric system. Analysis of the birefringent interferometer has shown it to possess a high degree of precision unattainable by previous methods in which the optical power of resolution limits accuracy (15).

All experimental diffusion methods suffer from the fact that a finite concentration difference must be used to determine the diffusion coefficient, i.e., an integral diffusion coefficient is determined over a finite concentration range. It is desirable, however, to obtain a differential diffusion coefficient at a point concentration. A particular advantage of the birefringent method is that its high degree of resolving

power permits the detection of the diffusion process from small differences in refractive index. These differences are directly the result of extremely small composition differences between the two diffusing solutions. For this case, the refractive index is linearly related to the concentration. The diffusion coefficient thus determined may be taken as the differential diffusion coefficient at the mean of the initial concentration difference. Further, as the two diffusing solutions have nearly identical composition, any volume changes which may occur upon diffusion can be considered to be vanishingly small. This condition assures that the experimental diffusion coefficient corresponds to the Fickian diffusion coefficient.

A double Savart plate birefringent interferometer was used in the present work to determine the binary diffusion coefficients. The interferometer has been described in detail by Merliss (68) who based his design on the work of Bryngdahl and Ljunggren (16) and Ingelstam (55, 56).

Using the apparatus, Merliss obtained satisfactory results. However, from an analysis of his initial work, it was apparent that the potential of the experimental method had not been fully realized. The interference patterns which were recorded possessed a lack of sharpness which led to inaccuracies in fringe analysis. A redesign of the interferometer and a re-evaluation

of the experimental technique was necessary. Consequently, the first objective of this work was to improve the performance of the experimental apparatus by modification of both the experimental equipment and the experimental technique. The following paragraphs will be devoted to an abbreviated description of the experimental equipment to include the additions and modifications made in this work. These changes significantly improved the experimental results obtainable.

Diffusion Apparatus

The experimental equipment used to determine the binary diffusion coefficients consisted of a birefringent interferometer, a constant temperature air bath, a flowing junction diffusion cell, a 35 mm still camera, and a time measurement system.

The Interferometer. The birefringent interferometer consisted of an optical bench, a lens system, and a laser light source. A schematic diagram of the interferometer system is shown in Figure 1. With reference to this figure, the operation of the interferometer may be explained briefly as follows: a spatially and temporally coherent, polarized light beam from a helium-neon gas laser (Electro Optics Associates, Model 201) is expanded and collimated by meshing the focal points of lenses L_1 and L_2. As each collimated wave front

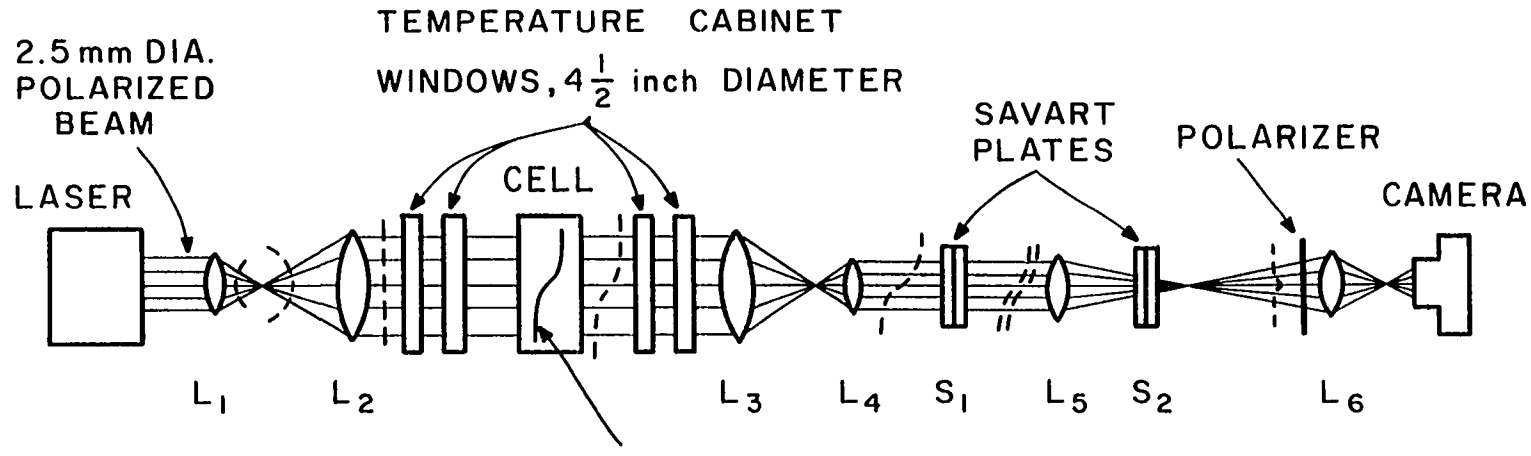

L_1 — 18.3 mm DIA., 39 mm f/1

L_2, L_3 — 4 1/8 inch DIA., 60 inch f/1

L_4 — 35 mm DIA., 200 mm f/1

L_5 — 35 mm DIA., 63 mm f/1

L_6 — 36 mm DIA., 100 mm f/1

NOTE:

DASHED LINES REPRESENT SHAPE OF LIGHT FRONT AT POINT INDICATED

Figure 1. Interferometer Optical Arrangement

passes through the diffusion cell, it is distorted according to the form of the refractive index profile existing in the diffusing solutions at that instant in time. Lenses L_3 and L_4 are used to demagnify the collimated beam after it exits the cell. This demagnification is necessary in order to use small Savart plates. As each wave front passes through the Savart plate, S_1, it is divided into two identical component wave fronts that are minutely displaced relative to each other. The placement of the Savart plate, S_2, in the convergent light from lens L_5 introduces a small angle between the displaced wave fronts. If the difference between wave fronts is an integral or half-integral number of wave lengths, these fronts interfere constructively or destructively. Interference fringes become visible upon placement of a polarizer in the light path. A final lens, L_6, is used to properly focus the interference pattern on the photographic film. The resulting interferogram then gives a direct representation of the concentration gradient profile existing in the diffusing solutions.

The optical bench, used to provide support for the optical components of the interferometer, was composed of two, eight-inch steel channel beams mounted on three rubber-cushioned concrete pillars. Vibrations and outside disturbances were

therefore minimized. The extreme length of the bench (20 feet) permitted the use of long focal length lenses, which improved the quality of the collimated light.

Each optical component of the interferometer, namely the six lenses and the two Savart plates, was mounted in an individual unit. The lens mounts were designed to give maximum flexibility for alignment purposes; each had at least four, and in some cases five, degrees of freedom. Lens movement control for each degree of freedom was to within 0.002 inches. Each lens mount and the laser was fastened by screws to separate magnesium platforms. These platforms were securely bolted to the channel beams of the optical bench by four one-half inch diameter threaded rods.

One of the modifications of this work was the compact arrangement of the lens mounts between L_4 and the camera. The reduction of distance between these two points minimized the effects of any errors in collimation caused by imperfect meshing of the focal points of lenses L_3 and L_4.

High quality achromatic lenses were used throughout the optical system. The lens arrangement as used in this work is given in Figure 1. It should be mentioned that the use of a short focal length lens (63 mm) at L_4 was one of the key steps in improving the contrast and clarity of the interference fringes. The Savart plates consisted of two identical

quartz crystals cemented together with the optical axis of the first rotated 90° relative to that of the second. They were flat to within two hundred angstroms and parallel to within fifteen seconds. Lenses and Savart plates were supplied by the Karl Lambrecht D/B/A Crystal Optics, Chicago, Illinois. An aluminum adapter was used to permanently attach a polarizer (Tiffen Optical Co., SR-55M) to lens mount L_6. This modification permitted precision adjustment of the polarizer for the complete range of polarization angles.

The Diffusion Cell. A flowing junction diffusion cell built by Merliss (68) and based on the design of Svensen (104) and Skinner (98) was used in this study. The body of the cell was machined of 316 stainless steel and was jacketed with one-inch thick copper plate. The cell windows were fabricated of Schott BK-7 optical glass with surfaces which were flat to within one thousand angstroms and parallel to within fifteen seconds. The cell windows, which were sealed with gaskets of 0.003 inch Plialine Teflon sheet, were supported by adjustable aluminum brackets to facilitate the alignment of the windows. A schematic drawing giving the pertinent dimensions of the cell is presented in Figure 2.

The fluid withdrawal slits along the horizontal centerlines of the cell walls were formed by two removable stainless steel plates. Originally the plates were attached to the cell

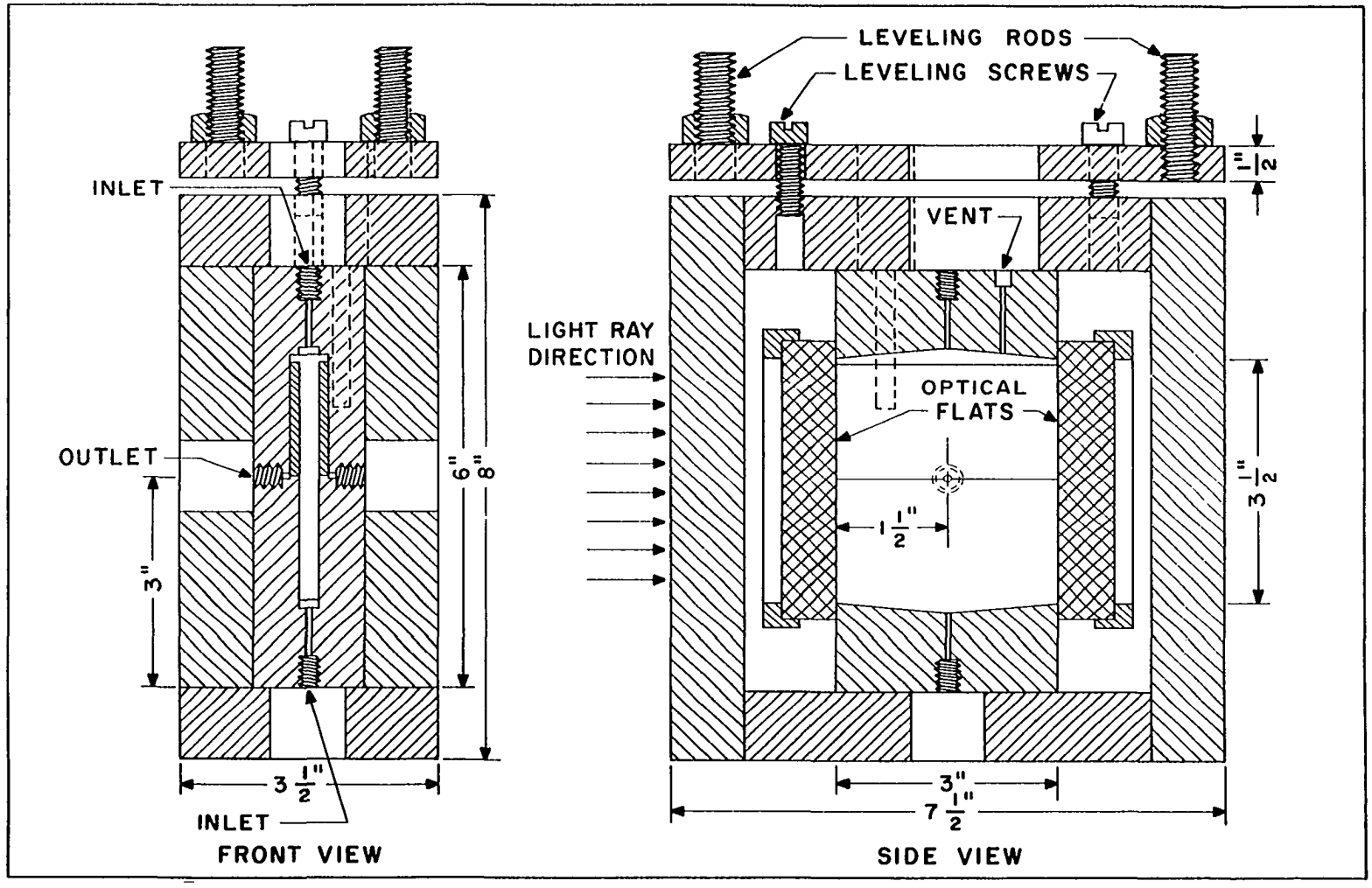

Figure 2. Flowing Junction Test Cell

walls by means of a rubber-based cement. This procedure limited the versatility of the cell in two ways: (1) solutions which could be contaminated by the cement could not be used, and (2) the slit width was fixed once the plates were cemented in place. To avoid these drawbacks, each plate was bolted to the cell walls by four small machine screws (0-80, 1/2 inch). Countersunk holes drilled through the cell walls for the screws were slightly oversized so that the slit width was adjustable between 0.000 and 0.006 inches. Teflon sheet was used to seal the plates to the cell wall and Teflon washers were used on each screw. To permit easy access to the plate screws, the copper jacketing plates on each side of the cell were cut at the horizontal centerline.

The body of the cell contained four fluid openings; an inlet at the top of the cell, an inlet at the bottom of the cell, and two outlets located directly opposite to each other at the center of each withdrawal slit. The fluid openings were 1/32 inch in diameter and were countersunk and tapped for 1/8 inch stainless steel connections. Each fluid inlet was connected to a stainless steel fluid reservoir by 1/8 inch stainless steel tubing. The two fluid outlets were connected by a manifold which discharged to a drain. The cell was vented by a 1/4 inch stainless steel tube which was silver-soldered into the cell. It was located adjacent to the top

cell inlet. In addition, a 1/4 inch diameter hole, two inches in depth, was drilled into the side wall to serve as a platinum thermometer well.

The two fluid reservoirs were constructed of three-inch diameter 316 stainless steel pipe and 316 stainless steel plate. Each vessel had a volume of five hundred cubic centimeters which provided for approximately ten fillings of the cell. The lid of each reservoir was threaded and sealed with an O-ring. A forty ohm immersion heater was installed into each lid to accelerate the heating of the fluid in the reservoir to near-operating temperatures.

Originally, both inlet lines and the drain line were each equipped with an electrical pulse-operated solenoid valve and a 1/8 inch Whitey needle valve. Regulation of flow rates to the cell was accomplished by using the needle valves. The solenoid latching valves, in principle, provided rapid positive on-off flow control. However, in actual use these valves presented the following problem: in the presence of certain organic liquids the valve packing swelled, rendering the valves inoperative. Also, this interaction between the fluids and the packing material resulted in contamination. In addition, the large, inherent liquid holdup within the valve cavity necessitated the continual disassembly and cleaning of the valve parts. For these reasons the solenoid valves were

deemed unreliable and their use was discontinued. The elimination of these valves provided unimpaired flow of test fluids throughout the system. This speeded cleaning of the cell and assured that the test fluids contacted only stainless steel, glass, and Teflon. Subsequent use of the needle valves for manual shut off at the beginning of each diffusion run yielded no change in the operating characteristics of the apparatus.

The diffusion cell and the two fluid reservoirs with integral tubing and valves were attached to a support bracket fabricated of two-inch angle iron. Each of the fluid reservoirs was secured to the bracket by a one-half inch threaded rod which permitted adjustments in the cell elevation. A brass cell support plate was bolted to the bracket with three one-half inch threaded rods. The cell was then attached to the brass support plate with three finely threaded machine bolts. Rough adjustments in the elevation and leveling of the cell were made by using the threaded rods; precise adjustments were accomplished with the finely threaded machine bolts. Two flat ended machine bolts were installed into the brass support plate to maintain the stability of the aligned cell.

The cell assembly was mounted in the constant temperature bath on a steel two-inch angle beam frame bolted to the optical bench. The two cross members of the frame which passed through the walls of the temperature bath were carefully shielded from

physical contact with the bath by means of cheesecloth and sponge rubber. This precaution was taken to insulate the cell from any possible disturbances or vibrations caused by the temperature bath.

Temperature Bath. The constant temperature bath was a double walled, perlite insulated box constructed of three-fourths inch plywood. The bath was supported, independently of the interferometer bench, by a metal frame bolted to the floor. Two air spaced windows of Schott BK-7 optical glass, polished to the specifications of the cell windows, were mounted into the walls in the optical path. The remaining two side walls contained plate glass viewing ports. Internally, the bath was equipped with bare wire heaters, baffles, an air circulating fan, and temperature sensing elements.

Temperatures in the air bath were controllable to within 0.01° C by a temperature controller (Hallikainen Thermotrol, Serial No. 14672); temperature fluctuations were continuously monitored with a differential temperature strip chart recorder (Hallikainen Thermograph, Serial No. 13058). The bath temperatures were sensed with unshielded nickel-wound resistance probes. During warm up periods, temperatures in the two fluid reserviors and at various points in the bath were measured with five copper-constantan thermocouples and a millivolt

potentiometer (Leeds and Northrup, No. 8686). After equilibration, the experimentally recorded temperatures were measured with two NBS calibrated platinum resistance thermometers (Leeds and Northrup, No. 8164).

One of the platinum thermometers (Serial No. 1713349) was fixed to the inner bath wall; the other thermometer (Serial No. 1715029) was placed in the thermometer well drilled into the top of the diffusion cell. Resistance measurements of the thermometers were performed with a Mueller Temperature Bridge (Leeds and Northrup, Serial No. 1699588) and a d.c. null voltmeter (Hewlett Packard Co., Serial No. 646-014808).

Camera and Film. A Nikkormat (Model FT) 35 mm camera with the lens removed was used to photograph the interference patterns. The camera was positioned with a scissor-type laboratory jack bolted to an optical mount platform.

Kodak Plus-X panchromatic film was used for the approximately one thousand two hundred photographs of interference patterns necessary for this study. This film was selected for the following reasons: (1) the relatively high exposure index (ASA 125) permitted short exposure times and (2) the extremely fine grain provided excellent picture sharpness, even for great degrees of enlargement.

Time Measurement. The elapsed time during a diffusion experiment was measured with an electric timer (Precision Timer

Co.) accurate to one-tenth of a second. The timer was located in a control box attached to the optical bench beside the camera. A second timer (R. W. Cramer Co.), also located in the control box, served as a back-up and check on the principal timing system.

Fringe Measurement System

A coordinate measuring microprojector (George Sherr Co., Inc.) was used to analyze the photographic negatives of the interference patterns.

In this precision measuring device a high intensity beam is passed through a focusing lens which in turn directs the light through a negative mounted on a glass windowed micrometer table. The beam is magnified twenty times and then projected onto a circular ground glass screen. Cross hair reference lines etched on the screen are used to align the negative and to mark the end points in a line of measure. The spring loaded micrometer table can be moved horizontally along two perpendicular axis by means of two precision micrometers (Tubular Micrometer Co.). Through this motion, the position of the table may be adjusted and measured to within 0.00005 inches.

Viscosity Apparatus

Viscosities were measured using a standard Ostwald viscometer. The viscometer was calibrated at each temperature of interest with distilled, de-ionized water containing less than

0.1 ppm impurities. Densities and viscosities of the water were obtained from the literature (53, 87).

The viscometer was suspended in a standard five gallon glass bath filled with water. The temperature of the water bath was maintained to within 0.1° C with a Thermistemp temperature controller (Yellow Springs Instrument Co., Model 63-RA). Bath temperatures were measured with a calibrated mercury thermometer; the temperature variations were further monitored with a calibrated Beckman differential thermometer. Flow times through the capillary section of the viscometer were measured with a precision stop watch.

Density Apparatus

Liquid densities were determined with a Chainomatic specific gravity balance (Christian Becker, Serial No. B-47763). The balance had a specific gravity range of 0 to 2.0000 with a vernier directly readable to four decimal places.

Chemicals

All chemicals used in this study were of the highest purity commercially available. The following is a listing of the chemicals together with the manufacturers' purity specifications:

J. T. Baker Co.

Methylcyclohexane	"Analyzed" Reagent Lot No. 34472	
	Boiling Range	100.8°-101.0° C
	Residue after evaporation	0.0002%

J. T. Baker Co. (con't.)

Sucrose	"Analyzed" Reagent Lot No. 34261
	Impurities within 0.03%

Mallinckrodt Chemical Works

Toluene	"Analytical Reagent" Lot VEC
	Boiling Range 110.6 1°C
	Maximum impurities 0.2%
Aniline	"Analytical Reagent" Lot VDL
	Boiling Range 184.4 1.5° C
	Maximum impurities 0.02%

The methlcyclohexane, toluene, and aniline reagents were used as obtained from the manufacturer, without further purification. The sucrose was dried in an electric oven at 100° C prior to use. Water used in the sucrose solution preparation was triple distilled and deionized and had impurities to less than 0.1 ppm.

As a further check on the purity of the chemicals, refractive indices were determined at 20° C with a Bausch and Lomb Precision Refractometer. The results with corresponding literature values are presented below:

Reagent	Refractive Index, 20° C	
	Experimental	Literature (53)
Methlcyclohexane	1.4232	1.4235
Toluene	1.49689	1.49693
Aniline	1.5861	1.5863

CHAPTER IV

EXPERIMENTAL PROCEDURE

Alignment of Diffusion Apparatus

One of the most important tasks involving the use of an interferometer for diffusion measurements is the accurate alignment of the optical system and the diffusion cell. In the present study, the alignment was accomplished using procedures developed by Merliss (68). These procedures, which take advantage of the laser light source as a precise aligning instrument, have been adequately described in the above mentioned reference and require no further description.

At the outset of the present investigation, the entire optical system of the interferometer was completely disassembled and thoroughly cleaned. The system was then reassembled and carefully realigned. Thereafter, the system was checked on a regular basis to insure proper alignment throughout the course of the experimental work.

Solution Preparation

Immediately prior to the start of each diffusion experiment

a stock test solution of known composition was prepared. In order to obtain a set of test mixtures near the desired composition, the necessary volumes of each constituent were approximately determined from pure component density data. The composition of the stock solution was then obtained gravimetrically through three separate weighings.

A glass sample bottle and its Teflon-lined screw cap were carefully cleaned using the following procedure: washings with chromate solution were alternated with thorough rinsings with distilled water. The bottle and cap were then dried before being tared. The pre-determined volume of the first reagent was then transferred to the bottle by means of a pipette and the second weighing was made and recorded. The last weighing was made after the required volume of the second reagent was introduced into the sample bottle. These three weighings during the preparation of the stock solution permitted the calculation of its composition.

The stock solution was then divided into two portions. One of the portions was again weighed and a small additional amount of one reagent was added to this portion to achieve the desired composition difference between the two portions. These two portions were then used as the test solutions. The test solutions, due to the small composition difference, were of slightly different density. Hereafter, the solutions of high and low density

will be referred to as the "heavy" and "light" solutions, respectively.

During preparation, the solutions were capped whenever possible. After the preparation was completed, the solutions were temporarily stored in the tightly capped sample bottles. Plastic tape was applied around the caps to insure an air-tight seal.

Procedure for Diffusion Runs

Numerous experiments were performed in developmental work using sucrose solutions. From this preliminary work, there evolved a systematic procedure for carrying out diffusion measurements. A description of this procedure follows.

The first step in preparation for each diffusion run was the thorough cleaning of the cell, fluid reservoirs, and associated valves and tubing. For this cleaning operation, the cell assembly was removed from the temperature bath to a frame above a laboratory sink. Prior to disassembly, the entire cell system was flushed with generous amounts of reagent acetone and distilled water. The cell was then partially disassembled. The two cell windows and the slit plates were removed and carefully washed and dried. Also, the inside surfaces of the cell cavity and the fluid reservoirs were thoroughly cleaned. Valve stems from each needle valve were removed and cleaned. Upon

reassembly, the entire apparatus was dried for at least eight hours with a stream of filtered compressed air.

After proper alignment of the cell was accomplished, the bracket of the cell assembly was securely bolted to the support members within the constant temperature cabinet. Next, the two drain lines, the vent line, and the three valve stem extensions were connected. After all valves, except the cell vent valve, were closed, the test liquids were quickly transferred to the fluid reservoirs. The heavy and light solutions were stored in the reservoirs connected to the bottom and top of the cell, respectively.

Fittings installed in the reservoir lids were connected to a 1/8 inch stainless steel vent line which could be opened to the atmosphere to permit gravity flow from the reservoirs. The valve of the heavy solution reservoir was opened first to fill the cell cavity. Next the valve controlling the flow through the cell slits was opened and about one hundred milliliters of the heavy solution was allowed to flow to the drain. Similarly, the flow valve in the line connected to the bottom of the cell was opened and the solution was permitted to drain for a few moments. Thus, all outlet lines from the cell were filled with solution. After the two drain valves were closed, a slight vacuum was established in the cell vent line in order to completely fill the cell cavity with fluid. After the last

traces of air were eliminated, all valves were closed and the heavy solution reservoir was refilled.

Thermocouples were positioned in each of the fluid reservoirs and at the top, center, and bottom of the bath. Leads from the two platinum capsule thermometers and from the two immersion heaters in the reservoir lids were then connected to their respective terminal boards. Each temperature measuring device was then quickly checked to make certain that all connections were in order. Finally, the cell assembly was given a thorough visual inspection.

After the lid of the temperature bath was bolted into position, the air circulating fan was started. Next, power to both the control and auxiliary bath heaters was switched on. The Thermotrol controller was set near the desired temperature control point as determined from previous experiments. The rheostats controlling both heaters were adjusted to maximum power (approximately 670 watts) during this initial heating period.

The rate of temperature increase within the air bath was continuously monitored with the Thermograph differential temperature recorder. As the temperature in the bath approached the desired temperature, the power load of the auxiliary heater was reduced. When the Thermotrol began to function on control, the input to the control heater was likewise reduced.

Temperatures in the fluid reservoirs and in the bath were measured periodically during the heating period with the thermocouples. The immersion heaters in the test fluids were used to decrease the temperature lag between the test liquids and the bath. In the case of the non-aqueous solutions, the temperature lag was often small, and the use of the heaters was not necessary.

After no difference in temperature could be detected between the thermocouples, the platinum capsule thermometer located on the bath wall was used to measure the air temperature. Fine adjustments in the controller set point were made from these precise measurements. Once the system was stabilized at the desired temperature, measurements from the thermometer on the bath wall were compared with measurements from the thermometer inserted in the cell wall. When these measurements agreed to within 0.01° C, the system was allowed to equilibrate for at least four additional hours. During this equilibration period, the Thermograph recorder, with full differential span set at 0.1° C, was used to monitor temperature variations to insure that they remained within 0.01° C.

Interfacial boundary formation between the two test solutions was initiated after temperature equilibrium was established. This procedure is described in detail in Appendix A. A distinct interfacial boundary was achieved by allowing test solutions to flow into the cell from the top and bottom while withdrawing fluid

through the horizontal slits centered along the cell walls. The boundary development was followed visually through the camera view-finder. When a sharp interface was obtained, the experimental run was initiated. A photograph of an initial interface is presented in Figure 3.

A series of at least thirty photographs of the changing interference patterns were taken throughout the duration of the experimental run. The elapsed time of each photograph was measured to within 0.1 seconds with the timer. Each time was then recorded with the corresponding frame number of the film.

As the diffusion process progressed, the rate of movement of the interference pattern decreased. Consequently, the time between successive exposures was increased. In the early stages of fringe movement, exposures were made every twenty-five seconds for approximately three hundred seconds. After these initial photographs were obtained, the time between exposures was varied between fifty and two hundred and fifty seconds which was dependent upon the observed rate of movement. From preliminary tests, it was determined that a slight overexposure of the negative, equivalent to a shutter speed of 1/125 second, yielded the most distinct images.

Interpretation of Data

For the cell geometry used in the present study, Equation (2) is solved using the initial condition that the two test

solutions of concentration C_0 and C_1, are initially separated by a sharp interface in an infinitely long test cell. The boundary conditions and the corresponding solution may be written as follows:

$$t = 0 \qquad \frac{\partial C_A}{\partial x} = 0 \quad \text{for all } x \neq 0$$

$$t > 0 \qquad C_A = C_{A1} \qquad x \to \infty$$

$$t > 0 \qquad C_A = C_{A0} \qquad x \to -\infty \tag{59}$$

$$\frac{C_A(x, t) - C_{A0}}{C_{A1} - C_{A0}} = \frac{1}{2}\left[1 + \operatorname{erf}\left(\frac{x}{4D_{AB}t}\right)\right] \tag{60}$$

Equation (60) relates the concentration of component A for a binary solution at a point, x, and time, t, to the original concentrations of the two diffusing solutions and the mutual diffusion coefficient. Relating Equation (60) to the interference patterns produced by the interferometer is accomplished by use of an expression for the optical path length.

The optical path length, Z, is defined as the product of the refractive index, n, and the geometrical length, a, through the test cell. Over small concentration intervals, the refractive index of solutions may be taken to vary linearly with concentration. The concentration of component A is then related to the optical path length, by

$$Z(x, t) = an = a\left[c_o + c_1\left(C_A(x, t) - C_{A0}\right)\right] \tag{61}$$

Substituting this relationship into Equation (60) results in

$$\frac{Z(x,t) - Z_0}{Z_1 - Z_0} = \frac{1}{2}\left[1 + \text{erf}\left(\frac{x}{4D_{AB}t}\right)\right] \tag{62}$$

where Z_0 and Z_1 are the optical path lengths which correspond to the concentrations C_{A0} and C_{A1}, respectively.

Differentiation of Equation (62) with respect to position yields the optical path gradient equation:

$$\frac{\partial Z(x,\ t)}{\partial x} = \frac{Z_1 - Z_0}{2\sqrt{\pi D_{AB}t}} \exp\left(\frac{-(2x)^2}{8D_{AB}t}\right) \tag{63}$$

The interference patterns produced by the birefringent interferometer are optical path gradient profiles represented by Equation (63). Thus, it has been demonstrated that these Gaussian-shaped curves are directly related to the concentration gradient profiles of the diffusing solutions.

Evaluation of Photographs

Figure 3 gives an example of a set of four photographs taken during a diffusion run with the sucrose-water system. The first frame represents a typical initial interface as observed at the temperature cabinet window. The remaining photographs are interferograms taken during the experiment. The interference fringes are vertical in the regions of the cell cavity which contain solutions of constant composition.

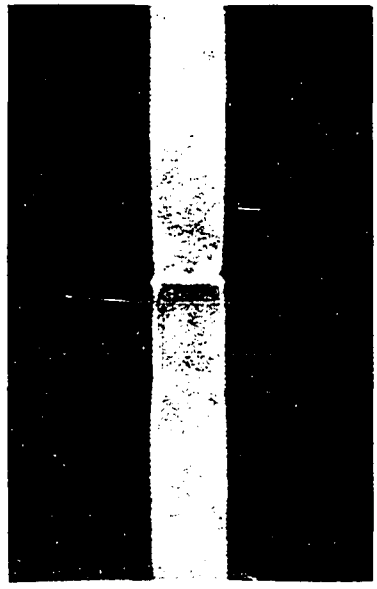

Initial Interface

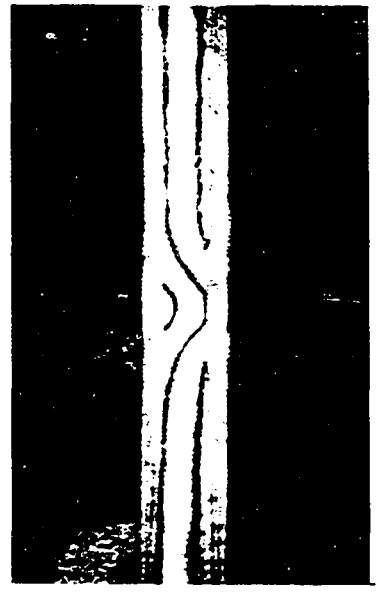

t = 1600 sec

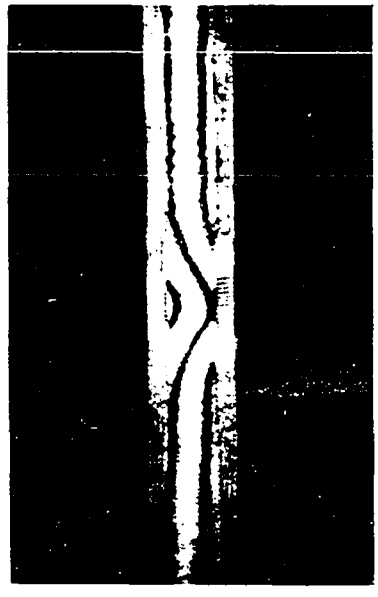

t = 5010 sec

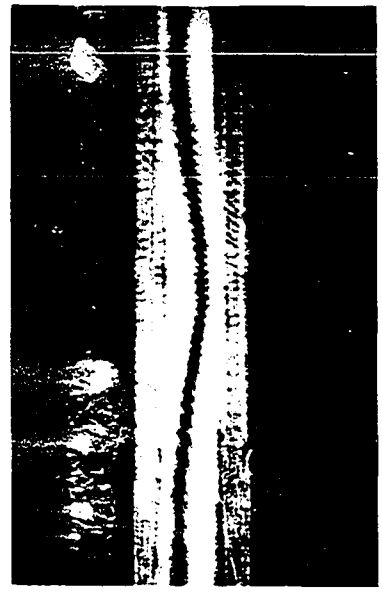

t = 36,000 sec

Figure 3. Photographs of Initial Interface and Interference Patterns

In the central region of the cell where there is a change in composition due to the diffusion process, the fringes curve in a bell shape which is typical of a Gaussian-type distribution profile. It was the measurement of changes in this bell-shaped profile which yielded the mutual diffusion coefficient.

The distance across the Gaussian-type profile, w, at a reference gradient level, h, was measured with the microprojector. A diagram depicting these variables is given in Figure 4. Each measured distance was then scaled with the proper magnification factor as determined from the known width of the cell cavity. These scaled measurements, together with their respective coordinate times, provided the necessary data for the calculation of the binary diffusion coefficient.

Reduction of Data

Methods of data reduction used in previous studies (15, 68, 98) utilized only a small percentage of the experimental points obtained during each diffusion run to arrive at a binary diffusion coefficient. In the present study, a non-linear regression method of data analysis was developed. This technique permitted the utilization of all the experimental measurements to determine the value of the diffusion coefficient. Development of the mathematical model for this least squares process follows.

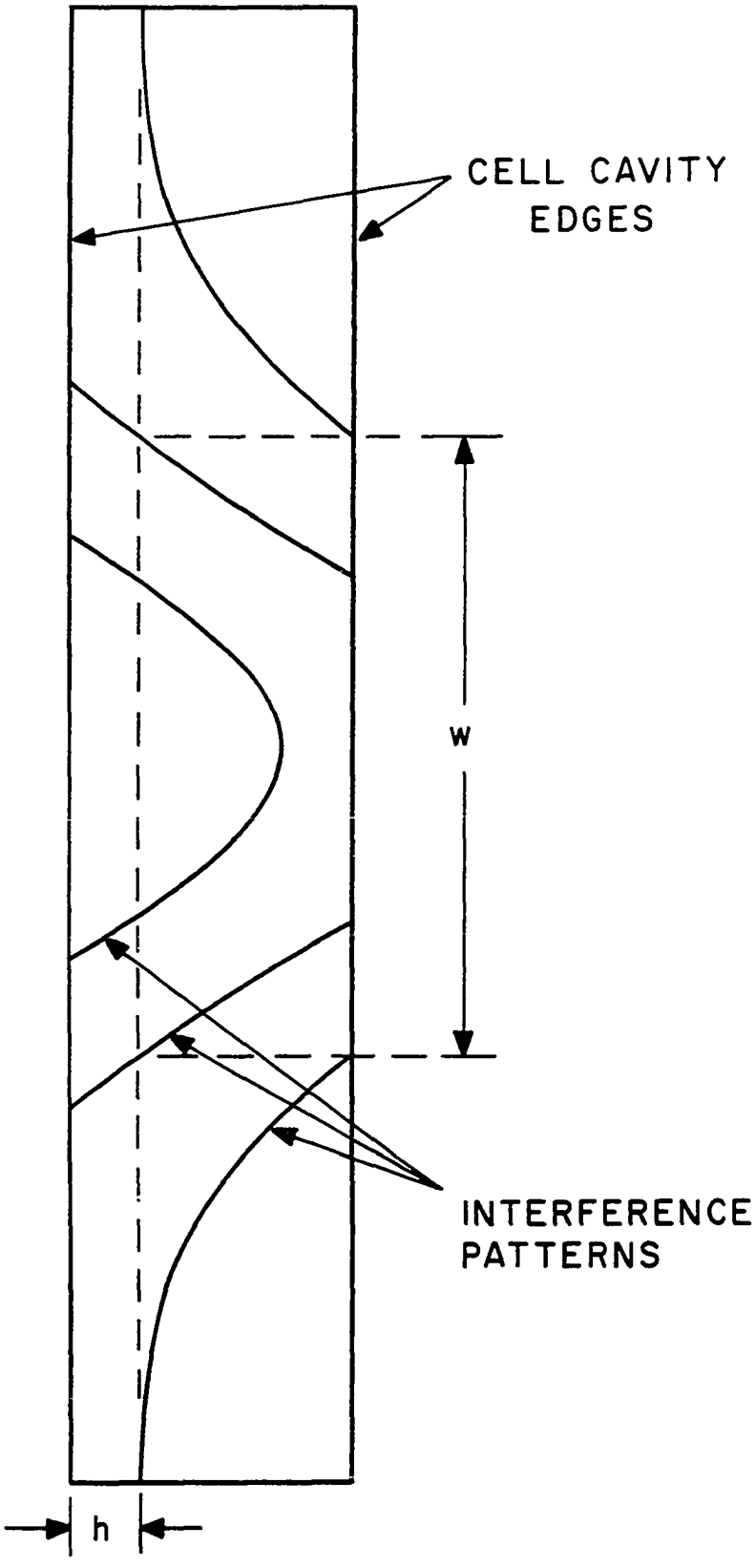

Figure 4. Illustration of Measurement Performed on each Interference Pattern

It must be remembered that h, as illustrated in Figure 4, represents a constant value of the optical path gradient. Therefore, the gradient at h at some time, t, is equal to the gradient at h at any other time, t_i. For convenience, a reference time t_m is selected as that time at which the width of the gradient profile is a maximum. Utilizing these facts, the following equality may be written

$$\frac{1}{t_i} \exp\left(\frac{-(2x_i)^2}{8D_{AB}t_1}\right) = \frac{1}{t_m} \exp\left(\frac{-(2x_m)^2}{8D_{AB}t_m}\right). \tag{64}$$

Now at t_m, the following relationship holds

$$(2x_m)^2 = 8D_{AB}t_m. \tag{65}$$

Substituting Equation (65) into Equation (64) and rearranging gives

$$(2x_i)^2 = 8D_{AB}t_i \left[1 + \ln\left(\frac{t_m}{t_i}\right)\right] \tag{66}$$

Equation (66) relates the fringe separation, $2x_i$, to the coordinate time, the time of maximum fringe separation, and the binary diffusion coefficient. This result is valid only if diffusion is initiated from an infinitely sharp interface.

Experimentally, it is not possible to establish an infinitely sharp interfacial boundary between the test solutions. However, it is possible to mathematically correct for this

imperfect initial condition by determining a zero time correction, t_0. This correction is then added to each experimentally recorded time. Considering the zero time correction, Equation (66) may be written:

$$(2x_i)^2 = 8D_{AB}(t_i + t_o)\left[1 + \ln\left(\frac{t_m + t_o}{t_i + t_o}\right)\right] \qquad (67)$$

This equation is then used as the regression model for determining the "best" values of the diffusion coefficient from a set of experimental measurements.

The process of fitting Equation (67) to the data points was based on the criterion that the sum of the squared deviations of the observed values from the corresponding values predicted by the model equation be a minimum. A digital computer program employing a Gauss-Newton regression procedure was used to carry out the necessary computations. Details of the development and this computational scheme are given in Appendix B. The computer program is presented in Appendix C. Briefly, the method consisted of expanding the function $(2x_i)^2$ in a Taylor series around first estimates of the diffusion coefficient, zero time correction, and time of maximum fringe separation. The expansion was truncated after the second term. The resulting linearized function was used to calculate corrections to update the original estimate of the parameters. Values of D_{AB}, t_m, and t_0 were iterated upon until the least squares

criterion was satisfied. The final value of D_{AB} was then the experimentally determined diffusion coefficient.

The present non-linear regression method of data reduction has definite advantages over previous methods of data analysis. As has been noted, the method utilizes all the data points to arrive at a single value of the diffusion coefficients. Previous methods often used only two data points to calculate the experimental value. Second, previous calculational schemes generally involved the assumption that the zero time correction is small. Then, limiting assumptions made possible the neglecting of high order terms involving the time correction. This assumption is not necessary in the present analysis. Finally, estimates of the standard errors of the regression variables used in the present method are directly obtainable from an analysis of the fit of the observed points to the model equation.

Confirmation of Technique

The validity of any experimental technique must be confirmed prior to its extension to previously unstudied systems. To test both the experimental apparatus and the method of data reduction, measurements were made on sucrose-water solutions. This system was chosen because sucrose-water diffusion coefficients have been measured by a variety of experimental methods and are well defined in the literature (1, 15, 19, 47, 91).

During the various stages of development of the experimental technique, numerous test runs were made with the aqueous sucrose solutions. These first experiments were conducted to determine what further work was necessary to improve the accuracy of the apparatus. After the final state of the technique had been achieved and experimental design had been finalized, actual data runs were performed.

Values of the diffusion coefficients for the sucrose-water system were determined at 25 $\pm$ 0.01^{o} C. Three values at an average concentration of 0.75 grams of sucrose per 100 millileters of solutions and one value at a concentration of 0.05 grams of sucrose per 100 millileter are presented in Table 1. For these data, the difference in concentration between the test solution was within 0.1 weight per cent. The three values at 0.75 gm/100 mls. have an average absolute deviation of 0.17 per cent from their mean value of 5.175 x 10^{-6} cm^2/sec.

A comparison with previously reported data is shown in Figure 5. It should be noted that the data chosen for this comparison were obtained by means of some type of optical technique. Akeley and Gosting (1), Gosting and Morris (47), and Riley and Lyons (91) used the Guoy method; Chatterjee (19) used the Jamin interference technique; and Bryngdahl (15) employed a single Savart plate birefringent interferometer.

TABLE 1

MUTUAL DIFFUSION COEFFICIENTS FOR THE

SUCROSE-WATER SYSTEM AT 25° C

Average Sucrose Concentration grams/liter	$D_{AB} \times 10^6$ sq.cm./sec.
0.500	5.23
7.500	5.17
7.500	5.19
7.500	5.17

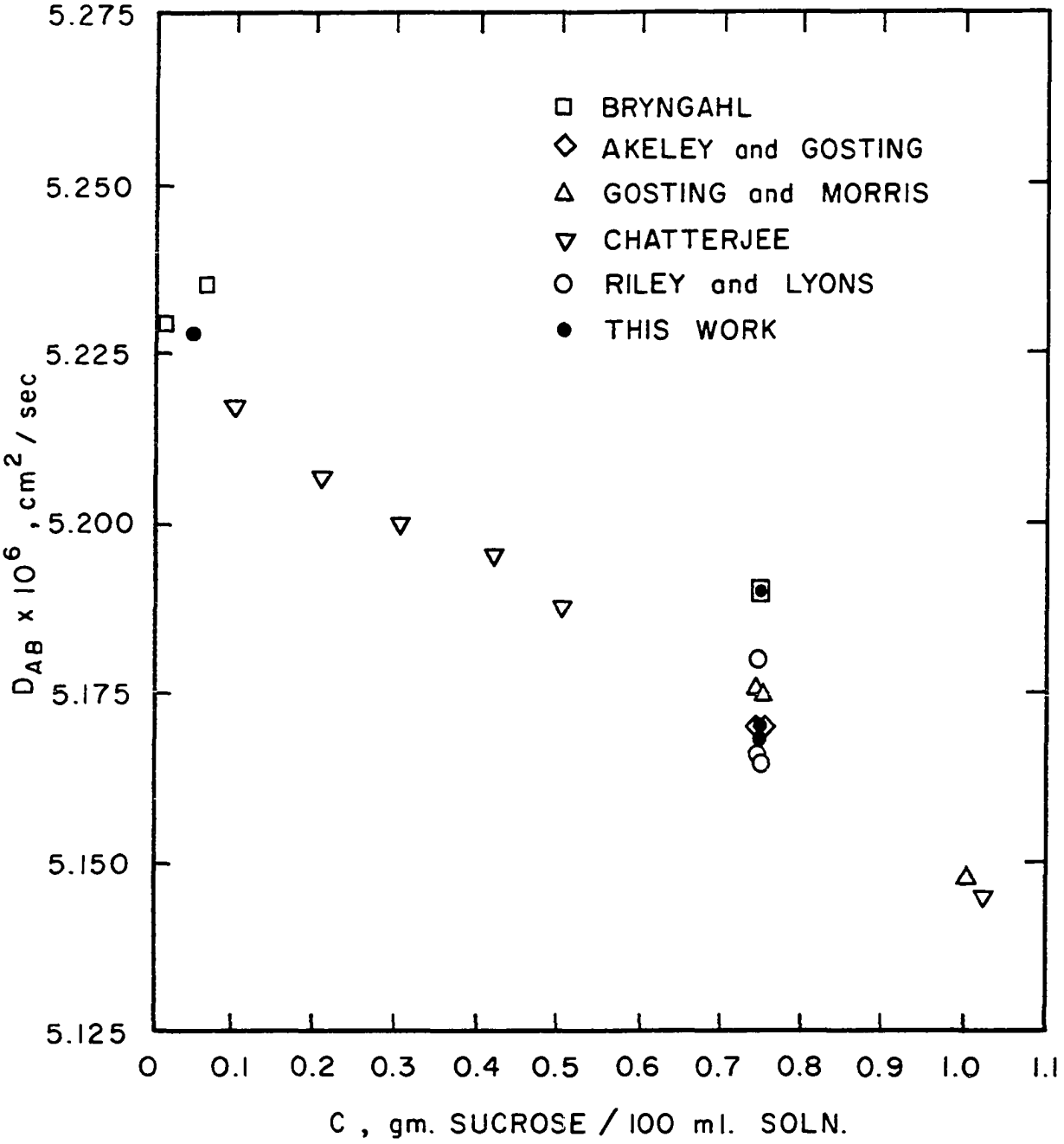

Figure 5. Diffusion Coefficients for the Sucrose-Water System at 25° C

CHAPTER V

EQUATION DEVELOPMENT

The need for an accurate relationship for the prediction of the concentration dependence of diffusion coefficients is well defined in the literature. Several equations have been presented, but their use is limited to ideal or near-ideal solutions (see Chapter II). However, the systems studied in this work were chosen for their non-ideality, and as such, prior-art predictive techniques provided a poor description of their behavior. Thus, an accurate description of diffusional behavior, as a function of concentration, for the non-ideal systems studied here, was developed.

For ideal systems, i.e., those which obey Raoult's law, the diffusivity is generally taken to be a linear function of concentration. However, for systems which deviate positively from Raoult's law, there is a negative departure from the assumed ideal linear behavior. Similarly, the converse is true for systems which deviate negatively from Raoult's law. All of the binaries used in this study exhibit positive deviations from Raoult's law. Thus, the concentration dependence

of the diffusion coefficients is exemplary of this more prevalent non-ideal behavior.

In order to describe the diffusivity over the entire concentration range, an expression was developed from a consideration of the concentration dependence of the friction coefficients. The basis for this development is the use of the statistical mechanical expression for the mean frictional force on a molecule of species α in a γ component system at constant temperature and pressure:

$$F_{\alpha}^{(1,1)^*} = \frac{d\mu_{\alpha}}{dx} = \sum_{\beta=1}^{\gamma} C_{\beta}\xi_{\alpha\beta}(U_{\alpha} - U_{\beta}) \tag{68}$$

For each component of a binary mixture, Equation (68) can be written as:

$$\frac{d\mu_A}{dx} = -C_B\,\xi_{AB}(U_A - U_B) \tag{69}$$

$$\frac{d\mu_B}{dx} = -C_A\,\xi_{BA}(U_B - U_A)\,. \tag{70}$$

Defining U^{O} as the velocity of the volume fixed reference frame, then

$$\frac{d\mu_A}{dx} = -C_B\,\xi_{AB}\left((U_A - U^{O}) - (U_B - U^{O})\right). \tag{71}$$

A similar expression is obtained for the second component. The molar fluxes in this frame of reference are then

$$J_A = C_A(U_A - U^{O}) \tag{72}$$

and

$$J_B = C_B(U_B - U^O). \tag{73}$$

Substituting these equations into Equation (71) yields

$$\frac{d\mu_A}{dx} = -C_B \xi_{AB} \left(\frac{J_A}{C_A} + \frac{J_B}{C_B} \right) \tag{74}$$

For a plane across which no net volume transfer occurs, the following relationship holds:

$$J_A \bar{V}_A + J_B \bar{V}_B = 0. \tag{75}$$

Considering Equations (74) and (75) and eliminating J_B yields

$$\frac{d\mu_A}{dx} = -C_B \xi_{AB} \left(\frac{J_A}{C_A} + \frac{J_A \bar{V}_A}{\bar{V}_B C_B} \right) \tag{76}$$

or

$$\frac{d\mu_A}{dx} = -\xi_{AB} J_A \left(\frac{\bar{V}_B C_B + \bar{V}_A C_A}{C_A \bar{V}_B} \right). \tag{77}$$

From Equation (77), the sum, $\bar{V}_B C_B + \bar{V}_A C_A$, is unity and Equation (77) reduces to

$$J_A = \frac{-C_A \bar{V}_B}{\xi_{AB}} \frac{d\mu_A}{dx}. \tag{78}$$

On a molar basis, J is the flux in gram-moles/cm^2sec; C is the concentration in moles/cm^3; and $\bar{V}$ is the partial molar volume.

The definition of the chemical potential, with constant temperature and pressure conditions, is

$$\frac{d\mu}{dx} = RT \frac{d\ln a}{dx}. \tag{79}$$

Combining Equations (77) and (78) yields

$$J_A = - \frac{\bar{V}_B RT}{\xi_{AB}} \frac{d\ln a}{d\ln C_A} \frac{dC_A}{dx}. \tag{80}$$

The use of the volume fixed reference plane implies that there is a negligible change in volume upon mixing. This assumption makes possible the use of Fick's first law, given by Equation (1), to describe the experimental flux and may, therefore, be equated to the theoretical flux. Thus,

$$D_{AB} \frac{dC_A}{dx} = \frac{\bar{V}_A RT}{\xi_{AB}} \frac{d\ln a}{d\ln C_A} \frac{dC_A}{dx}. \tag{81}$$

It then follows that

$$D_{AB} = \frac{\bar{V}_B RT}{\xi_{AB}} \frac{d\ln a}{d\ln C_A}. \tag{82}$$

This result has previously been derived by Bearman (41).

Hartley and Crank (40) have shown that

$$\frac{d\ln X_A}{d\ln C_A} = \frac{X_B}{\bar{V}_B C_B}. \tag{83}$$

Therefore,

$$D_{AB} = \frac{RT}{\xi_{AB}} \frac{X_B}{C_B} \frac{d\ln a}{d\ln X_A}. \tag{84}$$

Now the mole fraction X_B is defined as $C_B/(C_A + C_B)$ so that

$$D_{AB} = \frac{RT}{\xi_{AB}} (\bar{V}_A X_A + \bar{V}_B X_B) \frac{d\ln a}{d\ln X}. \tag{85}$$

A similar result was obtained previously by Rathbun (68), who considered the Prigogine "ideal" associated solution model in his development.

Rathbun, in his discussion of friction coefficients, followed the usual procedure of evaluating them at the limiting mole fractions. As $X_A \to 0$, $D_{AB} \to D^o_{AB}$, and

$$\xi_{AB} = \frac{\bar{V}_B RT}{D^o_{AB}}. \tag{86}$$

Also, as $X_B \to 0$, $D_{AB} \to D^o_{BA}$, and

$$\xi_{BA} = \frac{\bar{V}_A RT}{D^o_{BA}}. \tag{87}$$

Combining these results with Equation (84) yields

$$D_{AB} = (X_A D^o_{BA} + X_B D^o_{AB}) \frac{d\ln a}{d\ln X_A}. \tag{88}$$

As mentioned in the literature review, the form of Equation (87) has been derived by several investigators.

It has been pointed out that Equation (88) implicitly requires the use of the geometric mixing rule for the friction coefficients (48), i.e., $\xi_{AB} = (\xi_{AA}\, \xi_{BB})^{1/2}$. In general, it is well known that for the liquid state this mixing rule is

unsatisfactory for the representation of experimental data. Seemingly, improvements may be made through modification of the geometric mixing rule. With this objective in mind, Loflin and McLaughlin (48) presented a theoretical investigation of the relationships among friction coefficients. Their results show that for ideal mixtures, which approximate closely to regular solution theory, the geometric-mean relationship is approximately true. For less ideal systems, it is suggested that the thermodynamic factor overcorrects the effect of the $(X_A D^{o}_{AB} + X_B D^{o}_{BA})$ term. This conclusion has also been reached by Rathbun (68).

However, it is possible that the activity term in Equation (88) does not overcorrect and that perhaps the concentration dependence of the friction coefficient is in need of better description. This is supported to some degree by Equation (39) which has been developed by Bearman (41). With this in mind, a suitable description of the concentration dependence of the friction coefficients was sought.

As previously mentioned, the first approximation to the friction coefficient is made through the use of the geometric mixing rule. In this instance, the friction coefficient is a constant equal to the square root of the product of the friction coefficients at infinite dilution. This procedure yielded good results for near-ideal situations. However, there are discrepancies for non-ideal systems.

The next logical step in this procedure is to assume that ξ_{AB} can be approximated by a linear relationship in concentration, ie.,

$$\xi_{AB} = \overset{o}{\xi}_{AB}X_A + \overset{o}{\xi}_{BA}X_B \cdot \tag{89}$$

Rewriting Equation (84) yields

$$D_{AB} = \frac{RT}{\overset{o}{\xi}_{AB}X_A + \overset{o}{\xi}_{BA}X_A} (\bar{V}_A X_A + \bar{V}_B X_B) \frac{d\ln a}{d\ln X_A} \cdot \tag{90}$$

Recalling that

$$\lim_{X_A \to 0} (D_{AB}) = D^{o}_{AB} = \frac{RTV_B}{\overset{o}{\xi}_{BA}} \tag{91}$$

and

$$\lim_{X_B \to 0} (D_{AB}) = D^{o}_{BA} = \frac{RTV_A}{\overset{o}{\xi}_{BA}} \cdot \tag{92}$$

At this point, it is assumed that the molar volume of a component upon mixing may be approximated by the molar volume of a pure component, i.e., $\bar{V}_A = V_A$ and $\bar{V}_B = V_B$. Equation (90) can then be written in terms of infinite dilution properties as:

$$D_{AB} = \frac{\overset{o}{\xi}_{AB}D^{o}_{BA}X_A + \overset{o}{\xi}_{BA}D^{o}_{AB}X_B}{\overset{o}{\xi}_{AB}X_A + \overset{o}{\xi}_{BA}X_B} \frac{d\ln a}{d\ln X_A} \cdot \tag{93}$$

This equation represents an improvement over the one developed using the geometric mixing rule. However, deviations still resulted for highly non-ideal systems.

From an inspection of Equations (88) and (93), it can be seen that these relationships, while accounting for solution thermodynamics, do not incorporate an affect of solution viscosity. Carmen and Stein (70), and Leffler and Cullinan (75) have derived predictive expressions with viscosity correction terms applied to the two infinite diffusivities. It seems, however, more reasonable to apply this type of correction to the friction coefficients. Hence, the following empirical relationship for the concentration dependence of friction coefficients was developed.

$$\xi_{AB} = \eta_M \left(\frac{X_A}{\eta_A} \xi^o_{BA} + \frac{X_B}{\eta_B} \xi^o_{AB} \right) \tag{94}$$

Substituting this relationship into Equation (85), the equation for the mutual diffusivity may be written as:

$$D_{AB} = \frac{\eta_A \eta_B RT (V_A X_A + V_B X_B)}{\eta_m (X_A \xi_{BA} + X_B \xi_{AB})} \frac{d\ln a}{d\ln X_A} . \tag{95}$$

Equation (95) was used to calculate the diffusion coefficients over the entire concentration range for the systems studied in this work.

CHAPTER VI

EXPERIMENTAL RESULTS AND DISCUSSION

This section is devoted to the presentation of the experimental data. Detailed discussions of the data, in light of presently existing correlations and theory, are also presented. Also, the expression for the concentration dependence of diffusion coefficients is compared to experimental data. This equation is based on an examination of the compositional dependence of the friction coefficient.

In this research, diffusion data were obtained for each of the following systems at atmospheric pressure and at the given temperatures: (1) Toluene-methylcyclohexane at 25°, 45°, and 60° C; (2) Toluene-aniline at 25°, 45°, and 60° C; (3) methylcyclohexane-aniline at 60° C. These data are tabulated in Tables 2 through 8. The initial concentrations of the test solutions, as well as the average concentration at which the diffusion coefficient is taken to be measured, are given. Also, the standard error estimate for each experimentally determined diffusivity is listed. These results are shown graphically in Figures 6, 7, and 8. In these figures, the

TABLE 2

MOLECULAR DIFFUSION COEFFICIENTS FOR THE

TOLUENE-METHYLCYCLOHEXANE SYSTEM

AT 25° C

Mass Fraction Toluene			Mole Fraction Toluene			Diffusion Coefficient $D_{AB} \times 10^5$ cm^2/sec.	Standard Error Estimate, %
Initial		Average	Initial		Average		
Y_T'	Y_T''	$\bar{Y}_T$	X_T'	X_T''	$\bar{X}_T$		
0.0000	0.0050	0.0025	0.0000	0.0053	0.0026	1.65	0.38
0.3313	0.3354	0.3333	0.3454	0.3500	0.3477	1.61	0.22
0.6661	0.6685	0.6673	0.6801	0.6824	0.6813	1.74	0.43
0.9934	1.0000	0.9967	0.9940	1.0000	0.9970	2.21	0.16

TABLE 3

MOLECULAR DIFFUSION COEFFICIENTS FOR THE

TOLUENE-METHYLCYCLOHEXANE SYSTEM AT 45° C

Mass Fraction Toluene			Mole Fraction Toluene			Diffusion Coefficient $D_{AB} \times 10^{5}$ $cm^{2}/sec.$	Standard Error Estimate, %
Initial		Average	Initial		Average		
Y_T'	Y_T''	$\bar{Y}_T$	X_T'	X_T''	$\bar{X}_T$		
0.0000	0.0005	0.0025	0.0000	0.0053	0.0026	2.18	0.98
0.3313	0.3354	0.3333	0.3454	0.3500	0.3477	2.16	0.15
0.6661	0.6685	0.6673	0.6801	0.6824	0.6813	2.40	0.12
0.9934	1.0000	0.9967	0.9940	1.0000	0.9970	3.09	0.46

TABLE 4

MOLECULAR DIFFUSION COEFFICIENTS FOR THE

TOLUENE-METHYLCYCLOHEXANE SYSTEM AT 60° C

Mass Fraction Toluene			Mole Fraction Toluene			Diffusion Coefficient $D_{AB} \times 10^{5}$ $cm^{2}/sec.$	Standard Error Estimate, %
Initial		Average	Initial		Average		
Y_T'	Y_T''	$\overline{Y}_T$	X_T'	X_T''	$\overline{X}_T$		
0.0000	0.0050	0.0025	0.0000	0.0053	0.0026	2.73	0.48
0.3313	0.3354	0.3333	0.3454	0.3500	0.3477	2.63	0.32
0.6661	0.6685	0.6673	0.6801	0.6824	0.6813	2.94	0.17
0.9934	1.0000	0.9967	0.9940	1.0000	0.9970	3.66	0.46

TABLE 5

MOLECULAR DIFFUSION COEFFICIENTS FOR THE

TOLUENE-ANILINE SYSTEM AT 25° C

Mass Fraction Toluene			Mole Fraction Toluene			Diffusion Coefficient $D_{AB} \times 10^5$ cm^2/sec.	Standard Error Estimate, %
Initial		Average	Initial		Average		
Y_T'	Y_T''	$\bar{Y}_T$	X_T'	X_T''	$\bar{X}_T$		
0.0000	0.0068	0.0034	0.0000	0.0069	0.0035	0.478	1.20
0.1490	0.1580	0.1535	0.1503	0.1593	0.1548	0.366	0.64
0.3333	0.3340	0.3336	0.3381	0.3408	0.3394	0.279	0.67
0.5000	0.5023	0.5012	0.5027	0.5057	0.5042	0.296	1.78
0.6667	0.6706	0.6687	0.6690	0.6730	0.6710	0.568	1.70
0.8470	0.8468	0.8469	0.8481	0.8484	0.8483	1.040	1.67
0.9942	1.0000	0.9971	0.9949	1.0000	0.9975	2.100	0.33

TABLE 6

MOLECULAR DIFFUSION COEFFICIENTS FOR THE

TOLUENE-ANILINE SYSTEM AT 45° C

Mass Fraction Toluene			Mole Fraction Toluene			Diffusion Coefficient $D_{AB} \times 10^5$ $cm^2/sec.$	Standard Error Estimate, %
Initial		Average	Initial		Average		
Y_T'	Y_T''	$\overline{Y}_T$	X_T'	X_T''	$\overline{X}_T$		
0.0000	0.0068	0.0034	0.0000	0.0069	0.0035	0.880	0.27
0.1490	0.1580	0.1535	0.1503	0.1593	0.1548	0.758	0.51
0.3333	0.3340	0.3336	0.3381	0.3408	0.3394	0.588	0.71
0.5800	0.5023	0.5012	0.5827	0.5057	0.5042	0.605	0.90
0.6667	0.6706	0.6687	0.6690	0.6730	0.6910	0.889	0.74
0.8470	0.8468	0.8469	0.8484	0.8484	0.8483	1.63	0.30
0.9942	1.0000	0.9971	0.9949	1.0000	0.9975	2.78	0.19

TABLE 7

MOLECULAR DIFFUSION COEFFICIENTS FOR THE

TOLUENE-ANILINE SYSTEM AT 60° C

Mass Fraction Toluene			Mole Fraction Toluene			Diffusion Coefficient $D_{AB} \times 10^5$ cm^2/sec.	Standard Error Estimate, %
Initial		Average	Initial		Average		
Y_T'	Y_T''	$\bar{Y}_T$	X_T'	X_T''	$\bar{X}_T$		
0.0000	0.0068	0.0034	0.0000	0.0069	0.0035	1.27	0.30
0.1490	0.1580	0.1535	0.1503	0.1593	0.1548	1.13	0.25
0.3333	0.3340	0.3336	0.3381	0.3408	0.3394	0.997	0.54
0.5000	0.5023	0.5012	0.5029	0.5059	0.5942	1.09	1.09
0.6667	0.6706	0.6687	0.6690	0.6730	0.6910	1.57	0.24
0.8470	0.8468	0.8469	0.8481	0.8484	0.8483	2.48	1.6
0.9942	1.0000	0.9971	0.9949	1.0000	0.9975	3.60	1.20

TABLE 8

MOLECULAR DIFFUSION COEFFICIENTS FOR THE

METHYLCYCLOHEXANE-ANILINE SYSTEM AT 60° C

Mass Fraction Toluene			Mole Fraction Toluene			Diffusion Coefficient $D_{AB} \times 10^5$ cm^2/sec.	Standard Error Estimate, %
Initial		Average	Initial		Average		
Y_T'	Y_T''	$\overline{Y}_T$	X_T'	X_T''	$\overline{X}_T$		
0.0000	0.0043	0.0022	0.0036	0.0000	0.0018	0.865	0.32
0.2501	0.2525	0.2513	0.2403	0.24270	0.2415	0.388	0.52
0.5009	0.5055	0.5032	0.4886	0.4921	0.4904	0.363	0.65
0.7799	0.7857	0.'828	0.7747	0.7764	0.7755	1.02	0.92
0.9966	1.0000	0.9983	0.9963	1.0000	0.9981	2.69	0.28

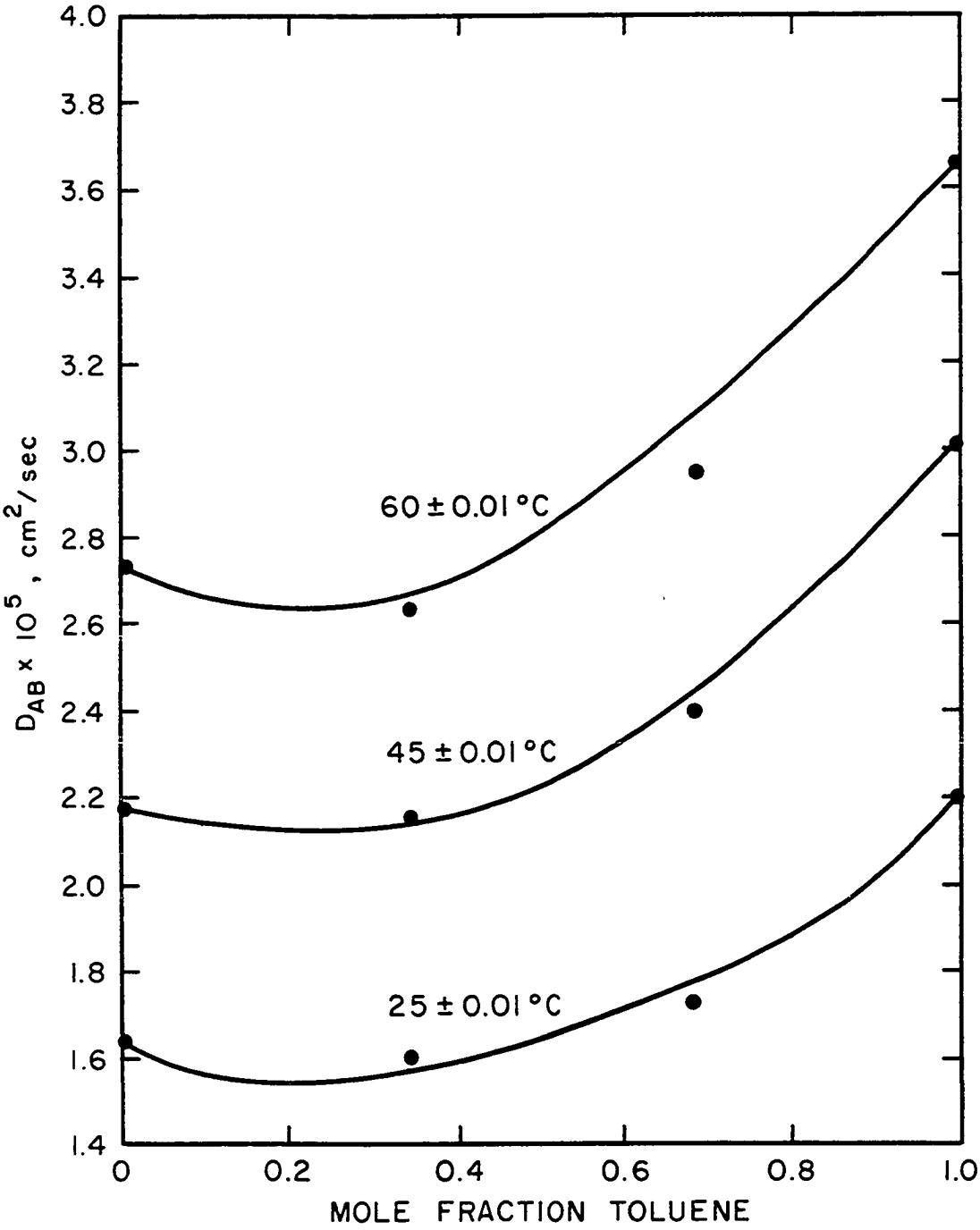

Figure 6. Comparison of Experimental Values of Diffusion Coefficients for the Toluene-Methylcyclohexane System to Predicted Values by Equation (95)

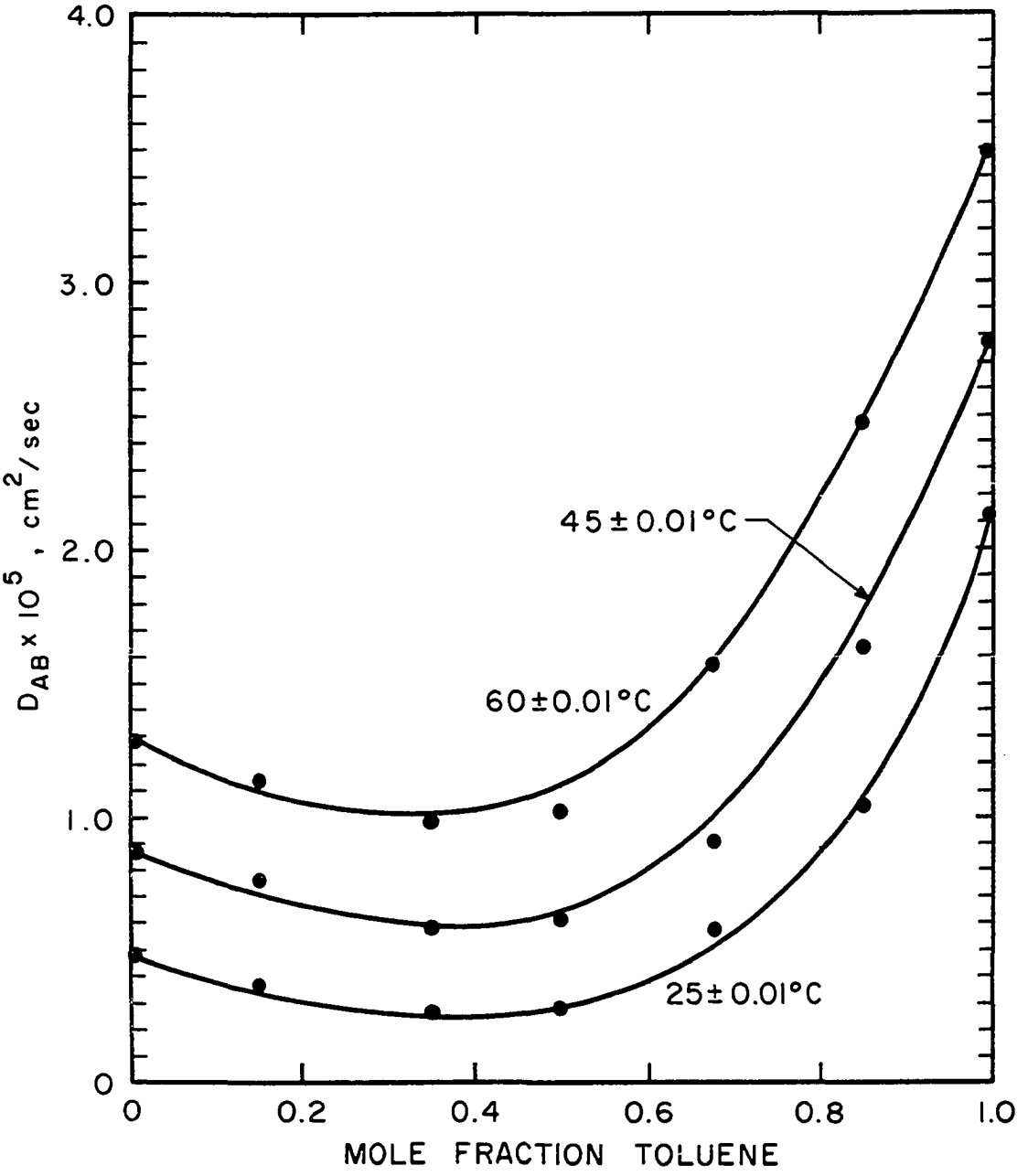

Figure 7. Comparison of Experimental Values of Diffusion Coefficients for the Toluene-Aniline System to Predicted Values by Equation (95)

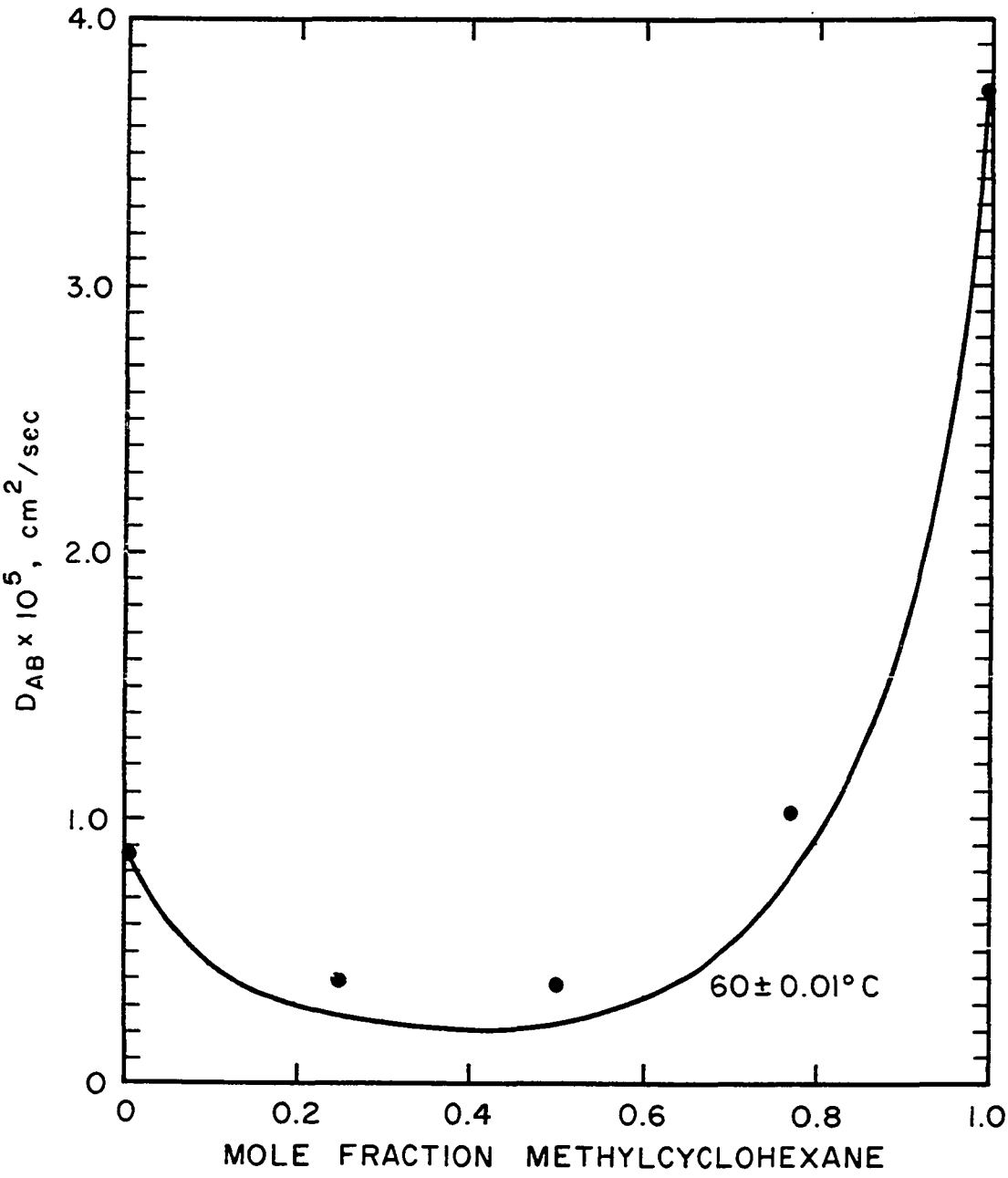

Figure 8. Comparison of Experimental Values of Diffusion Coefficients for the Methylcyclohexane-Aniline System to Predicted Values by Equation (95)

solid curves represent the correlation as developed in Chapter V. These diffusion isotherms clearly illustrate the non-ideal behavior of these systems. Each isotherm exhibits a negative departure from linearity which is characteristic of mixtures which deviate positively from Raoult's law.

The system toluene-methylcyclohexane is more nearly ideal than the other two systems studied. This system is composed of two hydrocarbons--the first, an aromatic and the latter, a saturated cycloparaffin. Although these compounds are similar in structure, methylcyclohexane does not exist in a planar conformation as does toluene. Perhaps a more important difference between methylcyclohexane and toluene is the presence of a conjugated π-structure in the aromatic. The methyl group on the aromatic ring causes a small dipole moment. Thus, toluene is a mildly polar molecule and as such can be expected to contribute to some degree of non-ideal behavior in solution.

The systems toluene-aniline and methylcyclohexane-aniline are highly non-ideal. Aniline is a highly polar molecule which has a tendency towards association. It is of interest to note that though toluene is miscible with aniline in all proportions at room temperature, methylcyclohexane is only very slightly soluble in aniline at these conditions. The enhanced miscibility of toluene is attributed to the formation of charge transfer complexes (74). These complexes result from mild electronic

interactions between the π-structure of the aromatic and the strongly polar solvent. To study this effect on diffusion, data for this system were taken at 60° C, a temperature at which the methylcyclohexane-aniline system existed in a single phase.

To provide necessary information for the correlation work, viscosity and density measurements were made for each system over the complete range of composition at each experimental temperature. These data are presented in tabular form in Appendix E.

In order to check the validity of the assumption of the linearity of refractive index with composition, experimental data at selected temperatures were obtained. Toluene-methylcyclohexane and toluene-aniline refractivity data were determined at 25° C. Methylcyclohexane-aniline data were obtained at 60° C. These results are presented in graphical form in Appendix E. The linear behavior of refractive index with concentration, especially over small concentration intervals, is clearly illustrated.

A majority of the presently available infinite dilution diffusion data represents an extrapolation from higher concentrations. Most experimental techniques, such as the diaphragm cell, are inapplicable at very low concentrations due to experimental limitations. A major advantage of the birefringent

experimental technique is that extremely small concentration differences may be used. As such, values of the mutual diffusion coefficients at infinite dilution may be obtained without extrapolation. This is well illustrated in Tables 2 through 8. As can be seen, the average concentration difference at the compositional extremes is generally less than 0.0030 solute mole fraction. This is of particular significance in that all existing correlations of the concentration dependence of diffusivities utilize infinite dilution data. Consequently, the results of these correlations are highly dependent upon accurate values of infinite dilution coefficients. For the purposes of this work, the infinite dilution coefficients are taken to be the experimentally determined values.

A summary of the infinite dilution data, along with a comparison of existing correlations, is given in Tables F-1, F-2, and F-3 in Appendix F. In general, the correlations tested provide a poor overall description of diffusion in the systems studied here. These correlations qualitatively predict the temperature dependence of the diffusivity; however, quantitative agreement with the data is inconsistent.

Agreement is especially poor in the case of aniline as the solvent. In most cases, the predictive equations yield values lower than those obtained experimentally. Similar results for the solvent aniline have been reported previously by Rao (100).

However, these data follow the empirical rule that if the diffusion coefficient is small, the temperature variation is large. This observation was originally made by Ohohm (71) and later confirmed by Longsworth (66).

From a consideration of statistical mechanics, Bearman (7) has shown that it is possible to derive the following expression for the infinite dilution coefficient,

$$D^{o}_{AB} = \frac{V_B RT}{\xi^{o}_{AB}} \tag{96}$$

where ξ^{o}_{AB} is the friction coefficient. Thus, for solute molecules in a common solvent, Equation (96) may be written

$$\frac{D^{o}_{AC}}{D^{o}_{BC}} = \frac{\xi^{o}_{BC}}{\xi^{o}_{AC}} \tag{97}$$

For structurally similar systems, such as those studied in this work, ξ^{o}_{BC} and ξ^{o}_{AC} might be expected to be approximately equal, and therefore, D^{o}_{AC} and D^{o}_{Bc} are also equal.

A similar observation has been made by Gainer (40) in a study of modified absolute rate theory equations. Using this approach, the ratios of the diffusion coefficients for two different solutes may be written as

$$\frac{D^{o}_{AC}}{D^{o}_{BC}} = \exp\left(\frac{E_{D,BC} - E_{D,AC}}{RT}\right) \tag{98}$$

He concluded that if solutes A and B have nearly identical chemical structures, it may be assumed that the diffusional activation energies are approximately equal and consequently, $D^{o}_{AC} \approx D^{o}_{BC}$.

In order to test these hypotheses, ratios of the infinite dilution coefficients for structurally similar compounds in a common solvent were calculated from the data of this work and that of Rao (81). These results are summarized in Table 9. In considering these comparisons, it must be remembered that Equations (95) and (96) were developed for molecules which exhibit no polarity effects. The calculated ratios are generally in good agreement with the arguments of Bearman and Gainer. With reference to Table 9, the following solute molecules are considered with aniline as a solvent: toluene, benzene, and methylcyclohexane. It is of interest to note that the greatest discrepancy from the hypotheses occurs for the solutes toluene and methylcyclohexane in the solvent aniline. As has been mentioned previously, toluene, an aromatic compound, is capable of exhibiting induced dipole effects and mild chemical bonding in the presence of a polar molecule such as aniline. On the other hand, methylcyclohexane should be less affected by aniline and might be expected to have a diffusion rate greater than that of toluene (92). However, experimental evidence does not confirm this postulation. This suggests that factors, other

TABLE 9

COMPARISON OF DIFFUSION RATES AT

INFINITE DILUTION FOR A COMMON SOLVENT

SOLUTE	SOLVENT	TEMP., $^{\circ}$ C	$\frac{D^{\circ}_{AC}}{D^{\circ}_{BC}}$
Methyl-cyclohexane (A)		25	1.05
	Toluene (c)		
Aniline (B)		45	1.11
		60	1.02
Toluene (A)	Methyl-cyclohexane (C)	60	1.01
Aniline (B)			
Toluene (A)			
Methyl-cyclohexane (B)	Aniline (C)	25	1.47
Toluene (A)	Aniline (C)	25	0.89
Benzene (B)			

than association, affect the value of diffusivity for these structurally similar compounds. This statement is also supported by an analysis of the diffusion of benzene in aniline. Like toluene, benzene forms charge transfer complexes in the presence of aniline. Thus, for the solvent aniline, the ratios of the diffusion rate of solute toluene to solute methylcyclohexane is expected to be lower than the ratio of solute toluene to benzene. However, as shown in Table 9, this result is not the case.

The effect of polarity is more pronounced in the consideration of changes of solvent for a given solute (Table 10). For toluene or methylcyclohexane as solute, a change from a polar to a non-polar or slightly polar solvent resulted in approximately a three-fold increase in diffusivity. On the other hand, with aniline as solute, there was very little change in diffusivity for a change in solvent.

An equation was developed for the concentration dependence of the diffusion coefficient of non-ideal systems. This expression has the form

$$D_{AB} = \frac{\eta_A \eta_B RT(V_A X_A + V_B X_B)}{\eta_m(X_A \xi_{BA} + X_B \xi_{AB})} \frac{d\ln a}{d\ln X_A} \qquad (99)$$

The application of Equation (99) to the data obtained in this

TABLE 10

COMPARISON OF DIFFUSION RATES AT

INFINITE DILUTION FOR A COMMON SOLUTE

SOLUTE	SOLVENT	TEMP., $^{\circ}$ C	$\frac{D^{\circ}_{AB}}{D^{\circ}_{AC}}$
Toluene (A)	Aniline (B)	25	0.29
	Methyl-cyclohexane (C)	45	0.40
		60	0.47
Methyl-cyclohexane (A)	Aniline (B)	60	0.24
	Toluene (C)		
Aniline (A)	Toluene (B)	60	0.92
	Methyl-cyclohexane (C)		
Aniline (A)	Toluene (B)	25	1.1
	Benzene (C)		

work is illustrated in Figures 6, 7, and 8, and is given numerically in Tables F-4 through F-8. Further comparisons with the data of Wirth (121) and Rao (81) are presented in Tables F-9 through F-12. These comparisons also include values calculated from the Vignes-Cullinan equation.

The necessary thermodynamic factors for the correlations used here were calculated through the use of the Wilson equation, a complete analysis of which can be found in Appendix D. For the system toluene-methylcyclohexane, the vapor-liquid equilibrium data of Schneider (97), Weber (116), and Ellis and Contractor (30) were used. The data of Billes and Varsanyi (10) and Schneider (116) were analyzed for the toluene-aniline system. The activity gradients were determined for the methylcyclohexane-aniline system from the data of Schneider (96) and Rock and Seig (94).

For the diffusion data tested Equation (98), in general, provided an excellent description of the concentration dependence of the diffusion coefficients.

CHAPTER VII

SUMMARY

The conclusions reached in this research are listed below.

(1) The modifications to the double Savart plate birefringent interferometer significantly improved the results attainable.

(2) An experimental technique was developed such that, as evidenced by the sucrose-water tests, precise measurements could be made.

(3) A reliable data reduction method, based on a Gauss-Newton non-linear least squares procedure, was developed.

(4) Data on the systems methylcyclohexane-toluene, methylcyclohexane-aniline and toluene-aniline over the entire composition range were obtained.

(5) For the highly non-ideal systems studied here, no one predictive equation for infinite dilution coefficients yielded consistently satisfactory results.

(6) For the systems studied, the ratios of the infinite dilution coefficients of two solutes in a common solvent approached unity. This result agreed with the limiting

conditions as predicted by the statistical mechanical theory of Bearman and the modified absolute reaction rate approach of Gainer.

(7) An equation, which employs a viscosity corrected term for the variation of friction coefficients with composition, was developed which successfully correlates the data obtained in this study.

Based on this work, the following recommendations are made:

(1) Further modifications to the equipment would improve the apparatus and increase the ease of operation. These are:

(a) leakproof seals at the test cell-glass interface could be achieved through the use of a cell constructed of Teflon;

(b) an increased number of outlets in the cell slit would improve the formation of the interface;

(c) a more powerful laser is necessary to increase resolution;

(d) a pinhole-type colimator permanently affixed to the optical bench would improve ease of alignment; and

(e) the thermocouples should be replaced by resistance thermometers.

(2) Based on the success of describing the friction coefficients in binary solutions in this work, perhaps a better representation of infinite dilution coefficients might be obtained by

a study of the temperature dependence of these coefficients.

(3) To continue this work, a further investigation of the effects of charge transfer complexes on diffusion rates should be made. Thermodynamic data is available for a number of systems of this type (74).

LITERATURE CITED

(1) Akeley, D. F., and L. J. Gosting, J. Amer. Chem. Soc., 75, 5885 (1953).

(2) Anand, A. S., Masters Thesis, University of Oklahoma, Norman, Oklahoma (1969).

(3) Anderson, D. K., J. R. Hall, and A. L. Babb, J. Phys. Chem., 62, 404 (1958).

(4) Arnold, J. H., J. Amer. Chem. Soc., 52, 3937 (1930).

(5) Barieau, R. E., and B. J. Dalton, Report Investigation 6900, U. S. Bureau of Mines (1967)

(6) Bearman, R. J., J. Chem. Phys., 65, 1961 (1961).

(7) Bearman, R. J., Ibid., 32, 1308 (1960).

(8) Bearman, R. J., and J. G. Kirkwood, J. Chem. Phys., 28, 136 (1958).

(9) Berthollet, A. L., Essai de Statique Chemique, Paris (1803).

(10) Billes, F. and Gy. Varsanyi, Acta Chem. Hung., 35, 147 (1963).

(11) Bird, R. B., Advances in Chemical Engineering, Academic Press, New York (1956).

(12) Bird, R. B., D. F. Curtiss, and J. O. Hirschfelder, Chem. Engr. Prog. Sympos. Series, 51, 69 (1955).

(13) Bird, R. B., W. E. Stewart, and E. N. Lightfoot, Transport Phenomena, John Wiley and Sons, New York (1960).

(14) Box, G. E. P., and G. A. Coutie, Proc. I. E. E., 103B, Supp. 1, 100 (1956).

(15) Bryngdahl, O., Acta Chem. Scand., 11, 1017 (1957).

(16) Bryngdahl, O., and S. Ljunggren, J. Phys. Chem., 64, 1264 (1960).

(17) Caldwell, C. S., and A. L. Babb, J. Phys. Chem., 60, 51 (1956).

(18) Carman, P. C., and L. Miller, Trans. Faraday Soc., 55, 1838 (1959).

(19) Chatterjie, A., J. Amer. Chem. Soc., 86, 793 (1964).

(20) Cullinan, H. T., Ind. Eng. Chem. Fund., 5, 281 (1966).

(21) Darken, L. S., Trans. Amer. Inst. Mining Met. Eng., 175, 184 (1948).

(22) de Groot, S. R., Thermodynamics of Irreversible Processes, Interscience, New York (1951).

(23) Dreisbach, D., Liquids and Solutions, Houghton Mifflin Co., Boston (1966).

(24) Dullien, F. A. L., Paper presented at 65th National Meeting, A. I. Ch. E., Cleveland (May, 1969).

(25) Dunlop, P. J., J. Phys. Chem., 68, 26 (1964).

(26) Einstein, A., Ann. Physik, Lpz., 17, 549 (1905).

(27) Einstein, A., Ibid., 19, 371 (1906).

(28) Einstein, A., Z. Electrochem., 14, 235 (1908).

(29) Einstein, A., Investigations on the Theory of the Brownian Movement, Meuthen and Co., London (1926).

(30) Ellis, S. R. M., and R. M. Contractor, Birmingham Univ. Chem. Engineer, 15, 10 (1964).

(31) Ewell, R. H., and H. Eyring, J. Chem. Phys., 5, 726 (1937).

(32) Exner, N., Ann. Phys., 155, 443 (1875).

(33) Eyring, H., J. Chem. Phys., 4, 283 (1936).

(34) Eyring, H., and J. O. Hirschfelder, J. Chem. Phys., 41, 249 (1937).

(35) Eyring, H., and R. P. Marchi, J. Chem. Educ., 40, 562 (1963).

(36) Eyring, H., and T. Ree, Proc. Natl. Acad. Sci. U. S., 48, 501 (1962).

(37) Fick, A., Ann. Phys., 94, 59 (1855).

(38) Fourier, J. B. J., Theorie Analytique de la Chaleur, Paris (1822).

(39) Francon, M., Opitcal Interferometry, Academic Press, Inc., New York (1966).

(40) Gainer, J. L., Ind. Eng. Chem. Fund., 5, 436 (1966).

(41) Gainer, J. L., Unpublished manuscript, (1970).

(42) Gainer, J. L., and A. B. Metzner, Proceedings of Symposium on Transport Phenomena, A. I. Ch. E. - I. Ch. E. Meeting London, 6, 74 (1965).

(43) Garner, F. H., and P. J. Marchant, Trans. Inst. Chem. Eng., London, 39, 397 (1961).

(44) Gavan, J. V., J. S. Waugh, and W. H. Stockmayer, J. Chem. Phys., 38, 287 (1963).

(45) Glasstone, S., K. Laidler, and H. Eyring, Theory of Rate Processes, McGraw-Hill, New York (1941).

(46) Gordon, A. R., J. Chem. Phys., 5, 522 (1937).

(47) Gosting, L. J., and M. Morris, J. Amer. Chem. Soc., 86, 793 (1949).

(48) Graham, T., Phil. Trans. Soc., (London), 140, 805 (1850).

(49) Hala, E., J. Pick, V. Fried, and O. Vilim, Vapour-Liquid Equilibrium, Pergamon Press, New York, 2nd ed. (1967).

(50) Hartley, G. S., and J. Crank, Trans. Faraday Soc., 45, 801 (1949).

(51) Hildebrand, J. R., and R. L. Scott, The Solubility of Non-electrolytes, 3rd ed., Dover Publications, Inc., New York (1964).

(52) Hirschfelder, J. O., D. P. Stevenson, and H. Eyring, J. Chem. Phys., 5, 896 (1937).

(53) Hodgman, C. D., Handbook of Chemistry and Physics, 44th ed. Chemical Rubber Co., Cleveland (1962).

(54) Holmes, J. J., and M. Van Winkle, Ind. Eng. Chem., 62, 21 (1970).

(55) Inglestam, E., Arkiv. Fysik, 9, 197 (1955).

(56) Inglestam, E., J. Opt. Soc. Amer., 47, 536 (1957).

(57) Innes, K. K., and L. F. Allbright, Ind. Eng. Chem., 49, 1793 (1957).

(58) Johnson, P. A., and A. L. Babb, J. Phys. Chem., 60, 14 (1956).

(59) Kincaid, J. F., H. Eyring, and A. E. Stearn, Chem. Rev., 28, 301 (1941).

(60) Kincaid, J. F., and H. Eyring, J. Chem. Phys., 6, 620 (1938).

(61) Kirkwood, J. G., R. L. Baldwin, P. J. Dunlop, L. J. Gosting, and G. Kegeles, J. Chem. Phys., 33, 1505 (1960).

(62) Laity, R. W., J. Phys. Chem., 63, 80 (1959).

(63) Leffler, J., and H. T. Cullinan, Ind. Eng. Chem. Fund., 9, 84 (1970).

(64) Lightfoot, E. N., and E. L. Cussler, Jr., Chemical Engineering Symposium Series No. 58, 61, 66 (1965).

(65) Loflin, T., and E. McLaughlin, J. Phys. Chem., 73, 186 (1969).

(66) Longsworth, L. G., J. Chem. Phys., 58, 778 (1954).

(67) Lusis, M. A., and G. A. Ratcliff, Can. J. Chem. Engr., 46, 385 (1968).

(68) Merliss, F. E., Ph. D. Dissertation, Univ. of Oklahoma, Norman, Oklahoma (1967).

(69) Mills, R., J. Phys. Chem., 67, 600 (1963).

(70) Naghizadeh, J., and S. A. Rice, J. Chem. Phys., 36, 2710 (1962).

(71) Oholm, L. W., Medd. Vetenskapsadkad. Nobelinst., 2, 1 (1913).

(72) Olander, D. R., A. I. Ch. E. J., 7, 175 (1961).

(73) Olander, D. R., Ibid., 9, 207 (1963).

(74) Orye, R. V., and J. M. Prausnitz, Trans. Faraday Soc., 61, 1338 (1965).

(75) Othmer, D. F., and M. S. Thakar, Ind. Eng. Chem., 45, 589 (1953).

(76) Powell, R. E., W. E. Roseveare, and H. Eyring, Ind. Eng. Chem., 33, 430 (1941).

(77) Prausnitz, J. M., Molecular Thermodynamics of Fluid-Phase Equilibria, Prentice Hall, Inc., Englewood Cliffs, (1969).

(78) Prausnitz, J. M., C. A. Eckert, R. V. Orye, and J. P. O'Connell, Computer Calculations for Multicomponent Vapor-Liquid Equilibrium, Prentice Hall, Inc., Englewood Cliffs (1967).

(79) Prigogine, I., Thermodyanamique des Phenomenes Irreversibles, Dunod, Paris (1947).

(80) Prigogine, I., and R. Defay, Chemical Thermodynamics, Longman-Green and Co., London (1954).

(81) Rao, S. S., Ph. D. Dissertation, Univ. of Connecticut, Storrs, Conn. (1968).

(82) Rathbun, R. E., Ph. D. Dissertation, Univ. of Washington, Seattle, Washington (1965).

(83) Reddy, K. A., and L. K. Doraiswamy, Ind. Eng. Chem. Fund., 6, 77 (1967).

(84) Ree, F. H., T. Ree, and H. Eyring, Ind. Eng. Chem., 50, 1036 (1958).

(85) Ree, T. S., T. Ree, and H. Eyring, J. Phys. Chem., 68, 1163 (1964).

(86) Ree, S., T. Ree, and H. Eyring, Ibid., 68, 3232 (1964).

(87) Reid, R. C., and T. K. Sherwood, The Properties of Gases and Liquids, 2nd ed. McGraw-Hill, New York (1966).

(88) Rhodes, E., Ind. Eng. Chem. Fund., 5, 146 (1966).

(89) Rice, S. A., and A. R. Allnatt, J. Chem. Phys., 34, 409 (1961).

(90) Rice, S. A., and J. G. Kirkwood, J. Chem. Phys., 31, 901 (1958).

(91) Riley, J. F., and P. A. Lyons, J. Amer. Chem. Soc., 77, 261 (1954).

(92) Robinson, R. L., Ph. D. Dissertation, Oklahoma State University, Stillwater, Oklahoma, (1964).

(93) Robinson, R. L., W. C. Edmister, and F. A. L. Dullien, Ind. Eng. Chem. Fund., 5, 74 (1966).

(94) Rock, H., and L. Sieg, Z. Physik Chem., (Frankfurt), 3, 355 (1955).

(95) Scheibel, E. G., Ind. Eng. Chem., 46, 1007 (1954).

(96) Schneider, G., Z. Physik Chem. (Frankfurt), 24, 12 (1960).

(97) Schneider, G., Ibid., 27, 171 (1961).

(98) Skinner, R. D., Masters Thesis, Oklahoma State University Stillwater, Oklahoma, (1964).

(99) Stearn, A. E., E. M. Irish, and H. Eyring, J. Phys. Chem., 44, 981 (1940).

(100) Stefan, B., Wien. Ber., 79, 161 (1879).

(101) Stokes, G. G., Mathematical and Physical Papers, Cambridge Univ. Press, London, 3, 1 (1903).

(102) Stokes, R. H., Trans. Faraday Soc., 48, 887 (1952).

(103) Sutherland, W., Phil. Mag., 9, 981 (1905).

(104) Svensson, H., Acta Chem. Scand., 3, 1170 (1949).

(105) Thomaes, G., and J. van Itterbeek, Mol. Phys., 2, 372 (1959).

(106) Thoroughgood, J. A., Ph. D. Dissertation, University of Maryland, College Park, Maryland (1968).

(107) Thoroughgood, J. A., and R. B. Beckman, Paper presented at 65th National Meeting, A.I.Ch.E., Cleveland (May, 1969).

(108) Thovert, T., Compt. Rend., 138, 481 (1904).

(109) Thovert, T., Ann. de Phys., 2, 369 (1914).

(110) Trevoy, D. J., and J. Drickamer, J. Chem. Phys., 17, 1117 (1949).

(111) Trimble, L. E., Ph. D. Dissertation, University of Oklahoma, Norman, Oklahoma (1966).

(112) Trimble, L. E., D. Finn, and A. Cosgarea, Acta Metallurgica, 13, 501 (1965).

(113) Tyrell, H. J. V., Diffusion and Heat Flow in Liquids, Butterworth & Co., Ltd., London (1961).

(114) Vignes, A., Ind. Eng. Chem. Fund., 5, 189 (1966).

(115) Walden, P., Z. Electrochem., 12, 77 (1906).

(116) Weber, J. H., Ind. Eng. Chem., 47, 454 (1955).

(117) Wiedemann, D., Ann. Phys., 104, 170 (1858).

(118) Wilke, C. R., Chem. Eng. Prog., 45, 219 (1949).

(119) Wilke, C. R., and P. Chang, A. I. Ch. E. J., 1, 264 (1955).

(120) Wilson, G. M., J. Amer. Chem. Soc., 86, 127 (1964).

(121) Wirth, G. B., Ph. D. Dissertation, Michigan State University, East Lansing, Michigan (1968).

NOMENCLATURE

Upper Case

B	Parameter, Equation (21)
C	Concentration, moles/L^3
D	Diffusivity, L^2/t
$\overline{D}$	Intrinsic diffusivity, L^2/t
E	Activation energy
F	Partition function
J	Molar flux, moles/tL^2
K	Rate constant, Equation (23)
L	Latent heat of vaporization
M	Molecular weight, M/mole
N	Avogadro's number, $(\text{gm-mole})^{-1}$
P	Pressure, atm
R	Gas constant, ML^2/t^2T mole
T	Absolute temperature
U	Molecular velocity, L /t
V	Molar volume, L^3/mole
$\overline{V}$	Partial molar volume, L^3/mole
X	Liquid mole fraction, dim.

Y	Gas mole fraction, dim.
Z	Parameter, Equation (22)

Lower Case

a	Geometric length through diffusion cell, L
c	Parameters, Equation (61)
f	Parameter, Equation (54)
h	Planck's constant, ML^2/t
k	Boltzman's constant, ML^2/t^2T
m	Molecular mass, M
n	Refractive index, dim.
r	Radius, L
s	Parameter, Equation (50)
t	Time, t
x	Length, L
z	Optical path length, L

Greek Letters

α	Thermodynamic factor, dim.
β	Coefficient of sliding friction
γ	Activity, dim.
δ	Geometric configuration parameter
ζ	Viscous resistance per molecule
η	Viscosity, M/Lt
Θ	Per cent of association, dim.

λ	Equilibrium distance, L
μ	Chemical potential, ML^2/t^2
ξ	Friction coefficient
σ	Resistance coefficient
φ	Function of solvolysis number
ψ	Parameter, Equation (44)
ω	Parameter, Equation (53)

Subscripts

A, B, α, β	Components in binary
A0, A1	Initial conditions
D, $\alpha\beta$	Diffusion in mixture
f, $\alpha\beta$	Free volume
m	Mixture; maximum fringe separation
w	Water
η,α	Viscosity of pure component

Superscripts

V	Constant volume
'	Activated state
*	Self-diffusion condition
o	Infinite dilution condition

APPENDIX A

BOUNDARY FORMATION

The exact details of forming the interfacial boundary between the heavy and light test solutions are given in the following paragraphs. Reference should be made to Figure A-1 for a diagram of the valve arrangement.

After the cell was filled with the heavy solution and all valves were closed, the procedure was as follows:

(1) Valve 3, which controlled flow of the light solution into the top of the cell, was opened.

(2) Valve 4 was slowly opened and the heavy solution was withdrawn from the bottom of the cell at about twenty drops per minute. This volume of the heavy solution draining from the cell was replaced by the flow of an equal volume of light solution into the top of the cell. Thus, the two test solutions were brought into initial contact.

(3) The position of the interface between the solutions was observed visually as it moved downward. When the interface was approximately centered between the cell slits, fluid withdrawal from the bottom of the cell was stopped by closing valve 4.

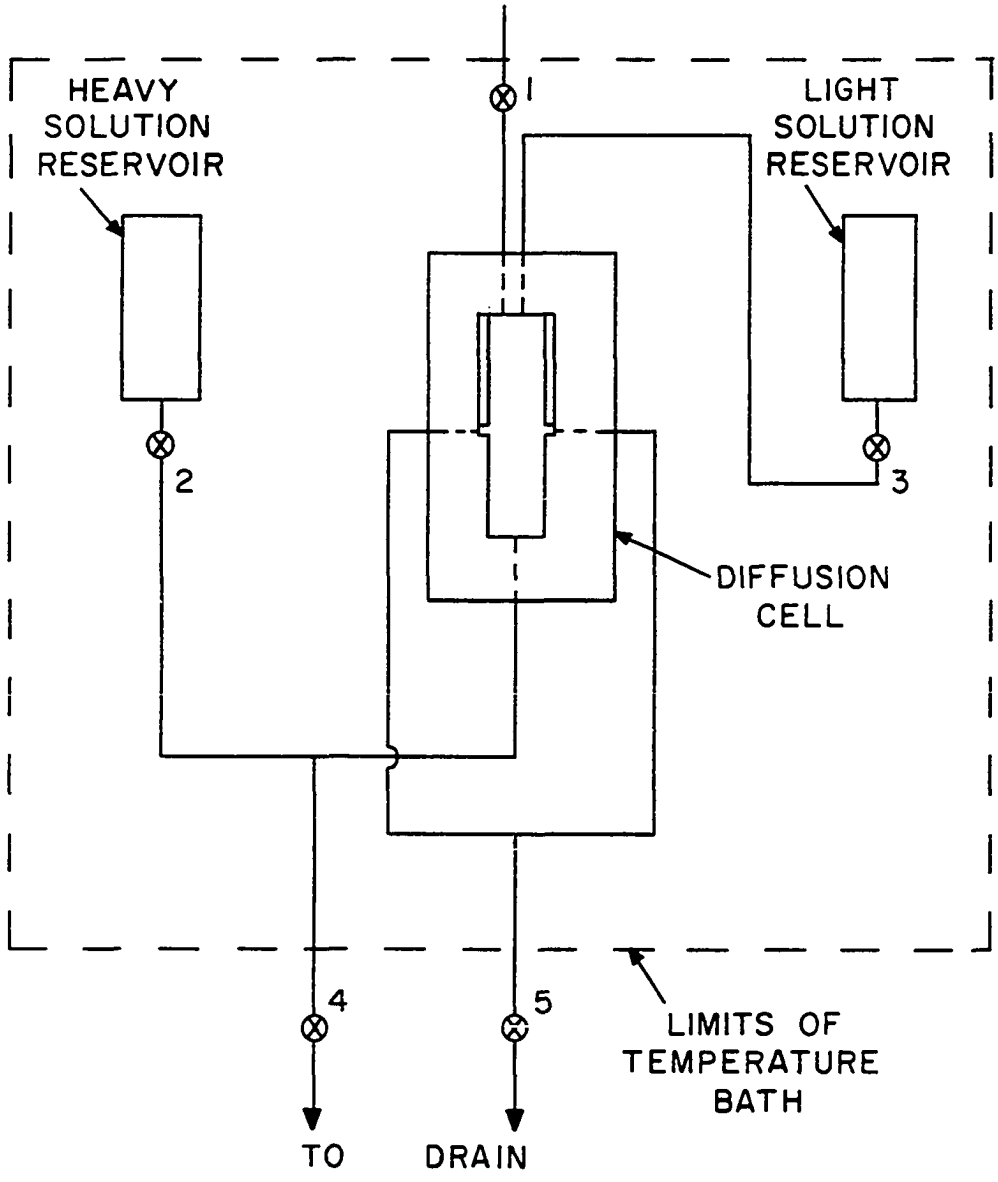

Figure A-1. Schematic Diagram of Cell Assembly

(4) Immediately afterward, the laser was switched on and the interfacial sharpening process was started. With valves 2 and 3 opened, the slit valve 5 was adjusted to give a withdrawal rate of about twenty drops per minute.

(5) By proper adjustment of the relative flow rates from the two reservoirs it was possible to stabilize the boundary centered between the cell slits. As the interface became more distinct, the withdrawal flow rate was steadily reduced to a minimum of about twelve drops per minute.

(6) When the interface was as sharp as could be obtained, valve 5 was closed and the electric timer was activated. Then valves 2 and 3 were closed to completely isolate the diffusing system.

APPENDIX B

DATA REDUCTION TECHNIQUE

From Chapter III, the final form of the infinite diffusion model which yields the desired regression relationship is

$$\varphi_i = (2x_i)^2 = 8D_{AB}(t_i + t_o)\left[1 + \ln\left(\frac{t_m + t_o}{t_i + t_o}\right)\right] \qquad \text{(B-1)}$$

Equation (B-1) contains three parameters, t_o, t_m, and D_{AB}, which must be determined. The model parameter, t_o, is a time correction which must be determined for each experiment in order that the sums, $(t_i + t_o)$, represent the actual time over which the diffusion process has occurred. The second parameter, t_m, is the recorded time at which the fringe separation distance, $2x_i$, is a maximum. The final variable, D_{AB}, is the binary diffusion coefficient. The problem is then one of determining values of t_o, t_m, and D_{AB} such that the sum of the squared residuals between the observed values and the model values is a minimum.

In an ideal case, the values predicted by the model equation should be identical to the observed values. This perfect agreement is not possible in practice because of

experimental errors and limitations of the model. Defining V_i as the difference between the measured values, G_i, and the predicted value, φ_i, the least squares criterion may be expressed as:

$$\sum_{i=1}^{h} V_i^2 = \text{Minimum} \tag{B-2}$$

where h is the number of data points.

The least squares procedure used to minimize the sum in Equation (B-2) is the Gauss-Newton method. The first step of this procedure is the linearization of the non-linear model equation by a Taylor series expansion truncated after the second term.

$$\varphi_i = \varphi_i\Big|_{\substack{t_o = t_o^o \\ t_m = t_m^o \\ D_{AB} = D_{AB}^o}} + \Delta t_o \left.\frac{\partial \varphi_i}{\partial t_o}\right|_{\substack{t_o = t_o^o \\ t_m = t_m^o \\ D_{AB} = D_{AB}^o}} + \Delta D_{AB} \left.\frac{\partial \varphi_i}{\partial D_{AB}}\right|_{\substack{t_o = t_o^o \\ t_m = t_m^o \\ D_{AB} = D_{AB}^o}}$$

$$+ \Delta t_m \left.\frac{\partial \varphi_i}{\partial t_m}\right|_{\substack{t_o = t_o^o \\ t_m = t_m^o \\ D_{AB} = D_{AB}^o}} . \tag{B-3}$$

Here the superscript zero indicates the assumed initial values of the parameters and

$$\begin{aligned} t_o &= t_o - t_o^o \\ D_{AB} &= D_{AB} - D_{AB}^o \\ t_m &= t_m - t_m^o \end{aligned} \tag{B-4}$$

In order to simplify the equation, let

$$\begin{aligned}
\eta_i &= G_i - \varphi_i \Big|_{t_o^o,\ D_{AB}^o,\ t_m^o} \\
\alpha_i &= \frac{\partial \alpha_i}{\partial t_o} \Big|_{t_o^o,\ D_{AB}^o,\ t_m^o} \\
\beta_i &= \frac{\partial \varphi_i}{\partial D_{AB}} \Big|_{t_o^o,\ D_{AB}^o,\ t_m^o} \\
\gamma_i &= \frac{\partial \varphi_i}{\partial t_m} \Big|_{t_o^o,\ D_{AB}^o,\ t_m^o}.
\end{aligned} \tag{B-5}$$

Then, Equation (B-2) becomes

$$\sum_{i=1}^{h} V_i^2 = \sum_{i=1}^{h} (G_i - \varphi_i)^2 = \sum_{i=1}^{h} (\eta_i - \alpha_i \Delta t_o - \beta_i \Delta D_{AB} - \gamma_i \Delta t_m)^2 \tag{B-6}$$

The minimum least squares criterion is:

$$\frac{\partial V_i^2}{\partial t^o} = 0, \quad \frac{\partial V_i^2}{\partial D_{AB}} = 0, \quad \frac{\partial V_i^2}{\partial t_m} = 0 \tag{B-7}$$

or

$$\sum_{i=1}^{h} V_i \alpha_i = 0, \quad \sum_{i=1}^{h} V_i \beta_i = 0, \quad \sum_{i=1}^{h} V_i \alpha_i = 0. \tag{B-8}$$

Substitution for the V_i in these equations and rearranging gives:

$$\begin{aligned}
\sum_{i=1}^{h} \alpha_i^2 \Delta t_o + \sum_{i=1}^{h} \alpha_i \beta_i \Delta D_{AB} + \sum_{i=1}^{h} \alpha_i \gamma_i \Delta t_m &= \sum_{i=1}^{h} \eta_i \alpha_i \\
\sum_{i=1}^{h} \alpha_i \beta_i \Delta t_o + \sum_{i=1}^{h} \beta_i^2 \Delta D_{AB} + \sum_{i=1}^{h} \beta_i \alpha_i \Delta t_m &= \sum_{i=1}^{h} \eta_i \beta_i \\
\sum_{i=1}^{h} \alpha_i \gamma_i \Delta t_o + \sum_{i=1}^{h} \beta_i \gamma_i \Delta D_{AB} + \sum_{i=1}^{h} \gamma_i^2 \Delta t_m &= \sum_{i=1}^{h} \eta_i \gamma_i.
\end{aligned} \tag{B-9}$$

Analytical differentiation of equation (B-1) with respect to the three parameters permitted evaluation of the values of the α_i, β_i, and γ_i:

$$\alpha_i = \frac{\partial \varphi_i}{\partial t_o} = 8D_{AB}\left[\ln\left(\frac{t_m + t_o}{t_i + t_o}\right) + \frac{t_i + t_o}{t_m + t_o}\right] \tag{B-10}$$

$$\beta_i = \frac{\partial \varphi_i}{\partial D_{AB}} = 8(t_i + t_o)\left[1 + \ln\left(\frac{t_m + t_o}{t_i + t_o}\right)\right] \tag{B-11}$$

$$\gamma_i = \frac{\partial \varphi_i}{\partial t_m} = 8D_{AB}\left(\frac{t_i + t_o}{t_m + t_o}\right) \tag{B-12}$$

Thus, the summation terms of the three linear simultaneous equations may be computed and solutions for the three parameter corrections, Δt_o, ΔD_{AB}, Δt_m, may be obtained. The corrections are then added to the original parameter estimates and the process is repeated until the least squares criterion is satisfied.

After final convergence of the least squares solution is achieved, the variances of the estimated parameters were calculated. At present there are several methods available for the computation of these quantities. The older and more widely utilized technique is the use of the first approximation of the law for the propagation of errors. In this method

$$\sigma_{ij}^2 = s^2 b_{ij} \tag{B-13}$$

where σ_{ij} are the variances or covariances of the parameters, the b_{ij} are the elements of the inverse of the coefficient matrix of the normal equation and $S^2 = \Sigma\eta_i^2/h\text{-}m$, where h and m are the number of data points and parameters, respectively.

Barieau and Dalton (5) and Box and Coutie (14) have presented methods for the calculation of variances and covariances to include non-linear parameters. However, where the degree of non-linearity of the parameters is not great, the results of these rigorous methods closely approximate those obtained from Equation (B-12). This conclusion was confirmed by Anand (2) and also by several comparisons made in the present work. Thus, Equation (B-13) was primarily used.

APPENDIX C

COMPUTER PROGRAM

A listing of the Fortran computer program for carrying out the data analysis operations described in the previous paragraphs is presented in Table C-1. To aid in following the operation, statements identifying the various sections of the program are included in the listing, and a simplified logic diagram is presented in Figure C-1.

The first step in data reduction involved a graphical analysis. A plot of the raw data ($2x_i$ versus t_i) permitted the estimation of approximate values of the parameters t_o and t_m. An example of such a plot is given in Figure C-2. With these values, an estimate of the diffusion coefficients was made using Equation (65). In this manner, the starting values of the parameters for the computers calculations were obtained. Thereafter, the parameter values were updated in the program after each iterative computation. This procedure was terminated when the fractional change of the sums of the squared deviations between two successive iterations was less

TABLE C1

```
C       GAUSS-NEWTON NONLINEAR LEAST SQUARES PROGRAM
C       FOR DATA REDUCTION
        DIMENSION DATA(36),TIME(36),THETA(36),DATX(36),DA(36)
        DIMENSION DR(36),ETA(36),AM(9),BM(3),LL(3),MM(3),CM(3),SID(9),
       1DCI(36)
        DIMENSION TITLE(80)
        N=2
        M=3
   69   READ(N,49)KSET
   49   FORMAT(I4)
        IF(KSET)51,50,51
   50   CONTINUE
C       READ INPUT INFORMATION AND CONVERT DATA
        READ(N,1)(TITLE(I),I=1,80)
    1   FORMAT(80A1)
        WRITE(M,2)(TITLE(I),I=1,80)
    2   FORMAT(' ',80A1)
        STORE=0.
        READ(N,619)NP,AO,BO,TI,FM
  619   FORMAT(I2,E16.8,3F10.5)
        DO 604 I=1,NP
  604   READ(N,605)DATX(I),TIME(I)
  605   FORMAT(2F10.5)
        DO 606 I=1,NP
  606   DATA(I)=DATX(I)*DATX(I)*2.54000*2.54000*FM*FM
C       BEGIN REGRESSION CALCULATION
        A=AO
        B=BO
        C=TI
        ITER=1
C       CALCULATE VALUES AND PARAMETER DERIVATIVES OF MODEL EQUATION
   10   DO 5 I=1,NP
```

TABLE C1, CONT'D.

```
      DC=A
      DELT=B
      DTI=C
      TERM=(DTI+DELT)/(TIME(I)+DELT)
      SLOG=ALOG(TERM)
      THETA(I)=8.*DC*(TIME(I)+DELT)*(1.+SLOG)
      ETA(I)=DATA(I)-THETA(I)
      DA(I)=-(TIME(I)+DELT)*(1.+SLOG)*8.
      DB(I)=8.*DC*(SLOG+1./TERM)
    5 DCI(I)=8.*DC*((TIME(I)+DELT)/(DTI+DELT))
C     FORM SUMS FOR NORMAL EQUATION
      SUMAE=0.
      SUMAA=0.
      SUMAB=0.
      SUMAG=0.
      SUMBE=0.
      SUMBB=0.
      SUMBG=0.
      SUMGE=0.
      SUMGG=0.
      SUMSQ=0.
      DO 7 I=1,NP
      SUMSQ=SUMSQ+ETA(I)*ETA(I)
      SUMAE=SUMAE+DA(I)*ETA(I)
      SUMBB=SUMBB+DB(I)*DB(I)
      SUMAA=SUMAA+DA(I)*DA(I)
      SUMAB=SUMAB+DA(I)*DB(I)
      SUMAG=SUMAG+DA(I)*DCI(I)
      SUMBE=SUMBE+DB(I)*ETA(I)
      SUMBG=SUMBG+DB(I)*DCI(I)
      SUMGE=SUMGE+ETA(I)*DCI(I)
    7 SUMGG=SUMGG+DCI(I)*DCI(I)
```

TABLE C1, CONT'D.

```
      AM(1)=SUMAA
      AM(2)=SUMAB
      AM(3)=SUMAG
      AM(4)=SUMAB
      AM(5)=SUMBB
      AM(6)=SUMBG
      AM(7)=SUMAG
      AM(8)=SUMBG
      AM(9)=SUMGG
      BM(1)=SUMAE
      BM(2)=SUMBE
      BM(3)=SUMGE
C     CALL NORMAL EQUATION MATRIX INVERSION SUBPROGRAM
      CALL MINV(AM,3,DET,LL,MM)
      CALL GMPRD(AM,BM,CM,3,3,1)
      DELA=CM(1)
      DELB=CM(2)
      DELC=CM(3)
      DELI=ABS((STORE-SUMSQ)/SUMSQ)
      STORE=SUMSQ
C     CHECK FOR CONVERGENCE
      IF(DELI-0.0001)999,999,110
  110 IF(ITER-10)113,113,999
  113 A=DELA+A
      B=DELB+B
      C=DELC+C
      ITER=ITER+1
      GO TO 10
C     CALCULATE STATISTICS
  999 NPM2=NP-2
      DNP=NPM2
      FAC=SUMSQ/DNP
```

TABLE C1, CONT'D.

```
      SXY=SQRT(FAC)
      DO 13 I=1,9,4
   13 STD(I)=SQRT(AM(I)*FAC)
C     PRINT OUTPUT
      WRITE(M,201)
  201 FORMAT(1HC,7X,7HEXPMTAL,16X,5HCALCD,13X,10HDIFFERENCE,14X,4HTIME)
      WRITE(M,71)
   71 FORMAT(3X,4('****************',5X))
      DO 204 I=1,NP
  204 WRITE(M,202)DATA(I),THETA(I),ETA(I),TIME(I)
  202 FORMAT(0
  202 FORMAT(3X,E16.8,5X,E16.8,5X,E16.8,5X,F10.2)
      WRITE(M,336)ITER
  336 FORMAT(9X,12HITERATION = ,I3,///)
      WRITE(M,206)
  206 FORMAT(3X,21HDIFFUSION COEFFICIENT,5X,9HZERO TIME,5X,11HSUM SQUARE
     2S,5X,9HSTD ERROR,19X,2HTI,///)
      WRITE(M,9)A,B,SUMSQ,SXY,C
    9 FORMAT(3X,E16.8,8X,F10.2,5X,E16.8,5X,E16.8,5X,F10.3)
      WRITE(M,207)
  207 FORMAT(5X,14HSTD ERROR OF D,5X,15HSTD ERROR OF TO,5X,15HSTD ERRROR
     3OF TI,///)
      WRITE(M,208)STD(1),STD(5),STD(9)
  208 FORMAT(3(5X,E16.8))
      GO TO 69
   51 CALL EXIT
      END
```

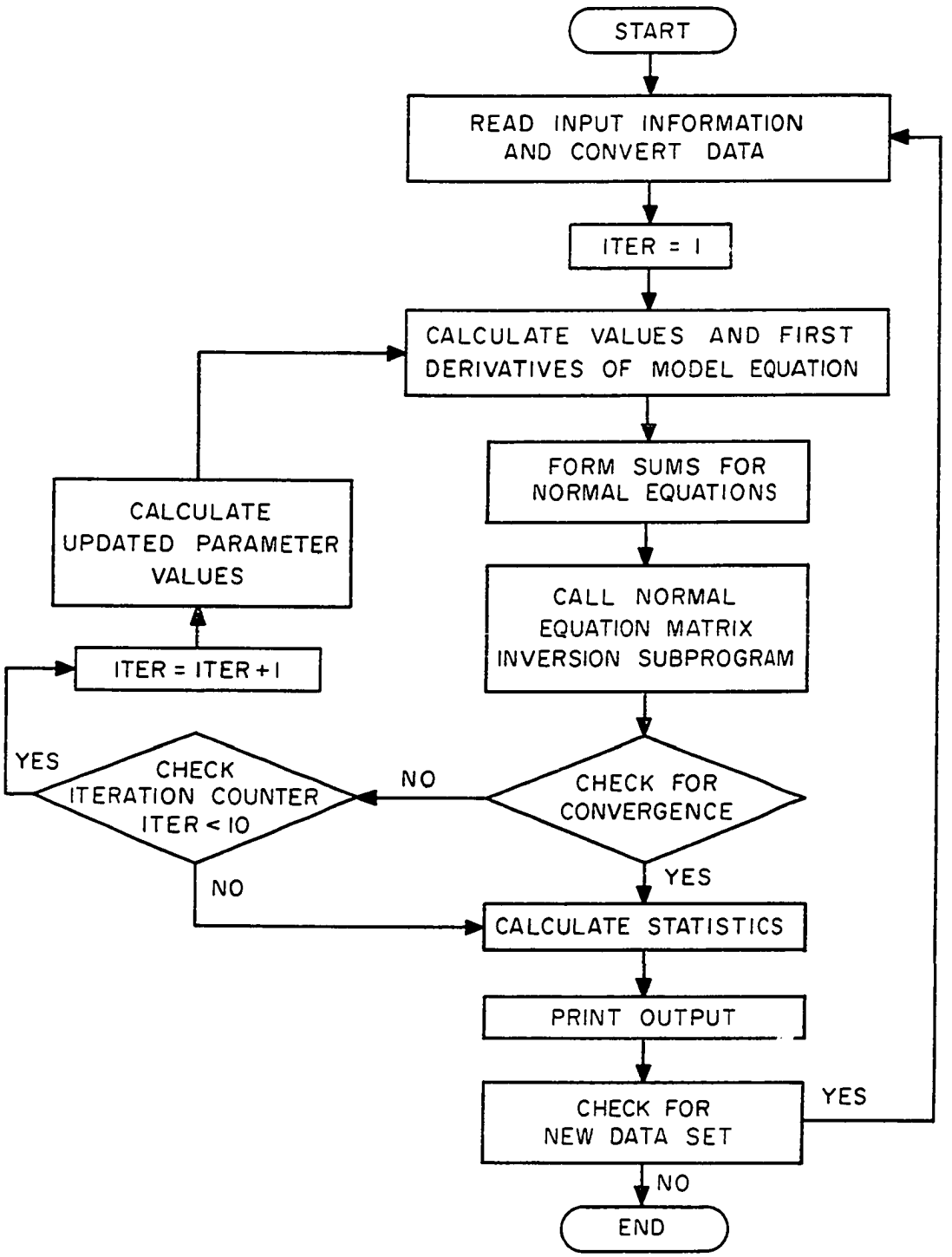

Figure C-1. Logic Diagram for the Data Reduction Program

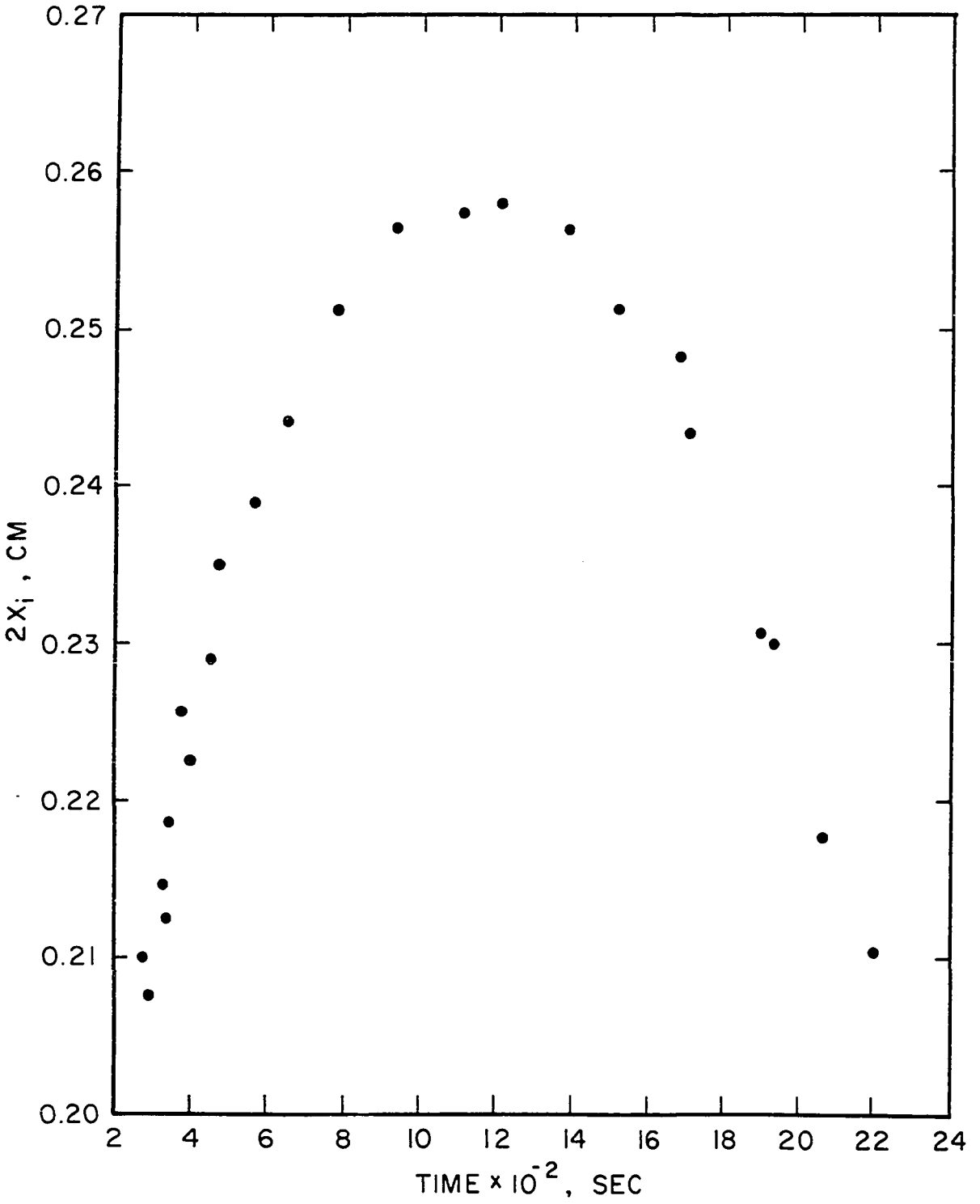

Figure C-2. Example of Raw Data Plot

than 0.001. Convergence of the calculational scheme was excellent as this criterion was generally achievable in fewer than eight iterations.

APPENDIX D

DETERMINATION OF ACTIVITY GRADIENTS FROM THERMODYNAMIC DATA

The application of Equation (98) as well as most other expressions for predicting the concentration dependence of molecular diffusion coefficients requires values of the activity gradient term, $\frac{d\ln a}{d\ln X}$, which is usually referred to as the thermodynamic factor. For purposes of evaluating these factors, a solution model equation proposed by Wilson (120) was used. This equation for the excess free energy, g^E, has the form

$$\frac{g^E}{RT} = - \sum_{i=1}^{n} X_i \ln \sum_{j=1}^{n} \Lambda_{ij} X_j \qquad \text{(D-1)}$$

where

$$\Lambda_{ij} = \frac{V_j}{V_i} \exp \frac{-(\lambda_{ij} - \lambda_{ii})}{RT} . \qquad \text{(D-2)}$$

In Equation (D-2), V_i and V_j are the pure component liquid molar volumes and $(\lambda_{ij} - \lambda_{ii})$ is an empirically determined energy term between an i-j pair and an i-i pair. For a binary mixture, two of these energy terms are required. These are referred to as Wilson parameters.

The resulting equations for the two activity coefficients are

$$\ln\gamma_1 = -\ln(X_1 + \Lambda_{12}X_2) + X_2 \left[\frac{\Lambda_{12}}{X_1 + \Lambda_{12}X_2} - \frac{\Lambda_{21}}{\Lambda_{21}X_1 + X_2} \right] \quad \text{(D-3)}$$

$$\ln\gamma_2 = -\ln(X_2 + \Lambda_{21}X_1) - X_1 \left[\frac{\Lambda_{12}}{X_1 + \Lambda_{12}X_2} - \frac{\Lambda_{21}}{\Lambda_{21}X_1 + X_2} \right] \quad \text{(D-4)}$$

For a binary the two values of the activity gradient at a particular mole fraction are equal as required by the Gibbs-Duhem equation. Thus,

$$\frac{d\ln a}{d\ln X} = \left(1 + \frac{d\ln\gamma_1}{d\ln X_1} \right) = \left(1 + \frac{d\ln\gamma_2}{d\ln X_2} \right) \quad \text{(D-5)}$$

and the thermodynamic factor may be evaluated from the analytical differentiation of either Equation (D-3) or (D-4) with the same result. Arbitrarily choosing Equation (D-3) and differentiating gives

$$\frac{d\ln\gamma_1}{d\ln X_1} = \frac{-X_1(1 - \Lambda_{12})}{X_1 + \Lambda_{12}X_2} - \frac{X_1\Lambda_{12}}{(X_1 + \Lambda_{12}X_2)^2} + \frac{X_1\Lambda_{21}^2}{(X_1\Lambda_{21} + X_2)^2} \quad \text{(D-6)}$$

For the binary systems of this study, the Wilson parameters were obtained from a non-linear fit of Equation (D-6) to excess free energy values given in the literature. For a

complete discussion of the methods for determining the Wilson parameters from more basic vapor-liquid equilibrium data, the reader is referred to a book by Prausnitz, Eckert, Orye, and O'Connell (78).

There are several aspects of the Wilson equation which make it highly advantageous for use in the evaluation of thermodynamic data. First, the equation, which contains only two adjustable parameters, is sufficiently flexible to reproduce liquid phase activity coefficients for practically any pair of miscible liquid pairs. This statement is supported by Prausnitz, et al. (78) who calculated Wilson parameters for over one hundred binary systems for which reliable data existed. The Wilson equation yielded results that were as good and, in most cases, better than previous solution models. More recently, the superiority of the Wilson equation was reaffirmed by Holmes and Van Winkle (54). These investigators compared results obtained with the Wilson equation to those of the third order Margules equation, the VanLaar equation, and Bonham equation for eighty-nine binary systems.

A second advantage of the Wilson equation is that it has a built-in temperature dependence which has approximate theoretical significance (77, 78). The two parameters $(\lambda_{ij} - \lambda_{ii})$ and $(\lambda_{ij} - \lambda_{jj})$ may be considered temperature independent over

modest temperature intervals. This invariance of the parameters with temperature is useful in that activity values may be calculated at temperatures for which there is no thermodynamic data.

However, the real advantage of using this method becomes apparent when one considers that an explicit form for the activity gradient term is obtained. Consequently, values of these terms may be determined analytically without resorting to tedious and often inaccurate graphical differentiation of activity data. Also, this method minimizes errors present in the vapor-liquid equilibrium data used.

The ideal situation is to have isothermal vapor-liquid equilibrium data at each temperature at which diffusion coefficients were obtained. However, data was not always available at these temperatures. For this case, the Wilson parameters were used to interpolate or extrapolate available data. In this procedure, Wilson parameters were calculated for at least three sets of isothermal data. These parameters were then plotted as a function of temperature. The temperature dependence of these parameters, however slight, was thus obtained and taken into account in the calculation of values for the parameters at desired temperatures. The Wilson parameters determined for systems of this work are listed in Table D-1.

The use of the Wilson equation provided an excellent means for evaluating thermodynamic factors at each temperature of interest for the complete mole fraction range.

TABLE D-1

WILSON PARAMETERS

SYSTEM	TEMP. °C	$\lambda_{12} - \lambda_{11}$ cal/g.mol.	$\lambda_{12} - \lambda_{22}$ cal/g.mol.
Toluene (1)	25	149.9	75.1
Methylcyclohexane (2)	45	145.0	70.5
	60	152.9	65.8
Toluene (1)	25	575.0	778.8
Aniline (2)	45	436.0	654.8
	60	338.9	584.2
Methylcyclohexane (1)	60	854.	1280.
Aniline (2)			

APPENDIX E

VISCOSITY, DENSITY, AND

REFRACTIVE INDEX MEASUREMENTS

TABLE E-1

DENSITIES AND VISCOSITIES OF

TOLUENE-METHYLCYCLOHEXANE MIXTURES AT 25° C

Mole Fraction Toluene	Density gm./ml.	Viscosity cp.
0.000	0.8603	0.5545
0.219	0.8398	0.5445
0.456	0.8144	0.5589
0.715	0.7914	0.5863
1.000	0.7670	0.6544

TABLE E-2

DENSITIES AND VISCOSITIES OF

TOLUENE-METHYLCYCLOHEXANE MIXTURES AT 45° C

Mole Fraction Toluene	Density gm./ml.	Viscosity cp.
0.000	0.8445	0.4441
0.219	0.8197	0.4356
0.456	0.7942	0.4390
0.714	0.7744	0.4620
1.000	0.7491	0.5187

TABLE E-3

DENSITIES AND VISCOSITIES OF

TOLUENE-METHYLCYCLOHEXANE MIXTURES AT 60° C

Mole Fraction Toluene	Density gm./ml.	Viscosity cp.
0.000	0.7531	0.4336
0.287	0.7744	0.4620
0.547	0.7804	0.3817
0.782	0.8078	0.3666
1.000	0.8365	0.3948

TABLE E-4

DENSITIES AND VISCOSITIES OF

TOLUENE-ANILINE MIXTURES AT 25° C

Mole Fraction Toluene	Density gm./ml.	Viscosity cp.
0.000	1.0175	3.700
0.112	1.001	2.738
0.223	0.9805	2.021
0.301	0.9708	1.532
0.462	0.9427	1.218
0.615	0.9005	0.7857
0.677	0.9004	0.7114
0.740	0.8910	0.7401
0.881	0.8750	0.5609
1.000	0.8603	0.5545

TABLE E-5

DENSITIES AND VISCOSITIES OF

TOLUENE-ANILINE MIXTURES AT 45° C

Mole Fraction Toluene	Density gm./ml.	Viscosity cp.
0.000	1.005	2.069
0.112	0.9885	1.723
0.223	0.9662	1.287
0.301	0.9545	1.150
0.462	0.9262	0.866
0.615	0.8919	0.6018
0.677	0.8830	0.4472
0.792	0.8754	0.4469
0.881	0.8571	0.4468
1.000	0.8445	0.4441

TABLE E-6

DENSITIES AND VISCOSITIES OF

TOLUENE-ANILINE MIXTURES AT 60° C

Mole Fraction Toluene	Density gm./ml.	Viscosity cp.
0.000	0.9927	1.456
0.112	0.9766	1.265
0.223	0.9567	0.9834
0.301	0.9444	0.9261
0.462	0.9147	0.6917
0.615	0.8752	0.4960
0.677	0.8670	0.4641
0.792	0.8647	0.4629
0.881	0.8464	0.3971
1.000	0.8365	0.3948

TABLE E-7

DENSITIES AND VISCOSITIES OF

METHYLCYCLOHEXANE-ANILINE AT 60° C

Mole Fraction Methylcyclohexane	Density gm./ml.	Viscosity cp.
0.000	0.9927	1.510
0.192	0.9269	1.153
0.420	0.8517	0.8340
0.684	0.7986	0.5088
1.000	0.7531	0.4436

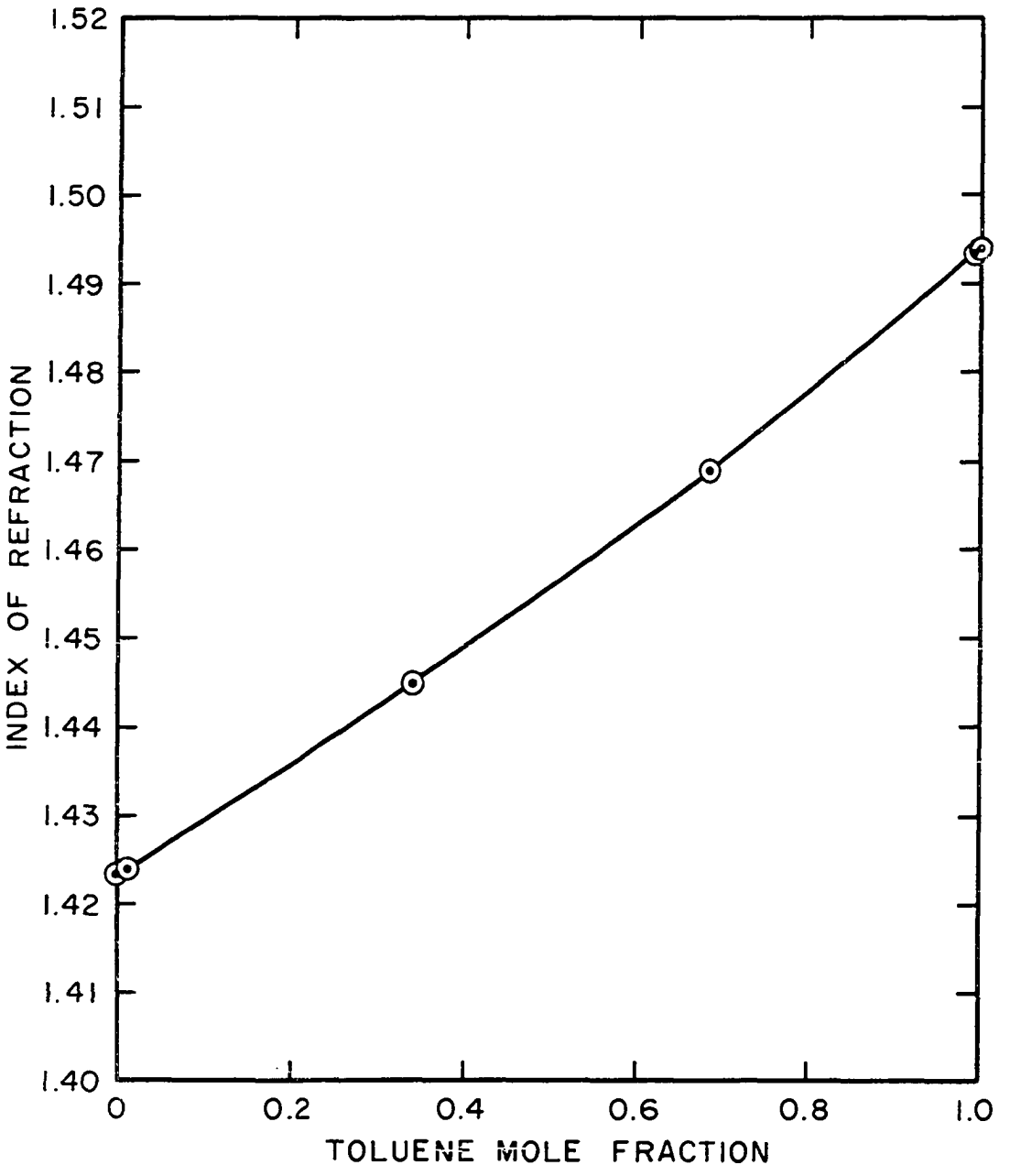

Figure E-1. Refractivity of Toluene-Methylcyclohexane Solution at 25° C

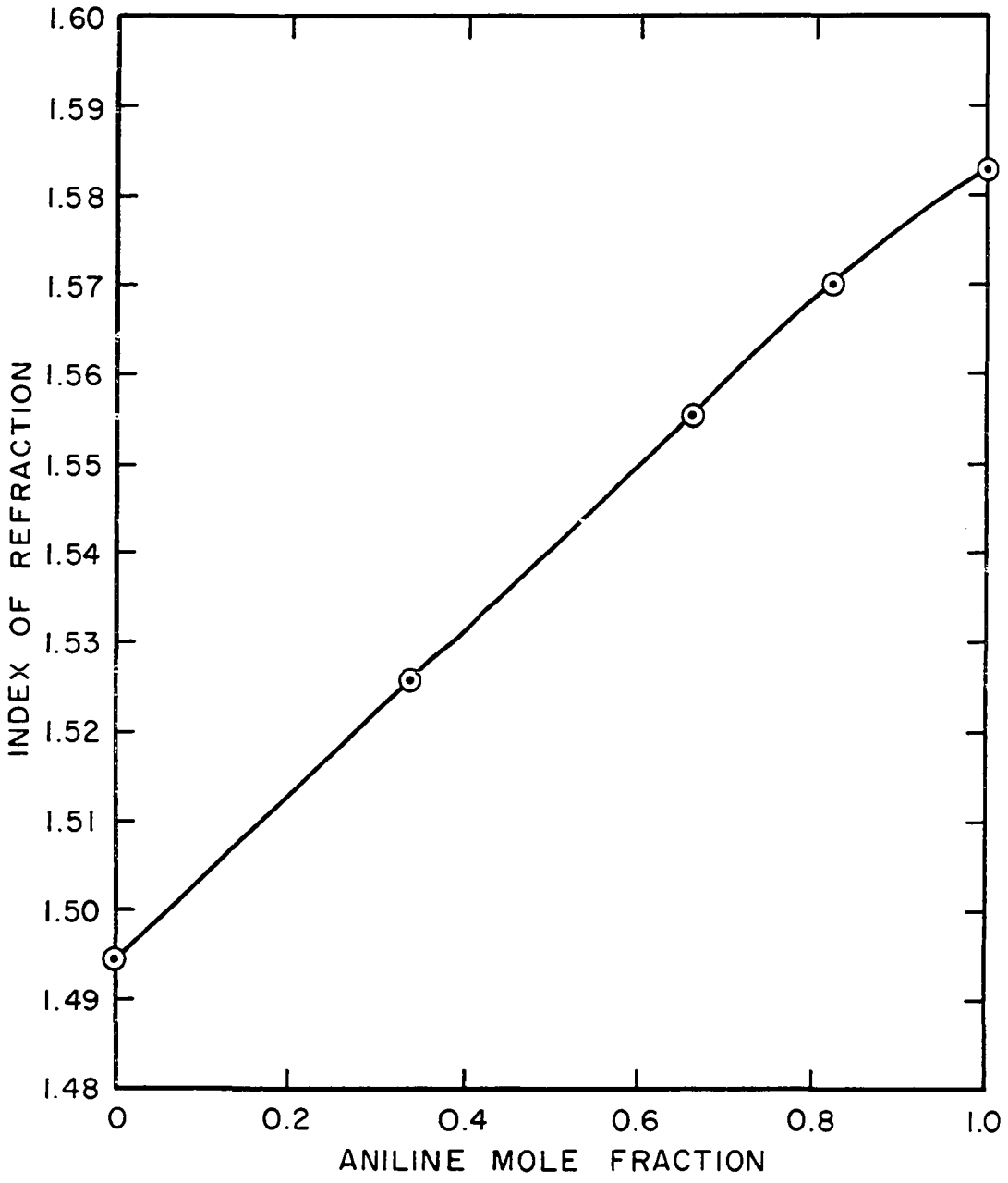

Figure E-2. Refractivity of Toluene-Aniline Solution at 25° C

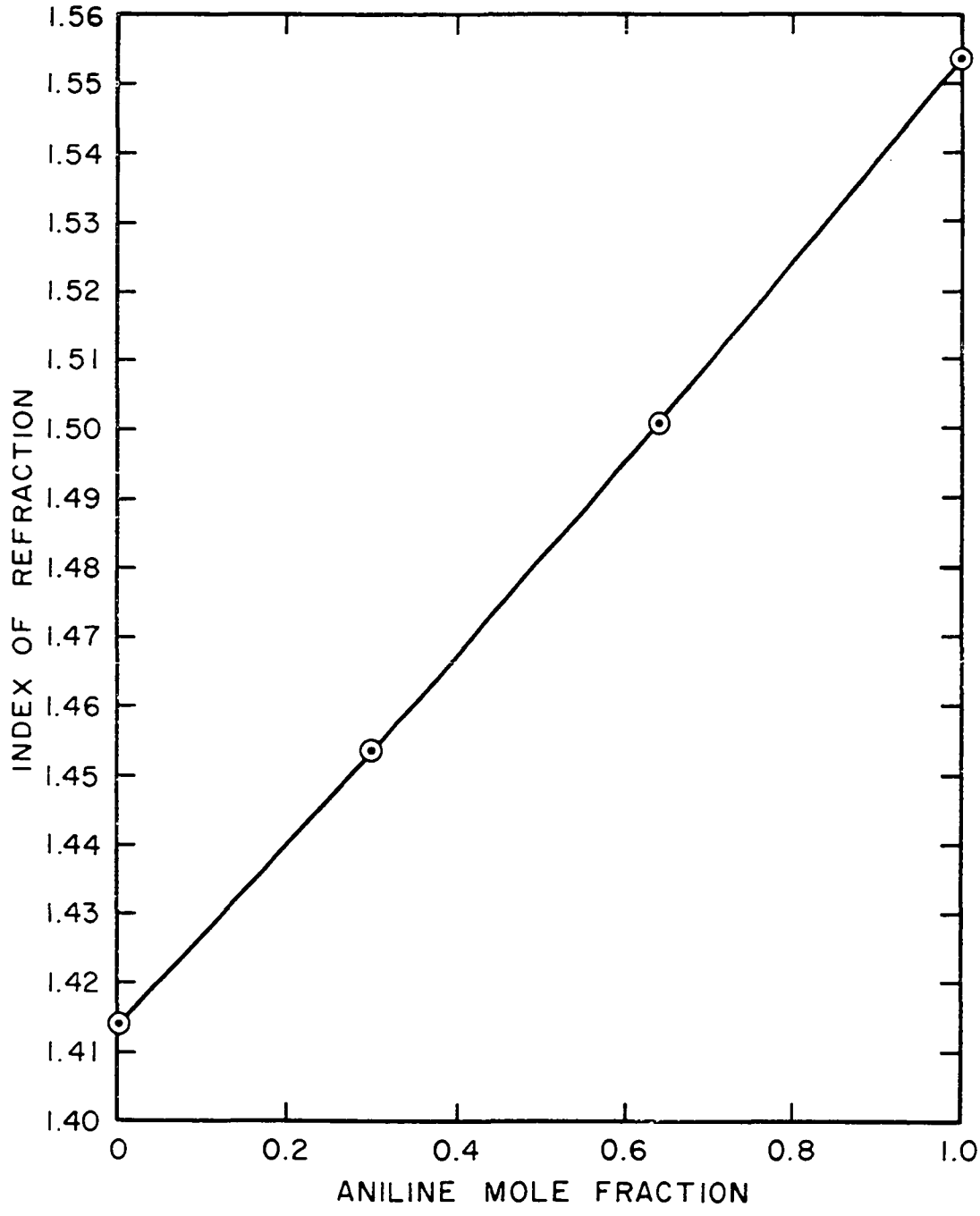

Figure E-3. Refractivity of Methylcyclohexane-Aniline Solution at 60° C

APPENDIX F

COMPARISONS OF PREDICTIVE EQUATIONS WITH EXPERIMENTAL DATA

TABLE F-1

COMPARISON OF EXPERIMENTAL INFINITE DILUTION

DIFFUSION COEFFICIENTS TO PREDICTED VALUES

SYSTEM	TEMP.	$D^{o}_{AB} \times 10^{5}$, sp.cm./sec.				
	°C	Experi-mental	Wilke-Chang	Othmer-Thakar	Lusis-Radcliff	Reddy-Doraiswamy
Toluene (A)	25	1.65	1.64	1.47	1.98	1.53
Methylcyclohexane (B)	45	2.18	2.26	2.84	2.71	2.08
	60	2.73	2.81	4.29	3.36	2.57
Methylcyclohexane (A)	25	2.21	1.97	1.75	2.08	1.84
Toluene (B)	45	3.09	2.63	3.30	2.77	2.43
	60	3.66	3.20	4.77	3.33	2.92

TABLE F-2

COMPARISON OF EXPERIMENTAL INFINITE DILUTION

DIFFUSION COEFFICIENTS WITH PREDICTED VALUES

SYSTEM	TEMP.	$D^{o}_{AB} \times 10^{5}$, sq.cm./sec.				
	°C	Experimental	Wilke-Chang	Othmer-Thakar	Lusis-Radcliff	Reddy-Doraiswamy
Toluene (A)	25	0.478	0.328	0.271	0.333	0.309
Aniline (B)	45	0.880	0.611	0.711	0.617	0.567
	60	1.27	0.901	1.26	0.905	0.823
Aniline (A)	25	2.10	3.10	1.56	2.57	2.07
Toluene (B)	45	2.78	4.14	2.86	3.39	2.71
	60	3.60	5.03	4.15	4.07	3.25

TABLE F-3

COMPARISON OF EXPERIMENTAL INFINITE DILUTION DIFFUSION COEFFICIENTS WITH PREDICTED VALUES

SYSTEM	TEMP.	$D^{o}_{AB} \times 10^{5}$, sq.cm./sec.				
	°C	Experimental	Wilke-Chang	Othmer-Thakar	Lusis-Radcliff	Reddy-Doraiswamy
Methylcyclohexane (A)	60	0.865	0.810	1.20	0.811	0.774
Aniline (B)						
Aniline (A)						
Methylcyclohexane (B)	60	2.70	3.98	3.54	3.67	2.69

TABLE F-4

COMPARISON OF DIFFUSION DATA

WITH CONCENTRATION CORRELATIONS

System: A - Toluene B - Methylcyclohexane

Average Mole Fraction (A)	$D_{AB} \times 10^5$, sq.cm./sec. Experimental	Equation (98)	Vignes-Cullinan
	Temperature 25° C		
0.3477	1.61	1.59	1.52
0.6813	1.74	1.76	1.74
	Temperature 45° C		
0.3477	2.16	2.21	2.10
0.6813	2.40	2.47	2.43
	Temperature 60° C		
0.3477	2.63	2.73	2.58
0.6813	2.94	3.06	2.91
Average Absolute Error (per cent)		2.57	2.13

TABLE F-5

COMPARISON OF DIFFUSION DATA

WITH CONCENTRATION CORRELATIONS

System: A - Toluene
B - Aniline

Temperature: 25° C

Average Mole Fraction (A)	$D_{AB} \times 10^5$, sq.cm./sec. Experimental	Equation (99)	Vignes-Cullinan
0.1548	1.04	1.08	0.89
0.3394	0.568	0.575	0.412
0.5042	0.296	0.293	0.234
0.6710	0.279	0.268	0.231
0.8483	0.366	0.350	0.314
Average Absolute Error (per cent)		2.81	18.9

TABLE F-6

COMPARISON OF DIFFUSION DATA

WITH CONCENTRATION CORRELATIONS

System: A - Toluene
B - Aniline

Temperature: 45° C

Average Mole Fraction (A)	$D_{AB} \times 10^5$, sq.cm./sec. Experimental	Equation (99)	Vignes-Cullinan
0.1548	0.758	0.704	0.650
0.3394	0.588	0.601	0.512
0.5042	0.605	0.656	0.548
0.6710	0.889	0.961	0.741
0.8483	1.63	1.69	1.46
Average Absolute Error (per cent)		5.80	12.7

TABLE F-7

COMPARISON OF DIFFUSION DATA

WITH CONCENTRATION CORRELATIONS

System: A - Toluene
B - Aniline

Temperature: 60° C

Average Mole Fraction (A)	$D_{AB} \times 10^5$, sq.cm./sec. Experimental	Equation (99)	Vignes-Cullinan
0.1548	1.13	1.10	1.03
0.3394	0.997	0.963	0.901
0.5042	1.09	1.12	0.949
0.6710	1.57	1.48	1.21
0.8483	2.48	2.41	2.01
Average Absolute Error (per cent)		3.42	14.5

TABLE F-8

COMPARISON OF DIFFUSION DATA

WITH CONCENTRATION CORRELATIONS

System: A - Methylcyclohexane
B - Aniline

Temperature: 60° C

Average Mole Fraction (A)	D_{AB} X 10^5, sq.cm./sec. Experimental	Equation (99)	Vignes-Cullinan
0.2415	0.388	0.275	0.240
0.4904	0.363	0.240	0.19
0.7755	1.02	0.68	0.54
Average Absolute Error (per cent)		32.1	44.3

TABLE F-9

COMPARISON OF DIFFUSION DATA

WITH CONCENTRATION CORRELATIONS

System*: A - Benzene
B - Carbon Tetrachloride

Temperature: 25° C

Average Mole Fraction (A)	D_{AB} X 10^5, sq.cm./sec.		
	Experimental	Equation (99)	Vignes-Cullinan
0.0036	1.95	1.94	1.94
0.2344	1.76	1.71	1.74
0.5064	1.45	1.55	1.59
0.7452	1.44	1.46	1.50
0.9850	1.45	1.45	1.45
Average Absolute Error (per cent)		2.28	3.11

*Data of Wirth (121)

TABLE F-10

COMPARISON OF DIFFUSION DATA

WITH CONCENTRATION CORRELATIONS

System*: A - Chloroform
B - Carbon Tetrachloride

Temperature: 25° C

Average Mole Fraction (A)	$D_{AB} \times 10^5$, sq.cm./sec. Experimental	Equation (99)	Vignes-Cullinan
0.0340	1.97	2.08	2.04
0.0580	1.88	2.04	2.00
0.1745	1.80	1.83	1.76
0.2611	1.75	1.69	1.63
0.5689	1.64	1.55	1.45
0.9735	1.51	1.49	1.48
Average Absolute Error (per cent)		4.29	5.34

*Data of Wirth (121)

TABLE F-11

COMPARISON OF DIFFUSION DATA

WITH CONCENTRATION CORRELATIONS

System*: A - Aniline
B - Benzene

Temperature: 25° C

Average Mole Fraction (A)	$D_{AB} \times 10^5$, sq.cm./sec. Experimental	Equation (99)	Vignes-Cullinan
0.1569	0.53	0.77	0.67
0.2056	0.56	0.75	0.68
0.4071	0.60	0.74	0.66
0.5489	0.66	0.72	0.66
0.6590	0.67	0.77	0.746
0.7552	0.82	0.92	0.92
0.8297	1.09	1.11	1.14
0.8543	1.22	1.19	1.23
0.9055	1.41	1.40	1.45
0.9640	1.76	1.69	1.75
Average Absolute Error (per cent)		14.0	8.92

*Data of Rao (81)

TABLE F-12

COMPARISON OF DIFFUSION DATA

WITH CONCENTRATION CORRELATIONS

System*: A - Aniline
B - Carbon Tetrachloride

Temperature: 25° C

Average Mole Fraction (A)	$D_{AB} \times 10^5$, sq.cm./sec.		
	Experimental	Equation (99)	Vignes-Cullinan
0.1268	0.46	0.489	0.458
0.2344	0.42	0.458	0.417
0.3893	0.39	0.405	0.356
0.5541	0.35	0.325	0.291
0.6443	0.37	0.307	0.285
0.7465	0.43	0.366	0.355
0.8272	0.57	0.526	0.520
0.8622	0.75	0.656	0.650
0.9001	0.86	0.832	0.828
0.9622	1.37	1.30	1.25
Average Absolute Error (per cent)		8.30	11.2

*Data of Rao (81)