71-27,604

CLIFTON, Danny Morris, 1945-
ON THE INTERACTING AND NONINTERACTING CONTROL OF MULTIVARIABLE STOCHASTIC SYSTEMS USING FEEDFORWARD-FEEDBACK CONTROLLERS.

The University of Oklahoma, Ph.D., 1971
Engineering, chemical

University Microfilms, A XEROX Company, Ann Arbor, Michigan

THIS DISSERTATION HAS BEEN MICROFILMED EXACTLY AS RECEIVED

Downloaded from SHAREOK. Persistent Handle URL: https://hdl.handle.net/11244/3040

THE UNIVERSITY OF OKLAHOMA

GRADUATE COLLEGE

ON THE INTERACTING AND NONINTERACTING CONTROL OF MULTIVARIABLE STOCHASTIC SYSTEMS USING FEEDFORWARD-FEEDBACK CONTROLLERS

A DISSERTATION

SUBMITTED TO THE GRADUATE FACULTY

in partial fulfillment of the requirements for the degree of

DOCTOR OF PHILOSOPHY

BY

DANNY MORRIS CLIFTON

Norman, Oklahoma

1970

ON THE INTERACTING AND NONINTERACTING CONTROL OF

MULTIVARIABLE STOCHASTIC SYSTEMS USING

FEEDFORWARD-FEEDBACK CONTROLLERS

APPROVED BY

Michael L. McGuire

C M Shepcevich

K. E. Starling

Paul J. Rook

James A. Payne

DISSERTATION COMMITTEE

PLEASE NOTE:

Some pages have indistinct print. Filmed as received.

UNIVERSITY MICROFILMS.

ACKNOWLEDGEMENT

I wish to express my gratitude first to my friend and advisor, Mike McGuire, for his help and guidance throughout my graduate years.

Thanks go also to my compatriots Bill Woodard, Ken Sanders, and Dave Clements and to my predecessor in multivariable control research, Harry West, for their time and efforts. Appreciation is also extended to Stan Buchner for special consideration in the application of the calcomp plotter.

I would like to thank Phillips Petroleum Company, the National Science Foundation, and the National Defense Education Act for the financial support which made my work possible.

I have my parents to thank for the encouragement and inspiration that prompted me to enter and complete graduate school.

Finally, I want to thank my wife, Shirley Ann, for her patience and understanding and for her diligent efforts in the preparation of this manuscript.

ABSTRACT

The regulation of continuous, multivariable systems subjected to stochastic load disturbances is investigated. The study demonstrates the superiority of a newly-developed interacting control scheme over a conventional method of noninteracting control. Necessary multivariable computational techniques are introduced for application of the interacting control technique to multiple-disturbance systems. The investigation extends the concept of evaluating control performance in terms of mean-squared output error and control effort to the case of the control of multivariable systems. The effectiveness of the measures thus developed is illustrated in the determination of the relative performance of the control configurations as applied to a chemical reactor attempting operation at an unstable point. The control systems are subjected to such hazards as measurement noise, tight control-saturation constraints, and time delays. The investigation is thus able to verify the hypothesis of some authors that interacting control will in general provide better output regulation for complex multivariable systems than control of the corresponding decoupled multivariable system.

The particular configurations considered achieve control by the application of feedforward and feedback compensators to the nonlinear system model. Interacting control is obtained by composite controllers developed by the use of the continuous, partial differential equation form of Bellman's dynamic programming algorithm applied to the linearized form of the system. Noninteracting control is derived by the use of conventional controllers applied to the uncoupled form of the system with dynamic uncoupling being achieved by internal feedback elimination methods. Finally, benefits and limitations encountered in the various steps of the implementation of the two control configurations are discussed. The chemical reactor controlled was simulated by the use of the System/360 Continuous System Modeling Program.

TABLE OF CONTENTS

Page

LIST OF TABLES ix

LIST OF ILLUSTRATIONS x

Chapter

I. INTRODUCTION 1

Introduction 1

Statement of the General Problem 3

Literature Review 7

II. MATHEMATICAL BACKGROUND 10

Concepts from the Theory of Random Processes 10

Dynamic Programming 14

III. MULTIVARIABLE CONTROL CONCEPTS 18

Multivariable Systems 18

Interaction and Noninteraction 24

Degree of System Interaction 30

Multivariable System Stability 31

Control System Performance 32

IV. MULTIVARIABLE SYSTEM SIMULATIONS 38

Continuous-Flow Stirred-Tank Reactor 40

Implementation of Noninteracting Control Scheme 48

Page

Digital Simulation of Control System Configurations 57

Disturbance Inputs 58

Uncontrolled System Stability 59

The Roles of Q and Q_C in the Control System 64

Mean Deviation Time Dependence 67

Control System Performance 72

Mean Deviations as Functions of Penalty Factor Ratio 80

Control Performance for Normal Weighting Factors 85

A Space of Admissible Penalties 89

Control Signal Saturation 94

Effect of Output Measurement Noise on Control Performance 111

The Relative Effect of Time Delays on on Control Performance 118

V. MULTIVARIABLE CONTROL SYSTEMS 129

Multivariable Control Systems Synthesis . 129

Interacting versus Noninteracting Control 133

VI. CONCLUSIONS AND RECOMMENDATIONS 140

BIBLIOGRAPHY 143

APPENDICES

Appendix		Page
A.	DYNAMIC PROGRAMMING INTERACTING CONTROL	153
B.	NONINTERACTING CONTROL BY INTERNAL FEEDBACK ELIMINATION	160
C.	CALCULATION OF THE FEEDFORWARD CONTROL PARAMETER	170
D.	GAUSSIAN NOISE DIGITAL SIMULATION	174

FORTRAN PROGRAM LISTINGS

I.	OPTIMAL COMPOSITE CONTROLLER CALCULATIONAL PROGRAM	180
II.	INTERACTING CONTROL SYSTEM PROGRAM	180
III.	NONINTERACTING CONTROL SYSTEM PROGRAM	180

LIST OF TABLES

Table		Page
4.a.	CSTR System Parameters	42
4.b.	CSTR System Parameter Values	44
4.c.	Linear System Parameters	47
4.d.	Input Disturbance Parameters	59

LIST OF ILLUSTRATIONS

Figure		Page
1.a.	Interacting Control Configuration	5
1.b.	Noninteracting Control Configuration	6
3.a.	Arbitrary Two-Input, Two-Output System ...	20
3.b.	Input-Output Decoupled Subsystems	20
3.c.	System of Figure 3.a Showing One Assumed Internal Structure	21
3.d.	System of Figure 3.a Showing an Alternative Internal Structure	23
3.e.	Mesarovic's P-canonical Structure	25
3.f.	Mesarovic's V-canonical Structure	26
3.g.	Mesarovic's H-canonical Structure	27
3.h.	Illustration of Deviations of the System from the Desired Output State	34
4.a.	Heat Rate Curves for a CSTR	39
4.b.	Continuous Flow Stirred Tank Reactor Configuration	41
4.c.	Real and Virtual System Adjoinment in P-canonical Form	50
4.d.	V'-canonical Structure Illustrating Internal Feedback Signals	51
4.e.	V'-canonical Structure of System with Decoupling Controllers	52
4.f.	Application of Decoupling Controllers to Interacting Systems	53

Figure		Page
4.g.	Two Partially Noninteracting Systems Resulting from the Application of the Decoupling Controllers	55
4.h.	The ith Subsystem with Feedforward and Feedback Controllers Added	56
4.i.	Samples of the Gaussian Input Disturbances	60
4.j.	Heat Rate Curves for Reactor Considered	62
4.k.	Dynamic Response of Reactor Outputs to Input Disturbances	63
4.l.	Effects of System Stabilization	66
	(a) Q Used Freely	66
	(b) Q Heavily Restricted	66
4.m.	Dynamic Behavior of Mean Control State Deviation	70
4.n.	Dynamic Behavior of Mean Output State Deviation	71
4.o(a)	Control Performance Curves	74
(b)	Outputs and Command Inputs for Temperature Controlled Reactor	76
4.q.	Mean Control State Deviation v. Penalty Factor Ratio	81
4.r.	Mean Output State Deviation v. Penalty Factor Ratio	82
4.s.(a)	Performance Curves for Normal Penalty Factors	87
(b)	Outputs and Command Inputs for Interacting and Noninteracting Systems	90-91
4.t.	A Region of Admissible Penalties	93
4.u.	Effect of Linear Constraint Function on Control Signal	97

Figure		Page
4.v.	Interacting Control System Outputs with Linearly-Constrained Material Flowrate	99
(a)	Sub-Constrained Interacting Control	99
(b)	Linearly-Constrained Interacting Control	100
4.w.	Effect of Clipping Constraint Function on Control Signal	102
4.x.	Effect of Clipping Function Constraint on Interacting Control System	104
(a)	No Clipping Function	104
(b)	$\Delta Q_C = \pm 0.05$ Clip	105
(c)	$\Delta Q_C = \pm 0.025$ Clip	106
4.y.	Effect of Clipping Function Constraint on Noninteracting Control System	107
(a)	No Clipping Function	107
(b)	$\Delta Q_C = \pm 0.05$ Clip	108
(c)	$\Delta Q_C = \pm 0.025$ Clip	109
4.z.	Illustration of the Introduction of a Measurement Noise Vector	113
4.aa.	Performance Curves for System Subject to Output Measurement Noise	115
4.bb.	Interacting and Noninteracting Control System Responses in the Presence of Measurement Noise	116
(a)	Interacting Control	116
(b)	Noninteracting Control	117
4.cc.	Block Diagram Representation for System with Delay Controllers	123
4.dd.	Control Performance Curves for Time-Delay Systems	126

Figure		Page
5.a.	Simplification of Multivariable Control System Design	134
B.a.	A Block Diagram Representation of the V'-canonical Structure	163
B.b.	System Block Diagram Representation after Application of Uncoupling Controllers	165
B.c.	The ith Univariant Subsystem with Final Feedforward-Feedback Controllers	167
D.a.	Spectral Density of White Gaussian Noise.	176a
D.b.	System Used to Filter White Noise	177a

ON THE INTERACTING AND NONINTERACTING CONTROL OF MULTIVARIABLE STOCHASTIC SYSTEMS USING FEEDFORWARD-FEEDBACK CONTROLLERS

CHAPTER I

INTRODUCTION

As the need for near-optimal performance of existing and future chemical processes increases and as high-speed digital computers become more readily accessible to the chemical industry, the demand for the more-sophisticated multivariable control techniques will grow. The chemical process industry has, in the past, lagged far behind the electronic- and aerospace-oriented industries in the application of multivariable control theory. Perhaps this lag is justified due to the nature of chemical processes in comparison to the speed of elements inherent in the electronics industry. But as these control techniques are accepted in the chemical industry and the benefits of improved performance realized, this time lag will surely diminish.

Optimal multivariable control schemes normally fall into one of three major classes: 1. feedback control;

2. feedforward control; or 3. composite feedforward-feedback control. The first category, feedback control, is the oldest and most widely used means of control. With this type of control, the process outputs are monitored, compared to their respective reference values, and, on the basis of these error signals, the appropriate action taken to achieve output-reference correspondence. Hence, process time delays and noise in the output signals contribute to problems with this type of control. These problems are partially avoided with feedforward control which measures the input disturbances and attempts to counteract them before they affect the output responses. However, feedforward control is sensitive to errors in the dynamic model of the process.

The third class of compensators, composite controllers, are simply a combination of the previous two. Thus, shortcomings in one portion tend to be minimized in the other. It is with this type of controller that we are concerned in this dissertation.

Control processes can be divided into two general categories depending upon the control objective--servomechanism control and regulator control. In the former the objective is to control the process as it moves from one operating state to another while minimizing a parameter such as transition time or the energy expended during the transition. Regulator control is the control of interest

in this dissertation. Here the output is controlled at some desired set point in the presence of input load disturbances.

Let us now make one further distinction between control schemes. It has been stated that the interest of this dissertation is in regulatory control of multivariable processes by the use of feedforward-feedback control. Such control will be divided here into interacting and noninteracting control. Interacting control utilizes already-existing cross-couplings inherent in a multivariable system to improve the performance of that system. On the other hand, noninteracting control eliminates these interrelations and applies conventional single-variable control techniques to the resulting univariant systems. We will be interested in both of these categories in this dissertation.

Statement of the Problem

We will investigate the regulatory control of linear multivariable systems subjected to stochastic load disturbances. Such a system can be represented by the matrix equations

$$\dot{y}(t) = By(t) + Cm(t) + Du(t) \qquad (1.1)$$

$$q(t) = Ay(t) \qquad (1.2)$$

where $q(t)$ = system output vector

$y(t)$ = system state vector

$m(t)$ = manipulatable input vector

$u(t)$ = disturbance input vector

and A, B, C, D are time-invariant matrices and are not necessarily square. Such constant matrices are used because the control schemes considered in this dissertation eventually limit the applicability of their solutions to time-invariant systems. Such a restriction is generally made to simplify computations and it yields an adequate representation in most instances. Further, on the basis of results by Laning and Battin [L1] stating that in general physically-observed noise possesses a statistical characterization that is very nearly gaussian in nature, the measurable input u(t) will be considered to be gaussian random noise.

Interacting and noninteracting control schemes will be applied to the system of equations (1.1) and (1.2). Both of these control techniques will have configurations involving the use of feedback and feedforward controllers which taken collectively are optimal in some sense.

The interacting control configuration can be represented diagrammatically as in Figure (1.a). The interacting system is that system defined by equations (1.1) and (1.2). From this illustration the composite feedforward-feedback control law is easily seen to be as follows:

$$m(t) = Q_D u(t) - Q_C y(t) \qquad (1.3)$$

The noninteracting control configuration can be similarly depicted in block diagram form as in Figure (1.b). This configuration is most easily considered in the Laplace domain. Consequently, the composite command vector can be

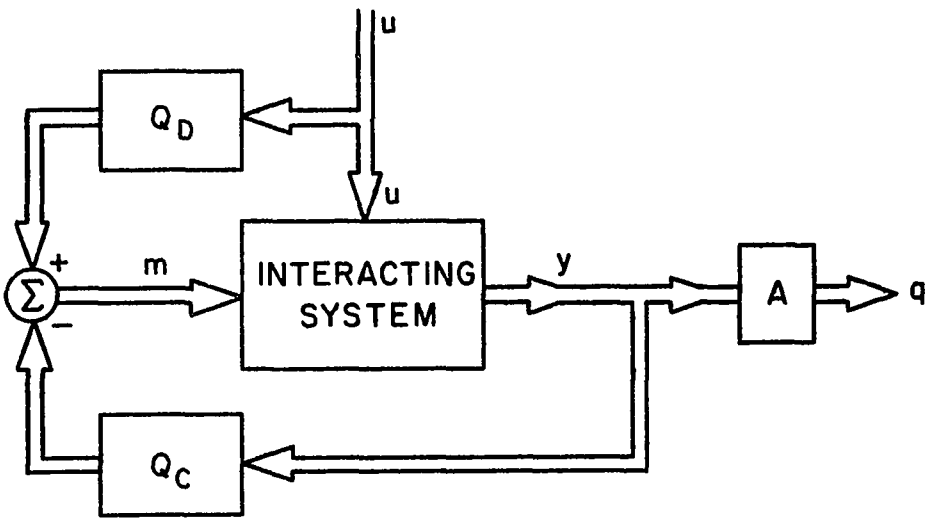

Figure 1.a

Interacting Control Configuration

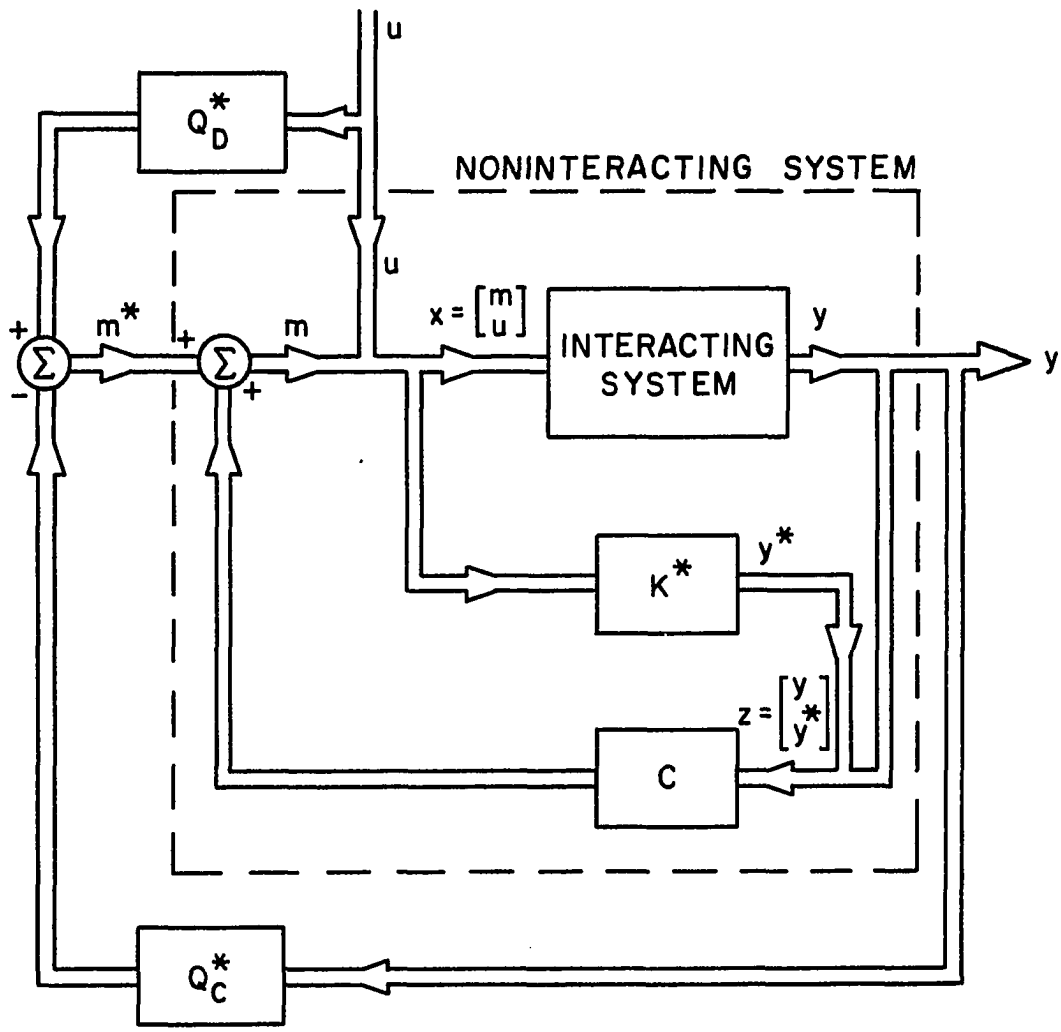

Figure 1.b

Noninteracting Control Configuration

written as in equation (1.3).

$$m^*(s) = Q_D^* u(s) - Q_C^*(s) y(s) \qquad (1.4)$$

The feedback controller Q_C^* will be seen later to be time-variant as opposed to the time-invariant Q_D^* and interacting controllers just mentioned. The relationship between the actual physically-manipulatable signal m and the manipulatable signal m* can be seen from Figure (1.b).

The noninteracting system is contained within the dashed lines of Figure (1.b). Here the original interacting system is decoupled by the application of the matrices of compensators K* and C(s). The reader is referred to Appendix B for further elaboration.

Literature Review

Feedback control has been a major part of the chemical process control field for some years while feedforward control evolved only in recent history. For a summary of past work in these areas the reader is referred to West [W2].

Composite feedforward-feedback control is an even more recent addition to the field of process control. In 1966, Johansen [W2] published his work in this area, but research on the composite controller itself was not his primary goal. Heidemann [H4] used the discrete maximum principle of Kalman [K1] to develop a composite controller which was composite only in the sense of adding the ideal feedforward controller to an optimal feedback controller. Newton, Gould, and Kaiser's [N1] work in the Laplace domain prompted Luecke

[L9] to develop an optimal composite controller limited by computational reasons to single variable systems.

In 1967, Greenfield and Ward [G3] introduced a structural analysis method which utilized additional information about the process to obtain unique optimal solutions to a class of composite feedforward-feedback control problems. Foster and Stevens [F3] have published results of modifying Mesarovic's V-canonical structural representation which they used to decouple multivariable systems with an unequal number of inputs and outputs. Feedforward and feedback control was used on the resulting univariant systems. Conventional single-variable optimization techniques were employed.

In 1968, Greenfield and Ward [G2] restored the V-canonical structure to its original form by including results of Bollinger and Lamb [B17] and showing the V-form could be applied directly even if only a submatrix of the process transfer matrix is square.

Then in 1969, West [W2] extended results of Merriam [M5] using Bellman's dynamic programming optimization to produce a composite feedforward-feedback controller which optimizes the linear stochastic system on the basis of a scalar quadratic performance index. West applied the technique to multi-order single-input systems and obtained excellent results.

Investigation of interacting and noninteracting control of multivariable systems began significantly in the late 1950's. The matrix methods introduced by Kavanagh in 1956

[K5] and 1957 [K10] and applied in 1958 [K6], form a basis for the study of multivariable systems control. Amara [A1] used the matrix methods in 1959 while developing a synthesis procedure for stationary stochastic multivariable systems.

In the next decade, the work was begun by Mesarovic [M6], Chatterjee [C3], Mitchell and Webb [M10], Nishida [N2] (with discrete systems), Horowitz [H6], and others. In 1962 and 1963, Mesarovic and cohorts Brockett [N2], Lefkowitz [L5], and Birta [B15] worked on interacting and noninteracting control directly, with Birta doing research on comparison schemes of these opposing techniques. Other major contributors in these years were Chen, Mathias, and Sauter [C4], Bohn [B16], Hsieh [H7], and Mathias [M1]. Multivariable control theory was extended further in 1964 with Sprague [S12], Morgan [M12], [M13], and Mesarovic and Birta [M9] publishing results. Finally, during the last half of the decade Kushner [K9], Tyler and Tuteur [T3], Liu [L8], Kang [K4], Fitzpatrick and Law [F1], and Gilbert [G1] in that order were among the contributors to the theory of multivariable control.

No attempt has been made to discuss the specific results obtained by those men listed above. Credit is simply being given them for having done work in the past on the control of multivariable systems. How effective the methods proposed are in relation one to the other is unknown. Further, the list just given of authors in this area is far from exhaustive, but the references given by those included should suffice to lead the reader to most of the remaining works.

CHAPTER II

MATHEMATICAL BACKGROUND

Concepts from the Theory of Random Process

A knowledge of some concepts from random noise theory is essential to the understanding of portions of this dissertation. Since the reader may not have such a knowledge of the tools necessary to deal effectively with stochastic variables, a few important concepts will be reviewed here.

There have been many books and articles published relating in some manner to random noise theory. Just a few of these are listed among the references appearing near the end of this paper. Three of the important books on this subject are those by Laning and Battin [L1], Bendat [B10], and Papoulis [P3]. Many of the following concepts have come from these sources.

Most people have at least a vague idea of what a random process is. And, in fact, there are many descriptions of what is involved in such a process. Bendat gives the following definition:

> A random process, also called a time-series, or a stochastic process, is an ensemble (collection) of

time functions $\{^{k}x(t)\}$, $-\infty<t<\infty$, $k = 1, 2, 3, \ldots$ (perhaps even uncountable), such that the ensemble can be characterized through statistical properties.

Knowing exactly what has been the past behavior of a random process tells little or nothing about the future action of the process. About all one can do is obtain large past-behavioral records and average these records in a suitable way to obtain some sort of mean or average value and use this as a measure of future behavior. From these mean or mean-squared values, one often has enough statistical information to say something significant about the probable limits of future behavior.

The mean, or expected, value of a random signal seems as good a place as any to begin the review. The expected value of a random signal, $x(t)$, is a probability-weighted average over the set of admissible values of the signal.

$$E[x(t)] = \int_{-\infty}^{+\infty} xf(x)dx \qquad (2.1)$$

where $f(x)$ is the frequency function of $x(t)$.

Often a measure of the motion of the random variable $x(t)$ about its mean value is desired. The variance, or mean-squared value of $x(t)$ about its mean, is frequently used in this case. It is defined as the square of the standard deviation σ.

$$\sigma^2 = E[x(t) - \hat{x}(t)]$$

$$= \int_{-\infty}^{+\infty} [x(t) - \hat{x}(t)]^2 f(x)dx \qquad (2.2)$$

where $\hat{x}(t)$ is the expected value of $x(t)$.

In many practical instances, a stochastic signal may be dependent on a deterministic signal. Hence, knowing the value of this deterministic signal at a given instant should help to predict the future value of the stochastic signal. In this case the expected value is modified to account for this dependence. This change results in a conditional expectation of a random signal y subjected to hypothesis x.

$$E[y|x] = \int_{-\infty}^{+\infty} yf(y|x)dy \qquad (2.3)$$

where $f(y|x)$ is the conditional frequency function.

Another statistical parameter often encountered in dealing with random processes is the correlation function of the stochastic signal. It is defined as

$$\theta_{xx}(t_1,t_2) = E[x(t_1)x(t_2)] =$$

$$\int_{-\infty}^{+\infty}\int_{-\infty}^{+\infty} x(t_1)x(t_2)f_2(x_1,t_1;\ x_2,t_2)dx_1dx_2 \qquad (2.4)$$

where f_2 is the second probability density function.

At this point some useful observations can be made. If the parameters t_1 and t_2 are both assigned the same value of t, the correlation function reduces to the form of the mean-squared value of the random signal $x(t)$.

$$\theta_{xx}(t,t) = E[x(t)x(t)] = \overline{x(t)^2} \qquad (2.5)$$

If two random signals x(t) and y(t) are considered, the cross-correlation function is of interest.

$$\theta_{xy}(t_1,t_2) = E[x(t_1)y(t_2)] \qquad (2.6)$$

Further, if x and y are statistically independent,

$$\theta_{xy}(t_1,t_2) = E[x(t_1)]E[y(t_2)] \qquad (2.7)$$

and their cross-correlation function is simply the product of their means. This being the case, if one is dealing with random perturbations from the mean, the expected value of these perturbations would be zero and $\theta_{xy}(t_1,t_2) = 0$. The existence of the cross-correlation function necessitates giving θ_{xx} a special name. The name auto-correlation function has been assigned.

Related to the correlation function is the energy, or power, spectral density function.

$$\phi_{xx}(s) = \frac{1}{2\pi}\int_{-j\infty}^{+j\infty} \theta_{xx}(\tau)e^{-s\tau}d\tau \qquad (2.8)$$

It can be seen that the spectral density is the Fourier transform of its correlation function.

One will notice in equation (2.8) the presence of a single subscript in the correlation function. This occurs in the study of stationary random signals where the statistical characterization is not a function of time. Here the

time interval $t_1 - t_2$ is important rather than the individual times themselves. There exist more complicated descriptions of the power spectra for non-stationary processes.

Dynamic Programming

The objective of this section is to review the basic mathematical theory of Richard Bellman's dynamic programming optimization. The control signal utilized in the interacting control is derived by the multivariable application of this optimization technique. The analysis follows the same pattern as those of Merriam [M5] and West [W2].

Consider the system with describing differential equations

$$\dot{x} = f(x,m,u,t) \tag{2.9}$$

where the control signal $m(t)$ is restricted to a closed set M. The basic objective is to determine the manipulatable signal $m(t) \varepsilon M$ which will minimize the performance functional

$$e(t) = \int_t^T h[x(t),m(t),t]dt. \tag{2.10}$$

Merriam [M6] shows that this minimum index is a function of solely the state $x(t)$ and the time t. This minimum value will be represented here as

$$E[x(t),t] = \min_{m \varepsilon M} e(t). \tag{2.11}$$

A dummy time variable, μ, is defined on the interval [t,T] so that the real time t may be treated as a constant in the optimization process. Hence, (2.11) may be rewritten as

$$E[x(\mu),\mu] = \min_{\substack{m\in M \\ \sigma\in[\mu,T]}} \int_{\mu}^{T} h[x(\sigma), m(\sigma),\sigma]d\sigma \qquad (2.12)$$

Bellman's Principle of Optimality is necessary at this point. The principle can be simply stated as follows:

> An optimal policy has the property that whatever the choice of the initial state of the system and the initial command vector, the remaining choice of command vectors must consititute an optimal policy with respect to the system state resulting from the application of the initial command vector.

This principle is used to replace the optimization on the interval $[\mu,T]$ by successive optimizations on the intervals $[\mu,\mu+\delta]$, $[\mu+\delta,T]$; $\delta>0$. Thus, equation (2.12) will be expanded into the following form:

$$E[x(\mu),\mu] = \min_{\substack{m\in M \\ \sigma\in[\mu,\mu+\delta]}} \left\{ \min_{\substack{m\in M \\ \sigma\in[\mu+\delta,T]}} \left[\int_{\mu}^{\mu+\delta} h[x(\sigma),m(\sigma),\sigma]d\sigma + \int_{\mu+\delta}^{T} h[x(\sigma),m(\sigma),\sigma]d\sigma \right] \right\}. \qquad (2.13)$$

Only the second integral of equation (2.13) is dependent upon the selection of $m(\sigma)$ on $[\mu+\delta,T]$ so that (2.13) may be rewritten as follows:

$$E[x(\mu),\mu] = \min_{\substack{m\in M \\ \sigma\in[\mu,\mu+\delta]}} \left[\int_{\mu}^{\mu+\delta} h[x(\sigma),m(\sigma),\sigma]d\sigma + \min_{\substack{m\in M \\ \sigma\in[\mu+\delta,T]}} \int_{\mu+\delta}^{T} h[x(\sigma),m(\sigma),\sigma]d\sigma \right] \tag{2.14}$$

Hence, on account of definition (2.12), the minimum cost index is

$$E[x(\mu),\mu] = \min_{\substack{m\in M \\ \sigma\in[\mu,\mu+\delta]}} \left[\int_{\mu}^{\mu+\delta} h[x(\sigma),m(\sigma),\sigma]d\sigma + E[x(\mu+\delta),\mu+\delta] \right] \tag{2.15}$$

This is the discrete form of the dynamic programming algorithm with which most people are familiar due to basic courses in optimization theory.

The continuous form of the algorithm is found by expanding $E[x(\mu),\mu]$ in a Taylor series. Writing only the linear terms,

$$E[x(\mu+\delta),\mu+\delta] = E[x(\mu),\mu] + \left[\frac{\partial E[x(\mu),\mu]}{\partial x(\mu)}\right]^T \dot{x}(\mu)\delta + \frac{\partial E[x(\mu),\mu]}{\partial \mu}\delta + \ldots \tag{2.16}$$

which when substituted back into (2.15) yields

$$E[x(\mu),\mu] = \min_{\substack{m\in M \\ \sigma\in[\mu,\mu+\delta]}} \left[\int_{\mu}^{\mu+\delta} h[x(\sigma),m(\sigma),\sigma]d\sigma + E[x(\mu),\mu] + \left[\frac{\partial E[x(\mu),\mu]}{\partial x(\mu)}\right]^T \dot{x}(\mu)\delta + \left[\frac{\partial E[x(\mu),\mu]}{\partial \mu}\right]\delta + \ldots\right] \tag{2.17}$$

By rearrangement of this equation and by allowing the increment δ to approach zero, the continuous form of the algorithm is obtained in the limit.

$$\min_{m\in M}\left\{h[x(\mu),m(\mu),\mu] + \left[\frac{\partial E[x(\mu),\mu]}{\partial x(\mu)}\right]^T \dot{x}(\mu) + \left[\frac{\partial E[x(\mu),\mu]}{\partial \mu}\right]\right\} = 0$$

This equation is used to initiate the development of the optimal control law for the interacting control scheme considered. This development is presented in Appendix A.

Obviously, this derivation was not rigorous mathematically. However, such strict derivations do appear in analyses by Bellman [B5], Lapidus and Luus [L2], and others.

CHAPTER III

MULTIVARIABLE CONTROL CONCEPTS

Multivariable Systems

It would be utterly impossible to discuss the theory of multivariable systems and its development without borrowing to some degree from Mihajlo D. Mesarovic. Consequently much of the following section was derived from books or articles authored by this pioneer of multivariable control systems theory. Mesarovic's works are illuminated by such insight into this complex area that anyone beginning an investigation into the field of multivariable control systems would be well-advised to read at least a portion of his works in this area. Thus, in this section, I wish simply to condense certain areas of his work that apply directly to the subject of this dissertation.

Mesarovic [M6] has divided the study of the control of multivariable systems into three major steps. First, let control of the multivariable system be the primary objective. Thus, find the system which will best expedite this goal. Once this has been accomplished, the second step is to determine the type of control desirable with the behavior of the

system in mind. This might call for a choice between feedforward and feedback control or, perhaps, even a combination of the two--composite control. Further, is decoupling of the multivariate system called for or can interacting control be used? Obviously, the third step would be the actual synthesis of the controllers themselves and analysis of their performance. Credit for previous works in these areas was dispersed in Chapter I. This section deals mainly with the first step of the study of control of multivariable systems.

Mesarovic [M6] has discussed why the uncertainty in the internal structure of a univariant system is trivial. But he points out that this is not the case for multivariate systems and gives the example which will now be briefly discussed. The following concepts are of great importance in the theory of noninteracting control.

Suppose you are confronted with a two-input, two-output system such as that in Figure 3.a. The control objective is given as input-output decoupling. That is, y_i should depend only on x_i. Let it be further specified that this objective be accomplished by the use of feedback controllers alone.

To begin with, let us assume an internal structure such as that in Figure 3.c. The Laplace domain equations for this system can then be written as

$$y_1(s) = P_{11}(s)\ x_1(s) + P_{12}(s)\ x_2(s) \qquad (3.1)$$

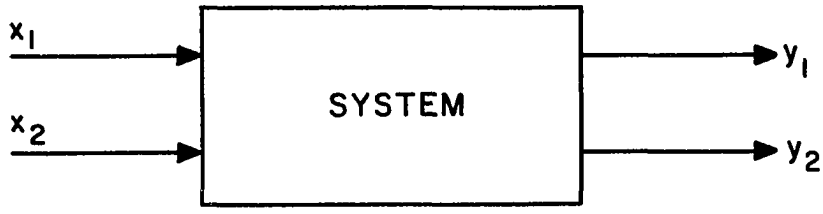

Figure 3.a

Arbitrary Two-input, Two-output System

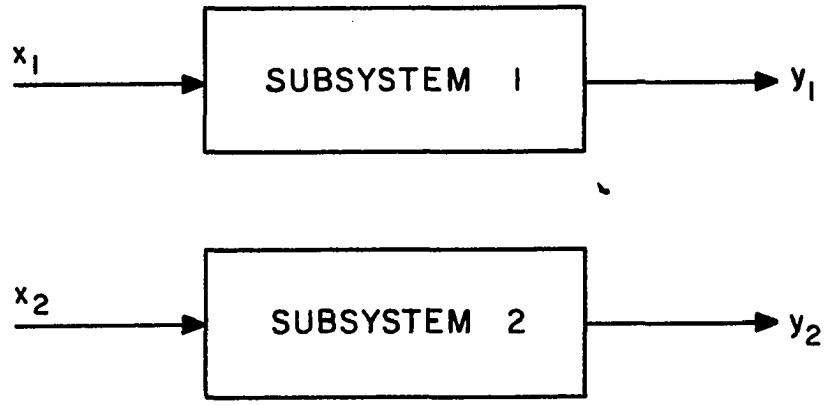

Figure 3.b

Input-output Decoupled Subsystems

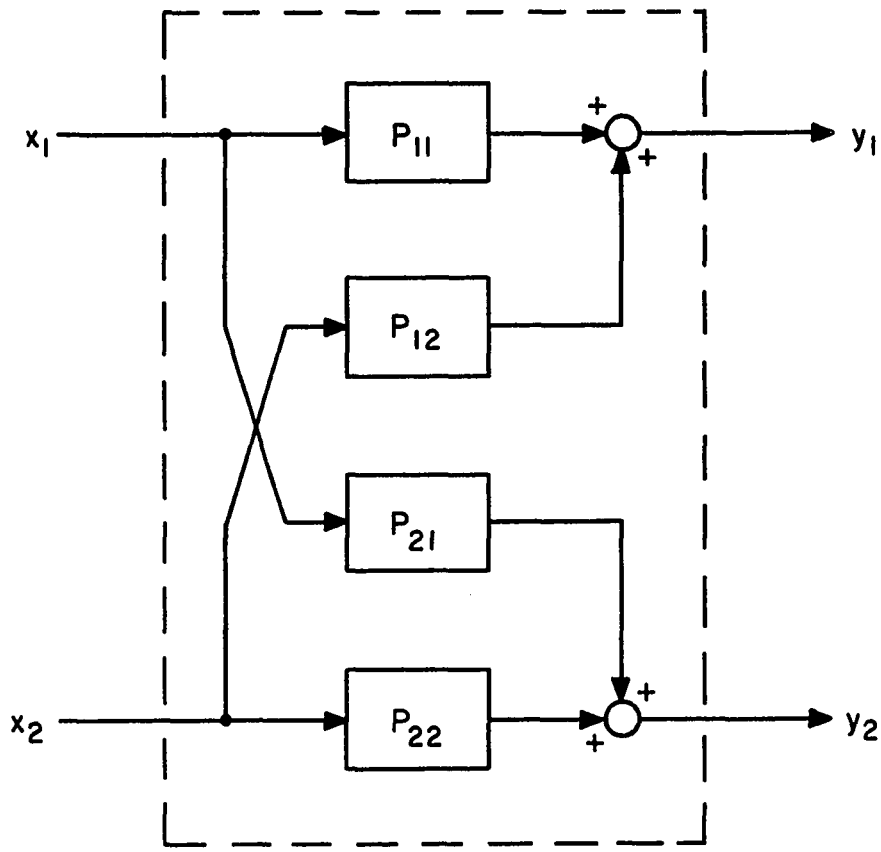

Figure 3.c

System of Figure 3.a Showing One Assumed Internal Structure

$$y_2(s) = P_{21}(s)\ x_1(s) + P_{22}(s)\ x_2(s) \qquad (3.2)$$

The task then can be viewed as one of eliminating the interactions terms $P_{12}(s)\ x_2(s)$ and $P_{21}(s)\ x_1(s)$ from equations (3.1) and (3.2), respectively. Kavanagh [K6] has solved this problem and shown the need of four feedback controllers to accomplish the decoupling.

Now consider the result when an internal structure such as that of Figure 3.d is assumed. The time-domain equations for this structure may be written as follows:

$$y_1(t) = F_1(x_1 + V_{12}y_2) \qquad (3.3)$$

$$y_2(t) = F_2(x_2 + V_{21}y_1) \qquad (3.4)$$

The objective now can be stated as one of eliminating the interactions represented by the internal feedback loops. Obviously, since the interactions are, in this case, represented as feedback loops, they may be simply cancelled by the use of two external feedback controllers.

Hence, even in this simple example, the importance of the internal system structure chosen is apparent. The choice of the latter structure has effected a 50% decrease in the total number of controllers necessary to achieve the decoupling objective.

Now that the importance of the internal structure of multivariable systems has been verified, a review of the most important of such structural representations will be conducted very briefly for later reference. These are the

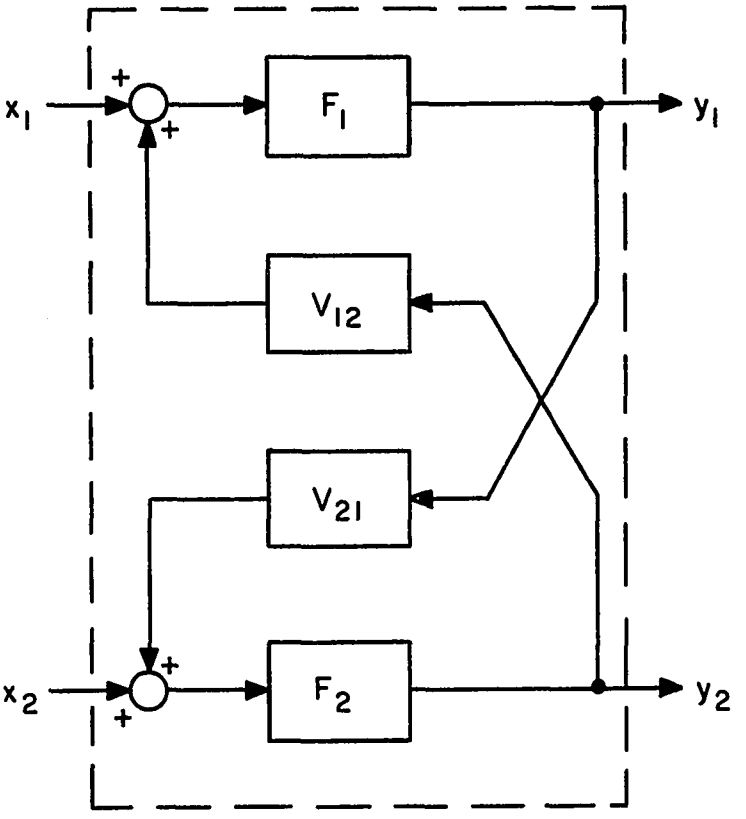

Figure 3.d

System of Figure 3.a Showing an Alternate Internal Structure

"canonical structures" of Mesarovic.

The structure shown in Figure 3.c is one in which each output is explicitly dependent upon all inputs. This structure is referred to as P-canonical in nature. Mesarovic depicts this structure as in Figure 3.e. If linear, the system inside the dashed line may be represented as simply an nxm matrix of transfer functions.

The structure shown in Figure 3.d is generally known as V-canonical. Mesarovic set up this structure to handle systems with an equal number of inputs and outputs. In this way each output may be expressed as a function of only one input and all other outputs.

$$y_j(t) = f_j[x_j(t), y_1(t), \ldots, y_n(t)]; \; j = 1 \ldots, n \tag{3.5}$$

This structure is generally depicted as in Figure 3.f. This structure or a modification of it is often used in feedback-elimination decoupling techniques.

The last of the three major structural representations is known as H-canonical. Mexarovic suggests using this structure with systems with an unequal number of inputs and outputs. This structure is a combination of the P- and V- canonical structures as is seen from Figure 3.g.

There are, of course, other noncanonical structural representations available for use. It may also be necessary or expedient for the designer to form original structures to serve his needs. But the preceding structures are the most common and the discussion of them will help to clarify

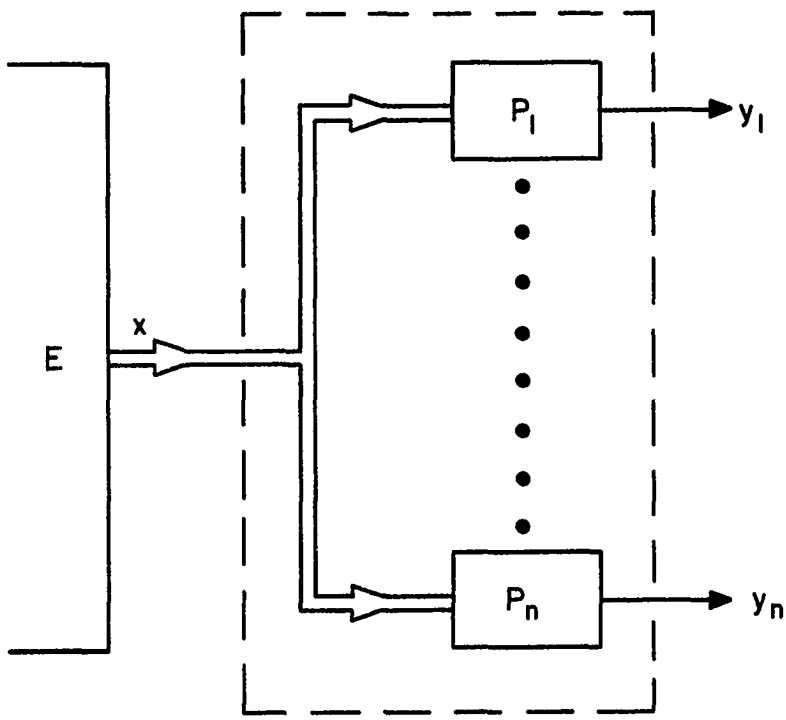

Figure 3.e

Mesarovic's P-canonical Structure

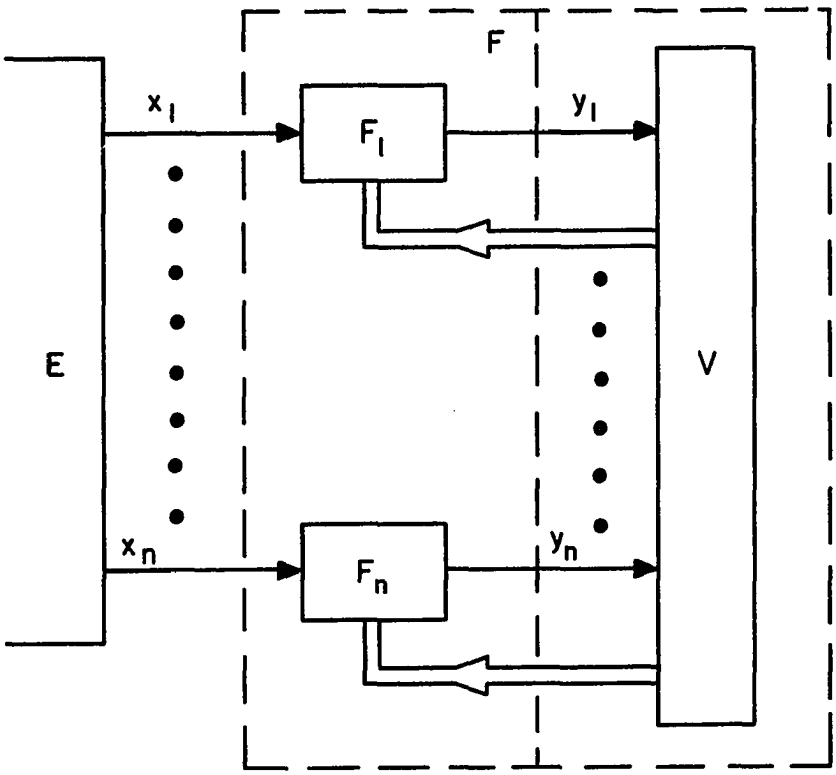

Figure 3.f

Mesarovic's V-canonical Structure

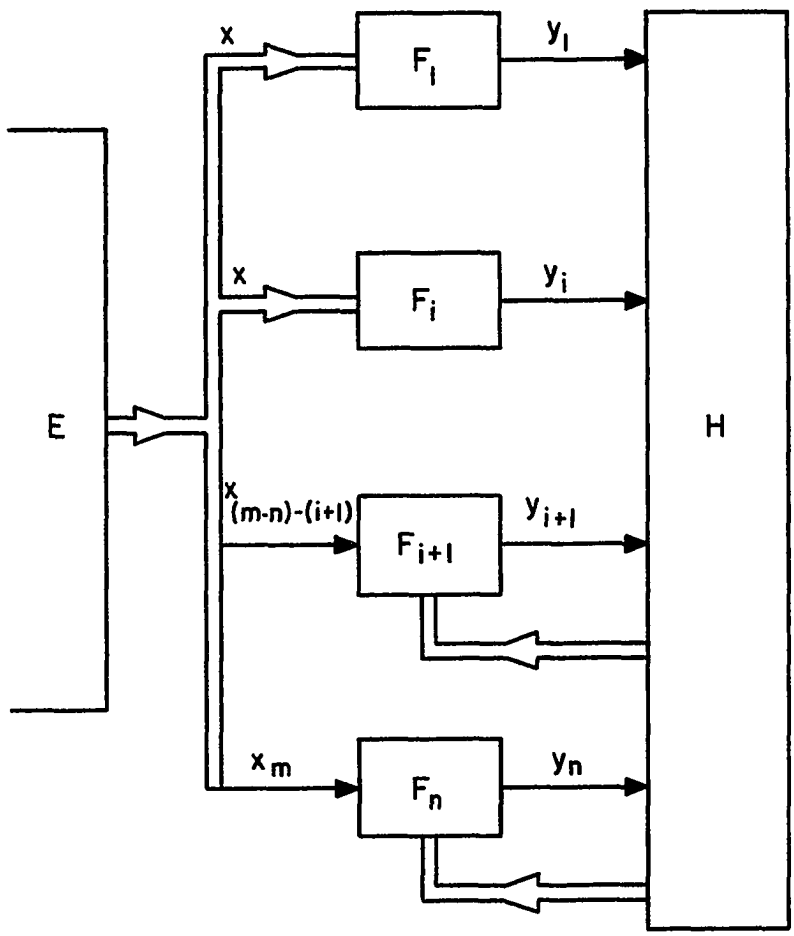

Figure 3.g

Mesarovic's H-canonical Structure

other sections of this dissertation.

Interaction and Noninteraction

The descriptive adjectives "interacting" and "noninteracting" are used frequently throughout the course of this dissertation. This section will be devoted primarily to the clarification of these terms as used in relation to multivariable systems.

We speak of the interactions, interrelations, or intercoupling existing in a multivariable system in terms of its inputs and outputs. A system's inputs are commonly broken down into two classes--command inputs and disturbance inputs. The command (or control) input is a signal applied to the system in such a manner that it affects the outputs in a desired fashion and at the same time contributes to causing the entire system to operate optimally with respect to a predefined performance criterion. The disturbance input as a class includes all other effects upon the system which are generally considered to be detrimental to the aim of obtaining a desired output response.

Now that the two general classes of inputs have been defined, let us proceed to the description of the types of system interaction. If changes in the i-th input tend to produce changes in the j-th output, the interaction is referred to as "input-output". Corresponding to each of the two classes of inputs described above there is a type of input-output interaction. Normally, when the terms

"decoupling" or "uncoupling" are used, command input-output noninteraction is implied. However, this need not be the case. If there are large differences in the amplitudes of the variations in the disturbance inputs, it may be desirable to channel the effects of those inputs with the large amplitude variations to less critical outputs. In this case disturbance input-output noninteraction is involved.

Another type of interaction is "output-output" interaction. Here, changes in the i-th output tend to cause changes in the j-th output. It is in this sense that Mesarovic will normally use the terms interaction or interrelation.

It should be instructive to consider the limiting case of multivariable interaction. Mesarovic [M6] defines an infinitely intercoupled (with respect to external changes) system as one in which the application of an external device of any type can produce no change in the relationship between the outputs of the system. The intercoupling referred to here is, of course, output-output interaction. On the other end of the scale there is a complete uncoupled system. Here we speak of n single variable subsystems adjoined to form an n-input n-output multivariable system in which each subsystem is totally independent of the other n-1 subsystems. Here both input-output and output-output noninteraction is implied.

In Appendix B of this dissertation, "partial" decoupling

is mentioned. Such decoupling falls short of completely decoupling in the sense that each output is uncoupled from its original dependencies and made a function of one command input and one disturbance input. Here we have output-output noninteraction with some degree of both command and disturbance input-output decoupling attempted. Later in the algorithm of Appendix B, complete decoupling is achieved.

I am sure that the various types of intercoupling have been defined differently in other sources. However, for the sake of consistency the above terms will be used in the sense that they are defined in this section. It is in the framework of these descriptions of interaction that Mesarovic and his proteges Birta [B15] and Brockett [B20] work on the control of multivariable systems.

Degree of System Interaction

In the preceding section, the limiting cases of complete noninteraction and infinite interaction were defined. The vast majority of multivariable systems fall between these extremes and, because of this, a measure of interaction strength seems useful and meaningful. A simple examination of the transfer functions for such systems will yield little information about the strength of interrelations existing between the outputs and inputs.

Measures of interaction strength have been developed. Among these measures are those of Mesarovic [M6], Brockett

[B20], and Bristol [B19]. Mesarovic lead the way in the enumeration of some desirable characteristics which such a measure should possess. Because it was Mesarovic, the list refers to output-output interaction measures. He also tabulates some interaction measures presented as a function of the internal structure of the multivariable system. Later Brockett, under the tutelage of Mesarovic, continued this work and extended the concept to input-output interaction as well as output-output. More recently Bristol has extended the work of other researchers in this area and shows how his measure relates to its own sensitivity and to system stability.

These measures will not be given in this dissertation. This section is merely intended to point out their existence and their applicability in selecting preferred processes with which to study the control of multivariable systems.

Multivariable System Stability

The method of analyzing the stability of multivariable systems is not too different from that of single variable systems. Normally, in the development of a multivariable control scheme, stability considerations are built into the derivation so that, at least, asymptotic stability becomes inherent in the control configuration. Asymptotic stability in the large is assured for the control system resulting from the application of the controllers derived by the method of dynamic programming as described in Appendix A.

This is because the performance criterion upon which the optimization scheme depends is a Lyapunov function. Similarly, the multivariable control scheme of Appendix B alters its control parameter selection such that the resulting control system will be stable.

Stability of a multivariable control system may be verified by an examination of the poles of the overall transfer matrix for the system. This examination has been reduced to a consideration of roots of the characteristic matrix equation for the system as it appears in the denominator of each transfer function in the transfer matrix. The criterion is that the poles of each transfer function must not fall in the right-half plane. Some poles and zeros may cancel within a transfer function concealing the presence of a right-half plane pole.

Further, these analyses are applicable only to linear multivariable systems. But a nonlinear system may be linearized near a steady-state point and, if the linear system is found to be stable, the nonlinear will be stable, at least, locally or in the near vicinity of the linearization point [L2]. If the linear system is found to be unstable, the corresponding nonlinear system will also be unstable.

Control System Performance

Methods of performance evaluation of control systems subjected to stochastic load disturbances have been utilized

by Luecke [L9] and West [W2]. The measure of merit employed in the evaluation was not new; it was simply the mean squared value of the output signal. Laning and Battin [L1] and Newton, Gould, and Kaiser [N1] show that the mean squared value of a signal is simply the autocorrelation function evaluated for a zero time increment in the case of stationary signals. The reader may refer to Luecke [L9] for the derivation of the following relation for the mean squared value of a signal y(t).

$$E[y^2(t)] = \theta_{yy}(0) = \frac{1}{2\pi j}\int_{-j\infty}^{+j\infty} P_u(s)P_u(-s)\phi_{uu}(s)ds \qquad (3.6)$$

where the disturbance input u(s) is related to the output y(s) by the transfer function $P_u(s)$ and where $\phi_{uu}(s)$ is the spectral density function for the random disturbance u(s). Newton, Gould, and Kaiser [N1] illustrate a method of evaluating this integral by expressing the integrand as a ratio of the products of polynomials. This technique is fine for single-input systems, but for systems with multiple disturbances the formation of this ratio becomes quite tedious and, in fact, infeasible as the number of disturbance inputs grows. Further, for multiple-output systems, some type of balance must be attained for deviations in the various individual outputs. While the attenuation of variations in one particular output might be quite

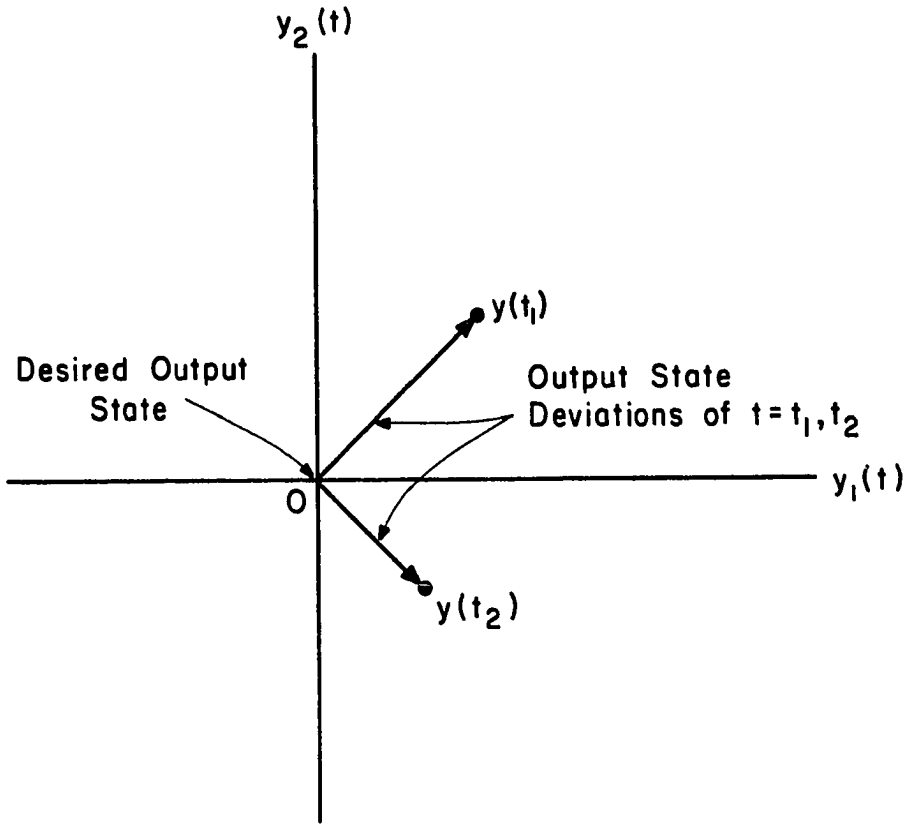

Figure 3.h

Illustration of Deviations of the System from the Desired Output State

satisfactory, that of another could be unacceptable. Then, too, the regulation of certain outputs might be more important than the control of others. These considerations imply the normalized weighting of all outputs taken collectively.

Consider the representation of all possible states that a two-output system might attain. A two-dimensional euclidean space such as that of Figure 3.h will suffice for this representation. Let a normalized, perturbation state vector be denoted by $y(t) = [y_1(t), y_2(t)]$. The origin of the two-dimensional space represents the desired output state. Then, any other point in the space corresponds to a deviation from this desired-output setpoint vector. Such a deviation of the output state might occur at a time t_1. Disturbances might cause the state to deviate in another direction at $t = t_2$, and so on. Because variations in one output could possibly be more tolerable than those of another, deviations the same distance from the origin, but in different directions, should not necessarily carry the same weight.

With these considerations in mind, the mean output-state deviation, $\overline{OSD}$, can be written as follows for a two-dimensional system

$$\overline{OSD} = \frac{1}{T} \int_0^T [\pi_1^2 y_1^2 + \pi_2^2 y_2^2]^{1/2} \, dt \qquad (3.7)$$

Then in this two-dimensional case, a state corresponding to the mean output state could fall anywhere along an ellipse about the origin with semi-axes $1/\pi_1$, and $1/\pi_2$. The T of equation (3.7) represents the terminal time of the process.

Let us consider now the control effort involved in attaining a certain quality of control performance. If we assume two control variables in a multivariable system, a pseudo-control effort, the mean control state deviation, can be defined similarly to equation (3.7).

$$\overline{CSD} = \frac{1}{T} \int_0^T [\gamma_1^2 \, m_1^2 + \gamma_2^2 \, m_2^2]^{1/2} \, dt \qquad (3.8)$$

Here the control vector $m(t) = [m_1(t), m_2(t)]$ has components weighted by the square of the penalty factors γ_1 and γ_2. These factors would have the effect of penalizing the controller for the over-use of one manipulatable variable in relation to the use of another. Once again a representation such as that of Figure 3.h could be used where the origin now denotes the use of no control effort. Further, such a control space could be limited in extent by the existence of saturation constraints on the control variables.

The mean output state deviation and the mean control state deviation could be reformulated to account for the fact that positive and negative deviations in any

particular output or control variable might not be equally acceptable. For instance, it might be necessary to control an output temperature at a certain set point such that a $-\Delta T^{o}R$ variation in this temperature was more or less costly than a $+\Delta T^{o}R$ change. This would, of course, depend on specific operational requirements.

In conclusion, the mean values presented in this section simply attempt to split the output and control components of a combined performance index such as that of equation (A.3). A performance index similar to this one can be used to compare the performances of competing control configurations. This particular technique was used by Mesarovic and his protege Birta [B15] in the establishment of an "interacting domain" in which the performance of a particular interacting control system was determined to be superior to that of the "corresponding" noninteracting system. This and the other concepts introduced in this section should be sufficient for the purposes of this investigation. The extension of equations (3.7) and (3.8) to systems with more than two outputs or control variables follows directly.

CHAPTER IV

MULTIVARIABLE SYSTEM SIMULATIONS

This investigation will center about the continuous stirred-tank reactor. There is a multitude of information available concerning this type of multivariable system because of its frequent use in the application and development of control theory and stability analyses. In the early 1950's, van Heerden [H3] performed a great deal of work in the area of autothermic processes. His publishings aided in the development of this continuous reactor. In 1961, Kermode and Stevens [K7] utilized the analog computer and conventional controllers to determine the regions of stability of a particular reactor. Seibenthal [S7], Weber [W1], Berger [B11], and Foster [F4] are among those who have done dissertation research with the CSTR. Under the direction of Stevens, Foster developed one of the control techniques used in this dissertation applying their method to the CSTR.

There is more than one possible steady state of a tank-flow reactor. They are, however, not all necessarily stable. This fact is obvious from consideration of a

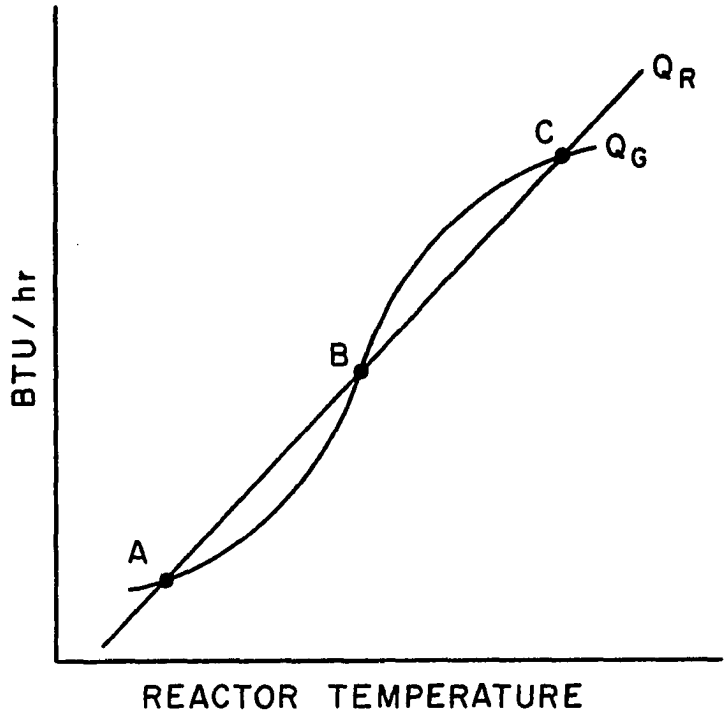

Figure 4.a

Heat Rate Curves for a CSTR

typical heat generation-removal plot such as that of Figure 4.a. The heat-generation curve has a sigmoidal shape which may, consequently, be intersected in three places by the linear heat-removal plot. If operation is attempted at conditions of point B, a slight increase in reactor temperature will cause the system to seek out the higher steady-state point C. This comes about as a result of the greater rate of heat-generation over that of heat-removal to the right of point B. If the temperature is decreased by a disturbance, the rate of heat removal is greater than that of heat generation and the temperature reduces further to state A. Similar arguments can be made to verify that states A and C are stable operating points. The system discussed in the next section will attempt operation at an unstable point such as that of point B.

Continuous-Flow Stirred-Tank Reactor

That this investigation will involve the regulation of a typical continuous-flow stirred-tank reactor was mentioned earlier. The particular reactor will be precisely the one for which system parameters were specified by Foster [F4]. The input reactant is undergoing a first-order reaction of the type $X \xrightarrow{k}$ products with the rate of conversion given by $dX(t)/dt = kX(t) = A'e^{-E/RT(t)}X(t)$. A sketch of the reactor appears in Figure 4.b with the definition of symbols given in Table 4.a. By performing heat and mass balances, the differential equations relating to the rate

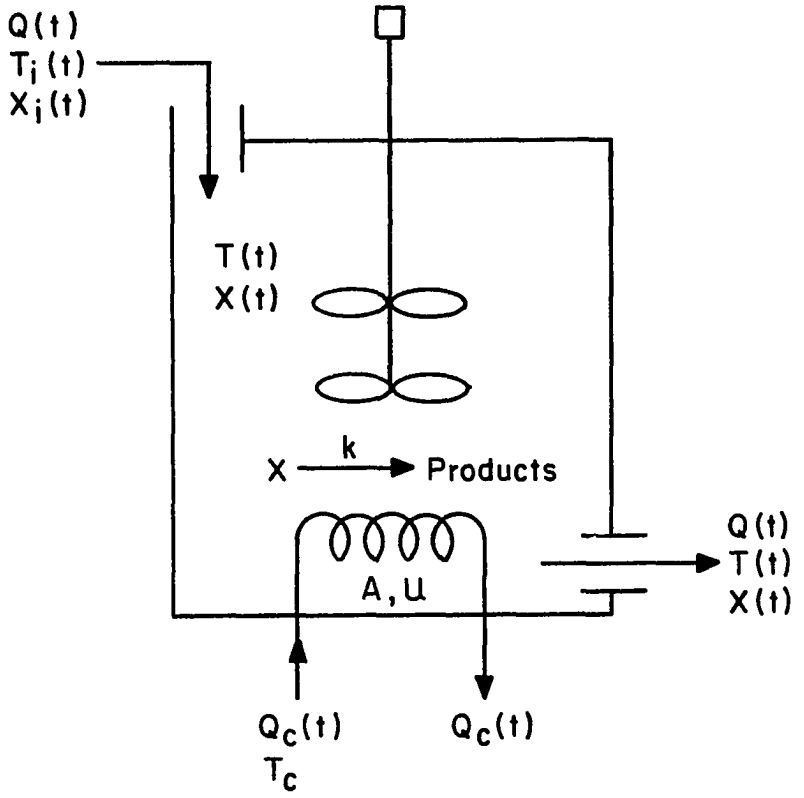

Figure 4.b

Continuous Flow Stirred-Tank Reactor Configuration

Table 4.a

CSTR System Parameters

Parameter Symbol	Symbol Meaning
$T(t)$	Output temperature, ^{o}R
$X(t)$	Output concentration, lb.-moles/ft^3
$Q(t)$	Material flow rate, ft^3/sec.
$Q_c(t)$	Coolant Flow rate, ft^3/sec.
$T_i(t)$	Input temperature, ^{o}R
$X_i(t)$	Input concentration, lb.-moles/ft^3
U	Cooling coil heat transfer coefficient, BTU/sec. ft^2-^{o}R
A	Cooling coil heat transfer area, ft^2
C_p	Reactor fluid heat capacity, BTU/lb.-^{o}R
C_c	Coolant heat capacity, BTU/lb.-^{o}R
ρ	Reactor fluid density, lbs/ft^3
ρ_c	Coolant density, lb/ft^3
V	Reactor volume, ft^3
ΔH	Heat of reaction, BTU/lb.-mole
k	Reaction coefficient, $sec.^{-1}$
A'	Reaction constant, $sec.^{-1}$
T_c	Coolant temperature, ^{o}R
E	Activation energy, BTU/lb.-mole
R	Gas Constant, BTU/lb.-mole^{o}R

of change of the outputs T(t) and X(t) may be determined.

$$\frac{dX(t)}{dt} = \frac{Q(t)}{V}\,[X_i(t) - X(t)] - A'e^{-E/RT(t)}X(t) \qquad (4.1)$$

$$\frac{dT(t)}{dt} = \frac{Q(t)}{V}\,[T_i(t) - T(t)] - \frac{UAF(t)\,[T(t) - T_c]}{V\rho C_p\,[F(t) + 1]}$$

$$- \frac{A'e^{-E/RT(t)}\Delta HX(t)}{\rho C_p} \qquad (4.2)$$

Accompanying these equations are the following assumptions:

1. Fluid parameters such as density and heat capacity are constant over the range of interest.
2. The coolant temperature is not a manipulative variable.
3. An arithmetic mean temperature differential across the coil walls is satisfactory throughout the range of operation.

Kermode and Stevens [K7] have carried out a stability analysis on this system and found an unstable point at $T = 718.^{o}R$ and $X = 0.241$ lb. moles/ft^3 corresponding to the set of system parameters given in Table 4.b. Control will be attempted at this unstable steady-state subject to gaussian random input signals $T_i(t)$ and $X_i(t)$. These inputs are disturbed about the steady-state values assigned them in Table 4.b. Standard deviations of approximately one percent were chosen arbitrarily for both stochastic signals along with noise frequencies of 1.0 sec.$^{-1}$ and 1.5 sec.$^{-1}$

Table 4.b

CSTR System Parameter Values

System Parameter	Actual Value	Units
T_o	718.	^oR
X_o	.214	lb. moles/ft^3
Q_o	.5	ft^3/sec.
Q_{co}	.2	ft^3/sec.
T_{io}	690.	^oR
X_{io}	.5	lb. moles/ft^3
U	.0286	BTU/sec.ft^2-^oR
A	489.	ft^2
C_p	1.	BTU/lb.-^oR
C_c	1.	BTU/lb.-^oR
ρ	60.	lb./ft^3
ρ_c	60.	lb./ft^3
V	100.	ft^3
ΔH	$-2x10^4$	BTU/lb.-mole
A'	$3x10^{11}$	Sec.$^{-1}$
T_c	520.	^oR
E	$4.5x10^4$	BTU/lb.-mole
R	1.98	BTU/lb.-mole

for the temperature and concentration inputs respectively. These frequencies were simply chosen to be of the same order of magnitude as the frequency of the noise used by West [W2]. The method of digital simulation of these gaussian disturbances is explained in Appendix D. Sensitivity to frequency variations will be investigated later.

Inputs and outputs are converted into perturbation variables yielding zero value steady state signals. The resulting deviation variables are defined as follows:

$$\left.\begin{aligned} y_1(t) &= X(t) - X_o \\ y_2(t) &= T(t) - T_o \end{aligned}\right\} \text{ output vector, } y(t) = [y_1(t), y_2(t)]^T$$

$$\left.\begin{aligned} m_1(t) &= Q(t) - Q_o \\ m_2(t) &= Q_c(t) - Q_{co} \end{aligned}\right\} \text{ command vector, } m(t) = [m_1(t), m_2(t)]^T$$

$$\left.\begin{aligned} u_1(t) &= T_i(t) - T_{io} \\ u_2(t) &= X_i(t) - X_{io} \end{aligned}\right\} \text{ disturbance vector, } u(t) = [u_1(t), u_2(t)]^T$$

With these definitions, the nonlinear system equations (4.1) and (4.2) are expanded in Taylor series to yield the linearized system model of Chapter I,

$$\begin{aligned} \dot{y}(t) &= By(t) + Cm(t) + Du(t) \qquad (1.1) \\ q(t) &= Ay(t) \end{aligned}$$

where elements of system parameter matrices A,B,C, and D are defined in Table 4.c. Evaluating these matrix elements

at the system parameter values of Table 4.b results in the following system matrices:

$$A = \begin{bmatrix} 1 & 0 \\ 0 & 1 \end{bmatrix}$$

$$B = \begin{bmatrix} -.010372 & -.000057077 \\ 1.7907 & -.025498 \end{bmatrix}$$

$$C = \begin{bmatrix} 0.0025900 & 0 \\ -.28000 & -.53680 \end{bmatrix}$$

$$D = \begin{bmatrix} 0 & .00500 \\ .00500 & 0 \end{bmatrix}$$

A quick glance at B reveals two left-half plane poles for the free, undisturbed linear system so that the corresponding nonlinear system is stable at least in the near vicinity of the prescribed operating point. However, as will be seen

Table 4.c

Linear System Parameters

System Matrix Component	Value
B_{11}	$-[A'e^{-E/RT_o} + Q_o/V]$
B_{12}	$-[A'EX_oe^{-E/RT_o}/RT_o^2]$
B_{21}	$-[A'\Delta He^{-E/RT_o}/\rho C_p]$
B_{22}	$-[Q_o/V+UAF_o/V\rho C_p(F_o+1)+A'EX_o\Delta He^{-E/RT_o}/\rho C_pRT_o^2]$
C_{11}	$(x_{io} - x_o)/V$
C_{12}	0
C_{21}	$(T_{io} - T_o)/V$
C_{22}	$2\rho_cC_c(T_c - T_o)/V\rho C_p[F_o+1]^2$
D_{11}, D_{22}	0
D_{12}, D_{21}	Q_o/V
A_{ij}	δij
F_o	$2Q_{co}\rho_cC_c/UA$

from later simulations, input disturbances provoke an instability in the system at this operating point which ultimately results in a new steady state. The control schemes of the next two sections will attempt to minimize the effects of such disturbances and permit operation at this unstable steady state.

Implementation of Noninteracting Control Scheme

The interacting control scheme utilized in this dissertation does not attempt to eliminate any system interrelations. This being the case, there is a need for only regulating controllers, not decoupling compensators of any type. The feedforward-feedback controllers are merely applied to the interacting system as illustrated in Figure 1.a.

Things are not so simple, however, in the implementation of a noninteracting control scheme. In the technique considered here, the system must first be uncoupled. This done, conventional controllers are applied to the resulting univariant subsystems. This section should further clarify just how these objectives are accomplished.

The first step is to partially decouple the system by eliminating the effects of coolant and reactant flow rate variations upon the output concentration and temperature, respectively. Further, the effects upon both outputs of input concentration variations are suppressed. Thus, the output functionality is affected such that $y_1 = y_1(x_1,x_3)$ and $y_2 = y_2(x_2,x_3)$. To accomplish this decoupling by the

internal feedback elimination method of Foster and Stevens the system must be transformed mathematically to the V'-canonical structure. This requires the introduction of a "virtual" output y_4 so that the inputs may be converted to outputs and fed back internally. Mathematically, a "virtual" system is adjoined to the "real" system in its P-canonical form as shown in Figure 4.c to generate this new output.

Now that we have a sufficient number of outputs, the V'-canonical form of the internal structure may be constructed. Such a construction is illustrated in Figure 4.d. From this illustration, it is obvious how to achieve the desired uncoupling. The interactions are represented now as internal feedback signals which may be simply cancelled by identical external feedback signals. The addition of the external decoupling compensators is depicted diagrammatically in Figure 4.e. Applying these same controllers to the system in its equivalent P form illustrates the implementation of the decoupling controllers onto the original interacting system. This configuration is shown in Figure 4.f.

Determination of the form of the decoupling controllers has now been reduced to finding the form of the system interactions V_{12}, V_{21}, V_{14}, and V_{24}. The equations for these terms coincide with equations (B-19) and (B-20). For this system, they are as follows:

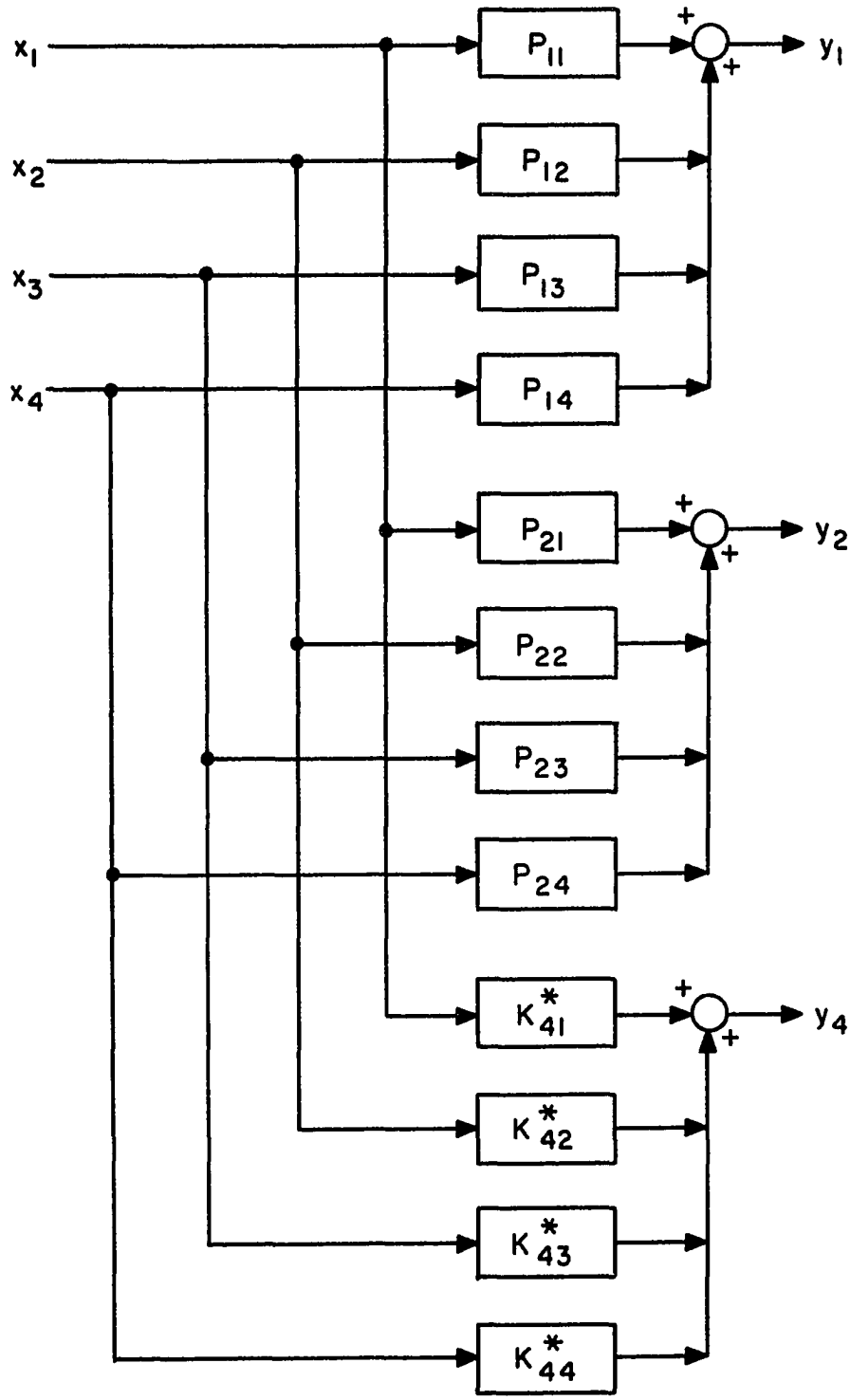

Figure 4.c

Real and Virtual System Adjoinment in P-canonical Form

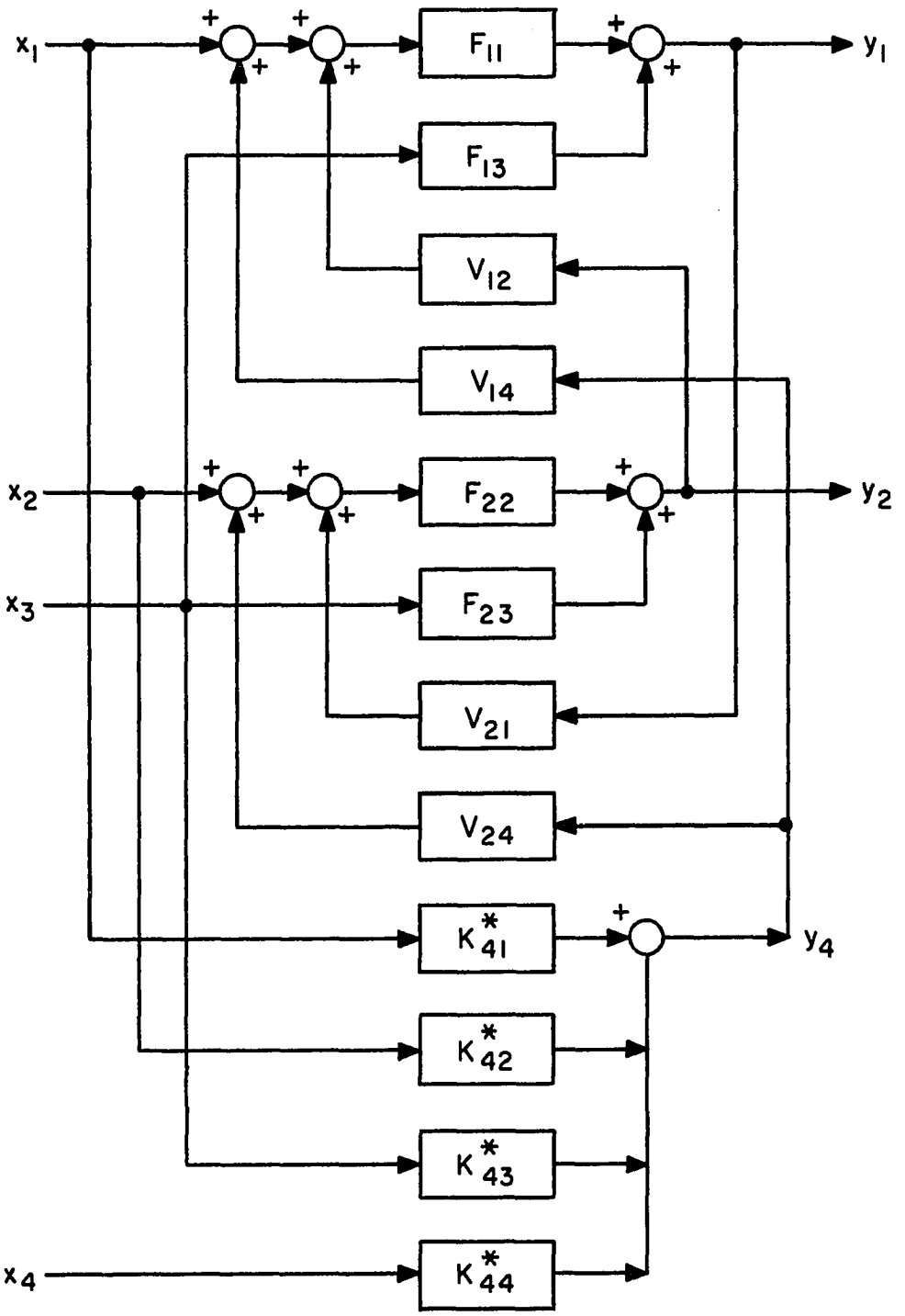

Figure 4.d

V'-canonical Structure Illustrating Internal Feedback Signals

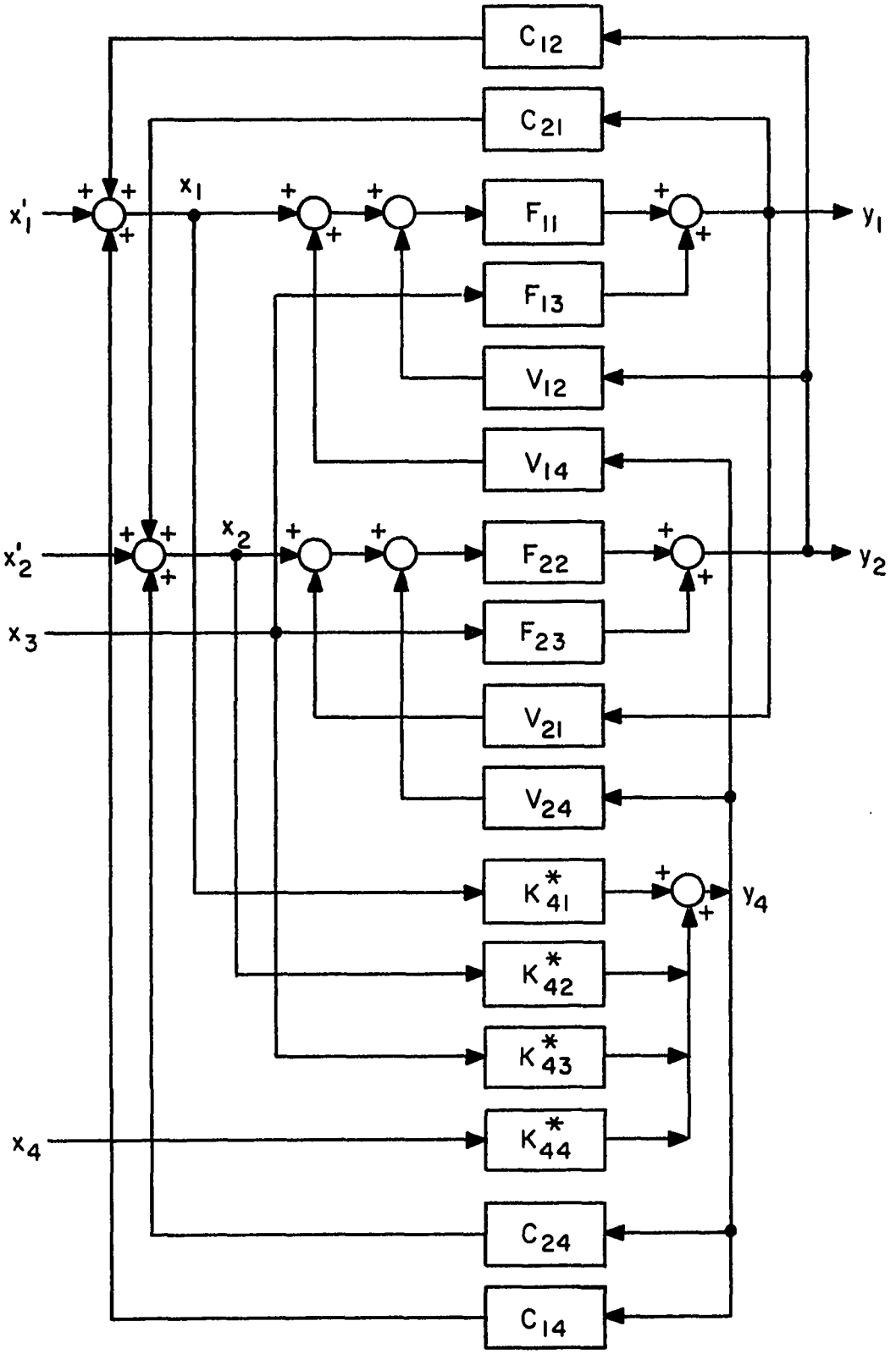

Figure 4.e

V'-canonical Structure of System with Decoupling Controllers

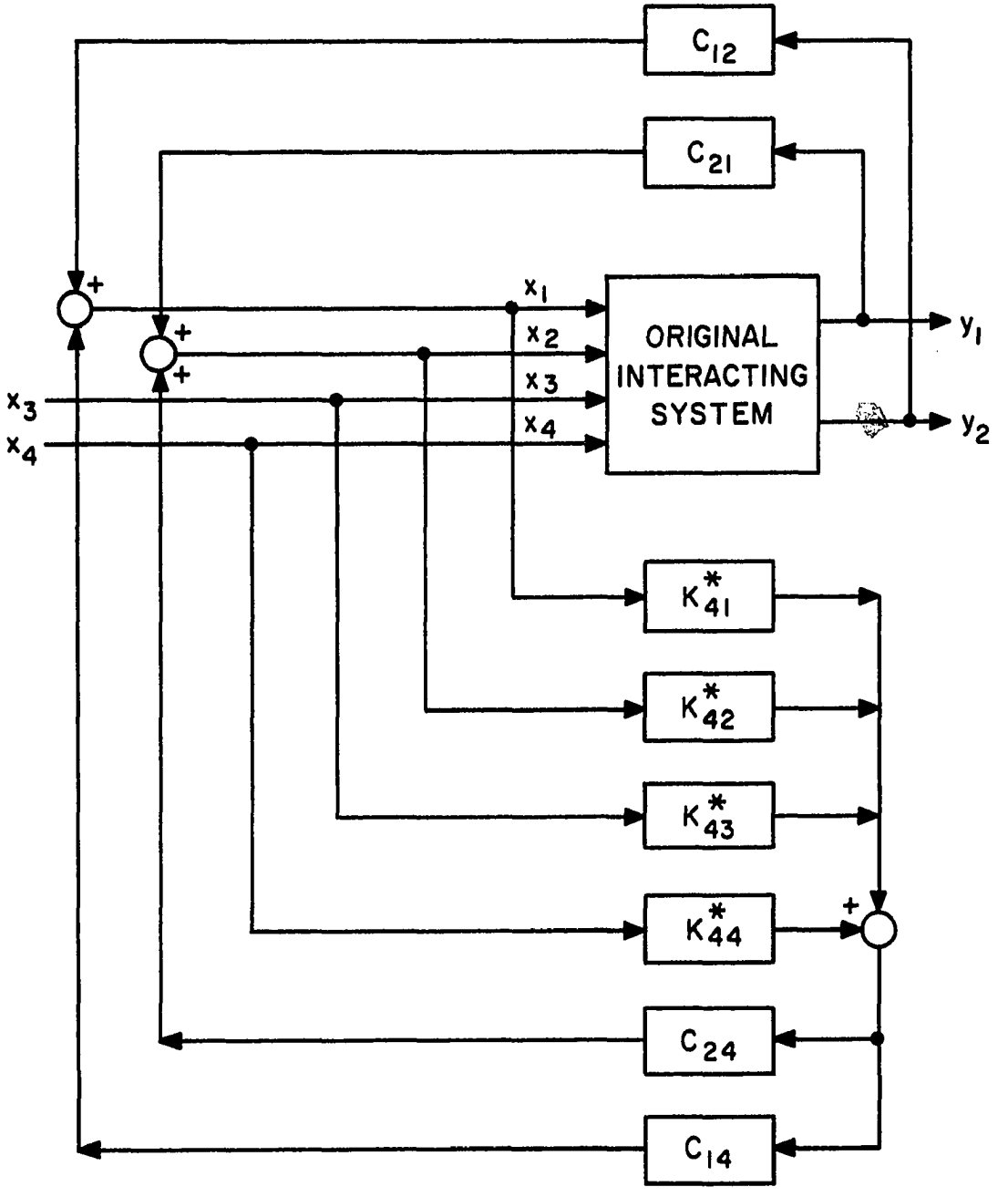

Figure 4.f

Application of Decoupling Controllers to Interacting System

$$C_{12} = -V_{12} = \frac{K_{14}K_{42}^{*}S - [K_{22}K_{44}^{*}N_{12} + K_{14}K_{42}^{*}N_{22}]}{J_{33}} \quad (4.3)$$

$$C_{21} = -V_{21} = \frac{-K_{21}K_{44}^{*}S - [(K_{11}K_{44}^{*} - K_{14}K_{41}^{*})N_{21} - K_{21}K_{44}^{*}N_{11}]}{J_{33}} \quad (4.4)$$

$$C_{14} = -V_{14} = \frac{K_{14}K_{22}}{J_{33}} \quad (4.5)$$

$$C_{24} = -V_{24} = \frac{-K_{14}K_{21}}{J_{33}} \quad (4.6)$$

where, from the definition in the notation section,

$$J_{33} = K_{11}K_{22}K_{44}^{*} - K_{14}K_{22}K_{41}^{*} + K_{14}K_{21}K_{42}^{*}. \quad (4.7)$$

The forms of F_{11}, F_{13}, F_{22}, F_{23} may be found from equations (B-16) thru (B-18). Since the K_{4j}^{*} are simply arbitrarily selected constants, they along with C_{24} and C_{14} are merely feedforward amplifiers. From (4.3), (4.4), and Figure 4.f, C_{12} and C_{21} are seen to be feedback proportional plus derivative controllers.

Closer examination of Figure 4.e reveals that it may now be represented as in Figure 4.g, two partially noninteracting subsystems. Complete noninteraction and system stability is effected by the application of a feedforward and a feedback controller to each subsystem as in Figure 4.h. The system configuration at this point is that of Figure 1.b in Chapter I. It can be easily verified from Figure 4.h that the equation for the outputs is as follows:

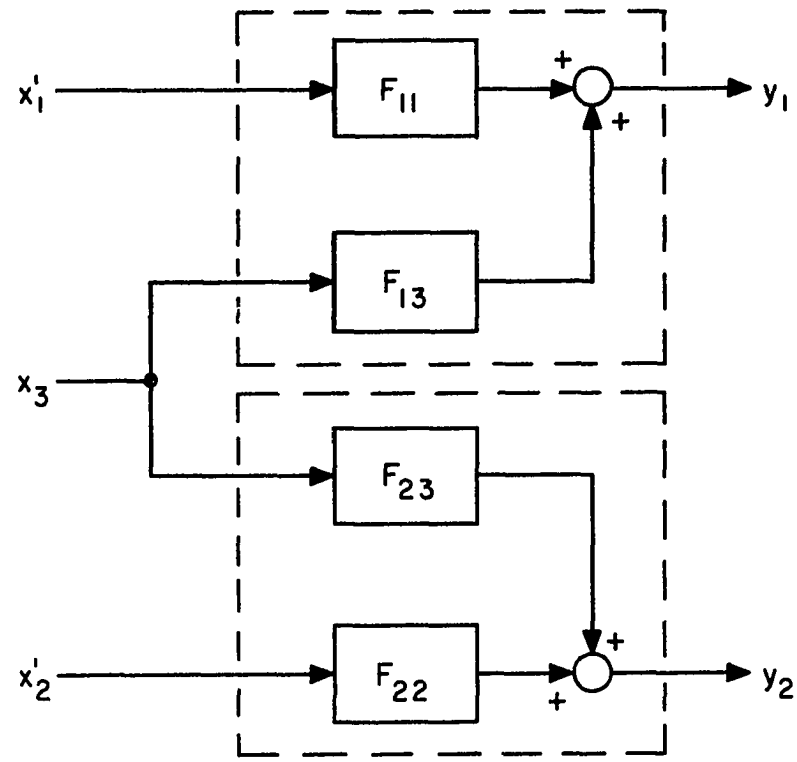

Figure 4.g

Two Partially Noninteracting Subsystems Resulting from the Application of the Decoupling Controllers

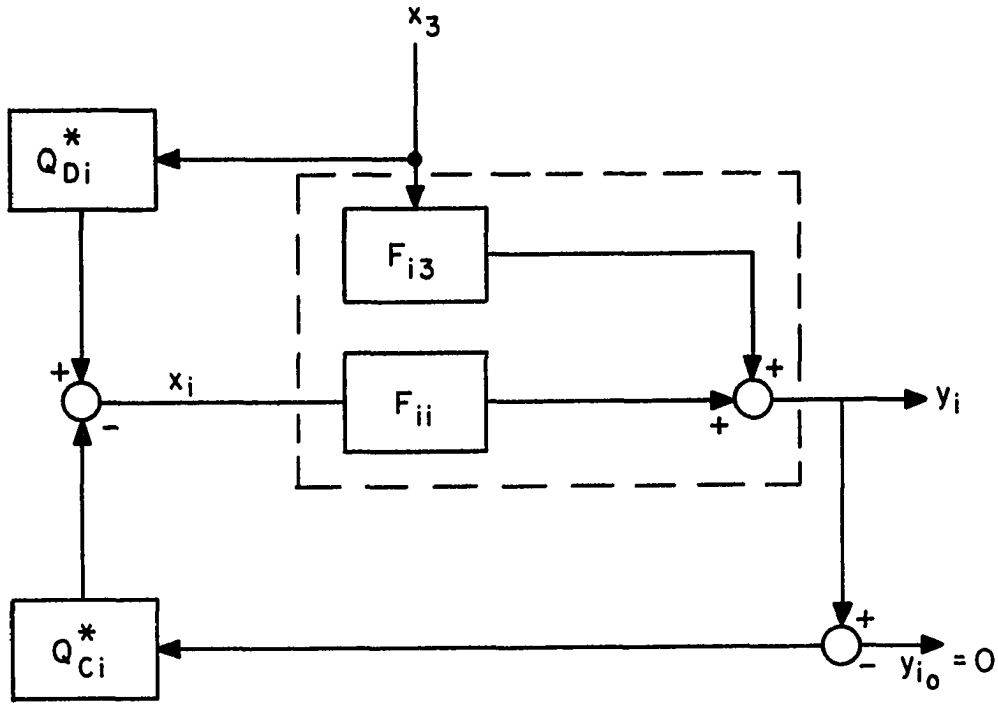

Figure 4.h

The ith Subsystem with Feedforward and Feedback Controllers Added

$$y_i = \frac{(F_{i3} + F_{ii}Q^*_{Di})}{1 + F_{ii}Q^*_{Ci}} x_3 \qquad (4.8)$$

The feedforward controllers are chosen to make the numerator of (4.8) vanish yielding complete decoupling. The forms of F_{11}, F_{22}, F_{13}, and F_{23} are such that these controllers are simply amplifiers:

$$Q^*_{Di} = \frac{J_{3i}}{J_{33}} \qquad (4.9)$$

where $J_{31} = K_{14}K_{22}K^*_{43} - K_{14}K_{23}K^*_{42}$ (4.10)

and $J_{32} = K_{14}K_{23}K^*_{41} - K_{14}K_{21}K^*_{43} - K_{11}K_{23}K^*_{44}$ (4.11)

Conventional PID controllers are used for the feedback compensators with the parameters adjusted so that the denominator of equation (4.8) has no right-half plane zeros, thus assuring subsystem stability. The reader is referred to Foster [F4] for the method of determining controller parameters from a consideration of desired output responses to step changes in input signals.

Digital Simulation of Control System Configurations

The continuous flow stirred-tank reactor was simulated by the use of the System/360 Continuous System Modeling Program. Simulation has been used for some time in studying the dynamic behavior of complex engineering processes and systems. Most of these dynamic systems are continuous in nature and have been in the past simulated on

analog computers. But as the dimensionality and complexity of the systems under consideration become greater, the need is toward the accuracy and flexibility of the digital computer. CSMP helps meet this need.

Three systems were simulated using CSMP. First, the free nonlinear reactor was programmed to verify the steady states given and to observe the effects of input disturbances on these states. Second, the nonlinear system was fitted with the feedforward and feedback controllers specified by the dynamic programming optimization technique. Third, the nonlinear system was equipped with the controllers determined by the noninteracting control technique. These last two programs were utilized extensively in the investigation. The mean output state deviations and mean control state deviations were monitored by the programs as the sensitivity to control parameter variations was observed. These CSMP programs were used at every stage of the investigation which follows. The GE-400 series time-sharing terminal was used in the calculation of the dynamic programming control parameters. All programs used appear in Appendix F of this dissertation.

Disturbance Inputs

For the purpose of comparison of the performance of a number of control systems, it would be advantageous to have an identical set of load disturbance inputs present

in each system. If the same disturbances are irritating all concerned systems, one can better judge the quality of control obtained by the manipulated inputs from one system to another. However, if the measurable inputs are truly random, then by the very nature of random signals, they cannot be generated repeatedly in the same forms. The output from the simple RC filter described in Appendix D is computed analytically and, hence, can be reproduced at will. The resulting "pseudo"-random signals exhibit a statistical nature in line with the desired input forms. These signals will be used as disturbance inputs to the control systems considered.

The physical system variables functioning as load disturbances for the systems considered are reactant temperature and concentration. The descriptive parameters for the disturbances are given in Table 4.d.

Table 4.d. Input Disturbance Parameters

	Mean	Standard Deviation	Frequency
Temperature Disturbance	690. ^{o}R	1.0%	1.5 radians/sec.
Concentration Disturbance	0.5 lb.moles/ft^3	0.5%	1.0 radians/sec.

Portions of these disturbances are shown in Figure 4.i. Identical noise signals are to be assumed throughout the simulations unless otherwise specified. Hence, they need

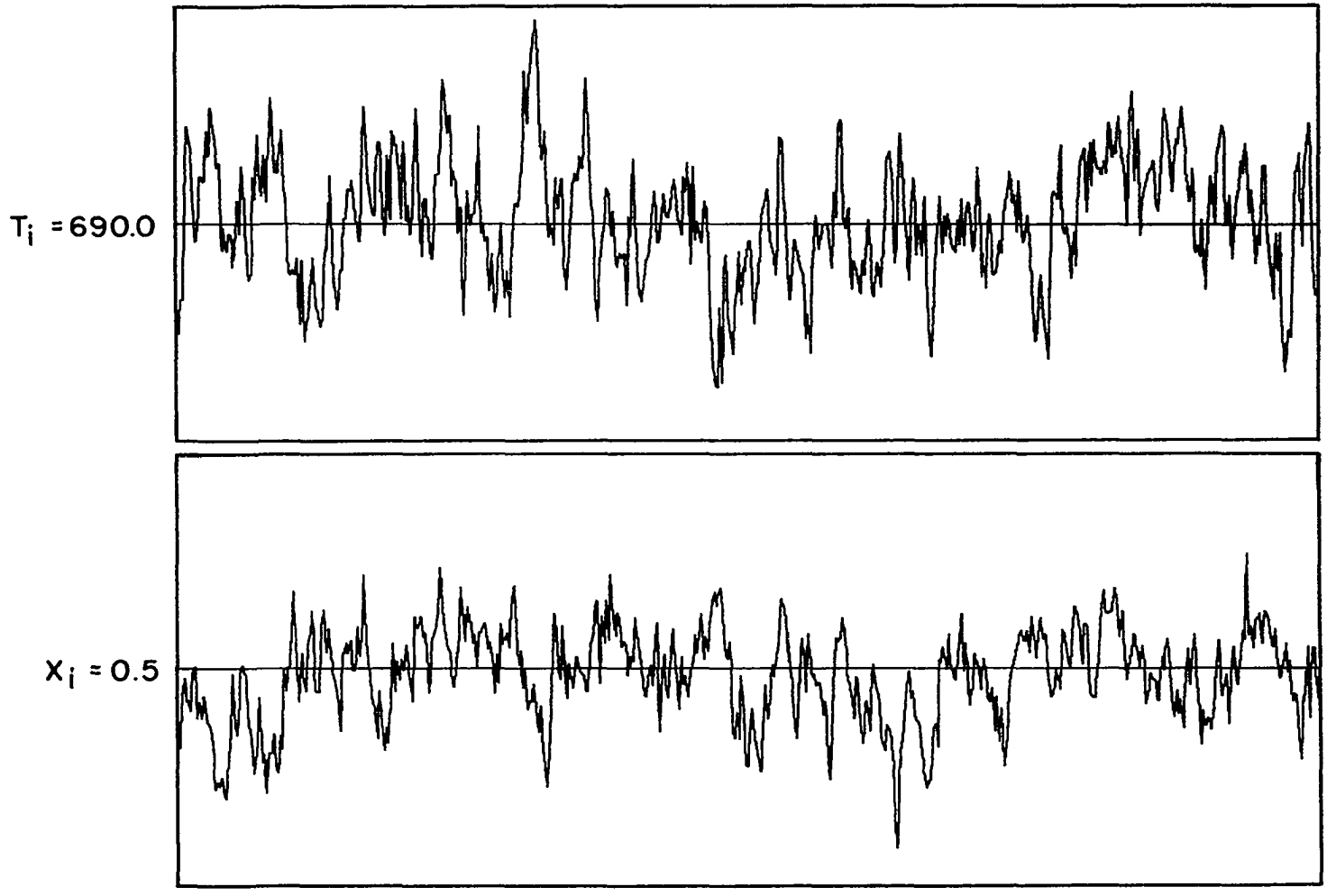

Figure 4.i

Samples of the Gaussian Input Disturbances

only appear this one time for visual examination. Where the results of a simulation run are to be presented, only the command and output signals will be shown.

Uncontrolled System Stability

The chemical reactor model used in these simulations has three steady states. An explanation for the existence of these states is given at the beginning of this chapter where general heat generation-removal curves were illustrated. The actual curves for the reactor are now shown in Figure 4.j. From this plot it can be seen that the system possesses stable steady states in the neighborhoods of (T,X) = (658.8 ^{o}R, 0.4984 lb.-moles/ft^{3}) and (764.8 ^{o}R, 0.05916 lb.-moles/ft^{3}). This simply means that if the reactor is disturbed while operating near one of these states, the system will have no tendency to venture off to a new steady operating state, but rather will return in time and in the absence of new disturbances to the original operating state.

If, however, operation is attempted at the interior steady state without the benefit of a competent control scheme and in the presence of load disturbances, the unstable nature of this operating state soon becomes apparent. The system will move rapidly to one of the other steady states depending upon the nature of the initial disturbances. This unstable point occurs for this system at (718. ^{o}R, 0.24102 lb.-moles/ft^{3}. To further test the

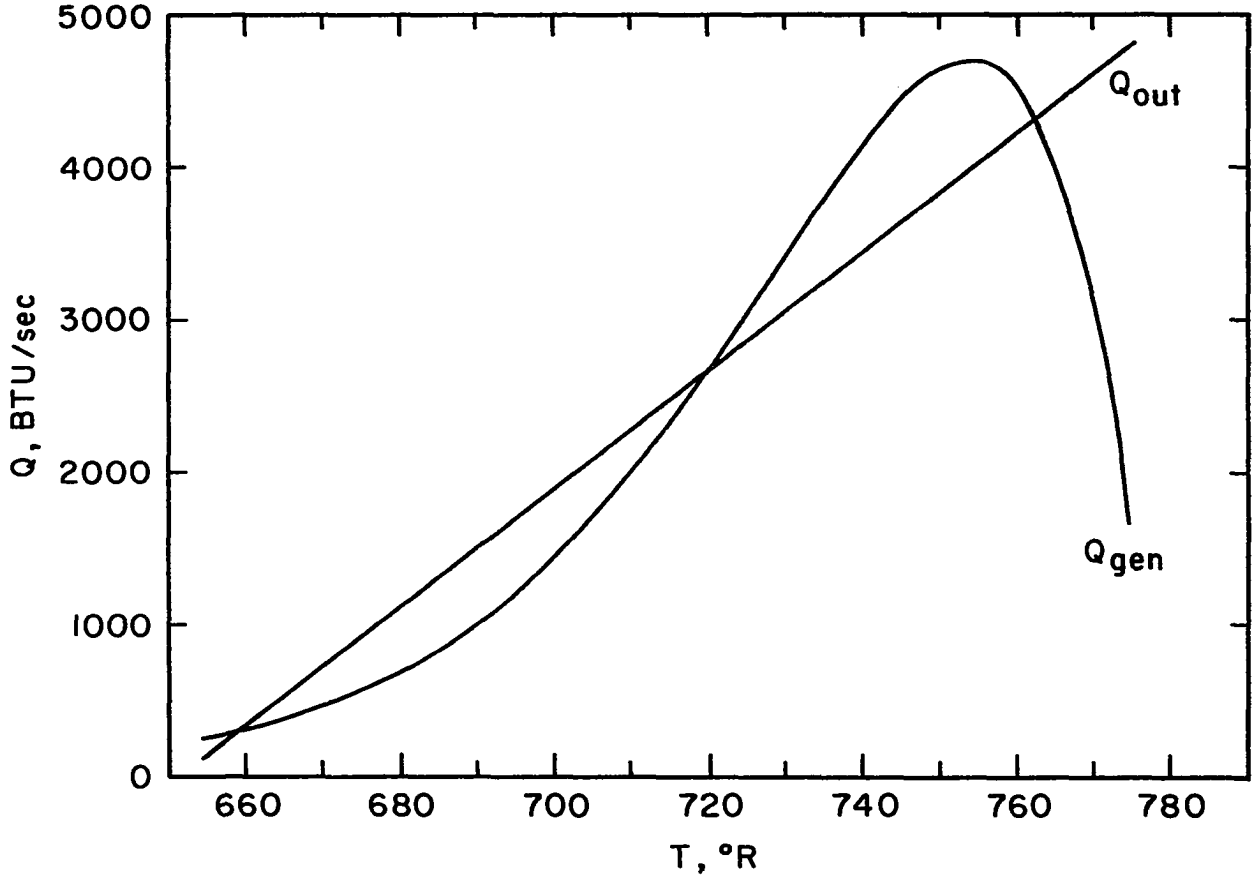

Figure 4.j

Heat Rate Curves for Reactor Considered

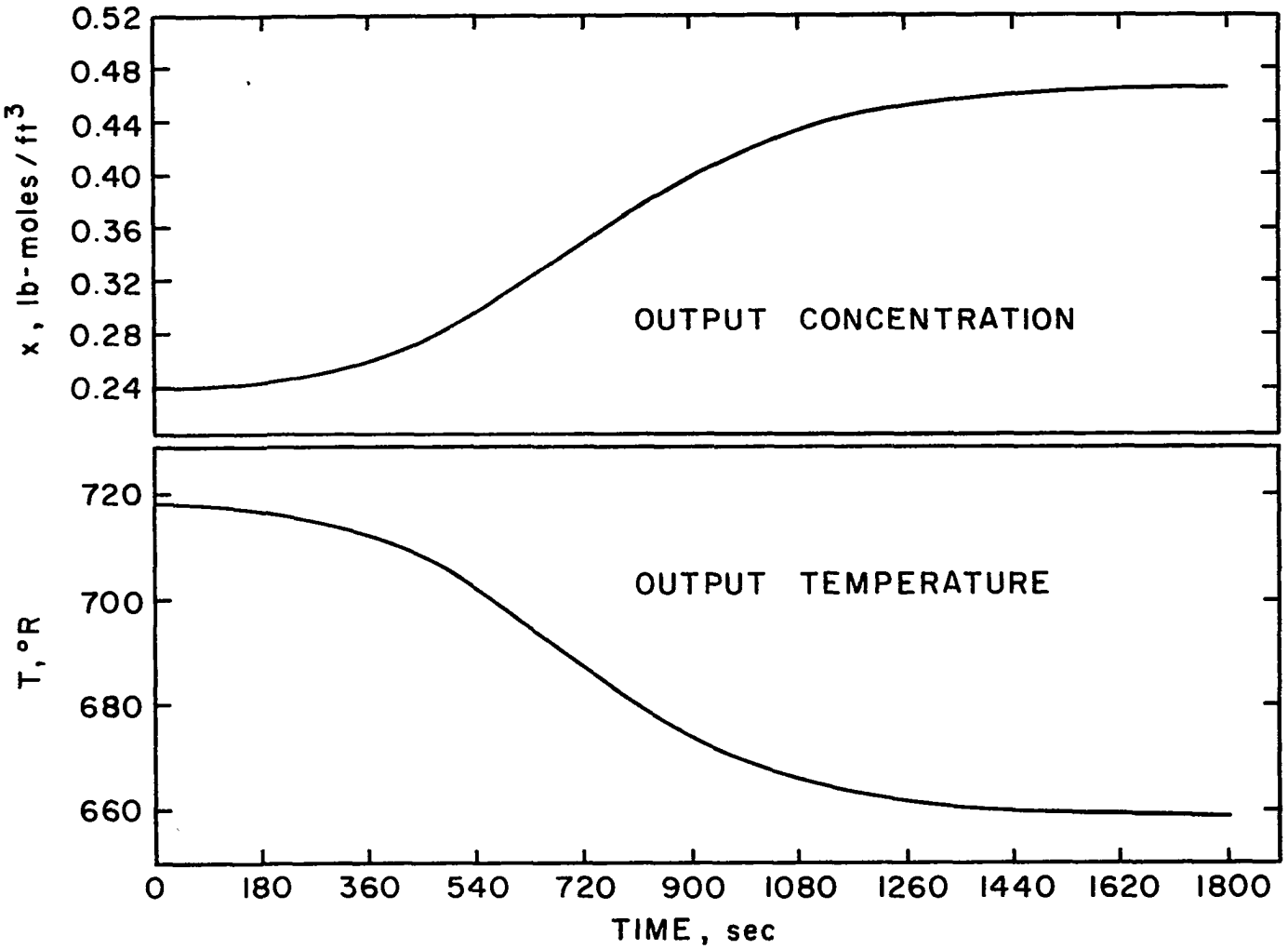

Figure 4.k

Dynamic Response of Reactor Outputs to Input Disturbances

control schemes, the reactor will be operated throughout each simulation at this unstable steady state. The controllers will serve to stabilize the system at this state while attenuating the output responses to the disturbances.

The dynamic response of the reactor to the input disturbances of Figure 4.i is shown in Figure 4.k. The initial negative perturbation in the input temperature prompts a decrease in the reactor temperature and a corresponding increase in the reactor concentration. These changes are propagated by the imbalance in the heat rates as discussed earlier.

The Roles of Q and Q_c in the Control System

In order to understand the mechanism of system stabilization and control in the given chemical reactor control system, it is expedient to consider the heat rate curves once again. We are reminded from Figure 4.j that the chemical reactor is attempting operation at an unstable point. Thus, the material and coolant flowrate control variables, Q and Q_c, respectively, have not only the role of output regulation, but also of stabilizing a previously unstable chemical reactor.

Consider the energy equations which produce the heat rate curves.

$$Q_{gen} = A'VXe^{-E/RT}\Delta H \tag{4.12}$$

$$Q_{out} = [Q_\rho C_p + UA]T - [Q_\rho C_p T_i + UAT_{c_m}] \tag{4.13}$$

As the concentration X and temperature T are being controlled, the shape and position of the Q_{gen} curve will not change significantly. However, the slope and heat intercept of the Q_{out} line will vary directly with Q. The intercept will also vary indirectly with Q_c as a result of the functional relationship between the mean coolant temperature, T_{c_m}, and Q_c. The effect of the prudent manipulation of both Q and Q_c is the shifting of the Q_{out} line to a position in which its slope exceeds that of the Q_{gen} curve at the operating point. The shift is illustrated in Figure 4.1(a). The reactor is now stable to input disturbances. From equation (4.13) we see that the change in slope is due solely to a manipulation of the material flow rate. Hence, even in cases where a large penalty factor is used for Q_c, this manner of stabilization is still possible. However, Q alone must now shoulder the bulk of the responsibility for output regulation as well as stabilization. Reducing the penalty on the use of Q_c releases Q from some of the burden.

On the other hand, placing a high penalty on the use of Q forces Q_c to take on more of the task of stabilization. If this is carried to its extreme, the manner of stabilization must change. Equation (4.13) tells us that we can now change only the heat intercept. This shifts the Q_{out} line perpendicularly as in Figure 4.1(b). If an input disturbance causes a perturbation in the reactor temperature, the controllers will attempt to produce a Q_c control manipulation which would, in effect, shift the unstable point of the

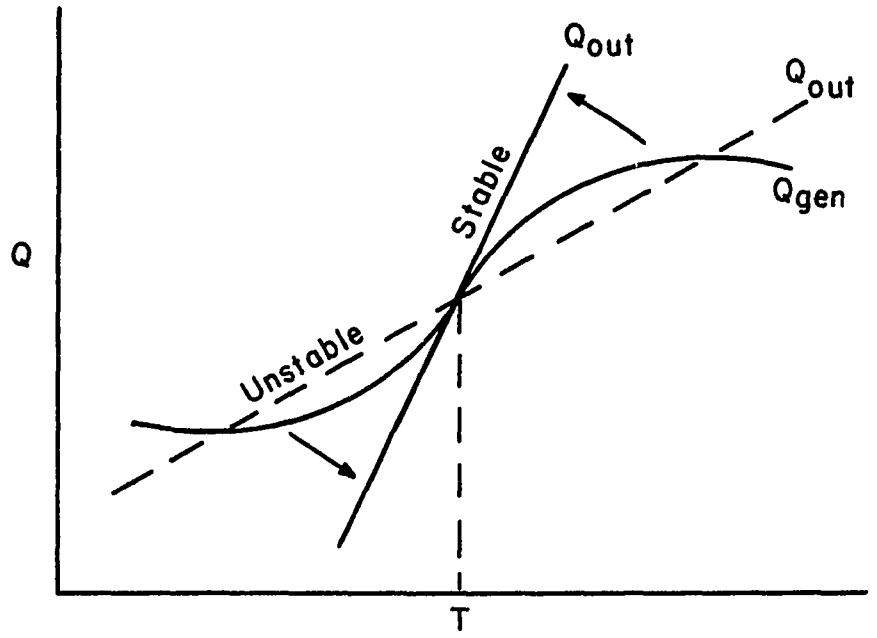

(a) Q USED FREELY

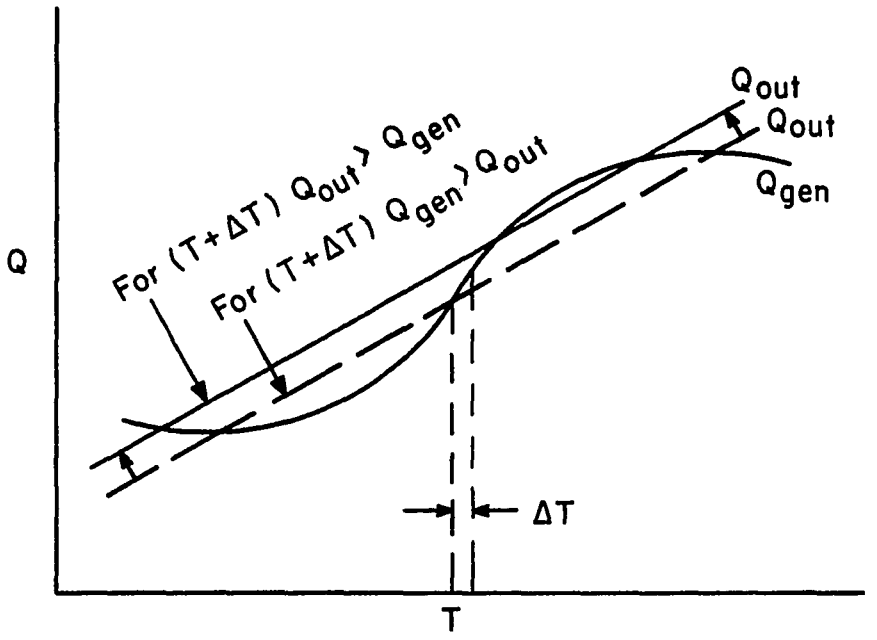

(b) Q HEAVILY RESTRICTED

Figure 4.1

Effects of System Stabilization

reactor by changing the heat intercept of equation (4.13). For the positive perturbation of Figure 4.1(b) the reactor now experiences a higher rate of heat removal than heat generation and the temperature begins to decrease instead of increasing to the higher stable operating state.

These are the mechanisms of stabilization for the reactor control system. Whether a given control configuration can handle the stabilization and control of the reactor remains to be seen.

Mean Deviation Time Dependence

The mean control and output state deviations were defined in the latter parts of Chapter III. The definitions are shown again here for the sake of discussion.

$$\overline{OSD} = \frac{1}{T} \int_0^T [\pi_1^2 y_1^2 + \pi_2^2 y_2^2]^{1/2} dt \qquad (3.7)$$

$$\overline{CSD} = \frac{1}{T} \int_0^T [\gamma_1^2 m_1^2 + \gamma_2^2 m_2^2]^{1/2} dt \qquad (3.8)$$

These mean deviations are analogous to the MSQ output and MSQ control values as calculated by equation (3.6). Given the system parameters and the input disturbance statistical parameters, the MSQ values could be calculated analytically. We discussed in Chapter III the fact that this calculational procedure becomes infeasible for multivariable systems or,

at least, for systems with more than one disturbance input. Thus, we reverted to the means of equations (3.7) and (3.8). The direct calculation of these mean deviations would require analytical time domain representations for the outputs and control variables. Unfortunately, this would require deterministic equations for the input disturbances. Since these load variables are gaussian random signals, no such deterministic equations exist. Consequently, the mean control and output state deviations must be calculated from the dynamic responses of the real or simulated process under consideration.

Now that we have determined how the mean deviations are to be calculated, another problem arises. It is concerned with the fact that the outputs and control variables are dependent upon the random load disturbances. Hence, the mean deviations themselves are indirect functions of random variables. As such, we need to be concerned with the time interval T for which the means are to be determined. This interval must be long enough to yield a representative sample of the outputs and control variables. The following section will attempt to determine experimentally a value for this time interval.

It might be instructive to consider the time constants for the reactor. Because of the linearity with respect to the concentration in the differential equation for the reactor concentration, its time constant can be easily seen to be

$$\tau_x = V/(Q + k(T)V). \qquad (4.14)$$

A heat balance over the reactor quickly yields the temperature time constant

$$\tau_T = V\rho C_p/(Q\rho C_p + UA - \partial Q_{gen}/\partial T) \qquad (4.15)$$

where the heat generated by the reaction, Q_{gen}, is given by

$$Q_{gen} = A'VX(-\Delta H)e^{-E/RT}. \qquad (4.16)$$

Evaluation of these constants at the desired operating states produces a major time constant of τ_X = 96.2 seconds and a minor time constant of 39.7 seconds. Since we are dealing here with an assumed perfectly-mixed reactor, these time constants really indicate very little. The most we can hope for is that the final effects of an upset in an input stream will be observed in the outputs after a period of time equaling only a few major time constants.

In order to help determine this period of time, I have chosen arbitrary sets of controllers with either interaction or noninteraction capabilities and applied them to the control of the reactor. Samples of the results of these simulations are shown in Figures 4.m and 4.n. The dynamic behavior of the mean output and control state deviations are illustrated in these figures.

The mean control state deviations for both the interacting and noninteracting control systems reach steady state

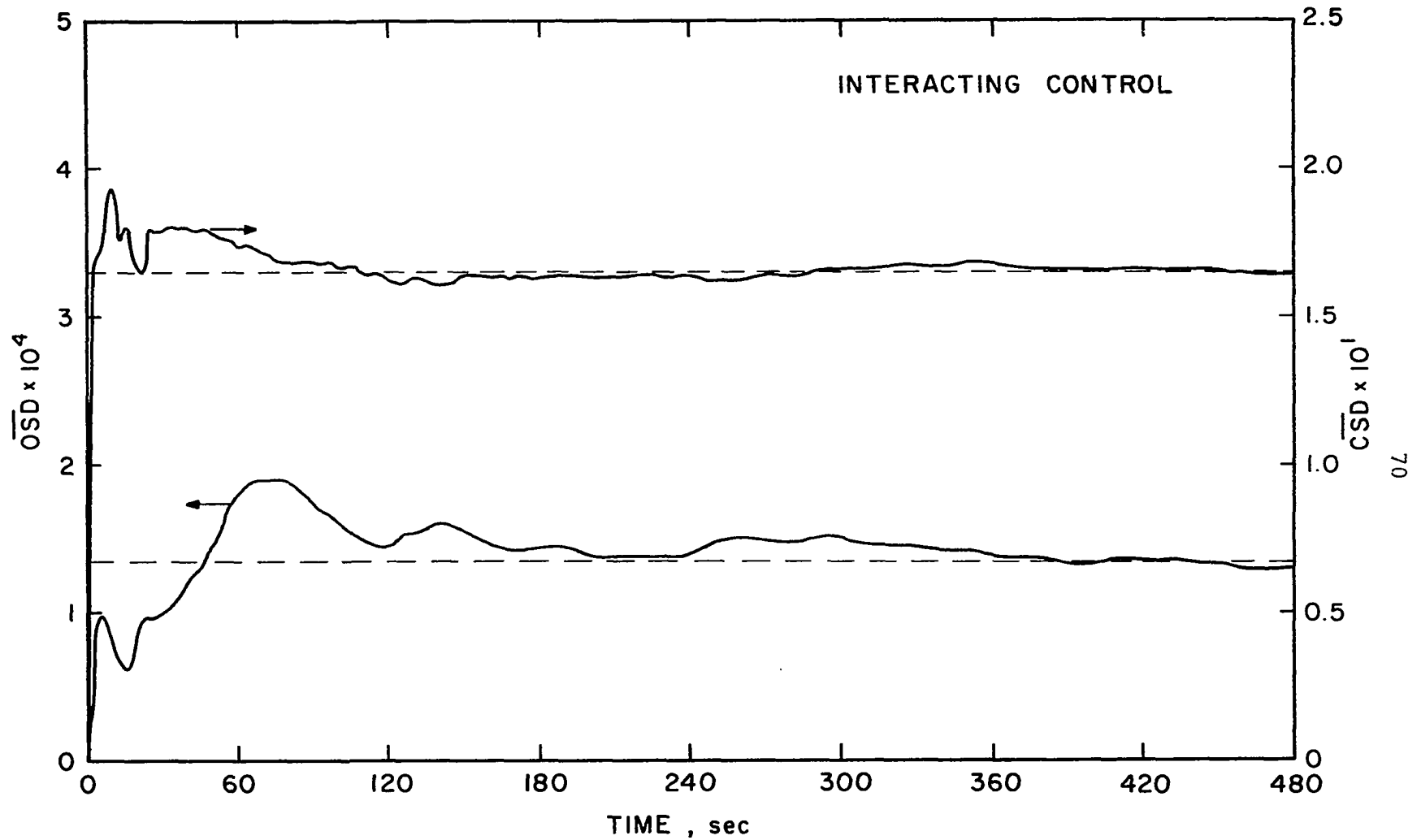

Figure 4.m
Dynamic Behavior of Mean Control State Deviation

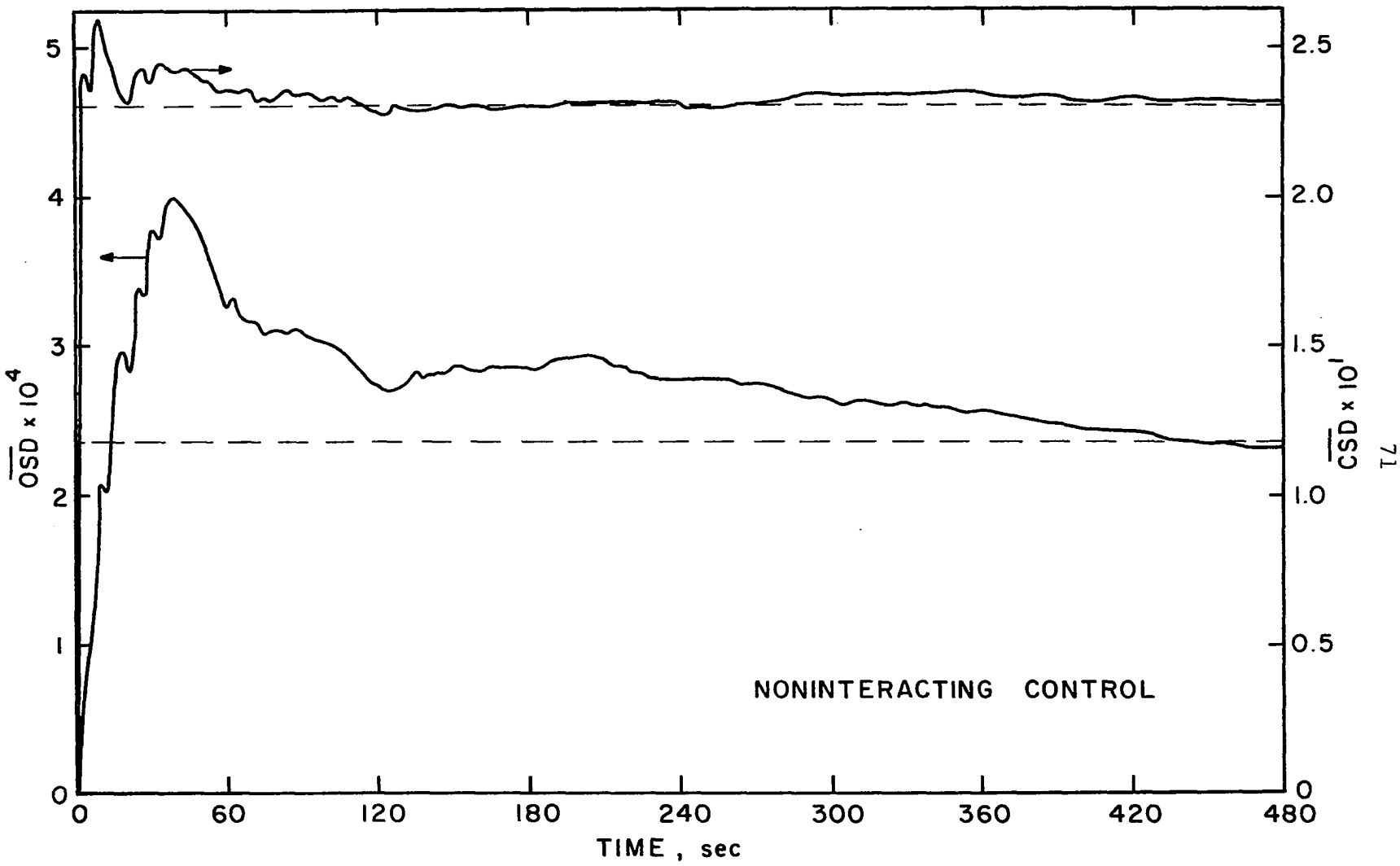

Figure 4.n

Dynamic Behavior of Mean Output State Deviation

values for all practical purposes after only two minutes, about one major time constant. The mean output state deviations, however, require a period of time extending over five major-time constants to level out at a near-steady value. The mean output state deviation, $\overline{OSD}$, does approach its eventual steady state to within about 7 percent for the noninteracting control system. So we could get ball-park estimates of the mean output and control state deviations by allowing the simulation to proceed at least one major time constant of process time. A very good estimate of the control state deviation can be obtained by such a simulation, however, the output deviation would be somewhat larger than its true steady-state value. Further, the comparison would be biased in favor of the interacting control system.

It appears from these results that the simulations must be continued for about eight minutes of process time in order to obtain good average deviations. However, shorter runs may be made keeping in mind the distortion in the average output deviations. There will be little error in the average control deviations for considerably shorter runs.

Control System Performance

The mean control state deviation as defined in equation (3.8) can only in certain instances be regarded as a measure of the control effort, that is, the energy expended in

controlling the outputs. In most instances that we will consider, however, it will give a measure of the effort. This is due to the nature of the disturbances considered in this investigation and, hence, the nature of the control signal itself. The randomness of the input disturbances contributes to the production of control signals which are similar in appearance to random signals. Hence, gauging the average deviation of the control state from its steady state should give a measure of the motion and, hence, the effort of the manipulative inputs. However, in situations where the control signals spend a considerable portion of the process time at saturation levels, the mean deviations could be as large as the previous case while actually the motion or effort of the control signals was relatively small. In this case one would get a poor indication of the control effort by the use of (3.8). In summary, one must be careful in interpretting the mean control state deviation as control effort.

With these thoughts in mind we now consider a performance chart. Figure 4.0(a) illustrates the control deviation as a function of the output error. The various interacting control curves trace out the change in the measures for constant values of the material flowrate penalty factor while continuously varying the coolant flowrate penalty. The uppermost curve corresponds to the noninteracting control system for differing feedback gain

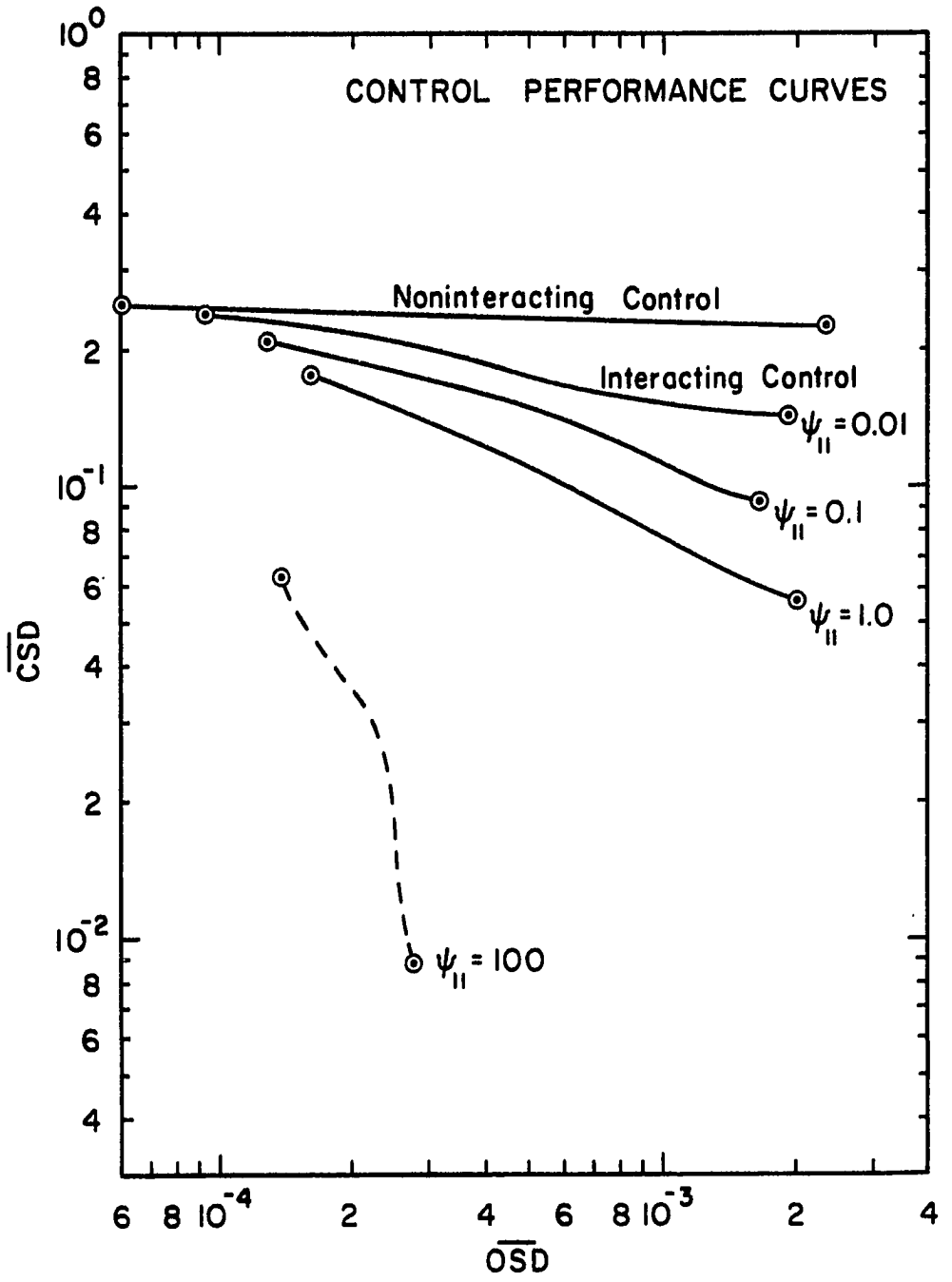

Figure 4.o.(a)

Control Performance Curves

vectors. The remaining noninteracting control parameters were held at the values given by Foster [F4]. As one advances to the left along the decoupled control curve the feedback gains increase causing a corresponding decrease in the system output error. An examination of the curve shows that the selection of the control parameters was very good as evidenced by the efficiency of the control system. An increase in the feedback gains produces a large decrease in the output error with only a small increase in the average deviation of the control state. In most cases, points on the noninteracting control curve were obtained by using equal feedback gains for the generation of the material and coolant flowrate control signals. Unequal feedback gains as well as perturbations in the other control parameters were also implemented. All the points fell along this curve provided they did not produce instability in the control system or produce controllers which were otherwise unable to control the reactor at its unstable point.

The four curves shown below the decoupled control curve are arbitrary interacting control graphs. The curves were obtained using an identity weighting matrix ϕ. This matrix weights errors in the output variables X (concentration) and T (temperature). Using such a ϕ obviously weights errors in T very heavily producing compensators which control T very tightly while essentially ignoring

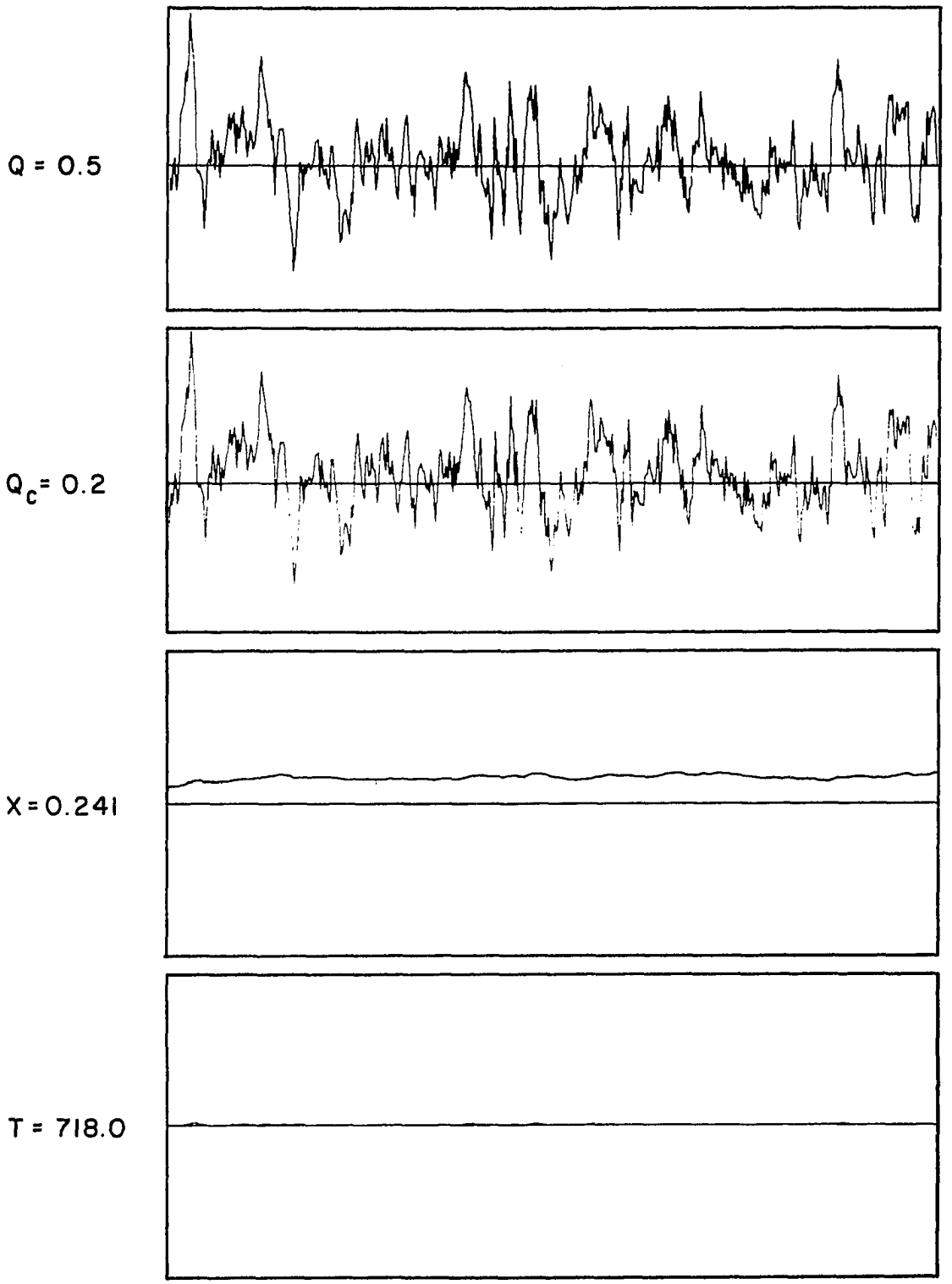

Figure 4.o.(b)

Outputs and Command Inputs for Temperature Controlled Reactor

variations in X. The output forms are shown along with the control signals in Figure 4.o(b). Notice the identical shapes of the two control signals. They have been scaled proportionately to illustrate that their efforts are directed solely to the control of the reactor temperature. Hence they show the same form in their efforts to cancel input disturbance effects and regulate the temperature. Good control of the temperature is realized while the concentration in the reactor experiences poor control and some offset. Offset can occur due to the fact that deviations in the concentration variable are ignored. The technique for balancing the weighting factors will be shown later. The dashed curve nearest the bottom of the figure represents $\psi_{11} = 10^2$. The symbol ψ_{11} is the penalty factor for use of the material flowrate as a control variable. Considering the unity weighting factors on the outputs and the relative magnitudes of the outputs and the control variables, such a ψ_{11} should serve to suppress the use of the material flow as a control signal. Consequently, for the larger ψ_{22}'s the performance curve should tend to produce a smaller deviation in the control state than the other illustrated interacting control curves. This suspicion is verified by the relative position of the curve. However, the slopes of the curves imply that the controllers resulting from the specification of control parameters corresponding to the lower curve are less efficient in their efforts to control than controllers

corresponding to the higher curves. Efficiency is taken here to mean the relative increase in control state deviation for a corresponding decrease in the output error. One should notice too that the former controllers are operating exclusively at a lower level of output error.

Decreasing the penalty on Q manipulation serves to shift the performance curve nearer to a horizontal position. Accompanying the shift is an increase in efficiency and control state deviation and an overall worsening of the output control quality. The higher curves represent $\psi_{11} = 10^{0}$, 10^{-1}, and 10^{-2} isograms. It appears that for a curve with ψ_{11} equal to about 10^{-3}, the interior portion of the interacting control performance curve will closely approximate the noninteracting control curve for some set of decoupling control feedback gains. This signals the end of a region wherein the interacting control system could produce a specific output error with less control deviation than that required for the noninteracting control configuration. Such a region parallels Mesarovic's "proper interacting domain" in which the interacting control performance index is less than the corresponding index values for the decoupled control case.

This illustration shows that for the particular control configurations considered the interacting controllers produced by the application of dynamic programming optimization can control the reactor equally as well and with less deviation in the control state than the noninteracting controllers

operating on an identical system. This was true despite the fact that an apparently-poor choice was made for the output weighting matrix ϕ. Later we will see what will happen with controllers produced by the specification of a well-balanced matrix ϕ. It should be pointed out that the curves of Figure 4.0 were generated for a terminal time of one minute. Referring back to the section on the time dependence of the average deviations, we recall that the mean control and output state deviations, $\overline{CSD}$ and $\overline{OSD}$, values will actually be somewhat smaller. However, the percentage errors are about the same for both control configurations so that the results of this section are perfectly valid. This fact will be verified in later sections of this investigation.

The values of ψ_{22}, the penalty factor on the use of the coolant flowrate Q_c as a control variable, vary from a low of about 10^{-3} on the $\psi_{11} = 10^{-2}$ curve to a high value of about 10^{+4} for the $\psi_{11} = 10^{2}$ isogram. The feedback gains of the noninteracting control configuration ranged from .25, below which the restricted effort of the control system is incapable of stabilizing the reactor at its unstable operating point, to 10^{3}, a maximum gain comparable to the largest feedback gain of the interacting controllers. The left ends of the interacting control performance curves correspond to controllers which began to give control variable saturation. We will not consider the case of control saturation at this time. The right ends of the curves

represent the beginning of controllers which are incapable of producing stability in the operation of the control system at this unstable operating state. This is due to the restricted use of the coolant flowrate produced by the increase in the ψ_{22} penalty factor.

Mean Deviations as Functions of Penalty Factor Ratio

In order to further understand the roles of the penalty factors in the specification of the optimal interacting controllers, we will now break down the performance curves of Figure 4.0(a). We have been emphasizing ψ_{22} rather than ψ_{11} because the control system seems to respond better to the use of Q_c as the primary control variable (that is, when Q_c is manipulated more freely than Q) and ψ_{22} is the penalty factor for Q_c. Thus, the dependence on the ψ_{22} penalty is stressed in the following.

Because of the wide range of the penalty factors in Figure 4.0(a), it is convenient to illustrate the mean deviations as functions of the penalty factor ratio ψ_{22}/ψ_{11}. In doing this, one is able to reduce the interval of interest to approximately $[10^{-1}, 10^{+1}]$. The ratio actually ranges from about 3×10^{-2} to $8 \times 10^{+1}$, but no additional information is gained from the extended interval. By illustrating the mean deviations as functions of ψ_{22}/ψ_{11}, we indirectly depict their dependence on ψ_{22} as well, since ψ_{11} is constant along any of the resulting curves.

Figures 4.q and 4.r show the interacting control curves

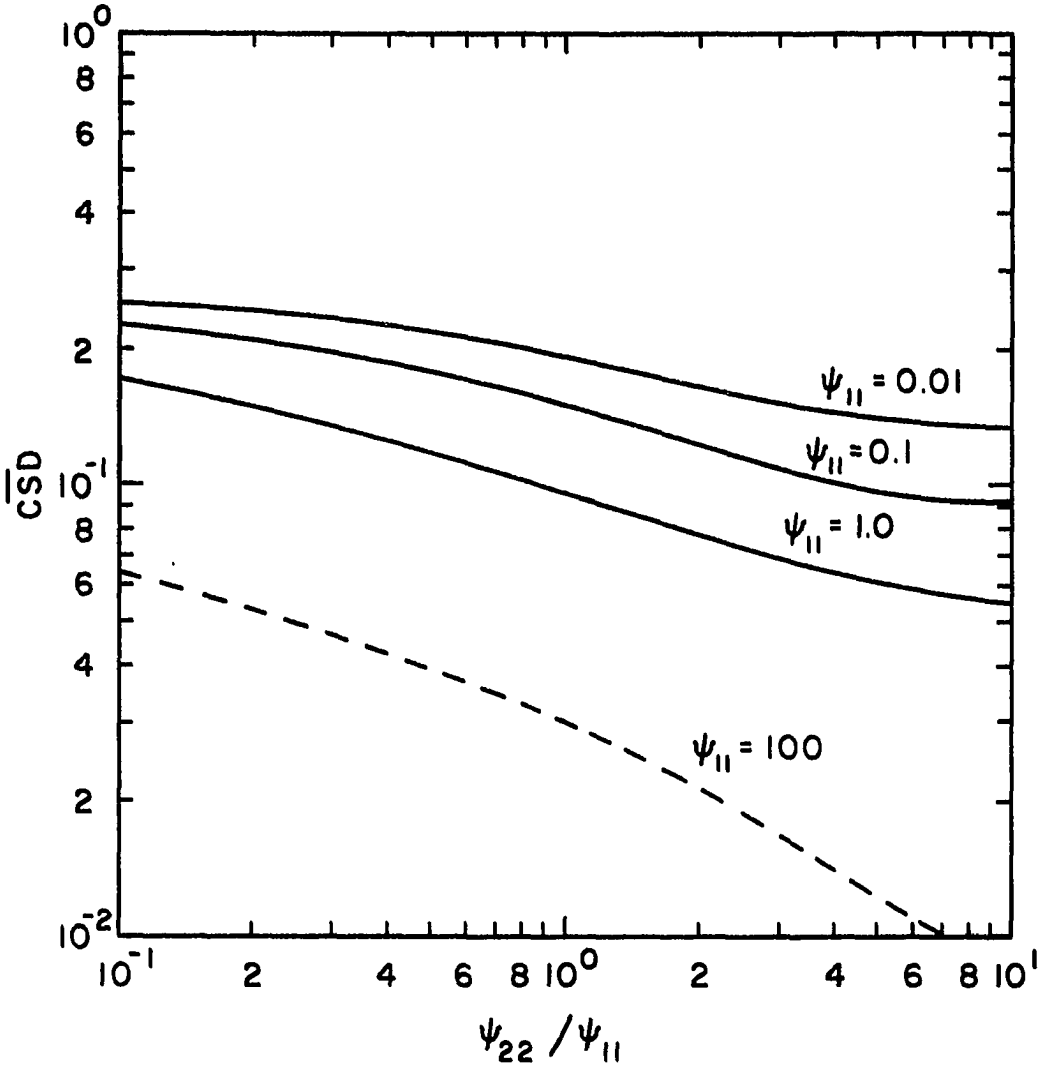

Figure 4.q

Mean Control State Deviation versus Penalty Factor Ratio

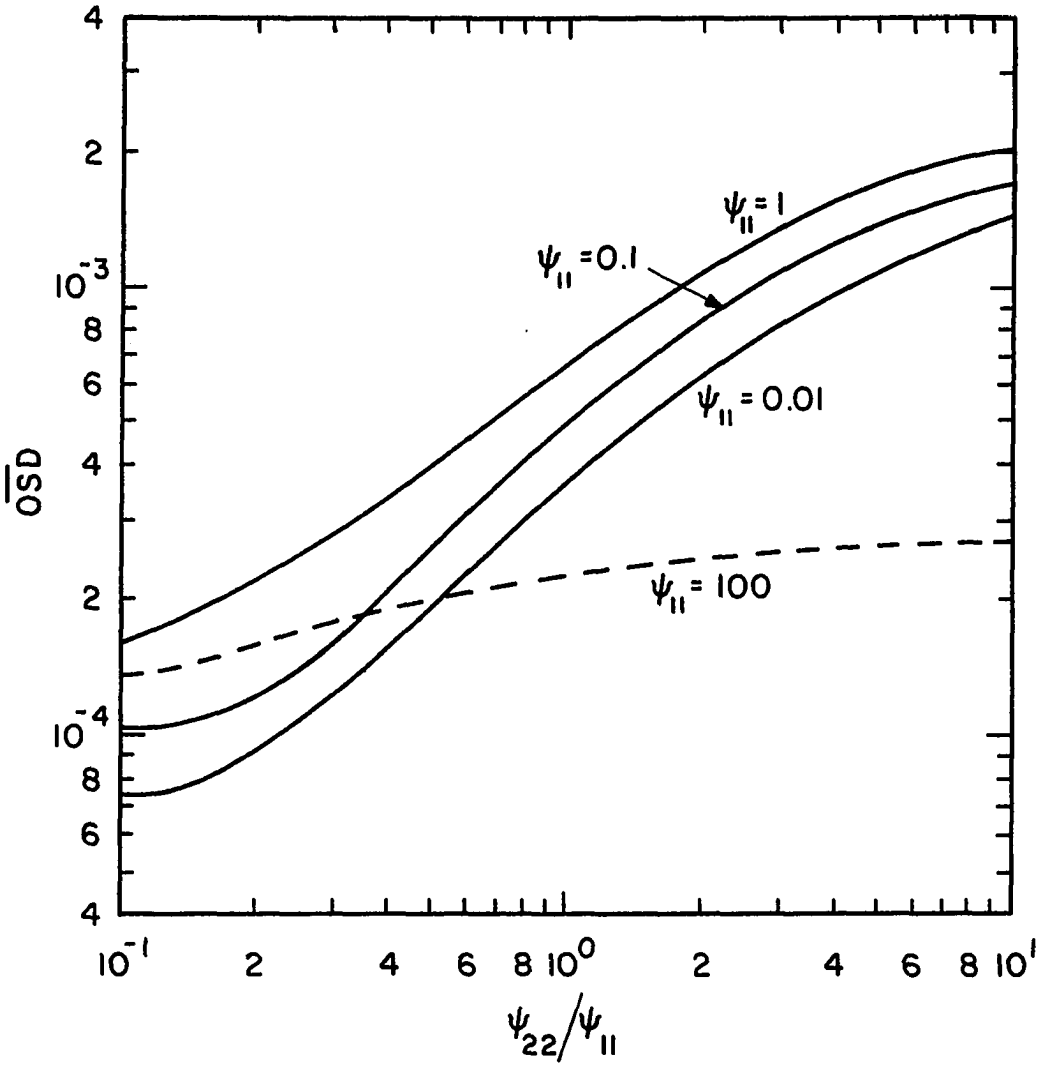

Figure 4.r

Mean Output State Deviation versus Penalty Factor Ratio

of Figure 4.0(a) in a slightly different way. The mean control and output state deviations are presented as functions of the penalty ratio ψ_{22}/ψ_{11}. In this well-behaved range of operation, where the control system is stable and no control saturation is encountered, we see the similarity of the $\overline{CSD}$ and $\overline{OSD}$ to the control effort and MSQ output error used in the single-variable case. The $\overline{CSD}$ (control effort) increases and the $\overline{OSD}$ (MSQ output error) decreases as the penalty on Q_c deviations decreases for constant ψ_{11}. The sensitivity of the $\overline{CSD}$ to ψ_{22} variations decreases while that of the $\overline{OSD}$ increases as smaller penalties are placed on the use of Q as a manipulative variable. Using Q to a greater extent relieves Q_c from some of the burden of stabilization. This extended use of Q makes the use of Q_c less critical and, consequently, the control effort expended less sensitive to changes in the penalty on Q_c. Releasing Q_c from a portion of the task of stabilization gives it freedom to have a larger effect on output regulation making the output error more sensitive to changes in its penalty ψ_{22}.

In analyzing the graphs for changes in the ψ_{11} penalty for constant $\psi_{22}$and on the basis of the <u>magnitudes</u> of the mean deviations, one must keep in mind the shifts in the relative positions of the curves due to the effect of dividing the abscissa by the corresponding ψ_{11}. In other words, if the deviations were to be plotted as functions of ψ_{22}, the abscissa of each point on a ψ_{11} curve must be

multiplied by its respective ψ_{11} before plotting. For instance, the $\psi_{11} = 10^2$ curve would, in effect, shift horizontally two cycles to the right, the $\psi_{11} = 10^{-1}$ curve would shift one cycle to the left, and so on. The abscissa of the resulting plot would be ψ_{22}.

Rather than present these plots we will simply state the results in brief. Smaller fractional decreases in the penalty on Q decreases the control effort for constant values of ψ_{22}. Larger fractional changes in ψ_{11} must be accompanied by comparable changes in ψ_{22}, otherwise control variable saturation or inability to control at the unstable point occurs depending on the sign of the changes. The decrease in control effort with increased use of Q for constant ψ_{22} was the reason for referring to Q_c as the primary control variable. The small decrease in control effort is accompanied by a large increase in output error. The decrease in control effort can be explained by saying that Q_c is better suited for regulation; thus, using Q more releases Q_c from some of its stabilization duties in which it was apparently not well-suited in view of its excessive increase in motion. In other words, the increased use of Q was more than balanced by the decreased use of Q_c. The increase in output error with increased use of Q for constant ψ_{22} can only be explained by the accompanying decreased use of Q_c.

Thus for the four interacting control curves presented one should use Q only enough to insure stability at the

reactor's unstable point and vary ψ_{22} to obtain the desired error. One may have to use Q to a greater extent at the expense of a higher control effort to obtain a satisfactorily small output error.

Control Performance for Normal Weighting Factors

As mentioned earlier, the interacting controllers of Figure 4.0(a) were weighted heavily toward producing a finely-controlled reactor temperature. This temperature regulation would, of course, attenuate the reactor concentration to a certain degree due to the relationship between the concentration and temperature in the reactor. Since there are usually disparities in the absolute magnitudes of the various outputs, the output weighting factors in the performance index must be adjusted accordingly. This will alter the controller specifications in such a way as to yield the desired attenuation in each output.

Referring to equation (A.3), we see that the weighting is placed directly on the absolute deviations in the outputs rather than the normalized deviations. Multiplying the numerator and denominator of each output term by the square of the corresponding output set point results in a new set of weighting factors $\phi'_{ii} = Z_{is}^2 \phi_{ii}$ on the normalized output errors. The symbol Z_{is} is the setpoint for the ith output variable. As only the relative magnitudes of the weighting factors are of importance, we now arbitrarily set $\phi_{11} = 1$. Then, to place an equal weight on each of the normalized

output errors, simply set

$$\phi_{kk} = (Z_{is}/Z_{ks})^2 \qquad (4.17)$$

Increasing this ϕ_{kk} weighting factor increases the importance of the normalized error in the kth output. This results in increased attenuation of this output for the control system implemented with the corresponding regulators. For a lack of any specific control requirements along this line for the system under consideration, we left the ϕ_{kk} weighting factors unchanged in obtaining the following control performance results.

Consider the chemical reactor considered previously. By varying the control penalty factors for the interacting control configuration utilizing the normal weighting factors, the performance curves of Figure 4.s(a) are obtained. The relative insensitivity of the mean control state deviation to variations in the ψ_{11} penalty factor for controllers which yielded control performance similar to that of the noninteracting controllers prompted the exhibition of the ψ_{22} isograms. To give the noninteracting control scheme every advantage possible, we have placed no constraint whatsoever on the maximum allowable feedback gain. This enables the noninteracting controllers to effect a greater reduction in the output error.

In spite of the removal of all restrictions on the size of the feedback gains in the noninteracting control scheme, the optimal interacting controllers are still

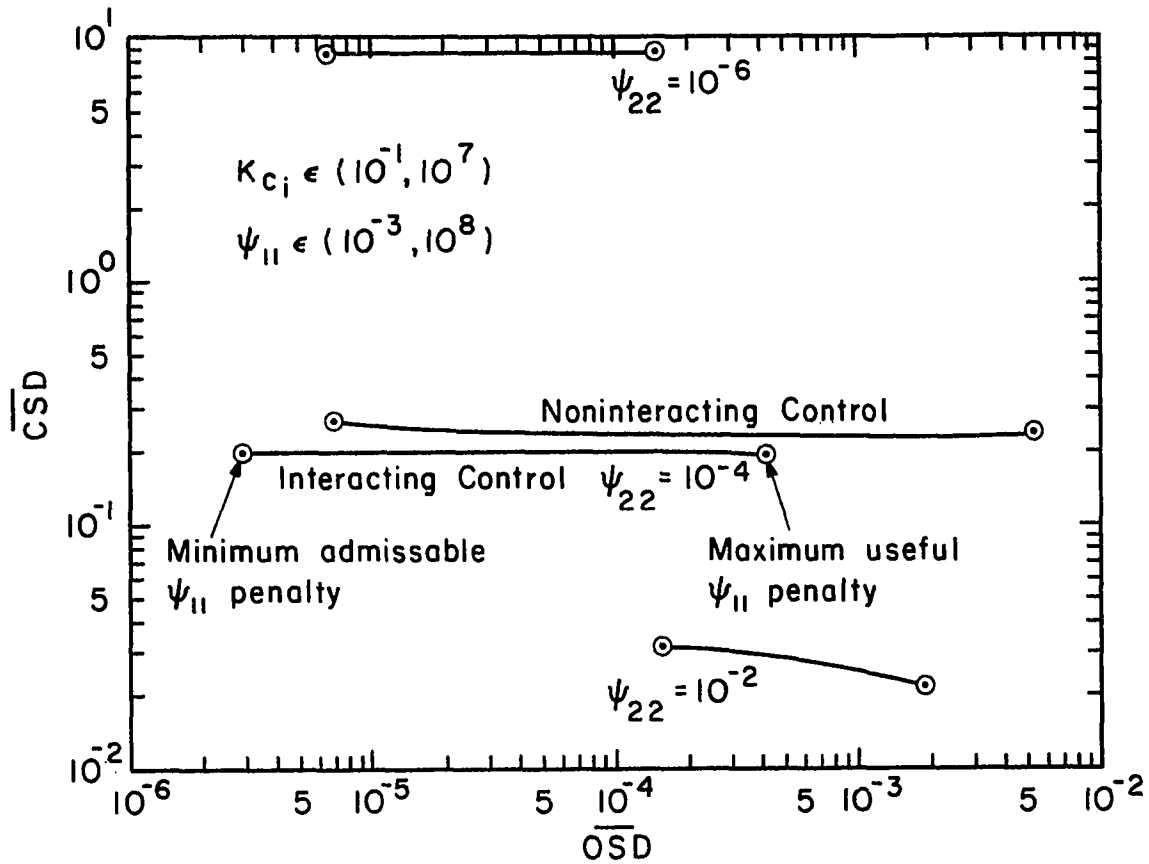

Figure 4.s.(a)

Performance Curves for Normal Weighting Factors

capable of producing the same quality of control with less control effort. Further, the illustration shows that the interacting system controllers can effect a higher quality of control than is possible with the noninteracting control configuration. For the particular interacting controllers used, the 57 percent reduction in the minimum output error level is accomplished despite the 23 percent reduction in the mean control state deviation of the interacting control signals. Other reduced combinations of $\overline{OSD}$ and $\overline{CSD}$ are possible with different penalty factors. The interacting controllers corresponding to the $\psi_{22} = 10^{-6}$ isogram are capable of producing as low a level of output error as the noninteracting controllers. However, the low penalty on the use of the Q_c control variable prompts its overuse and a correspondingly higher control state deviation. Lower levels of control effort are possible with the interacting controllers at the expense of control quality.

At this point a few comments are in order concerning the shapes and the production of the performance curves of Figure 4.s. First of all, the curves were obtained by system simulations for process times of eight minutes. If one refers back to Figures 4.m and 4.n, it can be seen that this easily allows time for very good averages of the control and output state deviations. Also, the level of control state error in the noninteracting control case is almost identical to that of Figure 4.O, thus reinforcing the validity of the earlier performance curves. The curves

are merely shifted slightly to the right due to the short process simulation time.

Regarding the shape of the interacting control curves, the left ends correspond to minimum admissible penalties on the use of the Q control variable. This means simply that the use of ψ_{11} penalties smaller than those corresponding to the left ends of the curves triggers an excessive use of the material flowrate and, subsequently, Q control saturation. The right ends of the curves correspond to maximum useful ψ_{11} penalties. The specification of larger ψ_{11} values produces no change in control performance. The material flowrate is simply not used as a control variable if the penalty on its use gets any larger than the values corresponding to the right ends of the curves.

Figure 4.s(b) shows the control signals and output forms for both systems operating with about the same level of output attenuation. Although the material flowrate control signals are approximately equal, the interacting control scheme accomplishes the control with a much lower level of coolant flowrate activity.

A Space of Admissible Penalties

It is easier to justify the selection of the $\psi_{22}\varepsilon[10^{-2}, 10^{-4}, 10^{-6}]$ used for illustration in Figure 4.s(a) in the following context. Consider the m-dimensional space of all penalty factors for an m-output system.

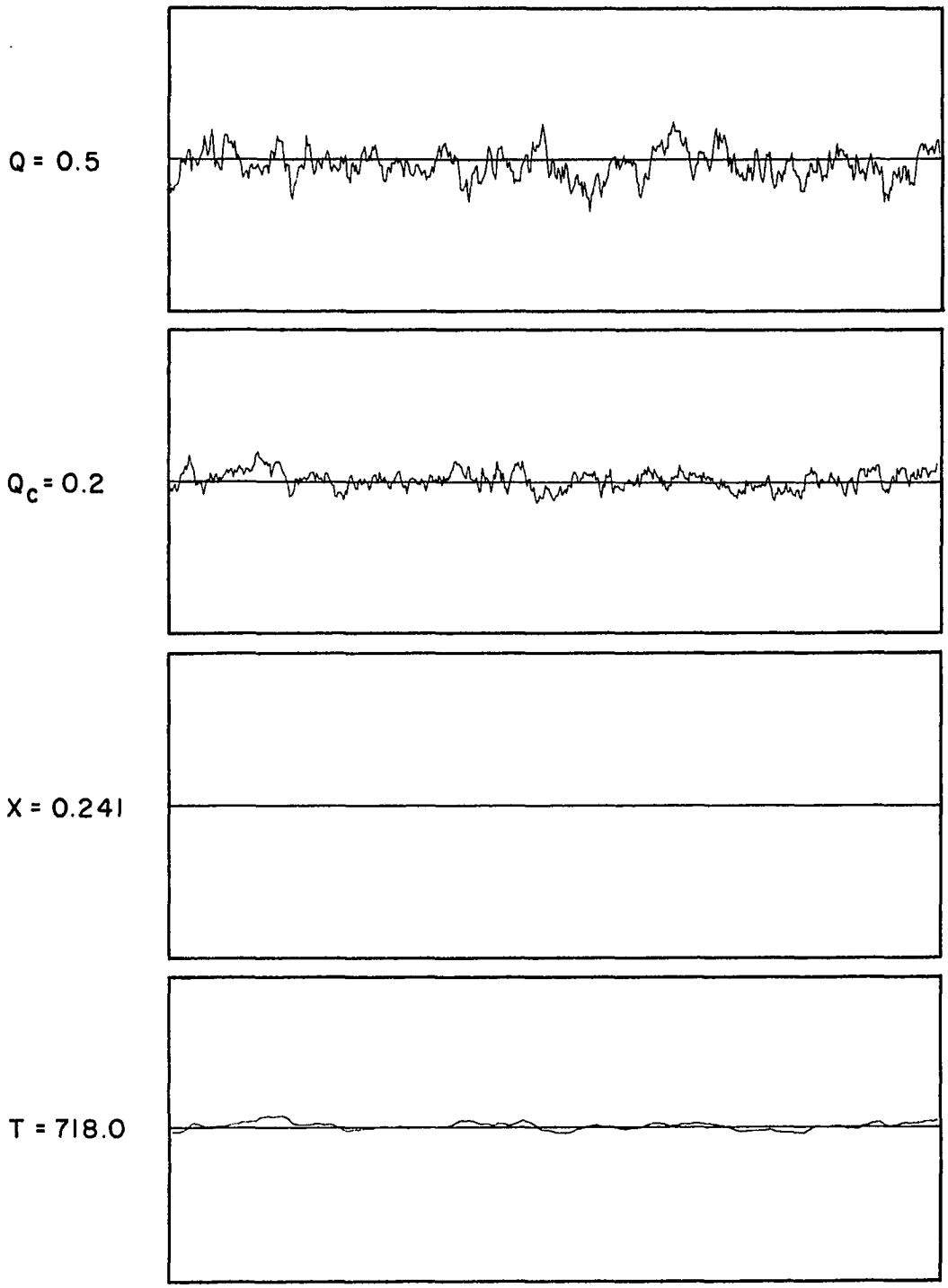

(a) INTERACTING CONTROL

Figure 4.s.(b)
Outputs and Command Inputs for Interacting and Noninteracting Systems

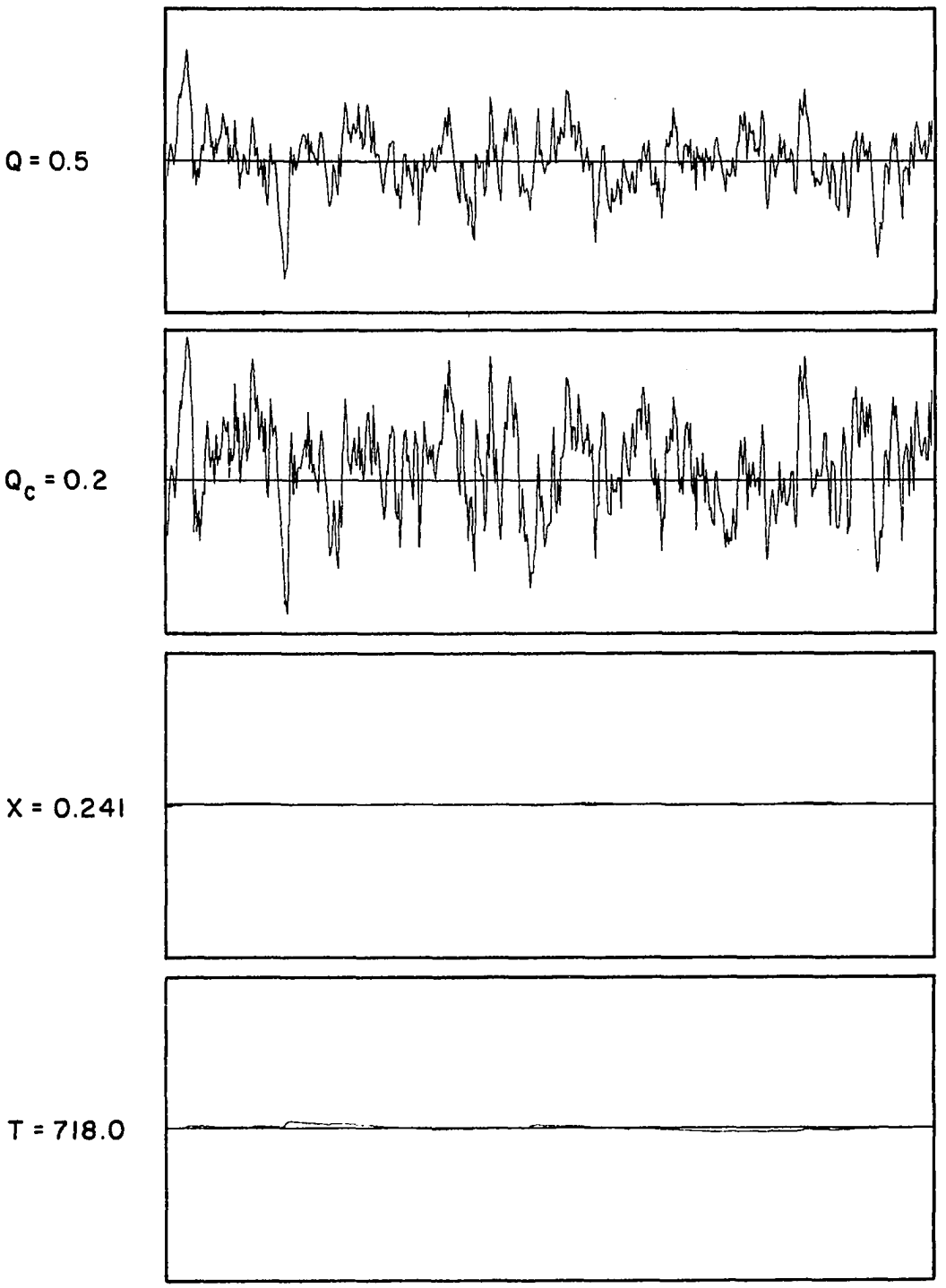

(b) NONINTERACTING CONTROL

Figure 4.s.(b)

Outputs and Command Inputs for Interacting and Noninteracting Systems

For a given set of output weighting factors there is some subset of the penalty space with elements that produce admissible control in the control system. Admissible control is defined here as stable, unsaturating control. There is no known method of determining a priori the elements of this admissible penalty space.

Figure 4.t defines the two-dimensional admissible penalty region for the chemical reactor under investigation using normal weighting factors. The sets of penalty factors above the region produce controllers which are incapable of inducing stability in the reactor. Below the region the penalty on Q_c is so small that control variable saturation is encountered in the use of the coolant flowrate. Similarly to the left, the small penalty factor ψ_{11} produces material flowrate signal saturation. Around the lower left corner of the region an interval of transition exists where both Q and Q_c control saturation occur. Another transitory region appears at the upper left corner where material flowrate saturation gives way to poor control and finally system instability.

The upper edge occurs around $\psi_{22} = 10^{-2}$ with the lower edge in the vicinity of $\psi_{22} = 10^{-6}$. The middle of the region lies approximately along the line $\psi_{22} = 10^{-4}$. Hence, the three performance curves of Figure 4.s correspond to penalty factors which extend over the full range of admissible penalties. Extension of the region beyond the maximum

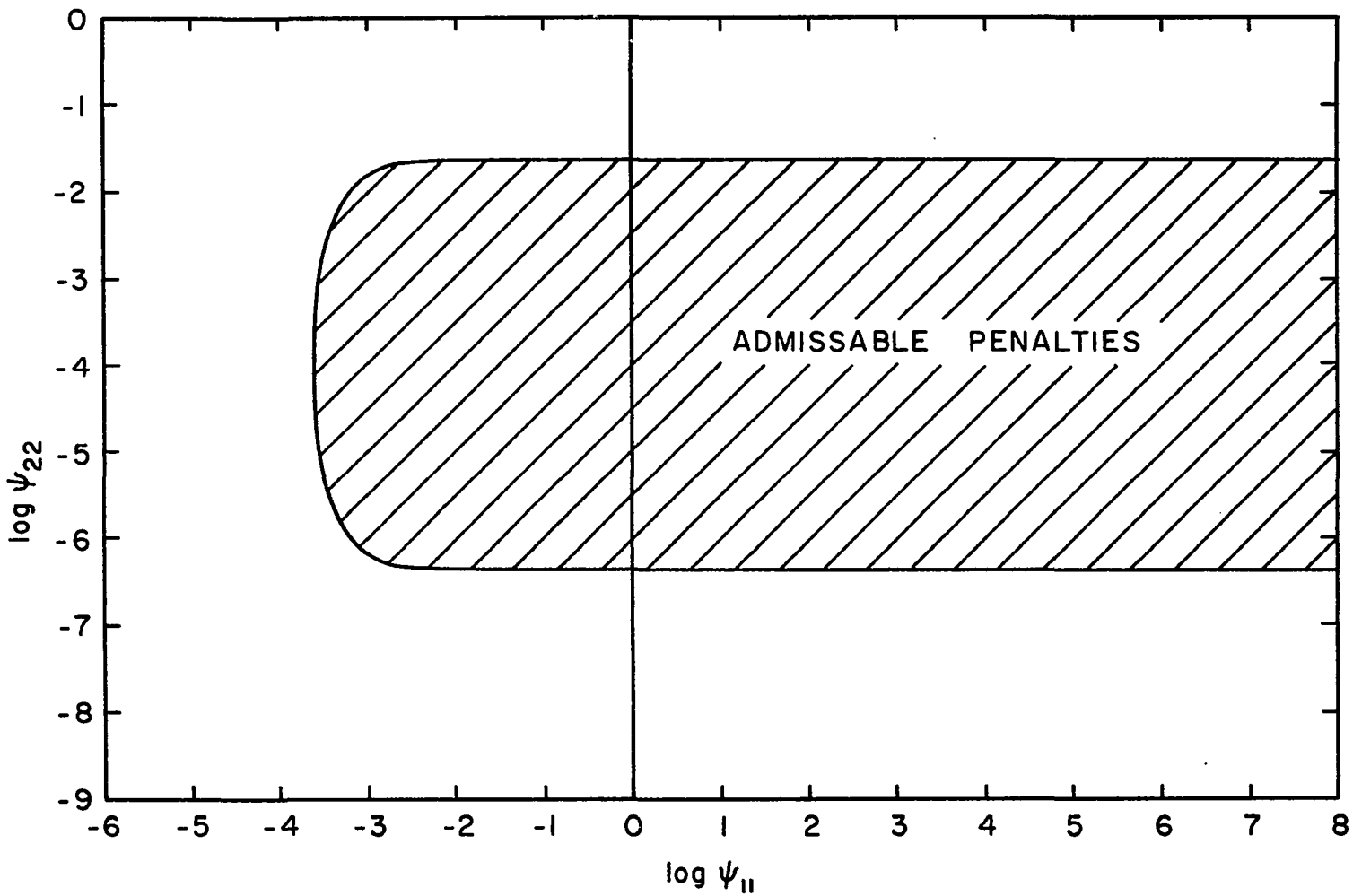

Figure 4.t

A Region of Admissible Penalties

useful penalties on Q explains the semi-infinite extent to the right. We do not see this semi-infinite characteristic in the direction of larger ψ_{22} because of the role of Q_c as the primary control variable discussed earlier. As the use of Q_c is restricted, Q must take over more of the burden of regulation making it less effective in system stabilization and worsening the quality of control. The shift to system instability occurs more suddenly as one progresses upward at higher values of ψ_{11} because Q_c then has the sole responsibility for stabilization. At lower values of ψ_{11} the use of Q is less restricted and it is able to prolong stability at least until Q_c manipulation completely ceases. In other words, there is a transitory region along the top of the admissible region decreasing in depth as one moves to the right wherein system stability exists, but where the system's outputs are poorly controlled.

The boundaries of the admissible penalty region as shown are intended to be only approximate. A complete and accurate definition of the region would require extensive computation. The illustration does clarify the selection of the ψ_{22} isograms of Figure 4.s.

Control Signal Saturation

Both the interacting and noninteracting control systems have thus far enjoyed considerable freedom with respect to control signal variations. The controllers have been allowed to specify control action corresponding on the lower end to

complete suppression of the flowrate control variables and on the upper end to flowrates four or five times the magnitudes of the desired operating states. These and other bounds were chosen arbitrarily in this simulation. They would normally be dependent upon the particular operating requirements and limitations of the given control system. The wide range included by these saturation constraints has resulted by viewing the constraints as "hard" bounds. A hard constraint results from physical limitations in the controller elements. In the case considered in which flowrates were the control variables, the lower and upper bounds correspond to completely-closed and wide-open valve stem positions, respectively.

Another "hard" constraint might be encountered in this particular control system. This constraint would correspond to limitations in the rates of change of valve-flow openings. Thus constraints on the time derivatives of the flowrates must come into consideration. This derivative dependence suggest a proportionality between the input penalty factor and the square of the frequency variable [G2]. Greenfield points out that such constraints would not generally have such a severe effect on control performance as saturation constraints. Hence, we will concern ourselves with the latter in this investigation.

Use of a specific optimal control scheme will not guarantee that the resulting control signals will not violate any existing saturation constraints. In the

interacting control scheme considered, for instance, there is no way to predict a priori the input penalty factor corresponding to a particular saturation constraint. The specification of the penalty factors is a trial-and-error procedure dependent upon saturation constraints on the one hand and performance requirements on the other. Hence, restricting the amplitudes of certain control signal variations may result in an inability to achieve the desired output attenuation. In other words, there may not exist a set of penalty factors which can satisfy both operational requirements of no control saturation and high output attenuation. In this case the control system should be redesigned to ease some of the system limitations.

To maintain the control signals within the given saturation bounds, one of two common constraint functions may be used. One of the constraint functions is linear in nature. This function may be interpretted as in Figure 4.u. Here the control signal m would violate the saturation constraints $M^{-} \leq m \leq M^{+}$ if implemented. The linear constraint function will serve to tone down the variations in the signal to the degree that it will no longer violate the signal bounds. A small percentage violation may be allowed in some cases.

Such a constraint function has essentially the same effect as the penalty factor in the scalar performance index. The penalty terms in the index imbed integral

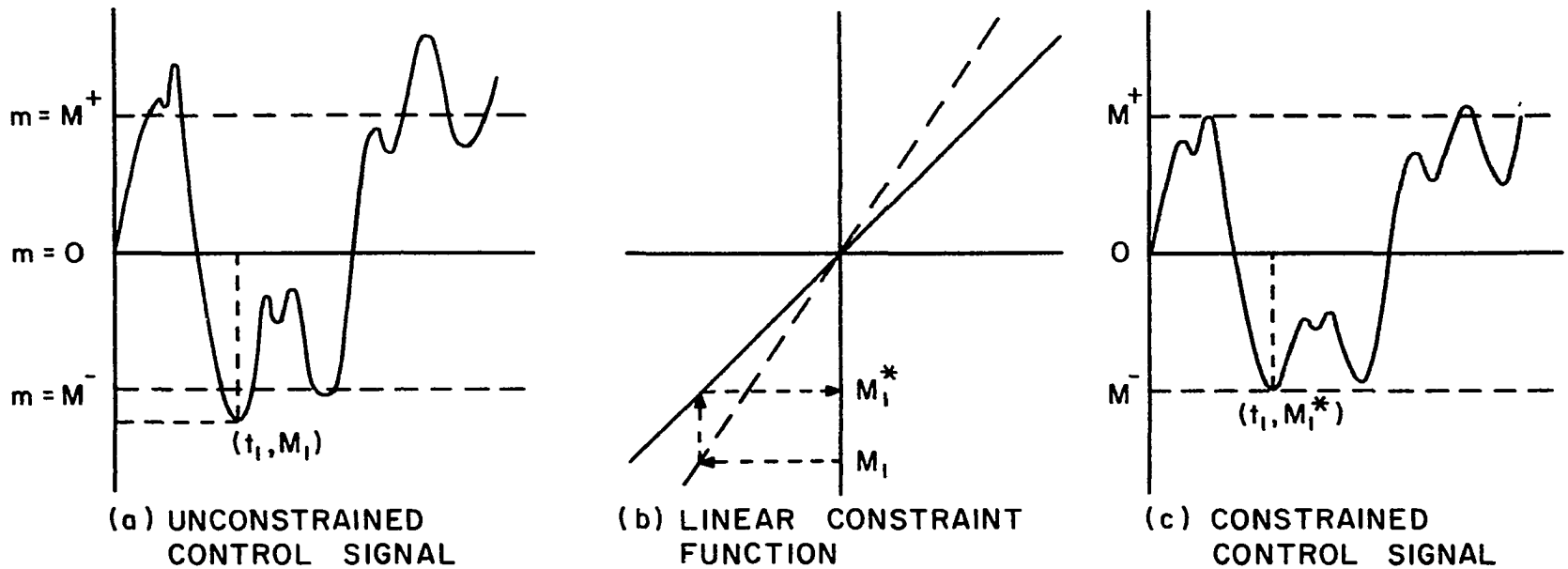

Figure 4.u

Effect of Linear Constraint Function on Control Signal

energy constraints in the performance index. This imposes a constraint on the motion of, or energy expended by, the control signal. Hence, it is somewhat attenuated. The unfortunate thing about this type of constraint function is that it simultaneously hinders the "legal" as well as "illegal" portions of the control signal. There is no need to impede the motion of that portion of the manipulatable variable that remains within the saturation bounds. Hence, a largely-unnecessary burden is placed on the control signal.

Nonetheless, the linear constraint function is useful in producing a control signal which satisfies the saturation constraints. Its counterpart, the input penalty factor, is easily manipulated in the application of the interacting control scheme. Thus, after a few trials, an unsaturating control signal vector can be obtained. In Figure 4.v the results of the application of this technique can be seen. In part (a) the control system is considered to be "subconstrained". The system is actually operating with balanced output weighting factors and with an input penalty factor matrix $\psi = (10^{-3}, 10^{-4})$. The system is sub-constrained in the sense that the penalty factor on at least one of the control variables is so small that the particular variable is violating its corresponding saturation constraints. In this case, the illegal control signal is Q_c, the coolant flowrate. It so happens that Q is in a region of operation in which it is largely insensitive

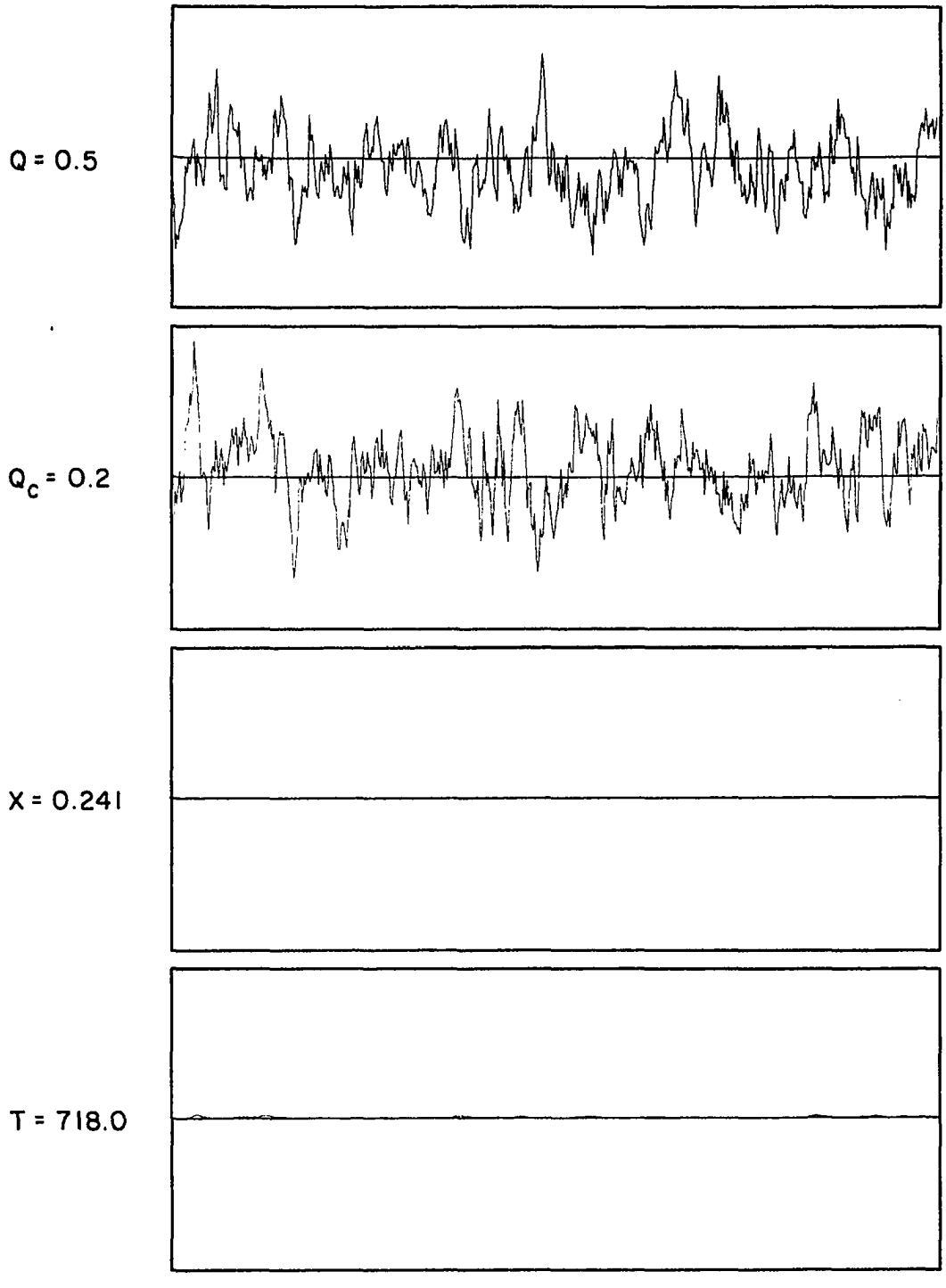

Figure 4.v

Interacting Control System Outputs with Linearly-Constrained Material Flowrate

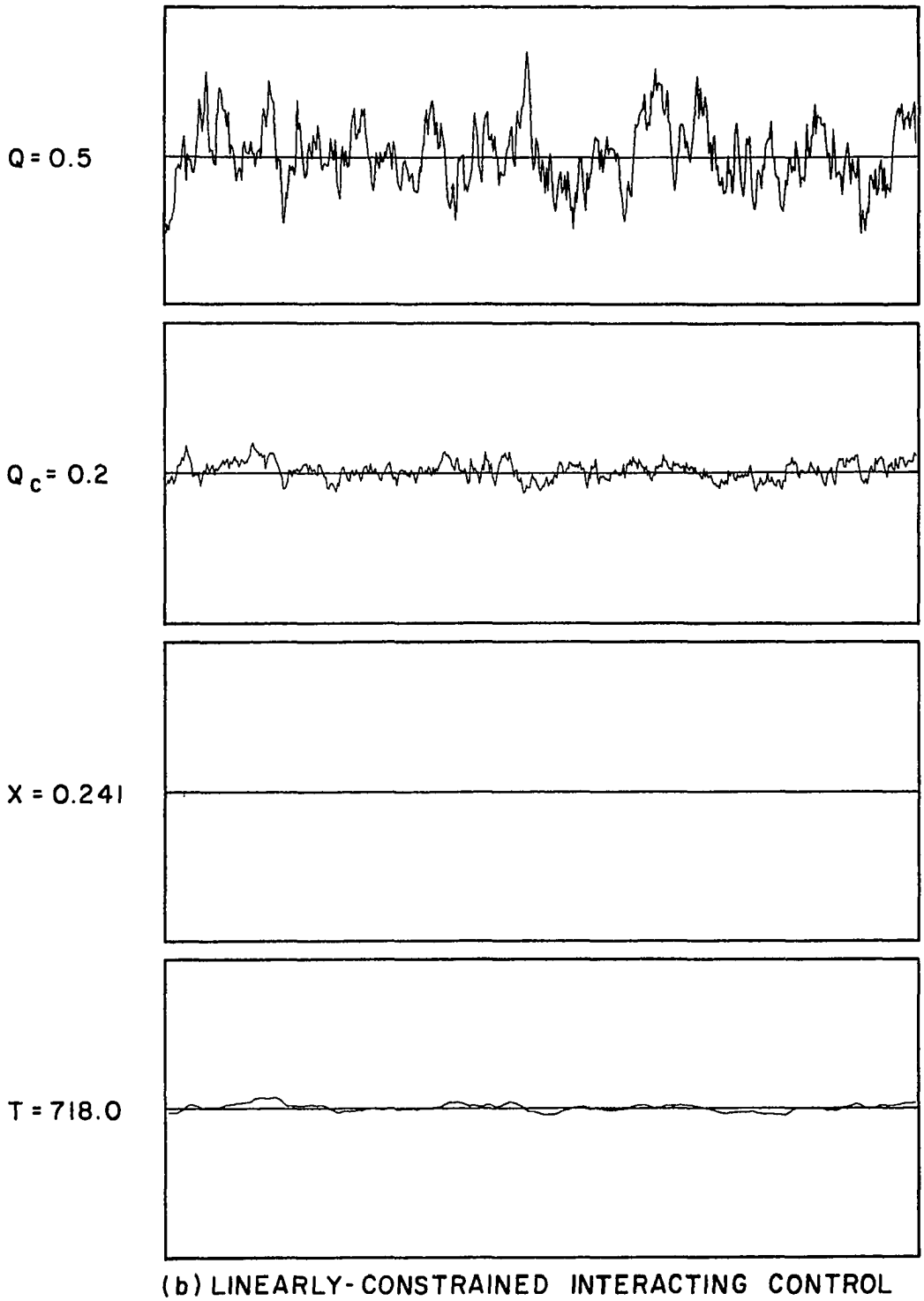

Figure 4.v.

Interacting Control System Outputs with Linearly-Constrained Material Flowrate

to variations in ψ_{11}, so rather than increasing the penalty to Q_c alone, both penalty factors will be increased by a factor of 10. The increased penalty on the use of Q_c brings it to within the saturation bounds illustrated by the dashed lines. The penalty factors are sufficiently small to allow continued control of the concentration while the quality of reactor temperature control drops.

The ease of implementation of such a linear constraint treatment of a saturating variable is inherent in the interacting control scheme. This is so because the generation of the optimal control signal is based on the minimization of a performance functional involving linear factors multiplied by the square of the control signals. Realization of a linear constraint treatment in the noninteracting control case is not so simple. The trial-and-error technique of calculation of the control parameters does not yield itself to inclusion of linear constraint functions operating on the control signals. Hence, there is no straight-forward manner of implementing a linear constraint treatment of the control variables in the noninteracting control technique.

There is, however, a technique of handling control variables which have a tendency to exceed saturation bounds that can be applied to any control system. This method involves the use of a simple clipping function. The results of such a function can be seen in Figure 4.w. The control signal is unchanged except when it violates a saturation

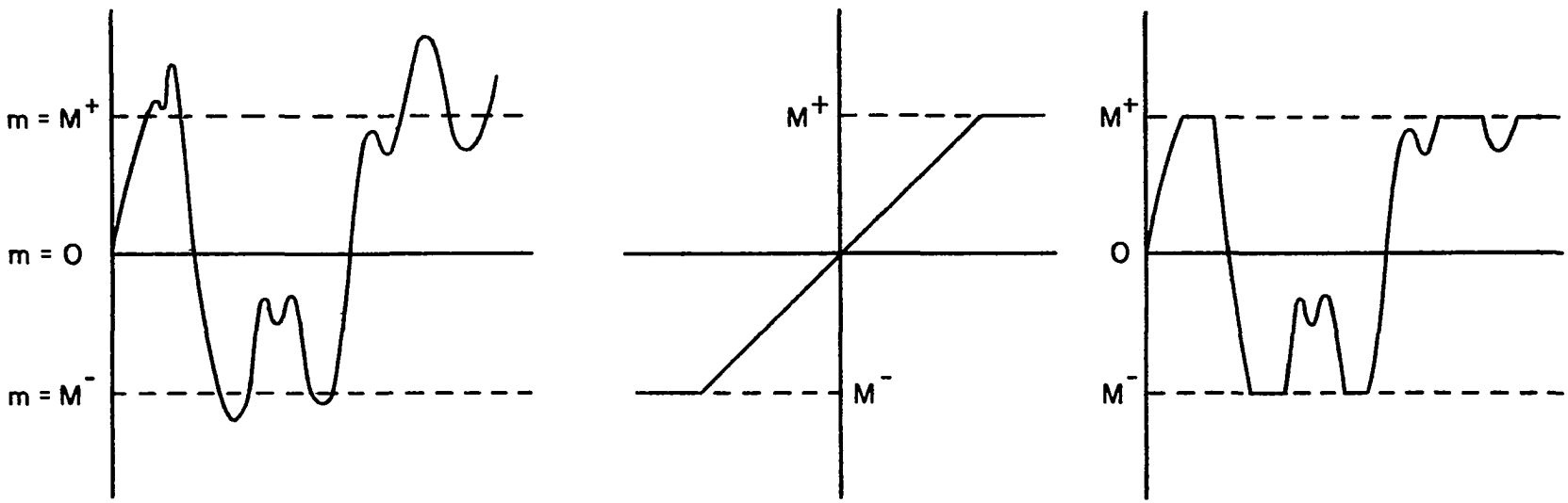

Figure 4.w

Effect of Clipping Constraint Function on Control Signal

bound. Then the signal is simply held at the bound until the controllers specify a different action. The flow valve itself might serve as a clipping function in a control system in which the compensators direct a control action beyond the physical capabilities of the valve. The advantage of such a constraint treatment is that it frees the control signal between the saturation bounds. Control action is unburdened there and, hence, no additional control quality should be needlessly sacrificed.

The results of the clipping function are somewhat more complex in the multivariable control case. If one or more control signals are holding steady at their saturation bounds, the remaining command signals will modify their form to account for the fact that they alone must cancel input and output variations. This phenomena has been termed "control effort redirection" [G2]. Obviously, it is unique to the multivariable control system. A small amount of this redirection can be seen in Figure 4.x and 4.y.

Figure 4.x illustrates the effect of the clipping function on the interacting control system. Figure 4.y does the same for the noninteracting control system. Both systems show some control effort redirection. The effect of the clipper is more evident in the noninteracting control system. Although the control variables still maintain enough freedom to control the concentration well, the

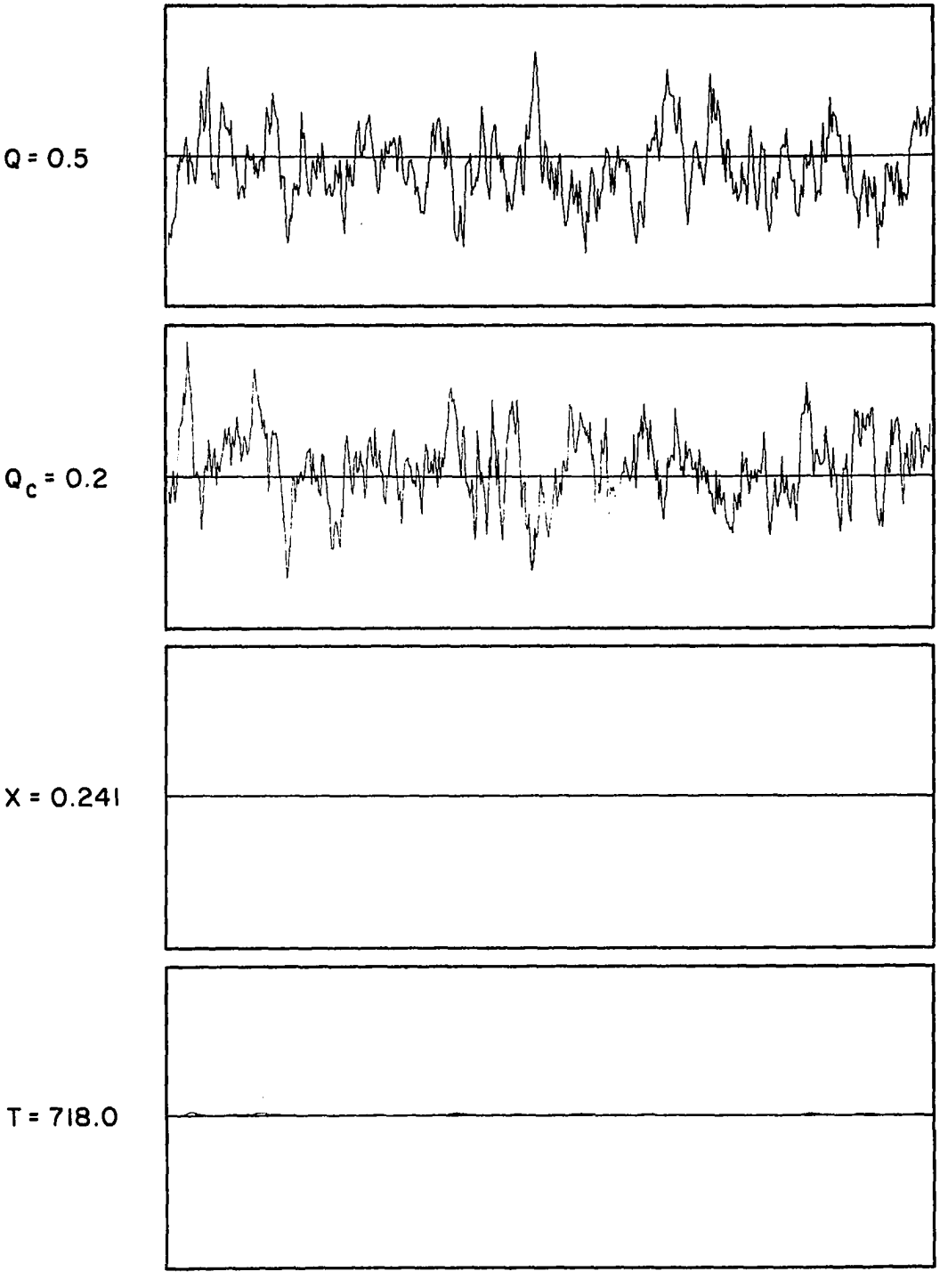

(a) NO CLIPPING FUNCTION

Figure 4.x

Effect of Clipping Function Constraint on Interacting Control System

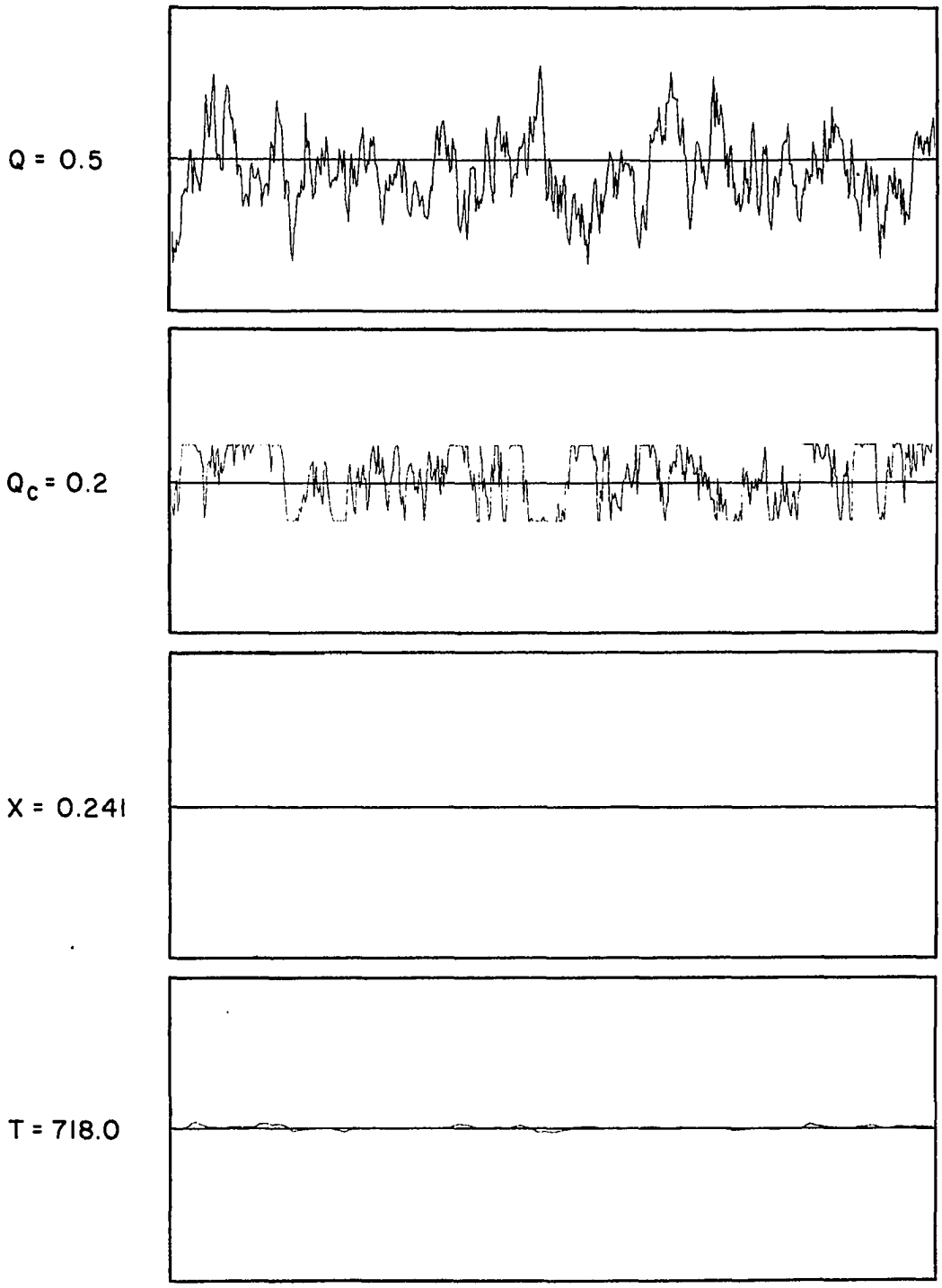

(b) $\Delta Q_c = \pm 0.05$ CLIP

Figure 4.x

Effect of Clipping Function Constraint on Interacting Control System

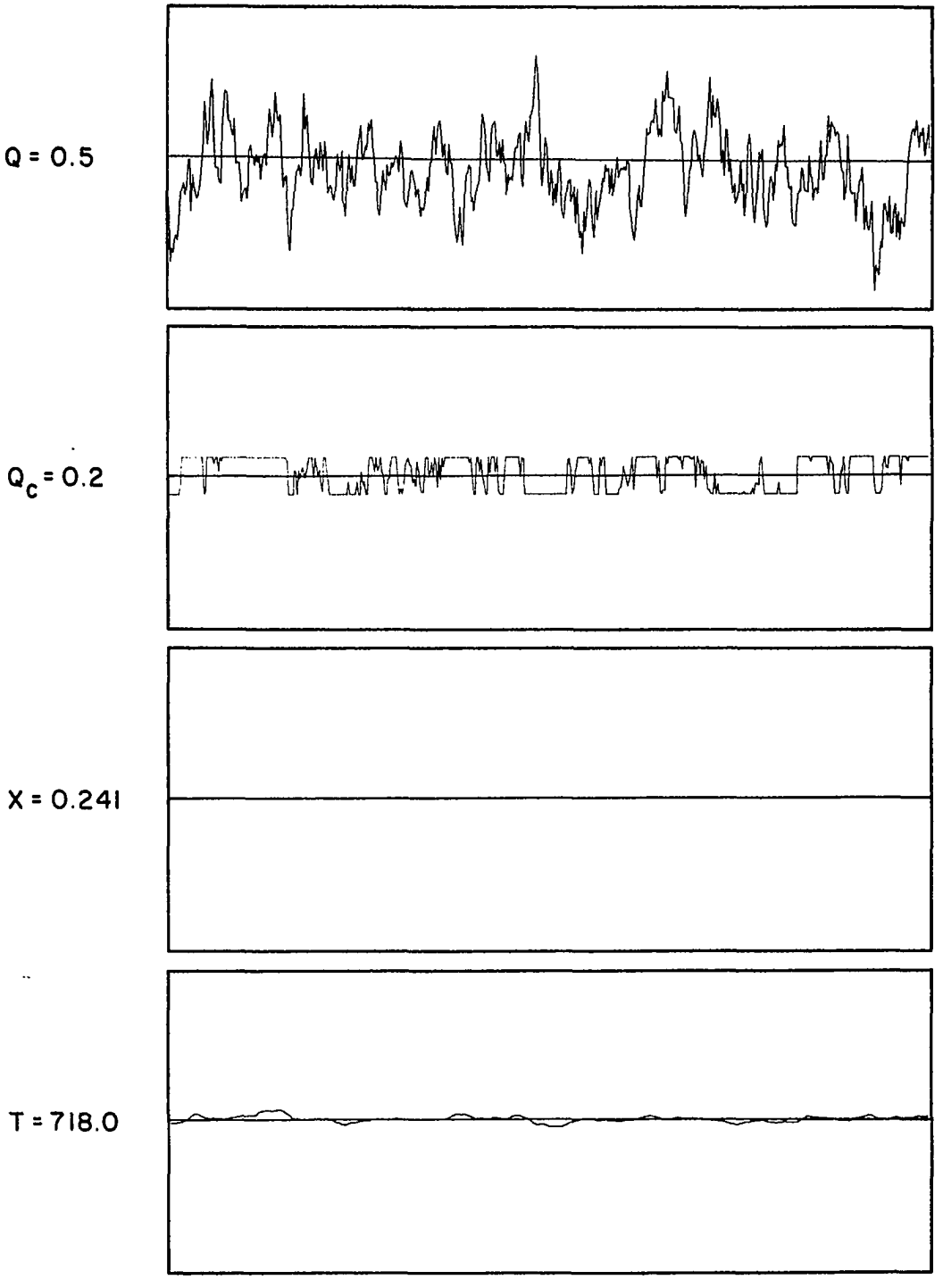

(c) $\Delta Q_c = \pm 0.025$ CLIP

Figure 4.x
Effect of Clipping Function Constraint on Interacting Control System

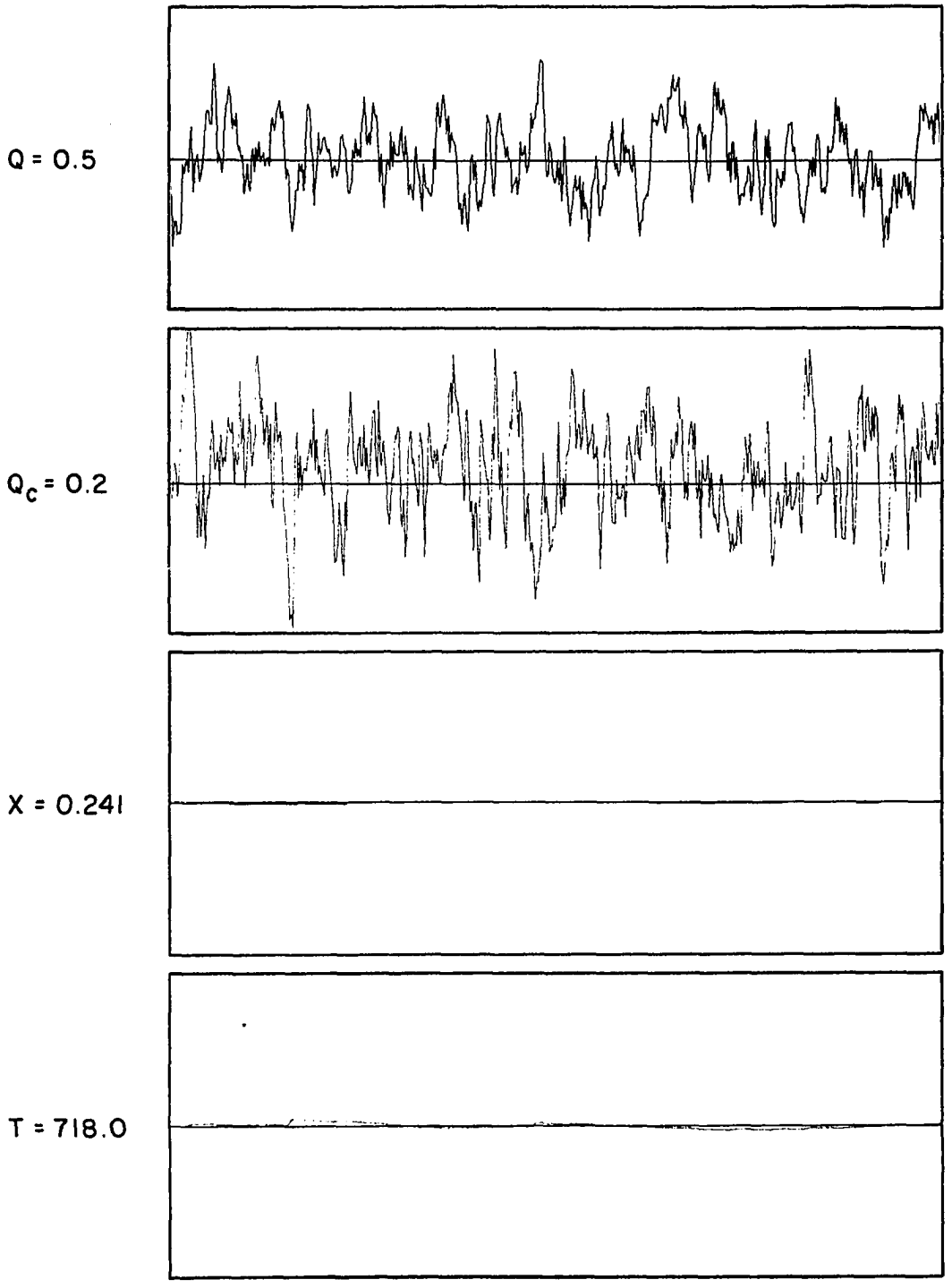

(a) NO CLIPPING FUNCTION

Figure 4.y

Effect of Clipping Function Constraint on Noninteracting Control System

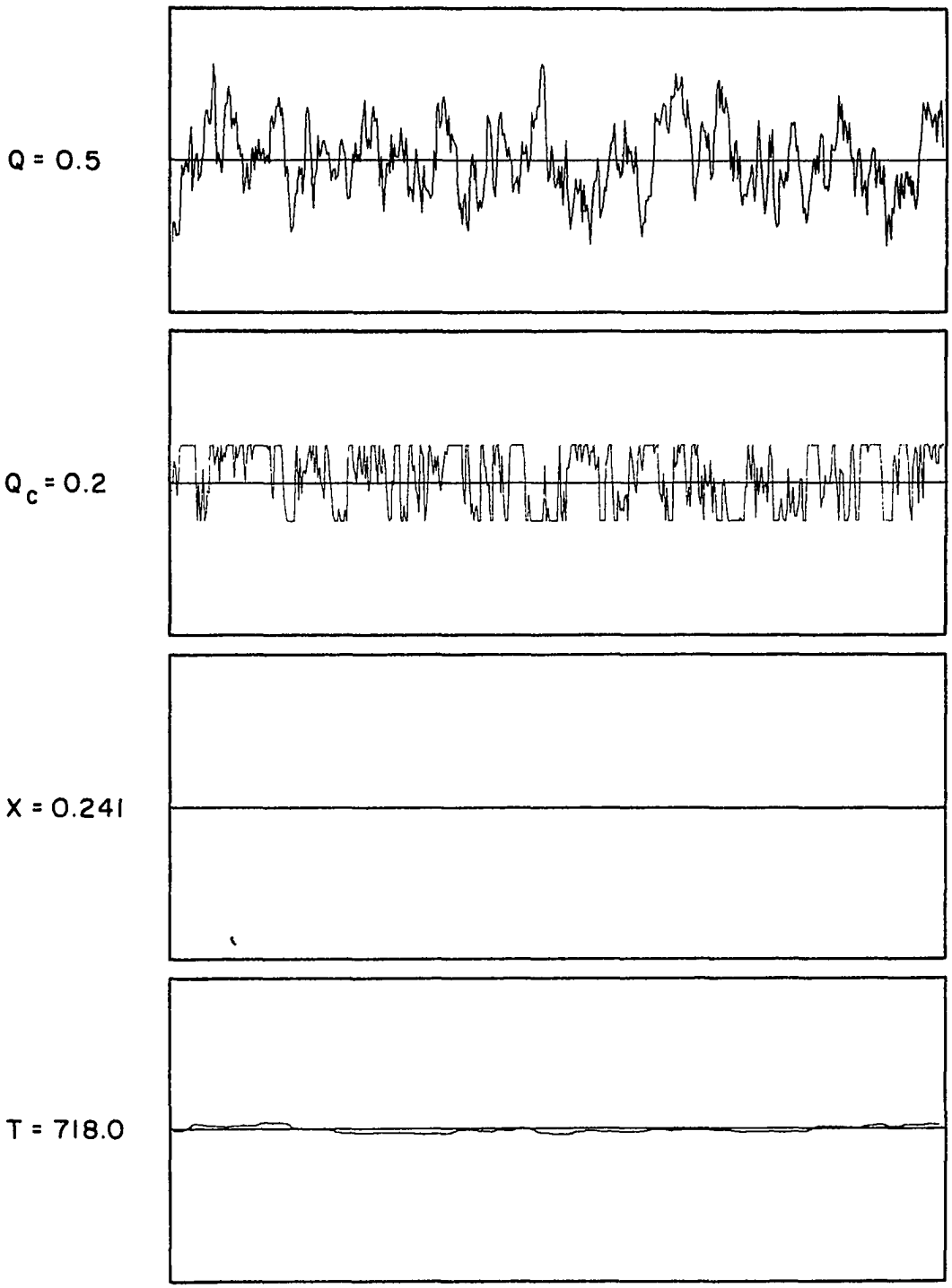

(b) $\Delta Q_c = \pm 0.05$ CLIP

Figure 4.y

Effect of Clipping Function Constraint on Noninteracting Control System

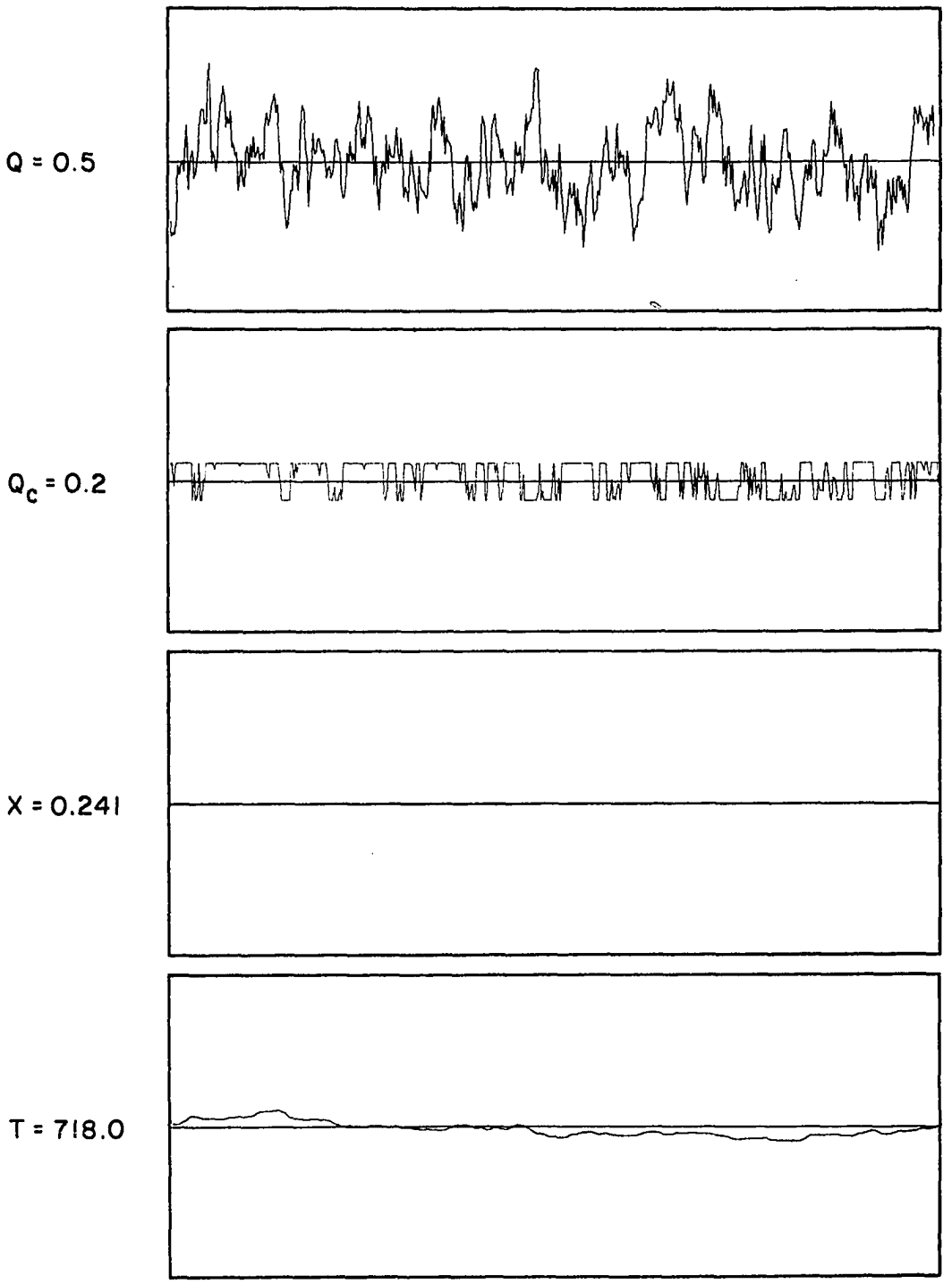

(c) $\Delta Q_c = \pm 0.025$ CLIP

Figure 4.y

Effect of Clipping Function Constraint on Noninteracting Control System

reactor temperature suffers poorer control in the noninteracting control scheme because of the dual roles of the control variables. They must not only regulate the outputs; they must also decouple the multivariable system.

We can get a comparison of the linear saturation constraint and the clipping constraint functions operating on this multivariable system by considering Figure 4.v(b) and 4.x(c). In both constrained control systems the coolant flowrate is restricted to an interval extending $\pm$ 0.025 $ft^3/sec.$ from the steady state operating point. In this case the clipping function constraint maintains a slightly lower level of reactor temperature error. This verifies an earlier discussion regarding poorer control due to unnecessary burdening of the control signal within the saturation bounds.

Constraints on the material flowrate control variable yield results similar to those above. Tighter constraints on either or both control signals eventually result in a control system inability to maintain stable regulation of the controlled outputs. In the limit, tighter and tighter constraints result in the uncontrolled reactor outputs of Figure 4.k.

In summary, both control systems exhibit an ability to maintain adequate output regulation when subjected to reasonable saturation constraints. While there is no apparent method of implementation of a linear constraint

treatment on the noninteracting control system, such a treatment is already built into the interacting control scheme. When a clipping function constraint is in effect on both control systems, the interacting control scheme provides the greater output attenuation in every case.

Effect of Output Measurement Noise on Control Performance

To apply a control scheme to an industrial process requires the use of measurement devices as well as other control equipment. These devices are always limited to a degree in their ability to sense a small variation in a particular signal. In the case of output measurement, the sensing devices may be insensitive enough to "miss" small deviations in the controlled variables, thus giving rise to a certain minimum level of output attenuation. In simpler terms, the compensators cannot direct control action to alleviate an output error that they cannot "see" in the first place. This dead band region of operation has been discussed by West [W2]. He points out the difficulty which arises in solving the optimal control equations for what is now a discontinuous control signal. The reader is referred to West for further discussion. In this section we will extend our investigation to a consideration of the relative effect of this dead zone on the interacting and noninteracting control techniques.

The dead band phenomena can be simulated by the introduction of a low level of noise in the feedback control

loop. This noise can be viewed as measurement noise i.e. the output signals when monitored for control are cluttered with superimposed noise signals. This can be seen from Figure 4.z. The measurement noise vector, $\underline{n}(t)$, shields a portion of the outputs from view thus hindering additional output attenuation.

Identical measurement noise vectors were superimposed over the output vectors from both the interacting and the noninteracting control systems. We will now investigate the effect on the performance curves of Figure 4.s. One would expect the curves to shift in the direction of increased output error and increased control effort. Consideration of Figure 4.aa verifies this suspicion. The minimum possible output error increases by almost two orders of magnitude for both the interacting and the noninteracting control systems. The output regulation can be accomplished with approximately the same level of control effort as in the previous case. To keep the control effort down in the interacting control case, the penalty factors must be increased. In the ideal case, a penalty factor $\psi_{22} = 10^{-4}$ gave approximately the same results for interacting control as was obtained using noninteracting control. Use of that penalty factor in the presence of measurement noise, however, gives rise to a larger control effort required for the interacting scheme as opposed to the noninteracting method. By increasing the components of the penalty factor matrix, the interacting

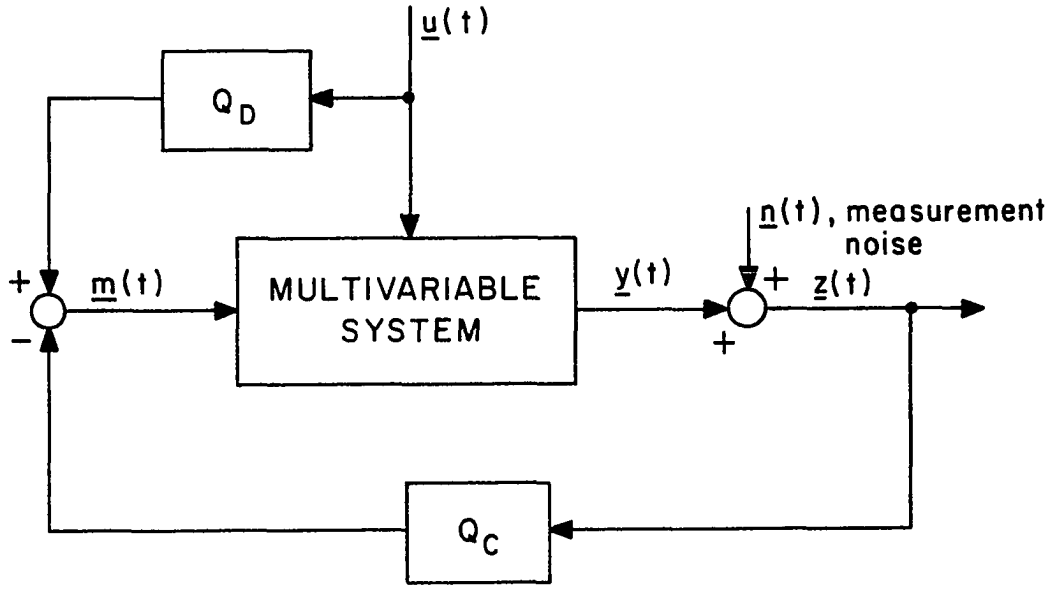

Figure 4.z

Illustration of the Introduction of a Measurement Noise Vector

control scheme can achieve the same level of output error as the noninteracting scheme and it can do so with considerably less control effort--an order of magnitude less. Further, one can verify from Figure 4.aa that the interacting control system can achieve at least a 57 percent smaller output error than is possible with the noninteracting control system. On top of that, it takes not more effort, but at least 67 percent less control effort to accomplish the higher level of output attenuation. While the reduction in output error from noninteracting to interacting control is about the same as in the ideal case, the introduction of measurement noise has actually increased the benefits of using the interacting control system by providing greater reductions in the control effort.

Figure 4.bb illustrates the decreased control effort of the interacting control system. Both systems produce about the same output error, but the control efforts differ greatly. Although the coolant flowrate control variables are about the same, there is considerably lower activity in the material flowrate for the interacting control system. By slowly increasing the ψ_{11} penalty factor and reducing the ψ_{22} factor, one can bring the two interacting control variables into balance at a level of activity considerably lower than the corresponding noninteracting variables.

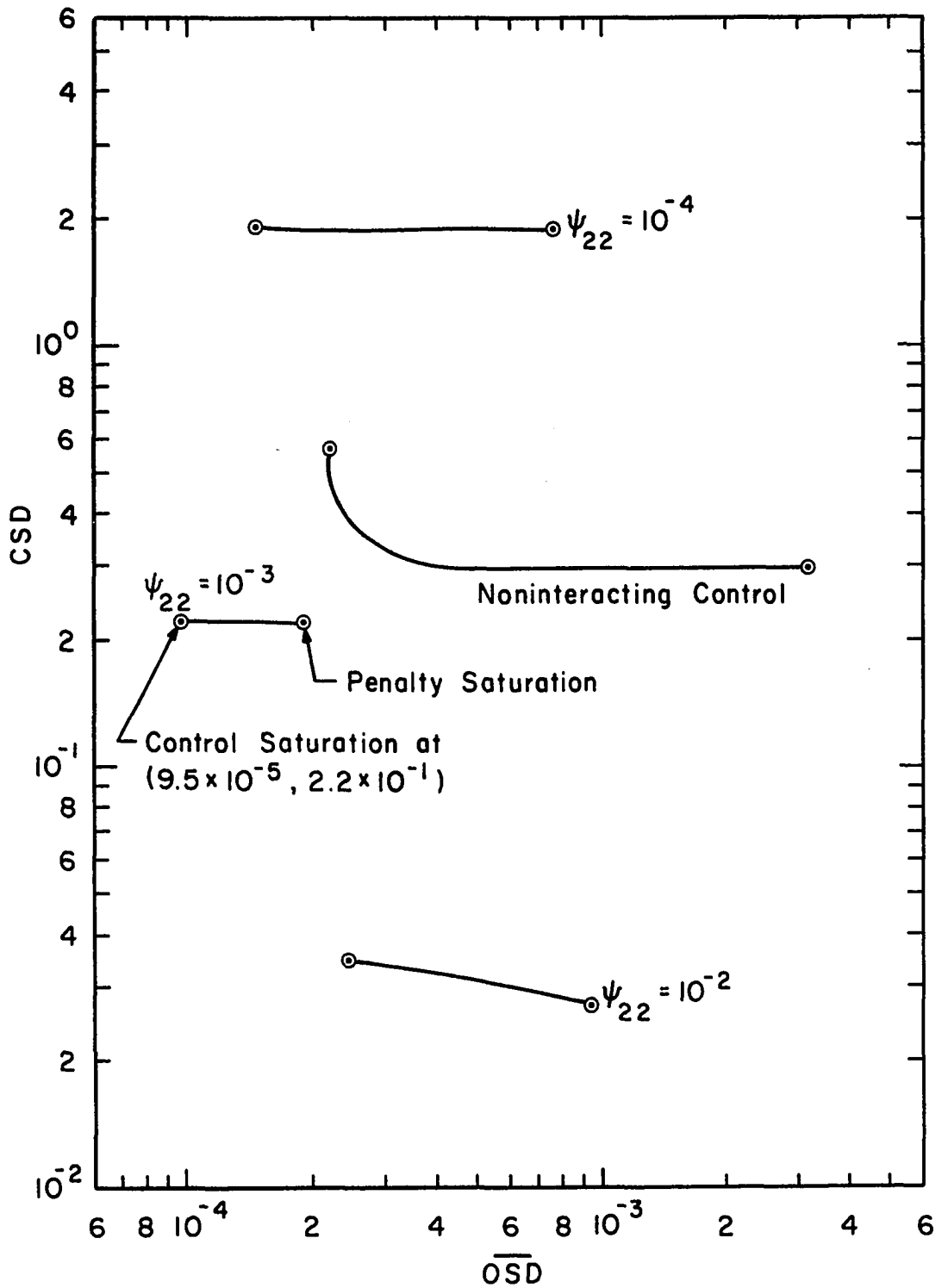

Figure 4.aa

Performance Curves for System Subject to Output Measurement Noise

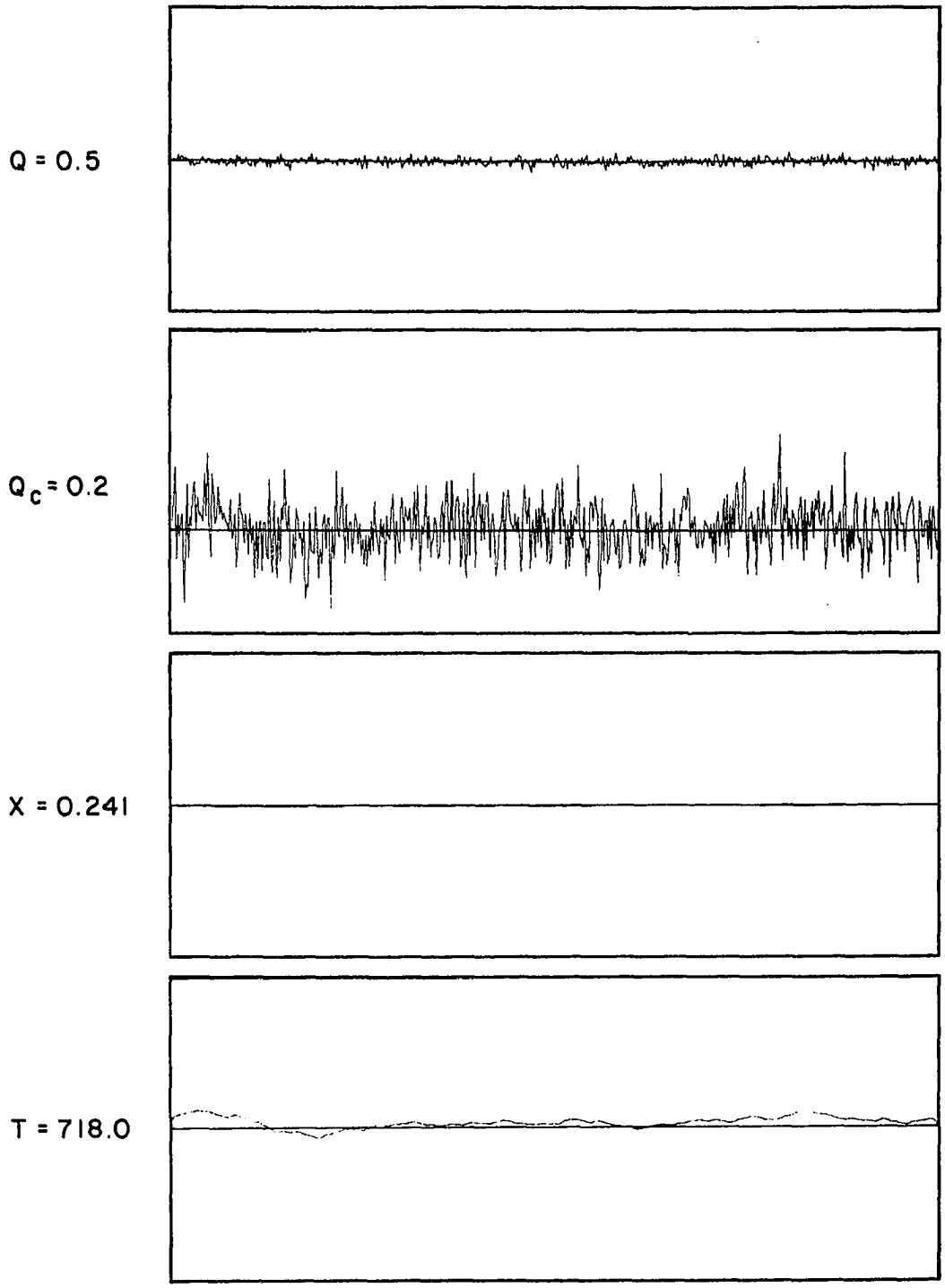

(a) INTERACTING CONTROL

Figure 4.bb

Interacting and Noninteracting Control System Responses in the Presence of Measurement Noise

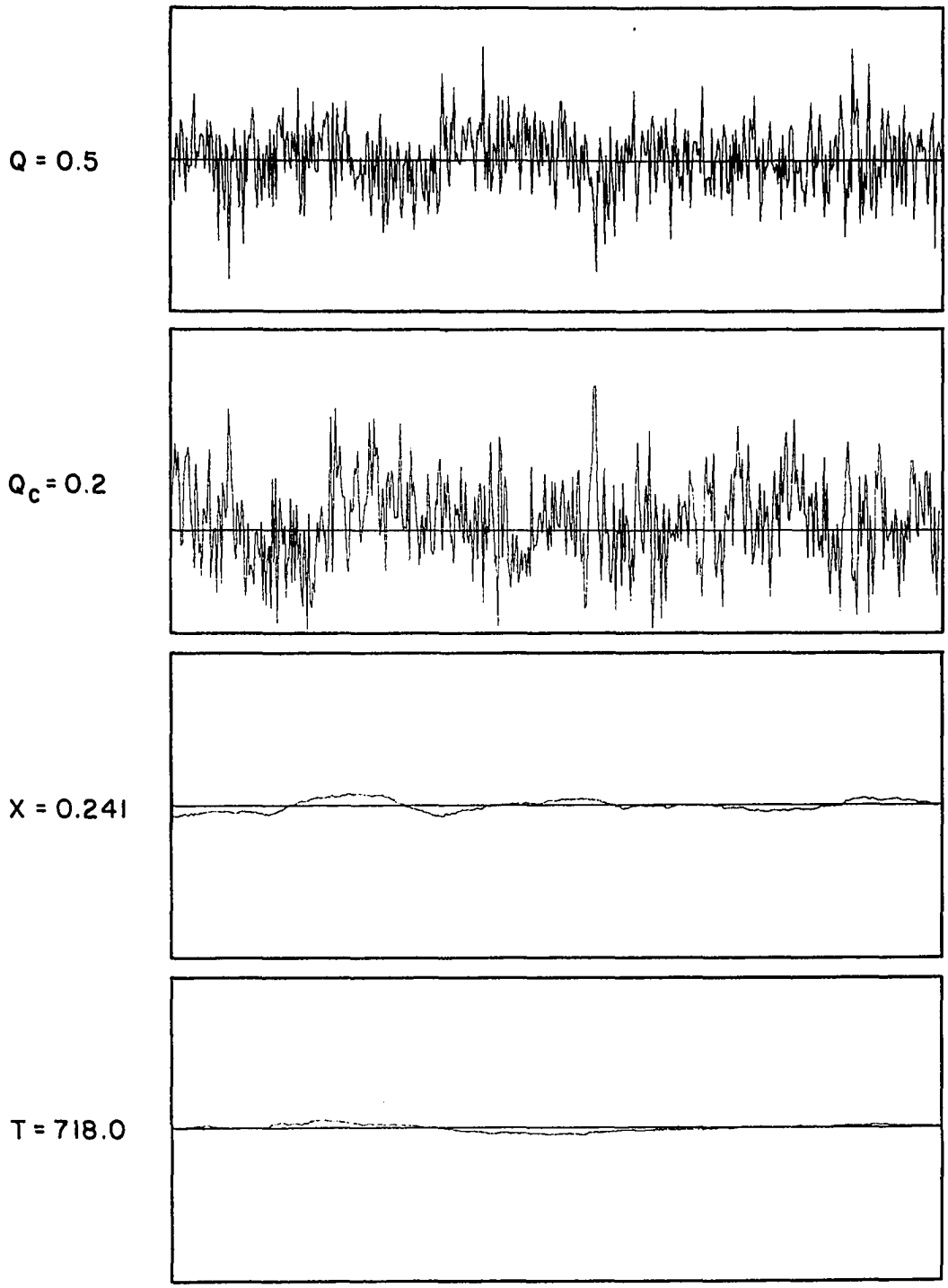

Figure 4.bb

Interacting and Noninteracting Control System Responses in the Presence of Measurement Noise

The mean deviation in the measurement noise vector was recorded for this example at 1.691×10^{-3}. By proper choice of the control parameters both systems are able to reduce the level of output error below that of the measurement noise. Similar results were recorded by West [W2] in the use of a relatively high MSQ noise level.

We have shown in this section that the advantages of using the interacting control scheme have been reinforced by the introduction of complexities into the control system. In this case, measurement noise present in the feedback loop has enabled us to shape an interacting control configuration which will yield the same level of output error with considerably less control effort than with noninteracting control. We have illustrated the results of a particular example in Figure 4.bb from the broad range of possibilities depicted by Figure 4.aa.

The Relative Effect of Time Delays on Control Performance

The configuration of a chemical process can be such that a monitored or manipulative variation in an input stream variable does not immediately effect the output variables. Such a time delay would be present in a process such as a distillation column or tubular reactor where input-disturbance measurement devices are located well upstream from the actual process itself. Thus, a monitored variation in an input variable at time t would not actually be experienced by the process until time $t+\tau$, where τ is the time lapse

between measurement and entrance of the variation into the process. Another type of time delay that could be present is control delay. Here there is a time lag between measurement of the output variables (in the case of feedback control) or measurement of the input disturbances (in the case of predictive or feedforward control) and the actual implementation of the resulting command signal. This delay might occur as the result of output measurement devices being located well downstream of the process or by virtue of a slow-acting control valve configuration.

Regardless of whether these time delays are the result of correctable inefficiencies or inherent limitations in the control system configuration, they would obviously have a detrimental effect on output regulation. The severity of the effect on control quality is a function not only of the control parameters and duration of the time delays, but more importantly, it is dependent upon the control system configuration itself. It is the purpose of this section to illustrate this dependence and, where possible, offer corrective measures.

The consideration of time delays in a multivariable chemical process can indeed be extremely complicated. The complexity arises not so much in determining the nature of the delays, but rather in eliminating the effects on control quality. This difficulty results from the possible existence of separate and unequal delays being associated

with each of a number of inputs and outputs.

For the sake of illustration, let us concern ourselves with a simple case. Consider a first order multivariable process such as that described by equations (1.1) and (1.2). Let the system be subject to equal process delays in each of the inputs. The process delay is represented by τ and no control delay is present. The time domain equations now have the form

$$\dot{\underline{y}}(t) = \underline{B}\underline{y}(t) + \underline{C}\,\underline{m}(t-\tau) + \underline{D}\underline{u}(t-\tau) \qquad (4.18)$$

where the vectors and matrices are defined as in Chapter I. Thus, the outputs at time t are functions of the control and disturbance inputs τ time units prior to t. Equation (4.18) can be transformed to yield the following more familiar Laplace domain representation of a time delay system:

$$Y(s) = P_M(s)e^{-\tau s}\, M(s) + P_D(s)e^{-\tau s}\, U(s) \qquad (4.19)$$

where

$$P_M(s) = [s\underline{I} - \underline{B}]^{-1}\underline{C} \qquad (4.20)$$

$$P_D(s) = [s\underline{I} - \underline{B}]^{-1}D \qquad (4.21)$$

For the case of interacting control, the time-domain optimal control law obtained from equation (2.10) has the following form:

$$m^*(t) = Q_D\, u(t) - Q_C\, y(t+\tau) \qquad (4.22)$$

The control and disturbance inputs will be delayed equally,

hence, their arguments are identical. However, the control signal must be implemented at time t to counteract a feedback error τ time units in the future at time $t+\tau$. Thus, the argument for the outputs is $t+\tau$. This obviously means that we must predict the form of the outputs in advance if we are to specify corrective action in sufficient time to have a regulative effect on the outputs. This can be carried out by considering the impulse response solution of equation (4.18) [W2].

$$\underline{y}(t+\tau) = \underline{\phi}(\tau)\,\underline{y}(t) + \int_{t-\tau}^{t} \underline{\phi}(t-\mu)\underline{Cm}(\mu)d\mu + \int_{t-\tau}^{t} \underline{\phi}(t-\mu)\underline{Du}(\mu)d\mu \tag{4.23}$$

The symbols are underlined to emphasize their vector-matrix nature. Thus, we have the output vector at $t+\tau$ entirely in terms of measurable or calculable quantities. The multivariable convolution form of equation (4.23) may now be written almost exactly as shown by West [W2] for the single-variable case.

$$\begin{aligned}\underline{y}(t+\tau) &= e^{+\underline{B}\tau}\,\underline{y}(t) + e^{+\underline{B}t} * \underline{Cm}(t) \\ &\quad - e^{+\underline{B}\tau}\, e^{-\underline{B}(t-\tau)} * \underline{Cm}(t-\tau) \\ &\quad + e^{+\underline{B}t} * \underline{Du}(t) - e^{+B\tau}\, e^{-\underline{B}(t-\tau)} * \underline{Du}(t)\end{aligned} \tag{4.24}$$

Here, however, we are dealing with matrix- rather than scalar-exponentials. Taking the Laplace transform of equation (4.24) and substituting this into the s-domain form of equation (4.22) yields, upon rearrangement, the optimal control signal in terms of the delay controllers $\underline{Q}_D^*(s)$ and $\underline{Q}_C^*(s)$.

$$\underline{M}^*(s) = \underline{Q}_D^*(s)\ \underline{U}(s) - \underline{Q}_C^*(s)\ \underline{Y}(s) \qquad (4.25)$$

The new controllers are calculated from the following matrix equations:

$$\underline{Q}_D^*(s) = [\underline{I} + \underline{Q}_C\underline{L}(s)\ \underline{P}_M(s)]^{-1}[\underline{Q}_D - \underline{Q}_C\underline{L}(s)\ \underline{P}_D(s)] \qquad (4.26)$$

$$\underline{Q}_C^*(s) = [\underline{I} + \underline{Q}_C\underline{L}(s)\ \underline{P}_M(s)]^{-1}\underline{Q}_C e^{+\underline{B}\tau} \qquad (4.27)$$

where $$\underline{L}(s) = [\underline{I} + e^{+\underline{B}\tau}\ e^{-\tau s}]. \qquad (4.28)$$

These multivariable delay controllers are similar to the univariant controllers specified by West [W2]. They appear at first glance to be quite complicated, but closer examination reveals their simple nature. The inverse matrix prefactor $[\underline{I} + \underline{Q}_C\underline{L}(s)\ \underline{P}_M(s)]^{-1}$ is common to both equations (4.26) and (4.27). In block diagram algebra, this represents a negative feedback loop around an identity matrix. Since it is present in both terms of equation (4.25), it need only appear once in the system block diagram. With this in mind, the block diagram representation for the system

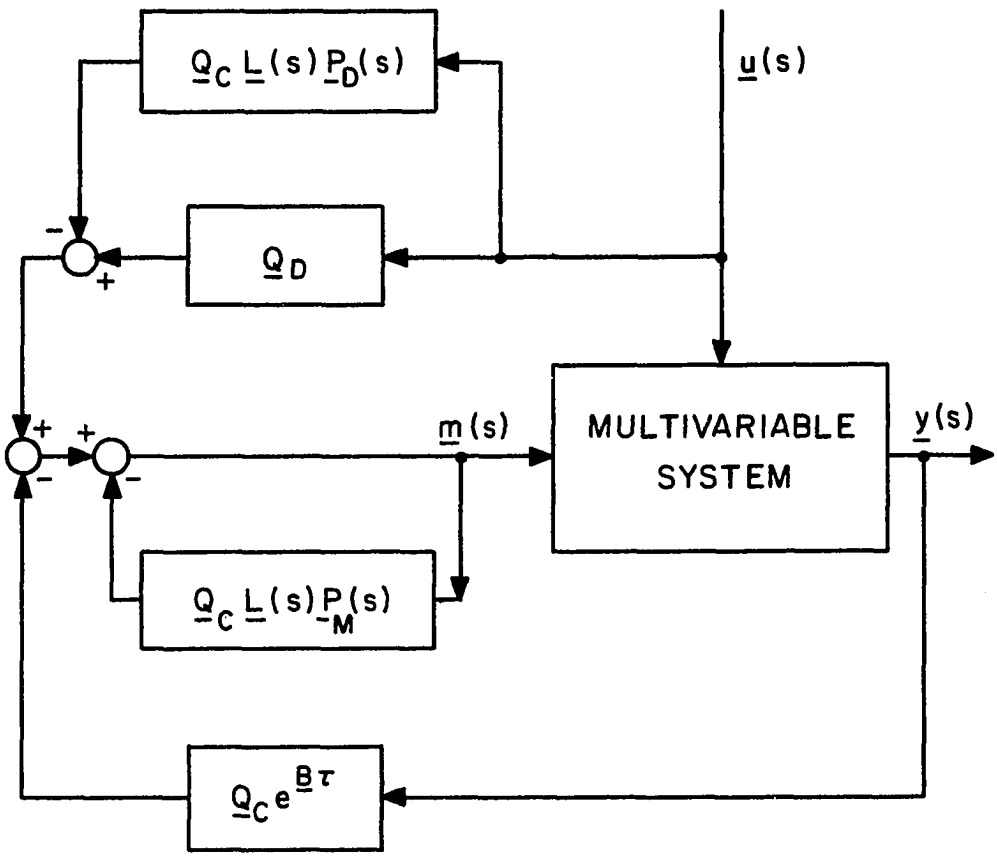

Figure 4.cc

Block Diagram Representation for System

with Delay Controllers

with delay controllers is seen to be that of Figure 4.cc. One should be reminded that the $\underline{Q}_D$ and $\underline{Q}_C$ matrices are the controllers as calculated for the zero-time-delay case.

Thus, for the case of no control delay and equal process delays in the effect of all inputs, we have developed equations for the optimal controllers which can be simulated by analog or digital computers from their block diagram configuration. The vector-matrix notation used in this section does not lend itself to the treatment of time-delay systems in which a number of unequal process delays are present. If large process delays are unavoidable and they cannot be forced to coincide in duration, the control system must be redesigned. The case of control delay may be handled in much the same manner as the case considered in this section.

The analysis thus far has been centered about the interacting control system. For the case of noninteracting control, further complications arise. The controllers in this case must not only regulate the outputs; they must also decouple the multivariable system. The complexity of this requirement is so great that to date no techniques are available to handle time-delay systems using Foster's method of noninteracting control. If one was able in some way to decouple the interacting system in the presence of the time delays, then in theory, single-variable techniques could be applied to "tune out" the delays from each univariant subsystem. The decoupling condition is great,

however, and there obviously remains much work to be done in this area.

Now that we have briefly discussed process delay systems and some corrective measures which can be taken, we now proceed to observe the relative effect of time delays on the degree of output attenuation possible by the interacting and noninteracting control systems. Of interest also is the corresponding control effort necessary in achieving a certain level of output error. We will begin the discussion of these effects with an analysis of Figure 4.dd.

This illustration shows the effect of various lengths of process input time delay on control performance. Families of curves are depicted for one and three second time delays. The effect of the introduction of a one second delay on output error and control effort can be seen by consideration of the zero-time-delay performance curves of Figure 4.s(a). The lowest level of output error possible with interacting control is increased by an order of magnitude with the delay. However, the process delay has a more serious effect on the noninteracting control system. The minimum output error is increased by two orders of magnitude.

The effect on interacting control configurations with control parameters yielding lower levels of control effort is almost nonexistent. The $\psi_{22} = 10^{-2}$ isogram shows little change, for instance. On the other hand, the $\psi_{22} = 10^{-4}$

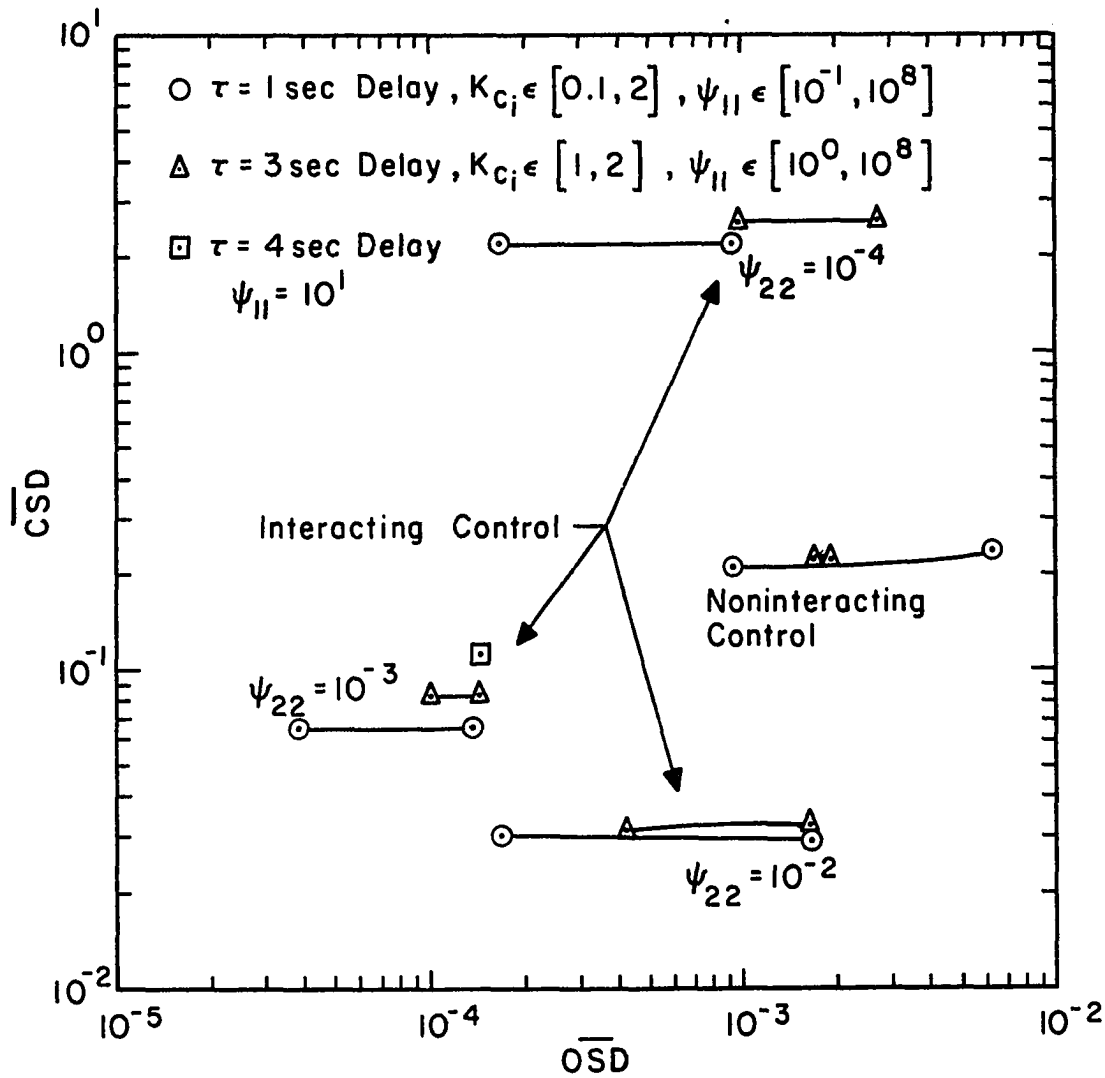

Figure 4.dd

Control Performance Curves for Time-Delay Systems

and 10^{-6} isograms show a large increase in control effort. In fact, the 10^{-6} curve can no longer be defined because control variable saturation has set in. This increase in control effort is explained by the low penalty factors. It should be noted that it is highly possible that a ψ_{22} slightly smaller than 10^{-3} might produce an even lower level of output error than that shown.

The effect on control effort expended by the noninteracting control system with time delay present is negligible. The sole effect is seen in an increased output error level. The points on the curve shift only slightly to the right, but the magnitudes of allowable feedback gains are greatly restricted. Noninteracting control feedback gains larger than about 2 result in system instability.

One might also notice that the output error interval spanned by any particular control parameter isogram has been reduced. This is due to the increase in the minimum admissible ψ_{11} penalty. Smaller ψ_{11} factors result in higher feedback gains and, consequently, control variable saturation as a result of system instability. The output error span is further reduced by the introduction of a still larger 3 second time delay. The region of stable operation is reduced resulting in increased minimum levels of output attenuation. In the case of noninteracting control, stable operation is almost impossible. This suggests that any further increase in process delay would result in

the noninteracting control system being incapable of regulating the outputs. This actually occurs for a 4 second time delay where unstable reactor operation cannot be erased by the noninteracting system controllers. Stable operation with good output regulation is still possible with the interacting control system. System performance with a penalty factor matrix $\psi = (10^{+1}, 10^{-3})$ is represented by the square dot at $(1.45 \times 10^{-4}, 1.12 \times 10^{-1})$. It may be possible to further reduce the level of output error by a different combination of penalty factors.

In this section, we have shown how the advantages of using interacting control are magnified in the presence of system time delay. The interacting control system is able to retain stable regulation of the outputs where the noninteracting control system fails. Further, preliminary development of interacting control compensators which would serve to tune out process delay was initiated. This could be a rewarding area of further research with interacting control systems.

CHAPTER V

MULTIVARIABLE CONTROL SYSTEMS

In this chapter we will discuss to a greater extent the steps involved in the synthesis of a multivariable control system and, by so doing, further explain the observed results of Chapter IV. The discussion will be oriented towards explanation of performance results in terms of properties characteristic of an interacting or a noninteracting control system. Thus, we hope to generalize the results of Chapter IV to cover a wider range of interacting and non-interacting control systems.

Multivariable Control Systems Synthesis

Thus far we have conducted a comparison of two vastly different control configurations. In both cases we began with an identical linear multivariable system which was characterized by input-output and output-output interaction. One of the control techniques, dynamic programming interacting control, operated directly upon the interacting system and attempted no interaction uncoupling. On the basis of the linear system model, the interacting controllers were proposed and applied directly to the interacting system. The other method of

control, internal-feedback-elimination noninteracting control, was saddled with a pre-regulation requirement--namely, interaction uncoupling. Prior to attempts at output regulation, the system was decoupled, transforming each output into a function of one measurable and one manipulatable input. What we want to discuss in this section are the various steps taken in the implementation of interacting and noninteracting control schemes. Where possible we will point out some of the limitations involved in a particular step. We hope to help one to decide between an interacting and a noninteracting control configuration for a given process.

The first step taken in the application of an interacting or noninteracting control technique is the identification of the system model. This was not a problem in the preceding investigation because the exact model parameters were specified before implementation began. However, in the control of a physical process, accurate determination of system parameters is greatly beneficial, but some model error will always occur as a result of these determinations. The sensitivity of the control system to these errors will depend upon the particular control scheme utilized. To state that either an interacting or a decoupling control scheme would have the advantage here would be impossible without a detailed analysis for the particular system.

There is, however, a point which should be brought out here. Obviously, the actual regulation of the outputs of

either control system is sensitive to model error, but in the case of the noninteracting control system there is an additional area of performance which is subject to these errors. We are speaking here of uncoupling performance. That is, how well do the compensators eliminate system interactions? Noninteracting control performance is directly dependent upon the satisfactory completion of this requirement. The hypothesis in controlling the outputs is that the system is uncoupled. If this requirement is not fulfilled due to model error, then the regulation of system outputs by noninteracting control already has difficulty. This is, of course, not sufficient evidence to condemn the noninteracting control system to a higher performance sensitivity to model error. On the other hand, when model error is small, dynamic uncoupling may, as Greenfield and Ward [G2] indicate, be the most suitable method of control, as the effects just discussed are not a major factor in this case.

After determination of the process model, the paths taken by the methods of control split. Let us discuss first the route taken by the noninteracting control technique. The first step is structural transformation. That is, the system model must be transformed into a configuration that will accommodate the method of decoupling. In the case of Foster's internal feedback elimination technique, this amounts to representing the system's internal structure in the form of Mesarovic's V-canonical representation. Then, the

intercouplings, represented by internal feedback loops, are eliminated by external feedback controllers. The structural analysis method of Greenfield and Ward [G3] represents the interactions as feedforward and feedback intercouplings which are consequently cancelled by feedforward and feedback controllers. The majority of the other direct noninteraction techniques use an approach equivalent to one of the above methods.

Once determination of controller parameters is made and the decoupling controllers are implemented, the paths of interacting and noninteracting control converge once again. At this point, the forms of the output regulators are determined and the regulators themselves are applied to the system. Control parameter adjustments must now be made. In the case of the noninteracting control scheme investigated, the adjustments must be made in light of stability considerations. Use of certain control parameters may result in an unstable control system. So attention must be paid to the poles of the control system transfer function in the case of noninteracting control. This is not a problem with the dynamic programming interacting controllers. They were designed with the objective of minimizing a particular performance index which, in turn, assured stability because the index itself is a Lyapunov function.

Finally, once satisfactory levels of output error and control effort are attained by the adjustment of controller

parameters, the multivariable control system design is complete. A diagrammatical approach to the preceding discussion is shown in Figure 5.a. The number of steps that can be avoided by the use of interacting control systems, where possible, is apparent from the illustration.

Interacting Versus Noninteracting Control

Amara [A1], Mesarovic [M8], and others have proven that conventional uncoupling of complex multivariable systems will in general result in a suboptimal design. This is true because many systems are dependent upon system interactions for optimum performance [B20]. We have shown in Chapter IV that these results are not restricted to complex systems. However, the superior performance of interacting control becomes more prominent as more system complexities--such as, measurement noise, time delays, and control saturation constraints--become major factors. Similar results were predicted by Bollinger and Lamb [B17] for the case of control element time lags. They pointed out that the presence of such delays necessitate additional derivative action. In the case of a V-canonical type noninteraction algorithm, this would result in uncoupling controllers which contain second derivative control modes that would generally be physically nonrealizable [G2]. Further, Luecke [L9] showed that first derivative control action can cause problems in the presence of measurement noise and model error. These very effects were observed in Chapter IV.

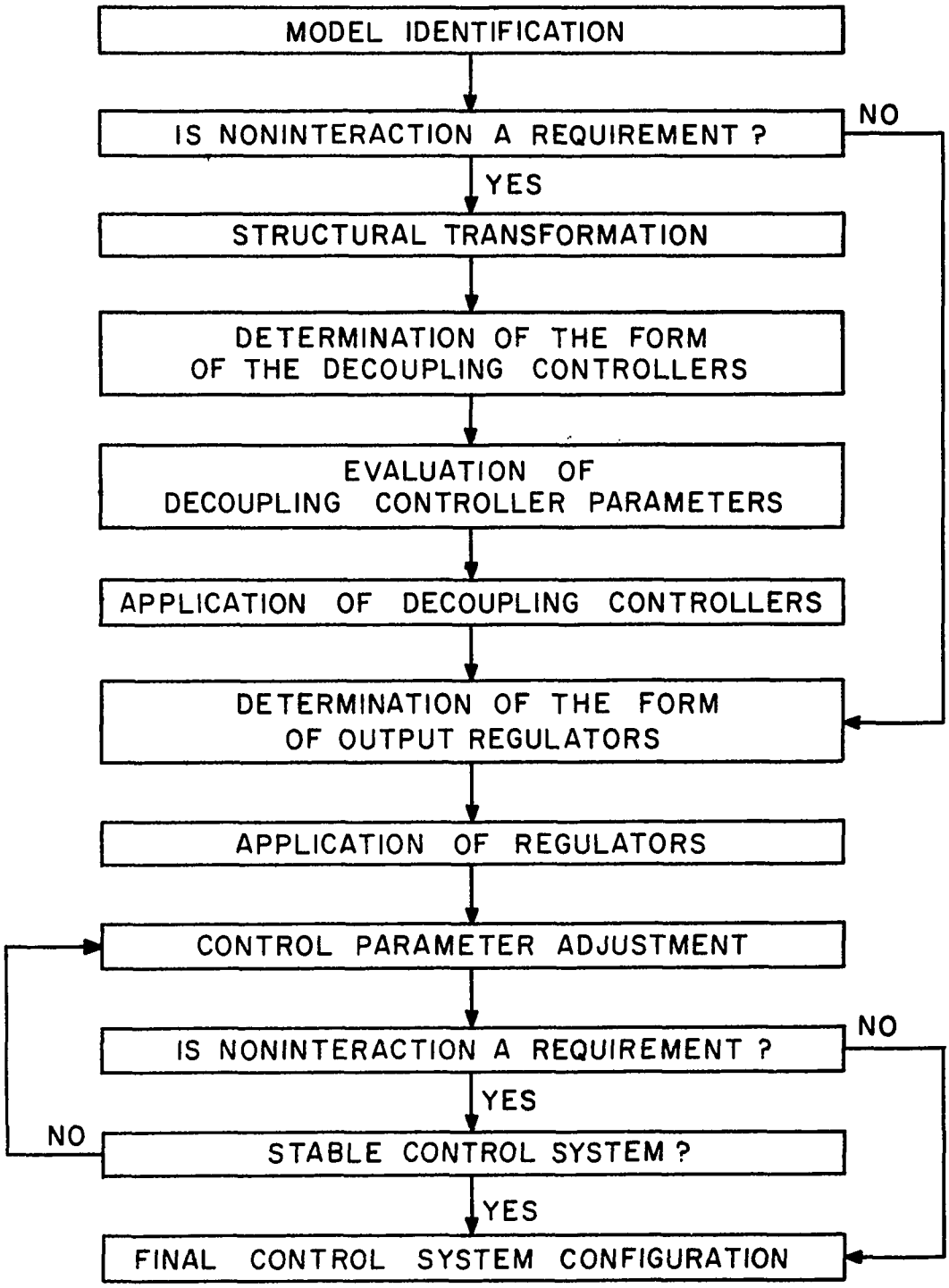

Figure 5.a

Simplification of Multivariable Control System Design

In this section, we will discuss briefly the results of Chapter IV from a more theoretical viewpoint. The discussion will be carried on in terms of properties characteristic of a particular class of control schemes. In this way we hope to broaden the application of those results obtained. The discussion will include arguments similar to those Greenfield [G2] used in his work on noninteracting control systems.

First, consider the presence of saturation constraints on the control variables. Restricting the range of a control signal below that specified by the optimal control law must certainly have an effect on control performance regardless of the particular control configuration utilized. In the case of uncoupling control, however, the control signals contain both regulatory and uncoupling components. Thus, restricting the control signals would restrict the effectiveness of the uncoupling procedure. If complete uncoupling is unattainable, then the independent regulation of the subsystems will be hindered. This indirect hindrance to output regulation is in addition to that resulting directly from the restraint on control action. Thus, the presence of saturation constraints in noninteracting control systems has a double effect on control performance. It is impossible to say, of course, that the resulting noninteracting control quality would be worse that that attainable with the corresponding interacting control system. This would depend upon the

severity of the constraints and upon the strength of system inter-relations.

If the constraints are not too tight, then it is likely that they will have little effect on the control performance of either control system. If the system intercouplings are weak, the importance of the uncoupling components of the control signals is lessened and the significance of the multiple effect mentioned earlier may be diminished. As the strength of system interactions increases, however, the advantage would shift in favor of interacting control. This superior performance was evidenced in Chapter IV.

Another significant point might be brought out here. The noninteracting control system considered in Chapter IV operated on the system by representing interactions in a feedback form. These interactions were then eliminated by feedback controllers. Consequently, if one could maintain the control signals within reasonable bounds by restricting only the feedforward portion of the control signals, the uncoupling procedure would be unaffected. This limitation on feedforward control would, of course, have a detrimental effect on the response of the outputs to input disturbances. Thus, a balance would need to be obtained on the distribution of the constraint satisfaction between feedforward and feedback control.

This reallocation of the responsibility for control constraint satisfaction between feedforward and feedback control elements seems like a profitable area for further research.

It would be most useful in the application of any V-canonical type noninteracting control technique. However, some application can be seen to a structural uncoupling control technique such as that proposed by Greenfield and Ward [G3]. In this type of noninteraction technique, system interactions are represented by both feedforward and feedback intercouplings. Thus, both the feedforward and the feedback control signals contain uncoupling components. In this case, consideration could be given to the relative strength of feedforward and feedback intercoupling loops. Then, the responsibility for control constraint satisfaction could be routed to either feedforward or feedback control loops responsible for the decoupling of weak inter-relations. The degradation of uncoupling performance would then be minimized.

Consider now the presence of measurement noise as a complicating factor in the multivariable system. Measurement noise (or its counterpart, limited instrument precision) will have a detrimental effect on the control performance of any control technique. Two instances of this effect were witnessed in Chapter IV. But here again, further complications arise in the case of noninteracting control. In the V-canonical uncoupling techniques, the presence of measurement noise produces unwarranted, random feedback control signals which could result in even higher random variations in the controlled output signals when feedback gains are high or derivative control modes are used [G2]. This would obviously necessitate lowering the feedback and derivative

gains which would result in poorer output response. Thus, a balance in these effects must be obtained through careful selection of the feedback and derivative gains. The derivative gains are no problem with structural uncoupling because the derivative modes are eliminated altogether from the feedback loop.

With measurement noise, we again run into the same problem of breakdown of dynamic uncoupling control. As the feedback control signals contain uncoupling information, elimination of system interactions depend upon accurate measurement of the controlled outputs. With structural uncoupling, feedback noise should be less of a problem since decoupling is not solely dependent upon measurement of the output signal. But here again the multiple effects of measurement noise upon noninteracting control would seem to predict an advantage for interacting control. Such an advantage was seen in the results of Chapter IV.

Let us now consider the case of model error. When model error is absent and none of the other system complexities mentioned are present, the system will be entirely and perfectly controlled by feedforward control. However, as model error increases, variations in the controlled outputs set in and feedback control takes on a portion of the control burden. But the feedback uncoupling and regulating controllers are directly affected by model error also. Large model error would result in the

complete breakdown of dynamic uncoupling, thus spoiling any attempt at independent control of the system outputs. Such would be the downfall of any uncoupling control technique in the presence of model error.

We have discussed, from a purely theoretical viewpoint, the effects of measurement noise, control saturation constraints, and model error on multivariable control system performance. The discussion is backed up by the results of Chapter IV. The overriding consideration in this chapter has been the breakdown of uncoupling control that occurs in the presence of these system complexities. Similar arguments can be given for the case of process time delays. All these factors seem to indicate the general superiority of interacting control in the regulation of complex multivariable systems with strong system interactions.

CHAPTER VI

CONCLUSIONS AND RECOMMENDATIONS

An investigation of interacting and noninteracting multivariable control systems has been completed. The study was directed at control configurations utilizing feedforward and feedback controllers in the regulatory control of multivariable systems subjected to gaussian random load disturbances. The prediction by some authors that interacting control will in general provide control performance superior to noninteracting control was verified. Further, it was shown that this superiority becomes more prominent as the complexity of the multivariable system increases.

The investigation centered about the regulatory control of an unstable chemical reactor. Feedforward control parameter calculational techniques were developed for the application of a newly-proposed interacting control technique to the regulation of the reactor outputs. The performance of the interacting control system was compared to that of a conventional V-canonical type noninteracting control technique by multivariable performance measures similar in nature to MSQ

output error and control effort indices used in single-variable analyses.

System nonidealities such as control saturation constraints, measurement noise, and process time delays were introduced into the reactor system. In every instance the interacting control system was able to produce lower output error levels with less control effort than the noninteracting control system. Linear control constraint capabilities are built into the interacting control technique in the form of penalty factor matrices thus facilitating the satisfaction of control constraints. By tightening down on these same penalty factors, limitations imposed by measurement noise and process delays are eased. Further, interacting controllers that compensate for process time delays can be simulated with the aid of block diagram algebra. It would appear that these same system nonidealities contribute to the breakdown of dynamic uncoupling which, in turn, is largely responsible for the poor performance of the noninteracting control system.

Recommendations

A great deal of work needs to be done on multivariable techniques for the handling of ever-present system non-idealities which are responsible for many of the problems associated with the implementation of multivariable control techniques. For the interacting control system, some work has begun in the area of process time delay compensation.

Controller computational problems must be worked out for the delay controllers described here.

With the V-canonical type noninteracting control technique, some meaningful work might be done in the area of satisfaction of control saturation constraints. The routing of restraint responsibility to the feedforward control loop as discussed in Chapter V could satisfy control constraints without producing a breakdown in dynamic uncoupling. This would undoubtedly improve noninteracting control performance. With the structural uncoupling techniques, the situation would be somewhat more complicated. However, here again, control restraint responsibility could be routed to those control loops whose task it is to decouple the weaker system interrelations. The resulting loss in uncoupling capabilities would then be of less importance.

The multivariable servo-control problem could be attacked from opposing interacting and noninteracting control viewpoints. Similarly, work should be done in the area of control of multivariable sampled-data systems.

BIBLIOGRAPHY

A1. Amara, R. C. "The Linear Least Squares Synthesis of Multivariable Control Systems," AIEE Transactions Vol. 78, pp. 115-119, 1959.

A2. Aoki, M. Optimization of Stochastic Systems, New York: Academic Press, 1967.

A3. Ariaratnam, S. T. and Loh, N. K. "Optimal Control of Linear Stochastic Systems," Int. J. Control, Vol. 6, No. 1, pp. 51-64, 1967.

A4. Aris, R. and Amundson, N. R. "An Analysis of Chemical Reactor Stability and Control," Chem. Engr. Sci., Vol. 7, p. 121, 1958.

A5. Aris, R. and Amundson, N. R. "Stability of Some Chemical Systems under Control," Chem. Engr. Prog., Vol. 53, p. 227, 1957.

A6. Athans, M. and Falb, P. L. Optimal Control. New York: McGraw Hill, Inc., 1966.

B1. Balas, L. F. "Digital Simulation of Low-Pass Gaussian Noise," Digital Simulation Techniques, pp. 110-112, 1969 (March).

B2. Barkelew, C. H. "Stability of Chemical Reactors," Chem. Eng. Prog. Symposium Ser. No. 25, Vol. 55, 1959.

B3. Bellman, R. Dynamic Programming. New Jersey: Princeton University Press, 1957.

B4. Bellman, R. E. and Dreyfus, S. E. Applied Dynamic Programming. New Jersey: Princeton University Press, 1962.

B5. Bellman, R. and Kalaba, R. Dynamic Programming and Modern Control Theory. New York: Academic Press, 1965.

B6. Bellman, R. Introduction to the Mathematical Theory of Control Processes, Vol. 1, New York: Academic Press, 1967.

B7. Bellman, R. E. Introduction to Matrix Analysis. New York: McGraw-Hill Inc., 1960.

B8. Bellman, R. and Kalaba, R. Mathematical Trends in Control Theory. New York: Dover Publications, Inc., 1964.

B9. Bellman, R. Perturbation Techniques in Mathematics, Physics, and Engineering. New York: Holt Publishing Co., 1964.

B10. Bendat, J. S. Principles and Application of Random Noise Theory. New York: John Wiley and Sons, Inc., 1958.

B11. Berger, J. S. "A Study of Chemical Reactor Stability and Control by Liapunov's Direct Method," Ph.D. Dissertation, University of Illinois, Urbana, Illinois, 1965.

B12. Bershad, N. J. "Stability of Linear Systems with Gaussian Random Parameters," Ph.D. Dissertation, Rensselaer Polytechnic Institute, Troy, New York, 1962.

B13. Bilous, O. and Amundson, N. R. "Chemical Reactor Stability and Sensitivity," AIChE Journal, Vol. 1, p. 121, 1955.

B14. Bilous, O. and Block, H. D. and Piret, E. L. "Control of Continuous-flow Chemical Reactors," AIChE Journal, Vol. 3, p. 248, 1957.

B15. Birta, Lou. "The Relative Performance of Interacting and Non-Interacting Systems," Case Institute of Technology, Systems Research Center Report, June, 1963.

B16. Bohn, E. V. "Design and Synthesis Methods for a Class of Multivariable Feedback Control Systems Based on Single-Variable Methods," AIEE Transactions, Vol.

B17. Bollinger, R. E. and Lamb, D. E. "Multivariable Systems and Analysis and Feedforward Control," I & E. C. Fundamentals, Vol. 1, No. 4, p. 245, 1962, 1962.

B18. Brennen, R. D. and Linebarger, R. N. "An Evaluation of Digital Analog Simulation Languages," Proc. of IFIP Congress 65, London: Spartan Books and Macmillan and Co., Ltd., 1965.

B19. Bristol, E. H. "On a New Measure of Interaction for Multivariable Process Control," IEEE Trans. on Automatic Control, Vol. AC-11, No. 1, p. 133-135, January, 1966.

B20. Brockett, R. "The Control of Linear Multivariable Systems," Case Institute of Technology, Systems Research Center, Report No. 7-A-62-7, 1962.

B21. Buckalo, Andrew F. "Explicit Conditions for Controllability of Linear Systems with Time Lag," IEEE Transactions on Automatic Control, Vol. AC-13, No. 2, April, 1968.

C1. Caughey, T. K. "On the Stability of Random Systems," J. Acoust, Soc. Amer., Vol. 32, No. 10, p. 1356, 1960.

C2. Chang, S. S.L. Synthesis of Optimum Control Systems. New York: McGraw-Hill Inc., 1961.

C3. Chatterjee, H. K. "Multivariable Process Control," I. F. A. C., Moscow, pp. 132.

C4. Chen, K. and Mathias, R. A. and Sauter, D. M. "Design of Noninteracting Control Systems Using Bode Diagrams," A. I. E. E. Transactions, p. 336, January, 1962.

C5. Cox, D. R. and Miller, H. D. The Theory of Stochastic Processes. New York: John Wiley & Sons, Inc., 1965.

D1. Derusso, P. M. and Roy, R. J. and Close, C. M. State Variables for Engineers. New York: John Wiley & Sons, Inc., 1965.

D2. Dorato, P. "On Sensitivity in Optimal Control Systems," I. E. E. E. Trans. on Automatic Control, AC-8, p. 256, 1963.

F1. Fitzpatrick, T. J. and Law, V. J. "Noninteracting Control for Sampled Data Systems Parts I and II," New Orleans, Louisiana: Tulane University, 1968.

F2. Fitzpatrick, T. J. Ph.D. Dissertation, Tulane University, New Orleans, Louisiana, 1967.

F3. Foster, R. D. and Stevens, W. F. "A Method for the Noninteracting Control of a Class of Linear Multivariable Systems," A. I. Ch.E. Journal, Vol. 13, No. 2, pp. 334-339, March 1967.

F4. Foster, R. D. and Stevens, W. F. "An Application of Noninteracting Control to a Continuous Flow Stirred-Tank Reactor," A.I.Ch.E. Journal, Vol. 13, No. 2, pp. 340-345, March 1967.

F5. Franklin, J. N. "Deterministic Simulation of Random Processes," Math. Comput., Vol. 17, pp. 28-59,1963.

F6. Fuller, A. T. "The Replacement of Saturation Constraints by Energy Constraints in Control Optimiation Theory," Int. J. Control, Vol. 6, No. 3, pp. 201-227, 1967.

G1. Gilbert, E. G. "The Decoupling of Multivariable Systems by State Feedback," S. I. A. M. J. Control, Vol. 7, No. 1, pp. 50-63, February, 1969.

G2. Greenfield, Gaylord G. and Ward, Thomas J. "Feedforward and Dynamic Uncoupling Control of Linear Multivariable Systems," A. I. Ch.E. Journal, Vol. 14, No. 5, p. 783, September, 1968.

G3. Greenfield, G. G. and Ward, T. J. "Structural Analysis for Multivariable Process Control," I. and E.C. Fundamentals, Vol. 6, p. 564, 1967.

G4. Greenfield, G. G. and Ward, T. J. "Structural and Terminal Analysis in Multivariable Process Control," Ind. Eng. Chem. Fundamentals, Vol. 6, p. 571, 1967.

H1. Hamming, R. W. Numerical Methods for Scientists and Engineers. New York: McGraw-Hill Inc., pp. 34 & 389, 1962.

H2. Harriot, Peter, Process Control. New York: McGraw-Hill Book Co., 1964.

H3. van Heerden, C. "Autothermic Processes," I. & E.C. Fundamentals, Vol. 45, No. 1, p. 1252, 1953.

H4. Heidemann, R. A. "Optimal Control of a Distillation Column Using an Empirical Mathematical Model," Ph.D. Dissertation, Washington, University, St. Louis, Missouri, 1966.

H5. Heltzmann, J. M. and Horing, S. "The Sensitivity of Terminal Conditions of Optimal Control Systems to Parameter Variations," I. E. E. E. Trans. on Automatic Control, AC-10, p. 420, 1965.

H6. Horowitz, I. M. "Synthesis of Linear, Multivariable Feedback Control Systems," I. R. E. Trans. on Automatic Control, Vol. 5, pp. 94-105, 1960.

H7. Hsieh, H. C. "Synthesis of Optimum Multivariable Systems by the Method of Steepest Descent," I.E.E.E. Trans. Applics. Ind., Vol. 66, pp. 125-130, 1963.

H8. Hull, T. E. and Dobell, A. R. "Random Number Generators," S.I.A.M. Review, Vol. 4, pp. 230-254.

I1. I. B. M. "Random Number Generation and Testing, " IBM Corporation, IBM Tech. Publ. Dept., White Plains, New York, IBM Reference Manual C20-8011.

I2. I. B. M. System/360 Continuous System Modeling Program (360A-CX-16X) - User's Manual. IBM Corporation, 1968.

J1. Jeffrey, A. "The Stability of Interacting Control Systems," Proc. I. F. A. C. Congress, London: Butterworths Scientific Publ., p. 126-131, 1960

J2. Johnson, C. D. and Gibson, J. E. "Optimal Control with Quadratic Performance Index and Fixed Terminal Time," I.E.E.E. Trans. on Automatic Control, Vol. AC-9, Oct., No. 4, pp. 355-360,1964.

K1. Kalman, R. E. "Contributions to the Theory of Optimal Control, " Bo. Soc. Mat. Mex., Vol. 5, pp. 102-119.

K2. Kalman, R. E. and Bertram, J. E. "Control Systems Analysis and Design via the Second Method of Lyapunov," J. Basic Eng., A.S.M.E. Paper 59-Nac-2, pp. 371-400, August, 1959.

K3. Kalman, R. E. "The Theory of Optimal Control and the Calculus of Variations," University of California Press, Symposium on Mathematical Optimization Techniques, Santa Monica, California, 1963.

K4. Kang, H. S. "On the Design of Interacting Multivariable Systems," Int. J. Control, Vol. 8, No. 5, pp. 425-439, 1968.

K5. Kavanagh, R. J. "The Application of Matrix Methods to Multivariable Control Systems," J. Franklin Institute, Vol. 262, pp. 349-367, 1956.

K6. Kavanagh, R. J. "Multivariable Control System Synthesis," Trans, A. I. E. E., Vol, II, pp. 425-429, 1958

K7. Kermode, R. I. and Stevens, W. F. "Dynamic Behavior of a Continous Stirred-Tank Reactor," Can. J. Chem. Engr., Vol. 39, pp. 81-85, 1961.

K8. Koivo, A. J. "Performance Sensitivity of Dynamical Systems," Proc. J.A.C.C., pp. 444-453, June, 1968.

K9. Kushner, H. J. Stochastic Stability and Control. New York: Academic Press, 1967.

L1. Laning, J. H. and Battin, R. H. Random Processes in Automatic Control. New York: McGraw-Hill Inc., 1956.

L2. Lapidus, L. and Luus, R. Optimal Control of Engineering Processes. Waltham, Mass.: Blaisdel Publishing Co., 1967.

L3. Lasalle, J. and Lefschetz, S. Stability by Liapunov's Direct Method. New York: Academic Press Inc., 1961.

L4. Lathi, B. P. Random Signals and Communication Theory. Scranton, Pennsylvania: International Textbook Co., 1968.

L5. Lefschetz, S. Stability of Nonlinear Control Systems. New York: Academic Press, 1965.

L6. Leondes, C. T. Advances in Control Systems. Vol. 4, New York: Academic Press, 1966.

L7. Lindgren, A. G. "A Note on the Stability and Design of Interacting Multivariable Control Systems," I.E.E.E. Trans. on Automatic Control, Vol. AC-11, No. 2, pp. 314-315, April, 1966.

L8. Liu, Shean-Lin. "Noninteracting Process Control," I & E.C. Process Design & Development, Vol. 6, No. 4, p. 460, October, 1967.

L9. Luecke, R. H. "Analysis of Optimal Composite Feedback-Forward Control," University of Oklahoma, Norman, Oklahoma, April 1966.

L10. Lukes, D. L. "Optimal Regulation of Nonlinear Dynamical Systems," S.I.A.M. J. on Control, Vol. 7, No. 1, pp. 75-100, February, 1969.

L11. Luyben, W. L. "Nonlinear Feedforward Control of Chemical Reactors," A. I. Ch. E. Journal, Vol. 14, No. 1, p. 37, 1968.

M1. Mathias, R. A. "Multivariable Controller Design by Signal-Flow Graph Techniques," I.E.E.E. Trans. on Automatic Control, p. 283, October, 1963.

M2. Meditch, J. S. "Minimum Mean-Square Error Stochastic Linear Control," Int. J. Control, Vol, VIII, No. 5, pp. 441-456, November, 1968.

M3. Mehra, Raman K. "Digital Simulation of Multidimensional Gauss-Markov Random Processes," I.E.E.E. Trans. on Automatic Control, Vol. AC-14, No. 1,

M4. Merriam, C. W., III. "A Class of Optimum Control Systems," J. Franklin Institute, Vol. 267, No. 4, April, 1959.

M5. Merriam, C. W., III. Optimization Theory and the Design of Feedback Control Systems. New York: McGraw-Hill Inc., 1964.

M6. Mesarovic, M. D. The Control of Multivariable Systems. New York: MIT Press and John Wiley & Sons, Inc., 1960.

M7. Mesarovic, M. D. "Control of Multivariable Systems," International Federation on Automatic Control, Moscow, pp. 100-105, 1960

M8. Mesarovic, M. D. and Lefkowitz, I. "Interacting Control," Case Institute of Technology, Systems Research Center Report No. 9-A/C-62-9,1962.

M9. Mesarovic, M. D. and Birta, L. "Synthesis of Interaction in Multivariable Control Systems," Automatica; Pergamon Press, Vol. 2, pp. 15-39, 1964.

M10. Mitchell, D. S. and Webb, C. R. "A Study of Interaction in a Multi-loop Control System," Prox. I.F.A.C. Congress, London: Butterworths Scientific Publication, pp. 142-152, 1960.

M11. Mix. D. F. Random Signal Analysis. Reading, Mass: Addison-Wesley Publishing Co., 1969.

M12. Morgan, B. S., Jr. "Synthesis of Linear Multivariable Systems by State-Variable Feedback," I.E.E.E. trans. on Automatic Control, p. 405, 1964.

M13. Morgan, B. S., Jr. "Noninteracting Contro," Joint Automatic Control Conference, pp. 468-472, 1964.

M14. McLane, P. J. and Graefe, P. W. U. "Optimal Regulation of a Class of Linear Stochastic Systems Relative to Quadratic Criteria," Int. J. Control, Vol. V, No. 2, pp. 135-143, February, 1967.

N1. Newton, G. and Gould, L. A. and Kaiser, J. F. Analytical Design of Linear Feedback Controls, New York: John Wiley and Sons, Inc., 1957.

N2. Nishida, F. "Synthesis of Multivariable Control Systems by Means of Sampled-Data Compensations," I.F.A.C., Moscow, 1960.

O1. Ogata, K. State Space Analysis of Control Systems. New York: Prentice Hall, Inc., 1967.

P1. Pagurek, B. "Sensitivity of the Performance of Optimal Control Systems to Plant Parameter Variations," I.E.E.E. Trans. on Automatic Control, AC-10, p. 178, 1965.

P2. Paiewonsky, B. "Optimal Control: A Review of Theory and Practice," A.I.A.A., Vol. 3, pp. 1985-2006, 1963.

P3. Papoulis, A. Probability, Random Variables, and Stochastic Processes. New York: McGraw-Hill Inc., 1965.

P4. Peschon, John. Disciplines and Techniques of Systems Control. New York: Blaisdell Publishing Co., 1965.

P5. Peterson, E. L. Statistical Analysis and Optimization of Systems. New York: John Wiley and Sons, Inc., 1961.

P6. Planchard, J. A., Jr. "Implementation of Noninteracting Control in a Continuous Multivariate System," Dissertation Abstracts, Vol. 28, p. 3692-B, Tulane University, 1967.

P7. Porter, W. A. "Sensitivity Problems in Linear Systems," I.E.E.E. trans. on Automatic Control, AC-10, p. 301, 1965.

R1. Reid, W. T. "A Matrix Differential Equation of the Riccati Type," American Journal of Mathematics, Vol. 68; pp. 237-246, 1946.

R2. Rekasius, Z. V. "Design of Noninteracting Controls for Linear Multivariable Plants," Technol. Institue, Northwestern University, Evanston, Illinois

R3. Rice, S. O. "Mathematical Analysis of Random Noise," Bell System Tech. J., Vol. 23, pp. 282-332, July, 1944; Vol. 24, pp. 46-156, January, 1945.

S1. Sage, A. P. Optimum Systems Control. Englewood Cliffs, New Jersey: Prentice Hall Inc., 1968

S2. Samuels, J. C. "On the Mean Square Stability of Random Linear Systems," I. R. E. Trans. Inform. Theory, Vol. 5, pp. 248-259, May, 1959.

S3. Samuels, J. S. and Eringen, A.C. "On Stochastic Linear Systems," J. Math. Phys., Vol. 38, No. 2, pp. 83-103, 1959.

S4. Samuels, J. C. "On the Stability of Random Systems and the Stabilization of Deterministic Systems w/ Random Noise," J. Acoust. Soc. Amer., Vol. 32, No. 5, pp. 594-601, 1960.

S5. Sarma, V. V. S. and Deekshatulu, B. L. "Performance Evaluation of Optimal Linear Systems," Int. J. Control, Vol. V, No. 4, pp. 377-385, April, 1967.

S6. Seinfeld, J. H. and Gavalas, G. R. and Hwang, M. I. & E.C. Fundamentals, Vol. 8, No. 2, pp. 257-262, May, 1969.

S7. Siebenthal, C. D. "Some Topics in the Optimal Control," University of Minnesota, 1963.

S8. Sirisena, H. R. "Optimal Control of Saturating Linear Plants for Quadratic Performance Indices," Int. J. of Control, Vol. VIII, No. 1, p. 65-87, July, 1968.

S9. Sivan, Raphael and Shalvi, Shlomo. "On the Existence of Optimal Solutions for the Linear System Quadratic Cost Problem," I.E.E.E. Transactions on Automatic Control, Vol. AC-13, No. 4, April, 1968.

S10. Smith, N. P. "Time Optimal Control for a Class of Common Random Disturbances," Defense Documentation Center, MIT, Lexington, Mass., February 2, 1968.

S11. Solodovnikov, V. V. Introduction to the Statistical Dynamics of Automatic Control Systems. New York: Dover Publications, Inc., 1960 [First published in USSR, 1962.].

S12. Sprague, C. Fremont, III. "On the Reticulation Problem in Multivariable Control," I.E.E.E. Transactions on Automatic Control, Vol. AC-9, Oct. 1964, No.4, pp. 398-405, 1964.

S13. Sutcliffe, H. and Tomlinson, G. H. "A Low-frequency Gaussian White-Noise Generator," Int. J. Control, Vol. VIII, No. 5, pp. 457-471, November, 1968

S14. Sworder, D. D. "On the Control of Stochastic Systems," Intern. J. Control, Vol. 6, No. 2, pp. 179-188, 1967.

T1. Tomavic, Rajko. Sensitivity Analysis of Dynamic Systems. New York: McGraw-Hill Book Co., Inc., 1963.

T2. Tou, Julius T. Digital and Sampled-Data Control Systems. New York: McGraw-Hill Book Co., Inc., 1959.

T3. Tyler, J. S., Jr. and Tuteur, F. B. "The Use of a Quadratic Performance Index to Design Multivariable Control Systems," I.E.E.E. Transactions on Automatic Control, Vol. AC-11, No. 1, pp. 84-92, January, 1966.

W1. Weber, T. W. "Control of a Continuous-Flow Agitated-Tank Reactor," Cornell University, 1963.

W2. West, Harry Harding. "Optimal Feedforward-Feedback Control, Ph.D. Dissertation, The University of Oklahoma, 1969.

W3. Witsenhauser, H. "On the Sensitivity of Optimal Control Systems," I.E.E.E. Transactions on Automatic Control, AC-10, p. 495, 1965.

APPENDIX A

DYNAMIC PROGRAMMING INTERACTING CONTROL

This control scheme operates on the original interacting system utilizing linear optimum controllers obtained by the application of the dynamic programming algorithm. The feedforward-feedback configuration as used by West [W2] in the determination of the gain parameters of the optimal control law is considered here. The mathematical theory associated with dynamic programming optimization is reviewed in Chapter II.

To begin the discussion of the method consider linear, time-variant systems. If necessary, a linear approximation is used to fulfill this requirement thus producing only linear-optimum controllers in the subsequent calculations. A matrix representation of the linear process dynamics is used in the time domain. The method of transforming a given transfer function representation into this form is illustrated by West [W2]. The resulting system equations are:

$$\dot{y}(t) = By(t) + Cm(t) + Du(t) \qquad (A.1)$$

$$q(t) = Ay(t) \qquad (A.2)$$

where $y(t)$ = state variable vector

$m(t)$ = control variable vector

$u(t)$ = load disturbance vector

$q(t)$ = output state vector

and all variables are perturbations from a particular state reflected in the continuous, time-varying matrices A, B, C, and D in the case of a linearized system.

The optimization procedure requires the specification of a measure of performance. A quadratic, scalar performance index is used to simplify determination of certain parameters. Conditional means are used emphasizing the random nature of some inputs. The following description of the index points out the integral dependence on the present time t which is treated as a fixed value in the minimization procedure.

$$\overline{e(t)}^{t} = \int_{t}^{T} \left[\overline{\langle q(\sigma),\ \phi q(\sigma) \rangle}^{t} + \overline{\langle m(\sigma),\ \psi m(\sigma) \rangle}^{t} \right] d\sigma \qquad \text{(A.3)}$$

where T = terminal time

ϕ = output weighting matrix

ψ = command input penalty matrix.

It is necessary to establish the nature of the weighting and penalty matrices. To simplify calculations both matrices will be diagonal and constant. These limitations are not severe from a theoretical viewpoint and, although they are not absolutely necessary, they are very helpful computa-

tionally. The use of anything but a positive definite penalty matrix may lead to unrealistic, unbounded control system by producing positive feedback in the optimal control law. Avoiding this produces a limiting of the allowable signal and a closed set. The lesser restriction of a non-negative definite weighting matrix is also included in the derivation.

As in Chapter II, an instantaneous minimum performance index is defined by

$$E[\overline{y(\mu)}^t, \mu] = \min_{m(\mu)} \overline{e(\mu)}^t. \qquad (A.4)$$

The existence of the state and time as sole arguments of E has been verified by Bellman [B3]. A boundary condition on E can be obtained as

$$E[y(T), T] = 0 \qquad (A.5)$$

by considering the terminal time and the bounded nature of the integrand.

Applying the dynamic programming algorithm from Chapter II results in the following minimization equation:

$$\min_{m(\mu)} \left[\overline{\langle q(\mu), \phi q(\mu) \rangle}^t + \overline{\langle m(\mu), \psi m(\mu) \rangle}^t + \left(\frac{\partial E[\overline{y(\mu)}^t, \mu]}{\partial \overline{y(\mu)}^t} \right)^T \cdot \overline{\dot{y}(\mu)}^t \right] = \frac{\partial E[\overline{y(\mu)}^t, \mu]}{\partial \mu} \qquad (A.6)$$

The third term involves the transpose of the jacobian of E.

The solution of this equation for high-dimensional systems would pose severe problems for even modern computers. Thus some simplification must be introduced.

Merriam [M5] proposed a specific form for the minimum performance index in order to avoid such difficulties. The form recommended was simply a truncated Taylor series expansion with respect to the state variable. The unknown coefficients become the control parameters.

$$E[\overline{y(\mu)}^t, \mu] = J(\mu) - 2\left[\overline{(y(\mu)}^t\right]^T J(\mu) + \left[\overline{y(\mu)}^t\right]^T K(\mu)\overline{y(\mu)}^t \qquad (A.7)$$

where $K(\mu)$ = symmetric nxn matrix

$J(\mu)$ = n vector

$I(\mu)$ = scalar

Using equation (A.7) in equation (A.6) and differentiating, the resulting equation may be equated to zero for minimization. Rearranging this equation, the optimal control law is obtained.

$$m^*(t) = \psi^{-1}C^T J(t) - \psi^{-1}C^T K(t)\ \overline{y(t)}^t \qquad (A.8)$$

The optimal command signal is restricted to the allowable set M mentioned earlier.

Substituting $m^*(t)$ back into equation (A.6) one arrives at the following equations for the evaluation of the parameters J and K as obtained by West [W2].

$$\dot{J}(\mu) = K(\mu)\, C\psi^{-1}C^{T}J(\mu) - B^{T}J(\mu) + KD\overline{u(\mu)}^{t} \quad (A.9)$$

$$\dot{K}(\mu) = K(\mu)\, C\psi^{-1}C^{T}K(\mu) - B^{T}K(\mu) - A^{T}\phi A - K(\mu)B \quad (A.10)$$

The vanishing of the minimum performance index at T yields the boundary conditions

$$J(T) = 0;\ K(T) = 0 \quad (A.11)$$

The parameter I is neglected because of its absence in equation (A.8).

From equation (A.9) it is apparent that $J(\mu)$, being associated with the input disturbance, is related to the feedforward control portion of the configuration. Similarly, from equation (A.8), $K(\mu)$ must be associated with the feedback portion. Sufficiency to produce a unique optimum and the validity of the use of equation (A.7) is discussed by West [W2] and Peterson[P5]. Asymptotic stability in the large is assured because the minimum performance index is a Lyapunov function as shown by Merriam [M5].

Equation (A.9) involving the feedforward-related parameter $J(\mu)$ can be simplified because of the separability of the stationary gaussian signals considered [M5]. A representation for a separable signal is

$$\overline{u(\mu)}^{t} = \overline{U(\mu)} + U(\mu,t)\overline{u(t)}^{t}. \quad (A.12)$$

Because equation (A.9) is linear in $\overline{u(\mu)}^{t}$. $J(\mu)$ can be

written as the sum of solutions for the components of $\overline{u(\mu)}^t$.

Defining

$$J(t) = R(t) + \overline{S(t)} \tag{A.13}$$

equation (A.9) yields the two equations

$$\dot{R}(\mu) = [K(\mu)C\psi^{-1}C^T - B^T]R(\mu) + K(\mu)D\overline{U}(\mu) \tag{A.14}$$

$$\dot{\overline{S}}(\mu) = [K(\mu)C\psi^{-1}C^T - B^T]\overline{S}(\mu) + K(\mu)DU(\mu,t)\overline{u(t)}^t \tag{A.15}$$

$$\overline{S}(T) = 0; \; R(T) = 0. \tag{A.16}$$

In order to facilitate analysis of the resulting optimal control law, define

$$J(t) = R(t) + S(t)\overline{u(t)}^t. \tag{A.17}$$

This change throws equation (A.15) into the form

$$\dot{S}(\mu) = [K(\mu)C\psi^{-1}C^T - B^T]S(\mu) + K(\mu)DU(\mu,t) \tag{A.18}$$

Thus, the new parameters of equation (A.17) are resolved into differential equations (A.14) and (A.18) along with boundary conditions

$$S(T) = 0; \; R(T) = 0 \tag{A.19}$$

In view of equation (A.17) consider once again the optimal control law. Substituting (A.17) into (A.18) yields

$$m^*(t) = \psi^{-1}C^TR(t) + \psi^{-1}C^TS(t)\overline{u(t)}^t - \psi^{-1}C^TK(t)\overline{y(t)}^t \tag{A.20}$$

$m^* \varepsilon M$

Examining this equation one finds a steady-state term followed by the feedforward and feedback control signals respectively.

The computation of the optimal control signal is made more difficult due to the time-varying nature of the system matrices. Since most chemical processes may be amply described using constant system matrices, West hereafter restricts the synthesis to time-invariant systems. At this point the reader is referred to West [W2] for the method of calculation of the feedback parameter K. As can be seen from equation (A.10) this does involve the solution of a matrix Riccati equation. The calculational procedure for evaluating the feedforward parameter S is assigned to Appendix C of this dissertation. West's approach is modified here to apply to multiple-input systems.

From equation (A.3) it can be seen that the constant weighting matrix ϕ and the penalty matrix ψ actually impose energy constraints on the system. They may be regarded as Lagrange multipliers which imbed an integral energy constraint into the performance index. The reader is referred to Newton, Gould, and Kaiser [N1], Fuller [F6], and West for further discussion of the nature of these constraints.

Chapter IV contains a discussion of the method of determining suitable weighting and penalty matrices.

APPENDIX B

NONINTERACTING CONTROL BY INTERNAL FEEDBACK ELIMINATION

This multivariable control technique is strongly dependent upon system structural representations such as Mesarovic's V-canonical representation which applies to multivariable systems with an equal number of inputs and outputs. For wider application the representation needs to be extended to systems with an unequal number of inputs and outputs. Foster [F3] has done this for n-input, m-output linear multivariable systems where $n \geq m$. He refers to the structural representation developed as V'-canonical in deference to Mesarovic. Foster takes advantage of this structure to partially decouple the system into m univariant subsystems; each subsystem output remaining a function of only one manipulatable input and all outputs functions of a single measurable input. Then, by addition of final control elements, the system is completely decoupled and perfect control attempted.

The linear, multivariable system considered can be represented by the following matrix equation:

$$\dot{\bar{Y}}_{mx1}(t) = K_{mxn}\bar{X}_{nx1}(t) + N_{mxm}\bar{Y}_{mx1}(t) \qquad (B.1)$$

The superbars represent perturbations from steady state values and will be omitted in subsequent equations for the sake of simplicity. Attention is restricted to systems wherein

(a) all parameters are known and invariant,

(b) all n-inputs are either measurable or manipulatable, and

(c) the number of manipulatable inputs at least equals the number of outputs, thus enabling the control of each output.

Taking the Laplace transform of each member of equations (B-1) yields

$$R_{mxm}(s)Y_{mx1}(s) = K_{mxn}X_{nx1}(s) + N_{mxm}Y'_{mx1}(s) \quad (B.2)$$

which can be rearranged into P-canonical form

$$Y_{mx1}(s) = [[R_{mxm}(s) - N_{mxm}]^{-1}K_{mxn}]X_{nx1}(s) \quad (B.3)$$

$$= P_{mxn}(s)X_{nx1}(s) \quad (B.4)$$

for later reference.

Consider now the ith output. It is desired to transform the system in such a way as to make this output a function of simply the ith manipulatable input and the (m+1)th measurable input. This can be accomplished by converting the remaining inputs into internal feedback loops and eliminating these loops. As apparent from above, the resulting m subsystems will be dependent not only on

single inputs, but also on a common measurable input, hence not "completely" decoupled.

In order to accomplish this "partial" decoupling, it is necessary to have an equal number of inputs and outputs. Hence "virtual" outputs are incorporated into the system and defined by the following equation:

$$Y_{(n-m)x1}(s) = K^*_{(n-m)xn} X_{nx1}(s) \qquad (B.5)$$

The elements of the K* matrix are entirely arbitrary. Equation (B.5) can be appended to equation (B.4) thus yielding a square system-matrix.

The system can be represented now in V'-canonical form. Mathematically, the representation is

$$Y_{nx1}(s) = F_{nxn} X_{nx1}(s) + F^*_{nxn} V_{nxn} Y_{nx1}(s) \qquad (B.6)$$

which can be represented diagramatically as in Figure B.a. To partially decouple the system the final term in equation (B.6) must be eliminated. This would leave the first term, which can be written in expanded form as

$$\begin{vmatrix} y_1 \\ \vdots \\ y_m \\ \hline y_{m+1} \\ \vdots \\ y_n \end{vmatrix} = \begin{vmatrix} F_{11} & & 0 & F_{1,m+1} & & \\ & \ddots & & \vdots & & 0 \\ 0 & & F_{mm} & F_{m,m+1} & & \\ K_{m+1,1} & \cdots & & \cdots & K_{m+1,n} & \\ \vdots & & & & & \\ K_{n1} & \cdots & & \cdots & K_{nn} & \end{vmatrix} \begin{vmatrix} X_1 \\ \vdots \\ X_n \end{vmatrix} . \qquad (B.7)$$

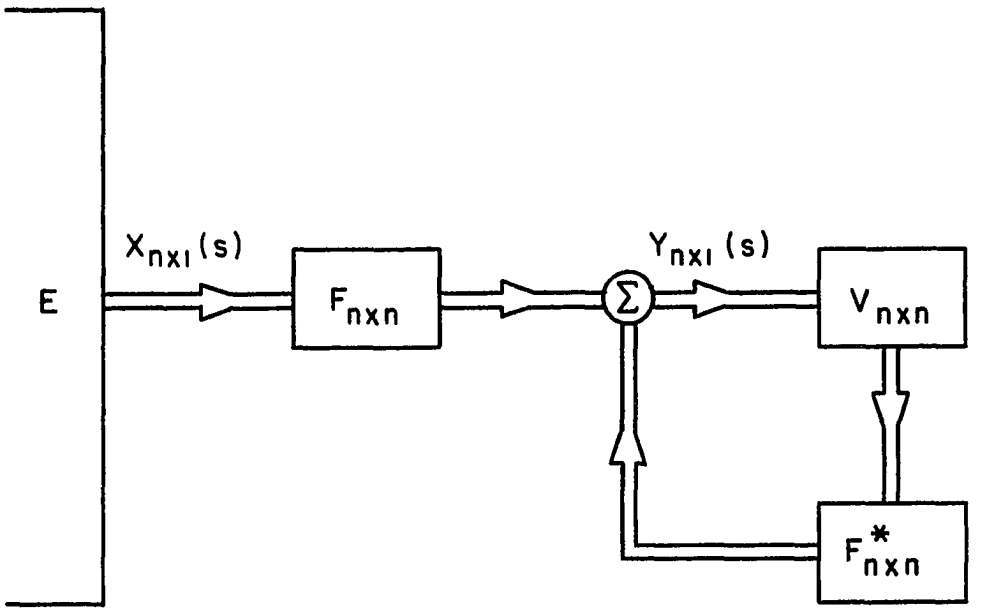

Figure B.a

A Block Diagram Representation of the V' Canonical Structure

This equation can be rewritten in terms of the pertinent outputs $y_1, \ldots, y_m$ as the system of equations

$$\begin{aligned} y_1 &= F_{11}X_1 + F_{1,m+1}X_{m+1} \\ &\vdots \\ y_m &= F_{mm}X_m + F_{m,m+1}X_{m+1} \end{aligned} \qquad \text{(B.8)}$$

By introducing appropriate feedback loops containing compensating controllers $C_{nxn} = -V_{nxn}$, the interaction term can be eliminated. The addition of this cancelling loop can be illustrated as in Figure B.b. The signals cancel at the second summing juncture allowing the system to be represented by equations (B.8). It can be seen from equations (B.7) that the virtual outputs are not by any means decoupled as there is no practical value in having them noninteracting. Hence those controllers used for this purpose may be discarded leaving m(n-2) elements in the original C_{nxn} controller matrix. Their positions in the matrix is shown in equation (B.9).

$$C_{mxn} = \begin{vmatrix} 0 & C_{12} & \cdots & C_{1m} & 0 & C_{1,m+2} & \cdots & C_{1n} \\ 0 & \ddots & & & \vdots & \vdots & & \vdots \\ C_{21} & \ddots & & \ddots & \vdots & \vdots & & \vdots \\ \vdots & \ddots & \ddots & & \vdots & \vdots & & \vdots \\ \vdots & & \ddots & 0 & \cdots & C_{m-1,m} & \vdots & \vdots & & \vdots \\ C_{m1} & C_{m,m-1} & & 0 & 0 & C_{m,m+2} & \cdots & C_{mn} \end{vmatrix} \qquad \text{(B.9)}$$

Once the system has been decoupled, feedforward and

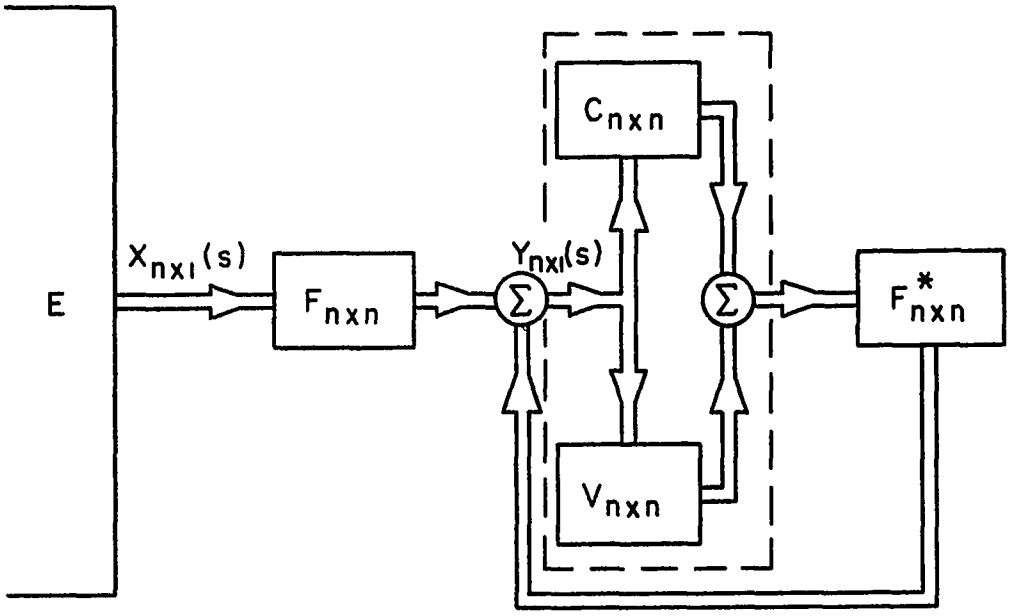

Figure B.b

System Block Diagram Representation after Application of Uncoupling Controllers

additional feedback controllers may be added to complete the decoupling process and attempt perfect control. Since the controllers operate independently of one another, each may be designed and manipulated to achieve a particular output response without affecting the remainder of the system as no such interactions exist. The form of the resulting m subsystems with final feedforward-feedback controllers is shown in Figure B.c. Mathematically, the system in Figure B.c can be represented as

$$y_i = \frac{[F_{i,m+1} + F_{ii}G_{ffi}]}{1 + F_{ii}G_{fbi}} X_{m+1} \qquad (B.10)$$

From equation (B.10) it can be seen that the ith output is a function of only the one measurable input, X_{m+1}. For any such input, requiring

$$G_{ffi} = \frac{F_{i,m+1}}{F_{ii}} \qquad (B.11)$$

yields perfect output control for y_i.

Because of the simple form of equation (B.8), it is possible that the feedforward controllers could be omitted altogether and still achieve adequate output control. The outputs could then be represented as

$$y_i = \frac{F_{i,m+1}}{1+F_{ii}G_{fbi}} X_{m+1}. \qquad (B.12)$$

Since the denominator of equation (B.10) remains the same, the stability analysis would be unchanged from one case to

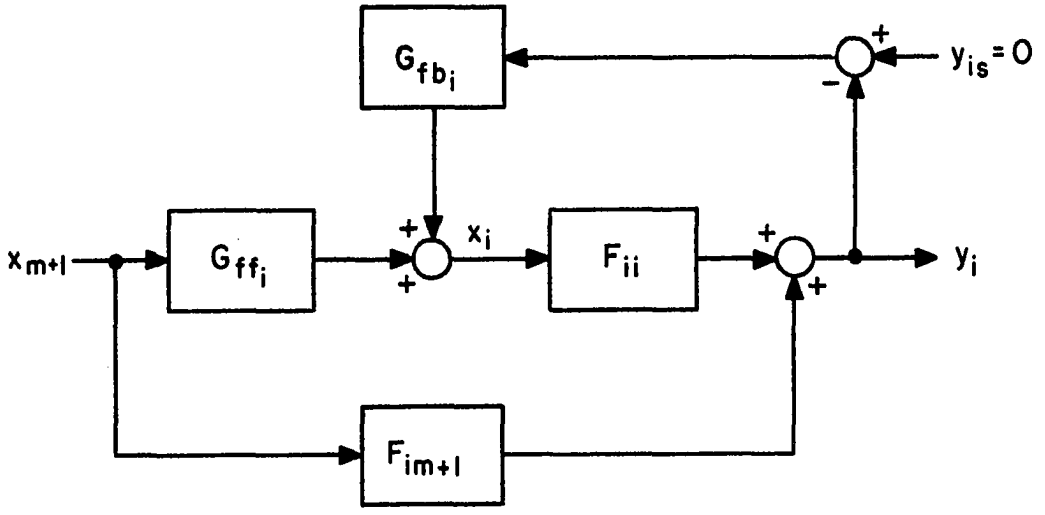

Figure B-c

The ith Univariant Subsystem with Final

Feedforward-Feedback Controllers

the next.

Now the unknown parameters F_{ij} and V_{ij} must be evaluated in terms of the only known parameters, the P_{ij} of the original system transfer function matrix. Since the P- and the V'-canonical structures must be equivalent, equation (B.5) appended to equation (B.4) can be equated to equation (B.6). Upon solution of a system of equations involving the inverse $P_{nxn}^{-1} = T_{nxn}$, a set of intermediate equations is obtained.

$$F_{ii} = \frac{T_{m+1,m+1}}{T_{ii}T_{m+1,m+1} - T_{m+1,i}\,T_{i,m+1}} \qquad (B.13)$$

$$F_{i,m+1} = \frac{-T_{i,m+1}}{T_{ii}T_{m+1,m+1} - T_{m+1,i}\,T_{i,m+1}} \qquad (B.14)$$

$$V_{ij} = \frac{T_{i,m+1}T_{m+1,j} - T_{ij}T_{m+1,m+1}}{T_{m+1,m+1}} \qquad (B.15)$$

where i = 1, 2, ..., m; j = 1, 2, ..., n; $j \neq i, m+1$. After considerable manipulation using general rules related to determinants, the final form of system components is determined. Let

$$D_i = [(-1)^{2(m+i+1)} M_{ii}]s + \left[\sum_{\substack{k=1 \\ k\neq i}}^{m} (-1)^{2m+3+k+i} M_{ki}N_{ki} - (-1)^{2(m+i+1)} N_{ii}M_{ii}\right] \qquad (B.16)$$

then

$$F_{ii} = \frac{J_{m+1,m+1}}{D_i} \tag{B.17}$$

$$F_{i,m+1} = \frac{-J_{m+1,i}}{D_i} \tag{B.18}$$

Then system interactions are represented by

$$V_{ij} = \frac{[(-1)^{2m+i+j+3} M_{ji}]s}{J_{m+1,m+1}} \qquad (j \leq m) \tag{B.19}$$

$$+ \frac{\left[\sum_{\substack{k=1 \\ k \neq j}}^{m} (-1)^{2m+2+j+k} N_{kj} M_{ki} - (-1)^{2m+i+j+3} N_{jj} M_{ji}\right]}{J_{m+1,m+1}}$$

$$V_{ij} = \frac{(-1)^{2m+3+j+1} M_{ji}}{J_{m+1,m+1}} \qquad (j \geq m) \tag{B.20}$$

The symbols J_{ij}, N_{ij}, and M_{ij} defined in the notation section are constant for any system. With this in mind, one can see the form of the decoupling controllers from equations (B.19) and (B.20) are simply amplifiers and proportional plus derivative controllers. Using conventional controllers as final control elements the physical realizability of the controllers necessary in this control scheme is established. The controller parameters

can be determined from consideration of the desired output response to a step change in load as discussed by Foster [F4].

APPENDIX C

CALCULATION OF THE FEEDFORWARD CONTROL PARAMETER

The differential equation for the feedforward parameter S was given in Appendix A as

$$\dot{S}(\mu) = [K(\mu)C\psi^{-1}C^T - B^T]S(\mu) + K(\mu)DU(\mu,t) \quad (A.18)$$

$$S(T) = 0 \quad (A.19)$$

The form of this equation suggests defining

$$P = [K(\mu)C\psi^{-1}C^T - B^T] \quad (C.1)$$

and pre-multiplying both sides of equation (A.18) by the integrating factor $e^{-P\mu}$. This procedure yields the following differential equation:

$$\frac{d}{d\mu}\left[e^{-P\mu}S(\mu)\right] = e^{-P\mu}K(\mu)DU(\mu,t) \quad (C.2)$$

This equation may now be integrated on the interval [t,T].

$$\int_t^T \frac{d}{d\mu}\left[e^{-P\mu}S(\mu)\right]d\mu = \int_t^T e^{-P\mu}K(\mu)DU(\mu,t)d\mu \quad (C.3)$$

Evaluation of the left side of equation (C.3) yields

$$e^{-Pt}S(t) = -\int_{t}^{T} e^{-P\mu}K(\mu)DU(\mu,t)d\mu \qquad (C.4)$$

Premultiplying by e^{Pt} results in the expression for S(t)

$$S(t) = -\int_{t}^{T} e^{P(t-\mu)}K(\mu)DU(\mu,t)d\mu \qquad (C.5)$$

According to Merriam [M5] and West the separable portion of the disturbances consists of the correlation functions for the signals. For stationary signals $U(\mu,t)$ can be written as $U(\mu-t) = U(\varepsilon)$, the functions being dependent on the time interval length rather than the times themselves. Recalling the constant steady state value of the feedback parameter K from Appendix A and using the above concepts, equation (C.5) may be written as follows:

$$S(t) = -\int_{0}^{T-t} e^{-P\varepsilon}KDU(\varepsilon)d\varepsilon \qquad (C.6)$$

Use of a very large terminal time ($T\to\infty$) produces the following equation for the feedforward parameter:

$$S = -\int_{0}^{\infty} e^{-P\varepsilon}KDU(\varepsilon)d\varepsilon \qquad (C.7)$$

Let us now examine the form of the separable component $U(\varepsilon)$. Expanding equation (A.12) for an n-input system results in the following matrix equation:

$$\begin{vmatrix} \overline{U_1(\mu)^t} \\ \vdots \\ \overline{U_n(\mu)^t} \end{vmatrix} = \begin{vmatrix} \overline{U}_1(\mu) \\ \vdots \\ \overline{U}_n(\mu) \end{vmatrix} + \begin{vmatrix} U_{11}(\varepsilon) & & 0 \\ & \ddots & \\ 0 & & U_{nn}(t) \end{vmatrix} \begin{vmatrix} \overline{U_1(t)^t} \\ \vdots \\ \overline{U_n(t)^t} \end{vmatrix} \tag{C.8}$$

The off-diagonal elements of $U(\varepsilon)$ are simply cross-correlation functions and consequently vanish for zero-mean, statistically independent disturbances. It is well known that stationary random signals exhibit an autocorrelation function that is exponential in the frequency of that signal. Thus the separable component $U(\varepsilon)$ has the form

$$U(\varepsilon) = \begin{vmatrix} e^{-\alpha_1 \varepsilon} & & 0 \\ & \ddots & \\ 0 & & e^{-\alpha_n \varepsilon} \end{vmatrix}$$

where α_i is the frequency of the $u_i(t)$ noise signal.

Now define columns of $U(\varepsilon)$ and S as $U_i^*(\varepsilon)$ and S_i^*, respectively. That is, let

$$u_i^*(\varepsilon) = \begin{vmatrix} 0 \\ \vdots \\ 0 \\ e^{-\alpha_i \varepsilon} \\ 0 \\ \vdots \\ 0 \end{vmatrix} = e_i \exp[-\alpha_i \varepsilon] \qquad (C.10)$$

where e_i is the ith unit vector, and

$$S_i^* = \begin{vmatrix} S_{1i} \\ \vdots \\ S_{ni} \end{vmatrix} \qquad (C.11)$$

From integral equation (C.7), the ith column of S is

$$S_i^* = \int_0^\infty e^{-P\varepsilon} KDU_i^*(\varepsilon) d\varepsilon \qquad (C.12)$$

or, expanding

$$S_i^* = -\int_0^\infty e^{-P\varepsilon} KDe_i e^{-\alpha_i \varepsilon} d\varepsilon \qquad (C.13)$$

$$= -\int_0^\infty e^{-[P+\alpha_i I]\varepsilon} KDe_i d\varepsilon \qquad (C.14)$$

Integrating and evaluating at the lower and upper integral limits, the equation for the calculation of the components of the feedforward parameter S is obtained.

$$S_{nxn} = [S_i^* \; . \; . \; . S_n^*] \tag{C.15}$$

where

$$S_i^* = - [KC\psi^{-1}C^T - B^T + \alpha_i I]^{-1} KDe_i \tag{C.16}$$

APPENDIX D

GAUSSIAN NOISE DIGITAL SIMULATION

The load disturbances considered in this dissertation are assumed to be gaussian in their statistical characterization. The optimum controllers are calculated on the basis of the nature of these disturbances. Thus, the load noise present in the control process simulation must possess certain pre-defined characteristics, such as a specific frequency, mean, and standard deviation. Without this correspondence between the simulated and the real process, the controllers could not be expected to perform their duty. How can such a specific gaussian signal be generated?

There does exist a near-infinite number of random number generators. Hull and Dobell [H8] have discussed and enumerated many of them. Whether the signals generated are truly random or not is yet another question and will not be considered here. One should be able, however, to generate a pseudo-random signal with the desired mean and standard deviation from any of those available. But it is intended to be simply a sequence of random numbers, not a gaussian signal at all.

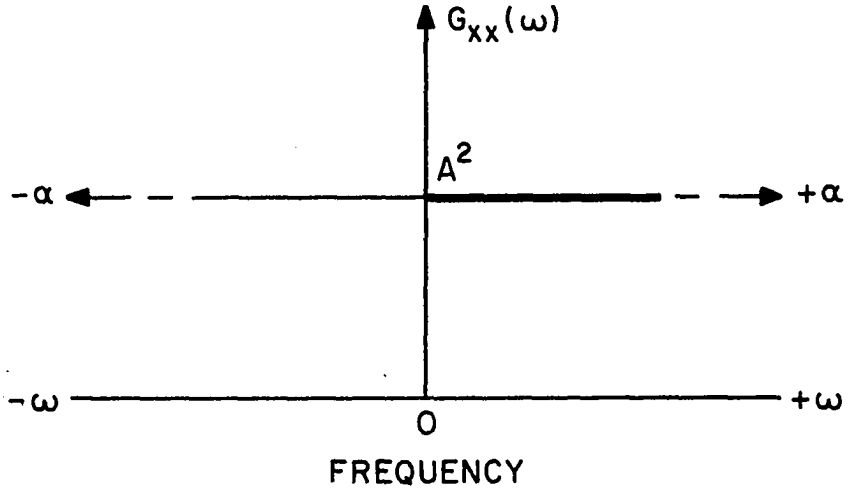

Figure D.a

Spectral Density of White Gaussian Noise

Balas [B1] has recently proposed and tested a digital method of generating a low pass gaussian signal. The method allows the specification of all three of the desired parameters. One must refer to Balas for the references to the lengthy derivation of the algorithm.

White gaussian noise with a uniform spectral density A^2 is used as a source (Figure D.a). The noise passes thru a low-pass filter such as that in Figure D.b. The time constant for the filter system is T = RC and its cutoff frequency is α(radians/second). Given that the transfer function for this system is

$$H(j\omega) = \frac{1}{1 + Tj\omega} \qquad (D.1)$$

the spectral density for the output is $|H(j\omega)|^2$ times the spectral density of the input which is a constant A^2. Some rearrangement will show the resemblence to the spectral density for gaussian noise with a frequency of α.

The algorithm itself is very straightforward. First, given the desired standard deviation σ, a computer standard deviation σ_N is calculated.

$$\sigma_N = \sigma[1 - \exp(-2\alpha|\tau|]^{1/2} \qquad (D.2)$$

The parameter τ is the sampling period. With this new standard deviation, the recursive equation for the sequence of gaussian random numbers is

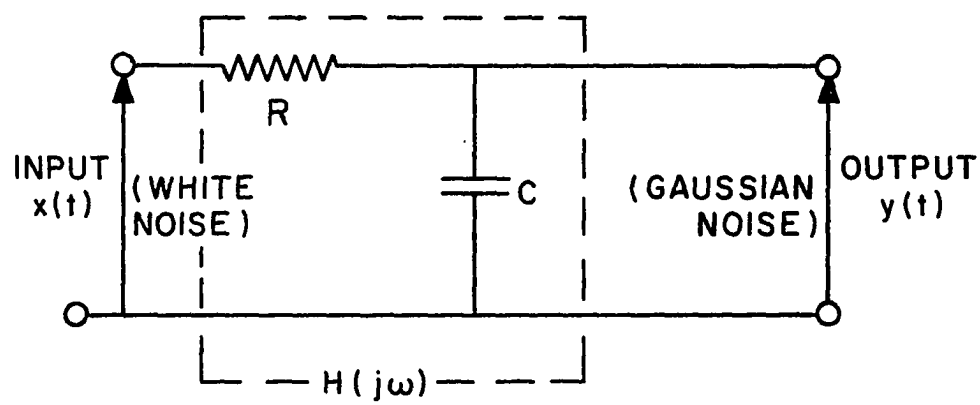

Figure D.b.

System Used to Filter White Noise

$$y_{i+1} = N_{i+1}(0,\sigma_N) + y_i \exp(-\alpha|\tau|) \qquad (D.3)$$

$N(0, \alpha_N)$ is a series of pseudo-random gaussian-distributed numbers generated by the S/360 GAUSS library subroutine.

This noise generator is used in the CSMP main program with τ, the sampling period, being the integration stepsize. The cutoff frequency α is then the occurrence frequency of the required noise signals.

FORTRAN PROGRAM LISTINGS

```
          ****CONTINUOUS SYSTEM MODELING PROGRAM****

     ***PROBLEM INPUT STATEMENTS***

TITLE    CONTINUOUS FLOW STIRRED-TANK REACTOR
/         DIMENSION TIA(40),XIA(40),QA(40),QCA(40),XA(40),TEA(40)
INITIAL
         SIGMT=6.9*SQRT(1.-EXP(-2.*FREQ1*TAU))
        SIGMX=0.00241*SQRT(1.-EXP(-2.*FREQ2*TAU))
INCON     X=.241,TE=718.
INCON           XN=0.,TN=0.
INCON           IRX=1,ITX=3
INCON IR1=5,IR2=7
CONSTANT FREQ1=1.5,FREQ2=1.
CONSTANT        V=100.,E=.45E+5,R=1.98,AP=.3E+12,...
                RC=60.,CC=1.,U=.286E-1,A=489.,...
                CP=1.,RH=60.,DH=-.2E+5,TC=520.,...
            XS=.24102,TS=718.00,XIS=.5,TIS=690.,QS=.5,QCS=.2
CONSTANT  TAU=.05
PARAMETER RP1=.0005,RP2=.1
PARAMETER XTL=-1.
***-3,-4***
PARAMETER QD11=.81745E-05,QD12=-.18944E+01,...
          QD21=.59067E-02,QD22=.65129,...
          QC11=.20833E+05,QC12=-.25453,...
          QC21=-.77282E+01,QC22=-.49512E+01
DYNAMIC
                XP1 =Q*(XI-X)/V
                XP=EXP(-E/(R*TE))
                XP2 =AP*XP*X
                X=INTGRL(.24102,XP1-XP2)
                TP1 =Q*(TI-TE)/V
                FN  =QC*RC*CC
                F   =2.*FN/(U*A)
                TP2N=2.*FN*(TE-TC)
                TP2D=V*CP*(F+1.)*RH
                TP2 =TP2N/TP2D
                TP3N=XP2*DH
                TP3 =TP3N/(RH*CP)
                TE=INTGRL(718.00,TP1-TP2-TP3)
                TI=TN+690.
                XI=XN+.5
*****CONTROLLER SEGMENT*****
PROCED RN1,RN2,X1,X2=NOISE(IR1,RP1,X,XS,IR2,RP2,TE,TS)
          RN1=GAUSS(IR1,0.,RP1)
                XN1=X-XS
                X1=XN1+RN1
          RN2=GAUSS(IR2,0.,RP2)
                XN2=TE-TS
                X2=XN2+RN2
ENDPRO
                OUTSO=(XN1/XS)**2+(XN2/TS)**2
```

```
                QINT=QUTSQ**.5
               MQUTIN=INTGRL(0.,QINT)
                U1   =TI-TIS
                U2   =XI-XIS
                FB1  =QC11*X1+QC12*X2
                FB2  =QC21*X1+QC22*X2
                FD1  =QD11*U1+QD12*U2
                FD2  =QD21*U1+QD22*U2
               LM1   =FD1-FB1
               LM2   =FD2-FB2
          M1=LIMIT(-.5,1.5,LM1)
          M2=LIMIT(-.2,.8,LM2)
                Q    =M1+QS
                QC   =M2+QCS
          INSQ=(M1/QS)**2+(M2/QCS)**2
          PI=INTGRL(0.,QUTSQ+INSQ)
                CINT=((M1/QS)**2+(M2/QCS)**2)**.5
               MCONIN=INTGRL(0.,CINT)
PROCED  QUTIN,CONIN=TERM(TIME,MQUTIN,MCONIN)
          IF(TIME) 9,9,10
        9 QUTIN=0.
          CONIN=0.
          GO TO 11
       10 QUTIN=MQUTIN/TIME
          CONIN=MCONIN/TIME
       11 CONTINUE
ENDPRO
PROCED    RX,RN = NOISE1(IRX,SIGMX,FREQ2,TAU,XN)
                RX=GAUSS(IRX,0.,SIGMX)
                RN=XN
               XN=RX+RN*EXP(-FREQ2*TAU)
ENDPRO
PROCED    TX,RTN = NOISE2(ITX,SIGMT,FREQ1,TAU,TN)
                TX=GAUSS(ITX,0.,SIGMT)
               RTN=TN
               TN=TX+RTN*EXP(-FREQ1*TAU)
ENDPRO
PROCED QUT1=RUN1(TIME,TI,XI,Q,QC,X,TE,KEEP,RN1,RN2)
          IF(TIME-210.) 30,12,12
       12 CONTINUE
          QUT1=TIME
          IF(KEEP-1) 30,20,30
       20 CONTINUE
          WRITE(2,100) TIME,Q,QC,X,TE,RN1,RN2
       30 CONTINUE
      100 FORMAT(3E11.4,2E11.5,2E11.4)
ENDPRO
TIMER FINTIM=240.,PRDEL=1.,DELT=.05
RANGE TI,XI,Q,QC,X,TE
PRINT TI,XI,Q,QC,X,TE,QUTIN,CONIN,PI
METHOD RKSFX
END
STOP
```

```
            ****CONTINUOUS SYSTEM MODELING PROGRAM****

      ***PROBLEM INPUT STATEMENTS***

TITLE    CONTINUOUS FLOW STIRRED-TANK REACTOR
/         DIMENSION Z(12),T1(6),T2(6)
INITIAL
          SIGMT=6.9*SQRT(1.-EXP(-2.*FREQ1*TAU))
          SIGMX=.00241*SQRT(1.-EXP(-2.*FREQ2*TAU))
           K11=(XIS-XS)/V
           K14=QS/V
           K21=(TIS-TS)/V
           K23=QS/V
                  FS=2.*QCS*RC*CC/(U*A)
                  E12=K14*K42/J33
                  U12=-(K22*K44*N12+K14*K42*N22)/J33
                  F21=-K21*K44/J33
                  U21=-(N21*(K11*K44-K41*K14)-N11*K21*K44)/J33
                  U14=K22*K14/J33
                  U24=-K21*K14/J33
                  EX=EXP(-E/(R*TS))
                  NP1=QS/V
                  NP2=U*A*FS/(V*RH*CP*(FS+1.))
                  NP3N=AP*E*DH*XS*EX
                  NP3D=RH*CP*R*TS**2
                  NP3=NP3N/NP3D
                  N11=-QS/V-AP*EX
                  N12=-AP*F*XS*EX/(R*TS**2)
                  N21=-AP*DH*EX/(RH*CP)
                  N22=-NP1-NP2-NP3
                  J31=K14*K22*K43-K14*K23*K42
                  J32=K14*K23*K41-K14*K21*K43-K11*K23*K44
                  GFF1=J31/J33
                  GFF2=J32/J33
NOSORT
           W1=1.-E12*K21+KC1*TD1*K11-U14*K41
           W2=1.+KC2*TD2*K22-U24*K42
           Z(1)=(U14*K42+F12*K22)/W1
           Z(2)=(U14*K43+E12*K23+GFF1)/W1
           Z(3)=(U14*K44-KC1*TD1*K14)/W1
           Z(4)=(F12*N21-KC1-KC1*TD1*N11)/W1
           Z(5)=(E12*N22+U12-KC1*TD1*N12)/W1
           Z(6)=-KC1/(TI1*W1)
           Z(7)=(F21*K11-KC2*TD2*K21+U24*K41)/W2
           Z(8)=(U24*K43-KC2*TD2*K23+GFF2)/W2
           Z(9)=(E21*K14+U24*K44)/W2
           Z(10)=(E21*N11+U21-KC2*TD2*N21)/W2
           Z(11)=(E21*N12-KC2-KC2*TD2*N22)/W2
           Z(12)=-KC2/(TI2*W2)
           W3=1.-Z(1)*Z(7)
           DO 1 K=1,4
```

```
          T1(K)=(Z(1)*Z(K+7)+Z(K+1))/W3
          T2(K)=(Z(7)*Z(K+1)+Z(K+7))/W3
        1 CONTINUE
          T1(5)=Z(6)/W3
          T1(6)=Z(12)*Z(1)/W3
          T2(5)=Z(6)*Z(7)/W3
          T2(6)=Z(12)/W3
INCON X=.24102,TE=718.
INCON X1=0.,X2=0.,DERY1=0.,DERY2=0.,INTY1=0.,INTY2=0.
INCON            Q=.5,QC=.2
INCON            IRX=1,ITX=3
INCON K1=1
INCON            XN=0.,TN=0.
PARAMETER KC1=1.E+10,KC2=1.E+10
PARAMETER TAU=.05
PARAMETER TD1=1.,TD2=4.3,...
          TI1=.579,TI2=4.13,...
          J33=.1,K22=-.538,...
          K41=.451,K42=-65.1,K43=.5,K44=-5.31
CONSTANT XTL=0.,A=489.
CONSTANT FREQ1=1.5,FREQ2=1.
CONSTANT         V=100.,E=.45E+5,R=1.98,AP=.3E+12,...
                 RC=60.,CC=1.,U=.286E-1,...
                 CP=1.,RH=60.,DH=-.2E+5,TC=520.,...
                 TS=718.,XS=0.24102,QS=.5,QCS=.2,XIS=.5,TIS=690.
DYNAMIC
PROCED OUT1=PUN1(TIME,TI,XI,Q,QC,X,TE,KEEP)
          IF(TIME-210.) 3,12,12
       12 CONTINUE
          OUT1=TIME
          IF(KEEP-1) 3,2,3
        2 CONTINUE
          WRITE(2,100) TIME,Q,QC,X,TE
        3 CONTINUE
      100 FORMAT(3F11.4,2F11.5)
ENDPRO
                 XP1 =Q*(XI-X)/V
                 XP  =FXP(-E/(R*TE))
                 XP2 =AP*XP*X
                 X=INTGRL(.24102,XP1-XP2)
                 TP1 =Q*(TI-TE)/V
                 FN  =QC*RC*CC
                 F   =2.*FN/(U*A)
                 TP2N=2.*FN*(TE-TC)
                 TP2D=V*CP*(F+1.)*RH
                 TP2 =TP2N/TP2D
                 TP3N=XP2*DH
                 TP3 =TP3N/(RH*CP)
                 TE=INTGRL(718.,TP1-TP2-TP3)
                 XI=INSW(XTL,0.5,X3P)
                 TI=INSW(XTL,690.,T3)
```

```
                T3=TN+690.
                X3P=XN+.5
*********CONTROL SEGMENT***********
          Y1=X-XS
          Y2=TE-TS
          OUTSQ=(Y1/XS)**2+(Y2/TS)**2
                OINT=OUTSQ**.5
          MOUTIN=INTGRL(0.,OINT)
                X3=TI-TIS
                X4=XI-XIS
          INTY1=INTGRL(0.,Y1)
          INTY2=INTGRL(0.,Y2)
NOSORT
                XL1=T1(1)*X3+T1(2)*X4+T1(3)*Y1+T1(4)*Y2
                XT1=XL1+T1(5)*INTY1+T1(6)*INTY2
          X1=LIMIT(-.5,1.5,XT1)
                Q=X1+QS
                XL2=T2(1)*X3+T2(2)*X4+T2(3)*Y1+T2(4)*Y2
                XT2=XL2+T2(5)*INTY1+T2(6)*INTY2
          X2=LIMIT(-.2,.8,XT2)
                QC=X2+QCS
                CINT=((X1/QS)**2+(X2/QCS)**2)**.5
          INSQ=(X1/QS)**2+(X2/QCS)**2
          MCONIN=INTGRL(0.,CINT)
          PI=INTGRL(0.,OUTSQ+INSQ)
PROCED  OUTIN,CONIN=TERM(TIME,MOUTIN,MCONIN)
          IF(TIME) 9,9,10
        9 OUTIN=0.
          CONIN=0.
          GO TO 11
       10 OUTIN=MOUTIN/TIME
          CONIN=MCONIN/TIME
       11 CONTINUE
ENDPRO
PROCED    RX,RN  = NOISE1(IRX,SIGMX,FREQ2,TAU,XN)
                RX=GAUSS(IRX,0.,SIGMX)
                RN=XN
                XN=RX+RN*EXP(-FREQ2*TAU)
ENDPRO
PROCED    TX,RTN = NOISE2(ITX,SIGMT,FREQ1,TAU,TN)
                TX=GAUSS(ITX,0.,SIGMT)
                RTN=TN
                TN=TX+RTN*EXP(-FREQ1*TAU)
ENDPRO
TIMER FINTIM=240.,PRDEL=1.,DELT=.05
RANGE TI,XI,Q,QC,X,TE
PRINT TI,XI,Q,QC,X,TE,OUTIN,CONIN,PI
METHOD RKSFX
END
STOP
```

```
FDBACK    11:09  ACC FRI.  DEC 19,1969
1000C  ØPTIMAL FEEDBACK-FEEDFØRWARD GAIN CALCULATIØN
1010 CØMMØN G(12,12),XP(12,12)
1020 DIMENSIØN XKD(6,6),S(6,6),SJ(6,6)
1030 DIMENSIØN B(6,6),C(6,6),PHI(6,6),THETA(6,6),CPH(6,6),CPC(6,6)
1040  DIMENSIØN XP11(6,6),XP12(6,6),XP21(6,6),XP22(6,6)
1050 DIMENSIØNSSK(6,6),E(6,6),SSS(6,6),ULØGIC(6,6),D(6,6)
1051 DIMENSIØN CPH1(6,6),CPH2(6,6),XKD1(6),XKD2(6),S1(6),S2(6)
1060 DATA N,T,EPSL,FREQ1,FREQ2/2,1.,.001,1.5,1./
1100 DATA ((ULØGIC(I,J),J=1,N),I=1,N)/1.,2*0.,1./
1120 EPS=0.000001
1130 CALL SYSTEM(B,C,D)
1272 807CØNTINUE
1274 READ,((THETA(I,J),J=1,N),I=1,N)
1275 READ,((PHI(I,J),J=1,N),I=1,N)
1276 808 CØNTINUE
1280 PRINT 105,N
1290 CALLMATPRT(N,THETA,6)
1300 PRINT 104,N
1310 CALLMATPRT(N,PHI,6)
1320 N2=2*N
1330 CALLMULTIP(N,C,PHI,CPH,6)
1340 DØ200I=1,N
1350 DØ200J=1,N
1360 200E(I,J)=C(J,I)
1370 CALLMULTIP(N,CPH,E,CPC,6)
1380 DØ201I=1,N
1390 IPN=I+N
1400 DØ201J=1,N
1410 JPN=J+N
1420 G(I,J)=B(I,J)
1430 G(I,JPN)=-1.0*CPC(I,J)
1440 G(IPN,J)=-1.0*THETA(I,J)
1450 G(IPN,JPN)=-1.0*B(J,I)
1460 201CØNTINUE
1470 CALLXNØRM(N,GNØRM)
1480 CALLSTEPSZ(GNØRM,T,TAU,KK)
1490 CONTINUE
1500C       ********      USE NEGATIVE TAU      ********************
1510 TAU=-TAU
1520 245CØNTINUE
1530 CALLXPEVAL(N2,TAU)
1540 DØ248I=1,N
1550 DØ248J=1,N
1552 JPN=J+N
1553 IPN=I+N
1554
1560 XP11(I,J)=XP(I,J)
1570 XP12(I,J)=XP(I,JPN)
1580 XP21(I,J)=XP(IPN,J)
1590 XP22(I,J)=XP(IPN,JPN)
1600 248CØNTINUE
1610 CALLSSKAL(XP11,XP12,XP21,XP22,N,ITER,EPSL,SSK)
1630 PRINT 117,TAU,EPSL,ITER
1640 CALLMULTIP(N,SSK,D,CPH,6)
1650 CALLMULTIP(N,CPH,ULØGIC,XKD,6)
1660 CALLMULTIP(N,SSK,CPC,CPH,6)
1670 DØ206I=1,N
1680 DØ206J=1,N
1690 206CPH(I,J)=CPH(I,J)-B(J,I)
1692 CPH1(1,2)=CPH(1,2)
1694 CPH1(2,1)=CPH(2,1)
```

```
1696 CPH2(1,2)=CPH(1,2)
1698 CPH2(2,1)=CPH(2,1)
1700 D0202I=1,N
1702 CPH1(I,I)=CPH(I,I)+FREQ1
1703 CPH2(I,I)=CPH(I,I)+FREQ2
1704  202CONTINUE
1706 CALL INVERT(CPH1,N,EPS,SINGUL)
1708 IF(SINGUL-1.) 2051,203,203
1710 2051 CONTINUE
1712 CALL INVERT(CPH2,N,EPS,SINGUL)
1714 IF(SINGUL-1.) 204,203,203
1720 203CONTINUE
1722 STOP
1724 204CONTINUE
1730 DO 5 I=1,N
1732 XKD1(I)=XKD(I,1)
1734 5 XKD2(I)=XKD(I,2)
1740 DO 301,I=1,2
1742 S1(I)=CPH1(I,1)*XKD1(1)+CPH1(I,2)*XKD1(2)
1744 S2(I)=CPH2(I,1)*XKD2(1)+CPH2(I,2)*XKD2(2)
1750 301 CONTINUE
1760 DO 6 I=1,N
1770 S(I,1)=S1(I)
1772 6 S(I,2)=S2(I)
1780 D0205I=1,N
1790 D0205J=1,N
1800 205S(I,J)=-S(I,J)
1840 CONTINUE
1845 CALLMULTIP(N,PHI,E,CPC,6)
1850 CALLMULTIP(N,CPC,S,SJ,6)
1860 PRINT 115,N
1870 CALLMATPRT(N,SJ,6)
1880 CALLMULTIP(N,CPC,SSK,CPH,6)
1890 PRINT 116,N
1900 CALLMATPRT(N,CPH,6)
1910 PRINT 118
2010 GOTO807
2020 120 FORMAT(F5.2,6E12.5)
2030 101FORMAT(6F10.4)
2040 102FORMAT(1H1,2X,"STEADY STATE RICCATI     HH WEST"//)
2050 103FORMAT(//2X,"C MATRIX FOLLOWS"I5,"DIMEN")
2060 104FORMAT(//2X,"PHI MATRIX FOLLOWS",I5,"DIMEN")
2070 105FORMAT(//2X,"THETA MATRIX FOLLOWS",I5,"DIMEN")
2080 106FORMAT(2X,"B MATRIX FOLLOWS",I5,"DIMENSION")
2090 107FORMAT (1H1,2X,"GNORM=",E15.5)
2100 108FORMAT(I5)
2110 109FORMAT(1HO,2X,"EXP TIME STEP",F10.4,"DESIRED T-",F10.4,"KK=",I5/
2115&)
2120 110FORMAT(1H1,2X,"EXP FOR DESIRED T=",F10.4,2X,"EVAL AT TAU",F10.4/
2125&)
2130 111FORMAT(6E12.4)
2140 112FORMAT(//2X,"    D        MATRIX FOLLOWS",I5,"DIMEN")
2150 113FORMAT(//2X,"LOGICAL U   MATRIX FOLLOWS",I5,"DIMEN")
2160 114FORMAT(//2X," SPARAMETER MATRIX FOLLOWS",I5,"DIMEN")
2170 115FORMAT(//2X,"OPTMAL FEEDFORWARD GAINS  ",I5,"DIMEN")
2180 116FORMAT(//2X,"OPTMAL FEEDBACK  GAINS  ",I5,"DIMEN")
2190 117FORMAT(2X,"TAU=",E12.4,2X,"ERROR=",F10.4,2X,"ITER=",I5/)
2200 118FORMAT(1HO,20X,"END OF DATA SET")
2210 119FORMAT(1H1,2X,"STEADY STATE   KALMAN METHOD"/)
2220 STOP
2230 END
```

```
2240 SUBROUTINEXPEVAL(N2,TAU)
2250 COMMONG(12,12),XP(12,12)
2260 DIMENSIONACALC(12,12),XIDNT(12,12),XACALC(12,12),GTAU(12,12)
2270C
2280C       SINCE WE HAVE SET A LIMIT ON THE TIME STEP, WE HAVE A GUIDE T
2290C       HOW MANY TERMS OF EXPONENTIAL SERIES IS TO BE USED   (37 TERM
2300C       ZERO THE WORKING MATRICES
2310 DO229I=1,12
2320 DO229J=1,12
2330 XP(I,J)=0.0
2340 ACALC(I,J)=0.0
2350 XACALC(I,J)=0.0
2360 XIDNT(I,J)=0.0
2370 229GTAU(I,J)=0.0
2380 DO230I=1,N2
2390 DO230J=1,N2
2400 GTAU(I,J)=TAU*G(I,J)
2410 IF(I-J)232,231,232
2420 231XIDNT(I,J)=1.0
2430 GOTO233
2440 232XIDNT(I,J)=0.0
2450 233ACALC(I,J)=GTAU(I,J)
2460 230XP(I,J)=ACALC(I,J)+XIDNT(I,J)
2470 235CONTINUE
2480 DO240I=2,36
2490 X=I
2500 XI=1.0/X
2510 CALLMULTIP(N2,GTAU,ACALC,XACALC,12)
2520 DO239J=1,N2
2530 DO239K=1,N2
2540 IF(ABS(XACALC(J,K))-1.E-20)210,210,211
2550 210ACALC(J,K)=0.
2560 GOTO239
2570 211CONTINUE
2580 ACALC(J,K)=XI*XACALC(J,K)
2590 239XP(J,K)=XP(J,K)+ACALC(J,K)
2600 240CONTINUE
2610 PRINT 200
2620  200 FORMAT(28X,"XPEVAL")
2630 201FORMAT(20X,I3,10X,E14.5)
2640 RETURN
2650 END
2660 SUBROUTINEMATPRT(N,A,MDIM)
2670 DIMENSIONA(MDIM,MDIM)
2680C
2690C       THIS IS A SPECIAL MATRIX PRINT SUBROUTUNE  FOR THIS PROGRAM
2700C        MDIM = 12 FOR 2N MATRIX       6 FOR TH E N MATRIX
2710 DO105I=1,N
2720 IF(MDIM-12)100,101,101
2730 100PRINT 110,(A(I,J),J=1,N)
2740 GOTO102
2750 101PRINT 111,(A(I,J),J=1,N)
2760 102CONTINUE
2770 105CONTINUE
2780 110FORMAT(1X,6E15.5)
2790 111FORMAT(1X,12E11.4)
2800 RETURN
2810 END
2820 SUBROUTINEXNORM(N,GNORM)
2830 COMMONG(12,12),XP(12,12)
2840 DIMENSIONGAB(12,12),SUMR(12),SUMC(12)
```

```
2850 N2=2*N
2860 D0201I=1,12
2870 SUMR(I)=0.0
2880 SUMC(I)=0.0
2890 201C0NTINUE
2900 D0202I=1,N2
2910 D0202J=1,N2
2920 202GAB(I,J)=ABS(G(I,J))
2930 D0203I=1,N2
2940 D0203J=1,N2
2950 SUMR(I)=SUMR(I)+GAB(I,J)
2960 SUMC(I)=SUMC(I)+GAB(J,I)
2970 203C0NTINUE
2980 RMAX=AMAX1(SUMR(1),SUMR(2),SUMR(3),SUMR(4),SUMR(5),SUMR(6),
2990&SUMR(7),SUMR(8),SUMR(9),SUMR(10),SUMR(11),SUMR(12))
3000 CMAX=AMAX1(SUMC(1),SUMC(2),SUMC(3),SUMC(4),SUMC(5),SUMC(6),
3010&SUMC(7),SUMC(8),SUMC(9),SUMC(10),SUMC(11),SUMC(12))
3020 GN0RM=AMIN1(RMAX,CMAX)
3030 PRINT 200
3040 200F0RMAT(28X,"XN0RM")
3050 RETURN
3060 END
3070 SUBR0UTINESTEPSZ(GN0RM,T,TAU,KK)
3080 KK=0
3090 TMAX=10.0/GN0RM
3100 IF(T-TMAX)210,210,211
3110 211KK=KK+1
3120 DIV=1.0
3130 D0214J=1,KK
3140 214DIV=DIV*2.0
3150 TAU=T/DIV
3160 IF(TAU-TMAX)212,212,211
3170 210TAU=T
3180 212C0NTINUE
3190 PRINT 200
3200 200F0RMAT(28X,"STEPSZ")
3210 RETURN
3220 END
3230 SUBR0UTINESSKAL(XP11,XP12,XP21,XP22,N,ITER,EPSL,SSK)
3240C
3250C       CALCULATES STEADY STATE FEEDBACK GAIN USING THE KALMAN EQUATI
3260C       WE ARE USING A STEP PR0CEDURE TO C0NVERGE T0 THE STEADY STATE
3270C       ** THE IMP0RTANT THING TO N0TICE IS THAT THE TAU ARGUEMENT 0F
3280C       THE FUNDAMENTAL MATRIX IS NEGATIVE**
3290C
3300 DIMENSIONXP11(6,6),XP12(6,6),XP21(6,6),XP22(6,6),SSK(6,6)
3310 DIMENSIONSSK1(6,6),SSK2(6,6),SSKN(6,6)
3320 D0250I=1,N
3330 D0250J=1,N
3340 250SSK(I,J)=0.0
3350 ITER=0
3360 251C0NTINUE
3370 CALLMULTIP(N,XP22,SSK,SSK1,6)
3380 C0NTINUE
3390 CALLMULTIP(N,XP12,SSK,SSK2,6)
3400 D0252I=1,N
3410 D0252J=1,N
3420 SSK1(I,J)=XP21(I,J)+SSK1(I,J)
3430 252SSK2(I,J)=XP11(I,J)+SSK2(I,J)
3440 EPS=0.0000001
3450 CALLINVERT(SSK2,N,EPS,SINGUL)
```

```
3460 IF(SINGUL-1.0)254,255,255
3470 255CONTINUE
3480 PRINT 201
3490 RETURN
3500 254CONTINUE
3510 CALLMULTIP(N,SSK1,SSK2,SSKN,6)
3520 CALLCNVTST(SSKN,SSK,N,SSKTST)
3530C       TO AVOID ROUND OFF, WE FORCE SYMMETRY
3540 D0256I=1,N
3550 D0256J=1,N
3560 256SSK(I,J)=(SSKN(I,J)+SSKN(J,I))/2.0
3570 IF(SSKTST-EPSL)258,258,259
3580 259ITER=ITER+1
3590 TAU=TAU+T
3600 GOTO251
3610 258CONTINUE
3620 PRINT 200
3630  200FORMAT(28X,"SSKALZ")
3640 201FORMAT(25X,"IT BLEW UP IN SSKAL")
3650 RETURN
3660 END
3670 SUBROUTINECNVTST(SSKN,SSK,N,SSKTST)
3680 DIMENSIONSSKN(6,6),SSK(6,6)
3690 SUMNM=0.0
3700 SUMDM=0.0
3710C       TEST THE CONVERGENCE OF THIS ITERATION
3720 D0255I=1,N
3730 SUMNM=SUMNM+ABS(SSKN(I,I)-SSK(I,I))
3740 SUMDM=SUMDM+ABS(SSKN(I,I))
3750 255CONTINUE
3760 SSKTST=SUMNM/SUMDM
3770 RETURN
3780 END
3790 SUBROUTINEINVERT(A,N,EPS,SINGUL)
3800 DIMENSION A(6,6)
3810C      SUBROUTINE INVERT INVERTS A MATRIC IN IT"S OWN SPACE USING THE
3820C      GAUSS-JORDAN METHOD WITH COMPLETE MATRIX PIVOTING. I.E. AT EAC
3830C      STAGE THE PIVOT HAS THE LARGEST ABSOLUTE VALUE OF ANY ELEMENT
3840C      THE REMAINING MATRIX. THE COORIINATES OF THE SUCCRSSIVE MATRIX
3850C      PIVOTS USED AT EACH STAGE OF THE RECUCTION ARE RECORDED IN THE
3860C      SUCCESSIVE ELEMENTS POSITIONS OF THE ROW  CIKYMN UBDEX VECTIRS
3870C      R ABD C . THESE ARE LATER CALLED UPON BY THE PROCEDURE PERMUTE
3880C      REARRANGES THE ROWS AND COLUMSS OF THE MATRIX. IF THE MATRIX I
3890C      SINGULAR THE PROCEDURE EXITS TO AN APPROPRIATE LABEL IN THE MA
3900C      PROGRAM. SINGLE = 1.
3910 INTEGERSINGUL,I,J,K,L,PIVI,PIVJ,P,R(6),C(6)
3920 SINGUL=0
3930C      SET ROW AND COLUMN VECTORS
3940 D011I=1,N
3950 R(I)=I
3960 C(I)=I
3970 1CONTINUE
3980C      FIND INITIAL PIVOT
3990 PIVI=1
4000 PIVJ=1
4010 D03I=1,N
4020 D03J=1,N
4030 IF(ABS(A(PIVI,PIVJ)).GE.ABS(A(I,J)))GOTO2
4040 PIVI=I
4050 PIVJ=J
4060 2CONTINUE
```

```
4070 3CONTINUE
4080C
4090C      START REDUCTION
4100C
4110 D08I=1,N
4120 L=R(I)
4130 R(I)=R(PIVI)
4140 R(PIVI)=L
4150 L=C(I)
4160 C(I)=C(PIVJ)
4170 C(PIVJ)=L
4180 ICNT=R(I)
4190 ICNT1=C(I)
4200 IF(ABS(A(ICNT,ICNT1)).GE.EPS)GOTO4
4210 PRINT 9,I,(R(IJ),C(IJ),IJ=1,N)
4220 SINGUL=1
4240 RETURN
4250 4CONTINUE
4260 D05J=1,N
4270 JK=N-J+1
4280 IF(JK.EQ.I)GOTO5
4290 ICNTJ=C(JK)
4300 A(ICNT,ICNTJ)=A(ICNT,ICNTJ)/A(ICNT,ICNT1)
4310 5CONTINUE
4320 A(ICNT,ICNT1)=1./A(ICNT,ICNT1)
4330 PIVOT=0
4340 D07K=1,N
4350 IF(K.EQ.I)GOTO7
4360 D06J=1,N
4370 JK=N-J+1
4380 IF(JK.EQ.I)GOTO6
4390 ICNTJ=C(JK)
4400 ICNTK=R(K)
4410 H=A(ICNT,ICNTJ)*A(ICNTK,ICNT1)
4420 A(ICNTK,ICNTJ)=A(ICNTK,ICNTJ)-H
4430 IF(I.GE.K.OR.I.GE.JK.OR.ABS(PIVOT).GE.ABS(A(ICNTK,ICNTJ)))
4440&GOTO6
4450 PIVI=K
4460 PIVJ=JK
4470 PIVOT=A(ICNTK,ICNTJ)
4480 6CONTINUE
4490 A(ICNTK,ICNT1)=-A(ICNT,ICNT1)*A(ICNTK,ICNT1)
4500 7CONTINUE
4510 8 CONTINUE
4520C
4530C      REARRANGE ROWS
4540C
4550 CALLPERMUT(A,R,C,N,0)
4560C
4570C      REARRANGE COLUMNS
4580C
4590 CALLPERMUT(A,C,R,N,1)
4600 RETURN
4610C
4620 9FORMAT (1H1,23HTHE MATRIX IS SINGULAR ,5H I = I5,(2I10))
4630 END
4640 SUBROUTINEPERMUT(A,S,D,N,JJ)
4650C      PERMUTE IS A PROCEDURE USING JENSEN"S DEVICE WHICH EXCHANGES R
4660C      OR COLUMN SOF A MATRIX TO ACHIEVE A REARRANGEMENT SPECIFIED BY
4670C      PERMUTATION VECTORS S,D. ELEMENTS OF S SPECIFY THE ORIGINAL SO
4680C      LOCATIONS WHILE ELEMENTS OF D SPECIFY THE DESIRED SESTINATION
```

```
4690C      LØCATIONS. NØRMALLY A AND B WILL BE CALLED AS SUBSCRIPTED VARI
4700C      ØF THE SAME ARRAY. THE PARAMETERS J,K NØMINATE THE SUBSCRIPTS
4710C      ØF THE DIMENSIØN AFFECTED BY THE PERMUATIØN, P IS THE 4ENSEN
4720C      PARAMETER. AS AN EXAMPLE ØF THE USE ØF THIS PRØCEDURE SUPPØSE
4730C      TØ CØNTAIN THE RØW AND CØLUMN SUBSCFIPTS  FØ THE SUCCESSIVE MA
4740C      PIVØTS USED IN A MATRIX INVERSIØN ØF AN ARRAY A. I.E. R(1) ,C(
4750C      ARE THE RRLATIVE SUBSCRIPTS ØF THE FISST PIVØT, R(2),C(2) ØF T
4760C      SECØND PIVØT AND SØ ØN. THE TWØ CALLS , CALL PERMUTE(A(J,P), A
4770C      ),J,K,R,C,N,P) AND CALL PERMUTE((A(P,J),A(P,K),J,K,C,R,N,P) WI
4780C      PERFØRM THE REQUIRED REARRANGEMENT ØF TØWS AND CØLUNNS RESPECT
4790 REALA(6,6),W
4800 INTEGERJ,K,N,P,S(6),D(6),TAG(6),LØC(6),I,T,TAGJ,TAGK
4810C      SETUP INITIAL VECTØR TAG NUMBER AND ADDRESS ARRAYS
4820 DØ1I=1,N
4830 TAG(I)=I
4840 LØC(I)=I
4850 1CØNTINUE
4860C
4870C      START PERMUTATIØN
4880C
4890 DØ4I=1,N
4900 T=S(I)
4910 J=LØC(T)
4920 K=D(I)
4930 IF(J.EQ.K)GØTØ3
4940 IF(JJ.EQ.1)GØTØ5
4950 DØ2P=1,N
4960 W=A(J,P)
4970 A(J,P)=A(K,P)
4980 A(K,P)=W
4990 2CØNTINUE
5000 GØTØ6
5010 5CØNTINUE
5020 DØ7P=1,N
5030 W=A(P,J)
5040 A(P,J)=A(P,K)
5050 A(P,K)=W
5060 7CØNTINUE
5070 6CØNTINUE
5080 TAG(J)=TAG(K)
5090 TAG(K)=T
5100 TAGJ=TAG(J)
5110 TAGK=TAG(K)
5120 LØC(T)=LOC(TAGJ)
5130 LØC(TAGJ)=J
5140 3CØNTINUE
5150 4CØNTINUE
5160 RETURN
5170 END
5180 SUBRØUTINEMULTIP(N,B,C,A,MDIM)
5190 REALA(MDIM,MDIM),B(MDIM,MDIM),C(MDIM,MDIM)
5200 INTEGERN,I,J,K
5210C
5220C      THIS PRØCEDURE MULTIPLIES TWØ MATRICES B AND C
5230C      SUCH THAT A(I,J)=B(I,K)*C(K,J) AND STØRES
5240C      THE RESULT IN A.
5250C
5260 DØ1I=1,N
5270 DØ1J=1,N
5280 A(I,J)=0
5290 DØ1K=1,N
```

```
5300 1A(I,J)=A(I,J)+B(I,K)*C(K,J)
5310 RETURN
5320 END
5330 SUBROUTINE SYSTEM(B,C,D)
5340 DIMENSION B(6,6),C(6,6),D(6,6)
5350 DATA Q,V,AP,E,R,T/.5,100.,.3E+12,.45E+5,1.98,765.32/
5360 DATA X,RH0,CP,DH,U,A/.0581,60.,1.,-.2E+5,.286E-1,486./
5370 DATA QC,RH0C,CC,XI,TI,TC/.2,60.,1.,.5,690.,520./
5380 F=2.*QC*RH0C*CC/(U*A)
5390 A1=AP*EXP(-E/(R*T))
5400 A2=Q/V
5410 B(1,1)=-A2-A1
5420 B(1,2)=-(E*X*A1/(R*T**2))
5430 B(2,1)=-(DH*A1/(RH0*CP))
5440 B(2,2)=-A2-DH*B(1,2)/(RH0*CP)
5450 B(2,2)=B(2,2)-U*A*F/(V*RH0*CP*(F+1))
5460 C(1,1)=(XI-X)/V
5470 C(1,2)=0.
5480 C(2,1)=(TI-T)/V
5490 C(2,2)=2*RH0C*CC*(TC-T)/(V*RH0*CP*(F+1)**2)
5500 D(1,1)=D(2,2)=0.
5510 D(1,2)=D(2,1)=A2
5520 RETURN
5530 END
```