INFORMATION TO USERS

This material was produced from a microfilm copy of the original document. While the most advanced technological means to photograph and reproduce this document have been used, the quality is heavily dependent upon the quality of the original submitted.

The following explanation of techniques is provided to help you understand markings or patterns which may appear on this reproduction.

1. The sign or "target" for pages apparently lacking from the document photographed is "Missing Page(s)". If it was possible to obtain the missing page(s) or section, they are spliced into the film along with adjacent pages. This may have necessitated cutting thru an image and duplicating adjacent pages to insure you complete continuity.

2. When an image on the film is obliterated with a large round black mark, it is an indication that the photographer suspected that the copy may have moved during exposure and thus cause a blurred image. You will find a good image of the page in the adjacent frame.

3. When a map, drawing or chart, etc., was part of the material being photographed the photographer followed a definite method in "sectioning" the material. It is customary to begin photoing at the upper left hand corner of a large sheet and to continue photoing from left to right in equal sections with a small overlap. If necessary, sectioning is continued again — beginning below the first row and continuing on until complete.

4. The majority of users indicate that the textual content is of greatest value, however, a somewhat higher quality reproduction could be made from "photographs" if essential to the understanding of the dissertation. Silver prints of "photographs" may be ordered at additional charge by writing the Order Department, giving the catalog number, title, author and specific pages you wish reproduced.

5. PLEASE NOTE: Some pages may have indistinct print. Filmed as received.

Xerox University Microfilms
300 North Zeeb Road
Ann Arbor, Michigan 48106

Downloaded from SHAREOK. Persistent Handle URL: https://hdl.handle.net/11244/3960

75-21,798

FLUCK, Samuel Claude, 1943-
A COMPARISON OF MALE AND FEMALE UNIVERSITY FACULTY MEMBERS' PERCEPTIONS OF DECISIONS MADE BY THEIR IMMEDIATE SUPERIORS.

The University of Oklahoma, Ph.D., 1975
Education, higher

Xerox University Microfilms, Ann Arbor, Michigan 48106

© 1975

SAMUEL CLAUDE FLUCK

ALL RIGHTS RESERVED

THE UNIVERSITY OF OKLAHOMA

GRADUATE COLLEGE

A COMPARISON OF MALE AND FEMALE UNIVERSITY FACULTY MEMBERS' PERCEPTIONS OF DECISIONS MADE BY THEIR IMMEDIATE SUPERIORS

A DISSERTATION

SUBMITTED TO THE GRADUATE FACULTY

in partial fulfillment of the requirements for the degree of

DOCTOR OF PHILOSOPHY

BY

SAMUEL CLAUDE FLUCK

Norman, Oklahoma

1975

A COMPARISON OF MALE AND FEMALE UNIVERSITY FACULTY MEMBERS' PERCEPTIONS OF DECISIONS MADE BY THEIR IMMEDIATE SUPERIORS

APPROVED BY

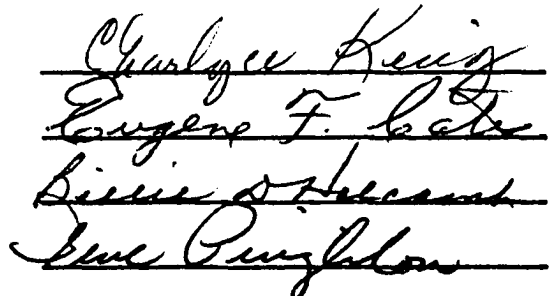

DISSERTATION COMMITTEE

ACKNOWLEDGMENTS

John Donne once said "No man is an island . . ." My doctoral program proved Donne correct. I would not have arrived where I am without the assistance and support of many people.

Charlyce King, doctoral chairperson and friend, is responsible for taking a dragging chin and making a smiling face out of it. Thank you does not say enough of what I feel, Charlyce.

Eugene Cates, a true gentleman, is responsible for my interest and knowledge in the area of adult education.

Gene Pingleton and Billie Holcomb were two excellent additions to anyone's doctoral committee. I am thankful they agreed to be on mine.

Dorothy Truex, who moved away too soon, was of great assistance in developing both my doctoral program and my dissertation topic. I owe much to you, Dr. Truex.

Dr. Ed Porter provided a most necessary sounding board in the area of research design and statistics. Thank you very much, Ed.

All of these individuals together were a most potent force in my doctoral program. And yet, there was one more potent. To my wife, Elsiann, I owe everything. She is wife, lover, confidant, and most importantly, the best friend I have. Thank you God, for Elsiann. I love you, Elsiann.

TABLE OF CONTENTS

Acknowledgments iii

LIST OF FIGURES vi

LIST OF TABLES vii

LIST OF APPENDICES viii

Chapter Page

I. INTRODUCTION AND STATEMENT OF THE PROBLEM . . 1

Statement of the Problem 2
Hypotheses Tested in the Study 3
Definition of Terms 4
Assumptions Made in the Study 6
Limitations of the Study 6

II. REVIEW OF RELATED LITERATURE 8

Person Perception 12
Attributes of the Perceiver 13
Attributes of the Stimulus Person 18
The Nature of the Interaction Situation . . 18
Summary of Related Literature 20

III. METHODS AND PROCEDURES 23

Pre-Experimental Procedures 24
Choice of Research Design 24
Selection of Participants 25
Development of a Data Collection Instrument 27

Experimental/Data Collection Procedures . . 28
Determining the Important Characteristics and Qualifications of a Decision Maker . 29

Data Analysis Procedures 30
Preliminary Coding of the Data 30
Statistical Analysis of the Data 30
Summary of Methods and Procedures 32

TABLE OF CONTENTS (Cont'd.)

Chapter		Page
IV.	RESULTS OF DATA ANALYSIS	34
	Results of the Preliminary Survey	35
	Results of the Faculty Ratings of Decision Scenarios	37
	Results of Testing Hypothesis Number One	39
	Results of Testing Hypothesis Number Two	41
	Results of Testing Hypothesis Number Three	43
	Results of Testing Hypothesis Number Four	45
	Results of Testing Hypothesis Number Five	47
	Results of Testing Hypothesis Number Six	49
	Summary of Statistical Analysis	51
V.	SUMMARY, CONCLUSIONS, AND IMPLICATIONS FOR FURTHER RESEARCH	53
	Conclusions	55
	Discussion	57
	Implications for Further Research	58
	REFERENCES	60

LIST OF FIGURES

Figure		Page
1	Sources of Variables Used in Forming an Impression of Another's Personality (Secord & Backman, 1964)	14
2	Research Design Used in Conducting the Study	26
3	Card Format Used in Coding Data From the Administrative Selection Questionnaire . . .	31
4	IBM Card Format Used in Coding Data From the Faculty Reaction Questionnaires	32
5	Professors' Response Patterns to the Faculty Reaction Questionnaire	38

LIST OF TABLES

Table		Page
1.	Male/Female Ratio of Faculty Members in Six Different Roles from Twenty-four Colleges and Universities	8
2.	Ratings of Qualifications and Characteristics from the Administrative Selection Questionnaire by Male, Female, and Total Respondents .	36
3.	A Comparison of the Female and Male Professors' Ratings of the Female Decisions . .	40
4.	A Comparison of the Female Professors' Ratings of the Female and Male Decisions . . .	42
5.	A Comparison of the Female Professors' Ratings of Female Decisions and the Male Professors' Ratings of Male Decisions	44
6.	A Comparison of the Female Professors' Ratings of Male Decisions and Male Professors' Ratings of Female Decisions	46
7.	A Comparison of the Female Professors' Ratings of Male Decisions and the Male Professors' Ratings of Male Decisions	48
8.	A Comparison of the Male Professors' Ratings of the Male and Female Decisions . . .	50

LIST OF APPENDICES

Appendix		Page
A.	Administrative Selection Questionnaire. . . .	68
B.	Faculty Reaction Questionnaire (Male Version).	70
C.	Faculty Reaction Questionnaire (Female Version).	72
D.	IBM Card Format and 80-80 Listing of Data Cards from the Administrative Selection Questionnaire	74
E.	IBM Card Format and 80-80 Listing of Data Cards from the Faculty Reaction Questionnaires	80

CHAPTER I

INTRODUCTION AND STATEMENT OF THE PROBLEM

College and university administrators have been pressured by faculty women, both individually and collectively, to equalize or establish a more suitable proportion of female faculty members. Their collective pressure has led to recently adopted federal guidelines which require colleges and universities receiving federal monies to be able to demonstrate that their employment policies afford equal opportunities to women (Logan, 1970). University women are also challenging the equity of salaries, department rank, and advancement opportunities. A recent study (Astin & Bayer, 1972) of 60,028 college and university faculty members revealed that men occupied the highest ranks (25% of the men were professors while only 9% of the women held the same rank). When other variables were controlled, sex accounted for most of the differential in rank and salary. However, Astin and Bayer mentioned nothing about women in power positions.

There is little or no mention of women in campus power positions in any of the research literature. Therefore, the focus of this study was to compare male and female faculty members in administrative positions. Specifically, this study investigated one area which may be related to the

absence of the women in university administrative positions.

Are women absent from these positions because they lack certain qualifications or characteristics desired in educational administrators, or are they denied administrative power positions simply because of their sex? What characteristics and/or qualifications are most desirable in educational administrators in power positions? Is there a difference between the characteristics and qualifications educators list as "most important" and the characteristics and qualifications actually regarded as "most important" in real life situations. What role (if any) does the administrators' sex identity play in establishing the credibility of their decisions among subordinates. Do subordinates regard male administrators' decisions as being more credible than female administrators' decisions? On the other hand, what role does the subordinates' sex identity play in establishing the credibility of their superordinates' decisions? Is there a difference in the way male and female subordinates regard administrative decisions?

Statement of the Problem

This study compared male and female faculty members' (professors') perceptions of decisions made by superordinate male and female administrators within the university power structure. Specifically, the study compared male university faculty members' agreement/disagreement ratings of administrative decisions with female university faculty members'

agreement/disagreement ratings of these same administrative decisions. The decision situations were presented to the respondents as scenarios and the sex of the superordinate decision maker was described as male or female in alternate decision story form. Therefore, the researcher was able to explore the extent to which the decision maker's own sex identity appeared to be affecting the faculty's ratings of their decisions. The effects of all other independent variables were held constant by random selection of participants and the structure of the research design.

Hypotheses Tested in the Study

In order to accomplish the stated purposes of the study, the following null hypotheses were tested for significance at the .05 level:

Ho_1 The ratings the female faculty members will make of the female decisions on the six scenarios will be significantly lower than the ratings the male faculty members will make of the female decisions on the same scenarios.

Ho_2 The ratings the female faculty members will make of the female decisions on the six scenarios will be significantly lower than the ratings the female faculty members will make of the male decisions on the same scenarios.

Ho_3 There will be no statistically significant difference between the ratings the female faculty members will make of the female decisions and the ratings the male faculty members will make of the male decisions on the same scenarios.

Ho_4 There will be no statistically significant difference between the ratings the female

faculty members will make of the male decisions and the ratings the male faculty members will make of the female decisions on the same scenarios.

Ho_5 The ratings the female faculty members will make of the male decisions on the six scenarios will be significantly higher than the ratings the male faculty members will make of the male decisions on the same scenarios.

Ho_6 The ratings the male faculty members will make of the male decisions on the six scenarios will be significantly lower than the ratings the male faculty members will make of the female decisions on the same scenarios.

Definition of Terms

In conducting the present study, it was necessary to use terms which might be interpreted differently than the researcher intended. For this reason, several definitions were offered. It should be noted, however, that terms were defined ONLY as they were used in the present study.

(1) Faculty Member/Faculty Participant: The University of Oklahoma faculty members who were randomly selected to participate in the present study.

(2) Scenario/Decision Situation: The fictitious (but realistic) situations which were developed for the data collection instrument and which were rated by the faculty participants.

(3) Decision Rating/Rating: The faculty members'

ratings made of the administrative decision made with each scenario.

(4) Administrative Decision: The administrator's decision made with each scenario which is presented as part of the data collection instrument (See Appendix B).

(5) Administrative Areas: Those areas of educational administration reflected in the scenarios (decision situations) contained on the data collection instrument.

(6) Scenarios: The six decision situations presented with the instruments shown in Appendices B and C.

(7) Female Decisions: The decisions made by the female administrators in the scenarios of Appendix C.

(8) Male Decisions: The decisions made by the male administrators in the scenarios of Appendix B.

(9) Power Position: Those administrative positions within the educational heirarchy of the University of Oklahoma which are superordinate to the rank of Professor. In particular, those administrative positions being referred to in the present study were the departmental chairman and

academic dean.

Assumptions Made in the Study

Certain assumptions were made about the faculty participants and the data collection instrument. The most important of these assumptions were as follows:

(1) It was assumed that the faculty participants constituted a true representation of the entire faculty population at the University of Oklahoma.

(2) It was assumed that the data collection instrument possessed the validity and reliability needed to illicit accurate and comprehensive responses from the faculty participants.

Limitations of the Study

It was necessary to place certain limitations on the study. Without these limitations the parameters of the data collection could not be properly established and the validity of the results would be negated. The following limitations were established for the study:

(1) The faculty population was limited to those University of Oklahoma faculty members listed in the 1974-75 Faculty Handbook and teaching at least one (1) class during the 1974-75 academic year and not assigned in an administrative

position.

(2) The areas of educational administration were limited to those areas represented by the scenarios contained on the data collection instruments shown in Appendices B and C.

CHAPTER II

REVIEW OF RELATED LITERATURE

This chapter of the dissertation contains a general review of the methods and theories commonly used to explain the absence of women in administrative power positions and a general explanation of the dynamics of person perception. The chapter is concluded with a summary of the literature.

A perusal of almost any university or college faculty handbook will reveal a paucity of female administrators in power positions. Women are found in such non-power positions as instructor, lecturer, assistant professor or associate professor, and professor, but there is a scarcity of females in such power positions as departmental chairpersons, assistant dean, dean, female vice-presidents and presidents are a rare species indeed. Percentages of males and females in various positions at 24 colleges and universities are presented in Table 1.

	% Females	% Males
Lecturers and Instructors	44%	56%
Assistant and Full Prof.	21%	79%
Chairpersons	11%	89%
Deans	4%	96%
Vice-Presidents	2%	98%
Presidents	0%	100%

The male/female ratio of the twenty-one thousand eight-hundred seventy-four faculty participants was as

follows: males; sixty-nine percent (69%) (N=15,093) and females; thirty-one percent (31%) (N=6,781).

Why are females not found in the decision-making administrative power positions on the university campus? There are several ways of approaching this question. In the broadest sense, historically speaking, the answer lies in the Holy Bible (1948) where man is told that he was not created for the woman, but she was created for him. This biblical statement has been interpreted by many to mean that women are basically inferior. Although this interpretation might seem ridiculous and inapplicable today, Ashley Montagu (1956) relates the following description of early 20th century women:

> Women, it was alleged, had smaller brains than men, and less intelligence; they were more emotional and unstable; in a crisis you could always rely on them to swoon or become otherwise helpless; they were weak and sickly creatures; they had little judgement and less sense; they could not be entrusted with the handling of money; and as for the world outside, there they could be employed only at the most menial and routine of tasks. (p. 21)

Another approach to answering the question of women in power positions is biological. An early 20th century encyclopedist, P. Moebius (1907), gave the following description of the presumed inferiority of women:

> The extraordinarily important parts of the brain necessary for spiritual life, the frontal convolutions and the temporal lobes, are less well developed in women, and this difference is inborn. . . That in the sciences, in the strictest sense, have received no enrichment from women and never shall is therefore understandable. (p. 134)

Another approach to the question concerning the absence of females in administrative power positions was taken by Broverman (1972) who studied the sex-role stereotypes of both males and females. The results indicated that masculine characteristics are more positively valued than feminine characteristics. Also, positively-valued masculine traits form a cluster entailing competence while positively-valued feminine traits reflect warmth. Consequently, Broverman concluded that males are seen as more competent than females.

Hall (1973) took a different approach to answering the question when he studied the sex differences in the initiation and influence of decisions in four-person teacher groups. The results supported the hypotheses that men are more influential group members and, in a decision-making situation, men direct their efforts more to "performance tasks" while women direct their energies more toward "positive reactions." In other words, men are perceived as initiators or actors and women are perceived as reactors.

The idea that women are inferior physically, spiritually, mentally, psychologically, and vocational is still being propounded and accepted today. Harris (1972) surveyed a number of college presidents and male faculty members. He asked them to comment about the women on their college campuses. The statements made by the respondents are typified by the following passage:

> Any woman who got this far has got to be a

> kook. . . . The girls here get good grades because they study hard, not because they are more intelligent than men. . . . We expect women who come here to be competent, good students, but we don't expect them to be brilliant or original. . . . Women are intrinsically inferior. . . . Our general admissions policy has been, if the body is warm and male, take it; if it is female, make sure it is at least an A minus from Bryn Mawr. (p. 587)

Continuing in the same vein, Norton (1972) reported that employers were "naturally" reluctant to hire and promote women who "naturally" take time out or resign because of family obligations. However, Norton concluded that women resign or are absent less often (including time off for child care and pregnancy) than men.

All the proposed reasons why females are conspicuous by their absence in decision-making or administrative positions relate, either directly or indirectly, to the hypothetical construct of person perception. People tend to make judgments and form opinions about others by using social, psychological, physical, economic, aesthetic, etc. cues (Secord and Backman, 1964). In some situations the opinion formed and the judgment rendered are based on a minimum amount of "objective" information. In the present study, the sex of the decision maker was considered as one of the independent variables. The study investigated the degree to which the sex of the decision maker influenced the perception of the faculty rater as to the quality of the decision made.

Person Perception

The specific thrust of this study was to investigate "person perception" or "social perception" as it influences the placement or lack of placement of females in administrative power positions within educational institutions. Tagiuri and Petrullo (1958) have defined "person perception" in behavioral science as follows:

> We propose using the term person perception whenever the perceiver regards the object as having the potential of representation and intentionality. What do we mean by this? As a physical stimulus a person is, of course, not different from other stimuli. In the sense that, through information gained via perception, we infer properties and potentialities of the object that are not immediately given, persons are doubtless special objects, for persons have psychological properties. Indeed, when we speak of person perception or knowledge of persons, we refer mostly to the observations we make about intentions, attitudes, emotions, ideas, abilities, purposes, traits---events that are, so to speak, inside the person . . . Underlying this mode of comprehending human action is the capacity we have to note that the person whose actions we are following has within him a representation of his environment, that his actions are mediated by the representations he forms . . . There is one more point we wish to make about persons as objects of knowledge. Person perception is special also in that the similarity between the perceiver and the perceived is greater than in any other instance. (pp.x-xi)

Closely allied to person perception, and certainly a part of it, are the impressions formed in human interaction. Secord and Backman (1964) cite the logic behind the study of person perception in the following excerpt:

> Social psychologists are interested in person perception mainly because of its relevance

> for understanding human interaction. Since interaction is mediated by the feelings, thoughts, and perceptions that individuals have about each other, these subjective processes must be taken into account. In particular, person perception is important to understanding the interaction processes of communication, influence, and change. (pp. 49-50)

It is generally agreed (Tagiuri & Petrullo, 1958; Secord & Backman, 1964) that three sets of factors interact to produce person perception: (1) the attributes of the perceiver, (2) the attributes of the stimulus person, and (3) the nature of the interaction situation which provides the context or background in which the stimulus person is perceived. Figure 1 is a simplified design of the factors involved in forming impressions of another's personality.

The present study was concerned with the interaction, relationship, and influence of these three sets of factors. Therefore, it was useful to present a brief description of the literature pertaining to each of these factors. Following these brief descriptions, the researcher examined those studies which were more closely related to the hypotheses investigated in the present study.

Attributes of the Perceiver

Studies concerning the influence of perceiver attributes on person perception have been summarized by Bruner and Tagiuri (1954), Taft(1955), Shrauger & Altrocchi (1964), and Secord & Backman (1964). Emphases in earlier studies was towards determining the accuracy of perception of another's

Figure 1

SOURCES OF VARIABLES USED IN FORMING AN IMPRESSION OF ANOTHER'S PERSONALITY (Secord & Backman, 1964)

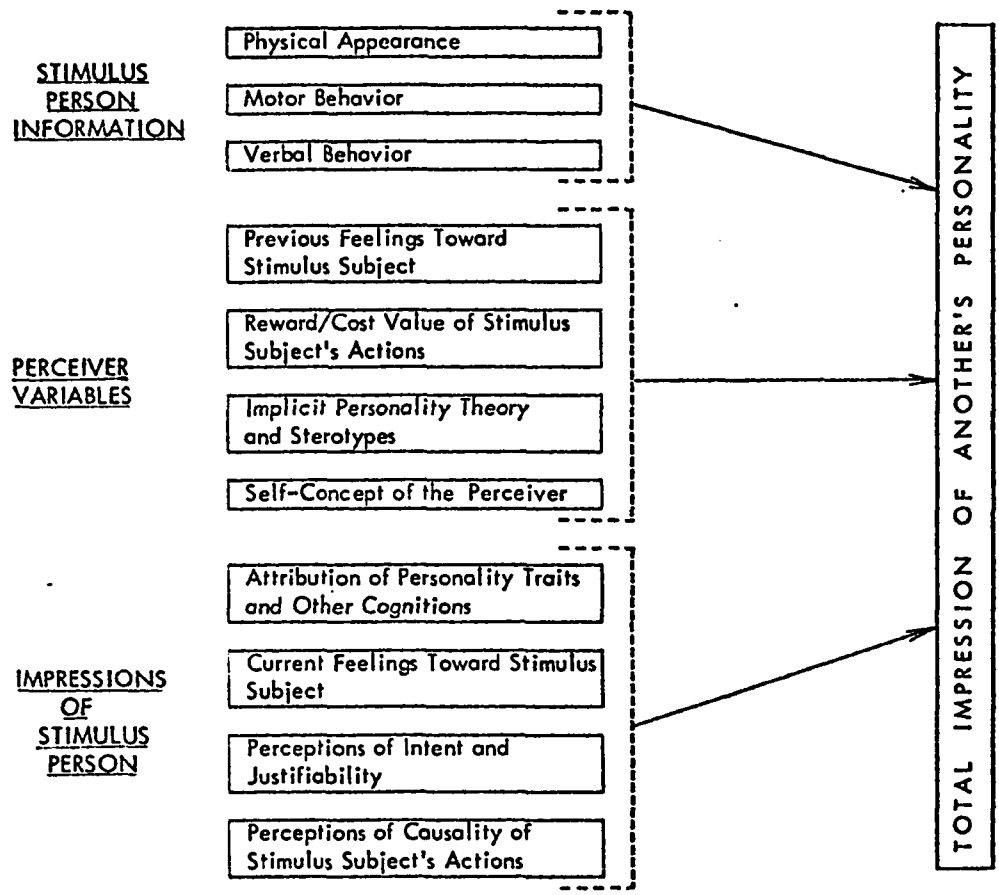

personality, on the one hand, and towards investigation of the hypothetical concept of assumed similarity between the judge and the stimulus person, on the other. The methodological problems inherent in both approaches are enormous.

When trying to determine the accuracy of a certain perception of another's personality, the major problem is one of establishing a satisfactory criterion.

On the other hand, trying to establish the similarity between the judge (perceiver) and the stimulus person results in the assumption that such a similarity can be established. The methodological problems in both approaches have been described by Cronbach (1955, 1958) and Gage (1955).

Numerous studies have related person perception to specific traits residing in the perceiver. Among these are studies showing the influence of: age (Chowdry & Newcomb, 1952; Dymond et al., 1952; Gates, 1923; Kohn & Fiedler, 1961; Taft, 1950; Kimmel & Stein, 1973); family background and sibling rank, intelligence, training in psychology, aesthetic ability and sensitivity, emotional stability and character integration, self-insight, social class, social skill and popularity, attitude toward social relations (review by Campbell and Yarrow, 1961; Gollin, 1958; Taft, 1955); sex (Dymond, 1949; Kohn & Fiedler, 1961; Taft, 1950; Gitter et al., 1972; Olesker & Balter, 1972; Miller & Pyke, 1973; Bennett et al., 1973; Kimmel & Stein, 1973; Cvetkovich, 1972).

A recent trend in the study of person perception is to analyze the processes involved in knowing others, in comparison to the earlier trend and emphasis on veridicality or accuracy of the individual in judging personality. In the current analyses of this process of impression formation, there are various findings and conceptual formulations regarding the perceiver's modes of perception. One group of

studies deals with cognitive structures and processes, stressing the manner in which individuals vary in the extent to which they have differentiated their conceptualizations of their social environment. Differentiation is defined as the tendency to make fine distinctions among people and to perceive them as different from one another. "Concreteness-abstractness" of thought processes and "cognitive complexity" have been proposed as factors which underlie differences in ability to attribute contradictory or incongruous traits to another person, and to make use of a large number of trait dimensions or concepts in describing others (Altrocchi, 1961; Bieri, 1961; Gardner & Schoen, 1962; Gollin & Rosenberg, 1956; Harvey et al., 1961; Holzman & Gardner, 1959; Mayo & Crockett, 1964; Rabin, 1962; Sarbin, 1954; Tripodi & Bieri, 1963; Wolin, 1956).

Another group of studies has investigated the idea of "implicit personality theory." This is a concept introduced by Bruner and Tagiuri (1954), named and expanded by Cronbach (1955), and organized by Kelly (1955) into a theory of personality. It refers to a postulated tendency or bias in a perceiver to have, without realizing it, a "theory" about what other people are like. Cronbach (1955) detailed the differences among perceivers in their inclinations to rate others constantly higher (or lower) on particular traits, to make more extreme (or more central) ratings on certain traits, and to associate particular traits with each other.

Gross (1961) has directly tested this notion. She concluded that the concept of a unitary attitude toward the generalized other is too nonspecific to be useful. Gross based this conclusion on the results of a study which showed that variations in stimulus materials have a greater influence on the judges' ratings than do response biases of the perceivers. She recommended that we examine the influence of factors residing in the perceiver together with influence of specific situations and stimulus persons. Koltuv's (1962) study dealt, similarly, with patterns of consistency revealed by trait intercorrelations among judges' personality ratings of other people. She concluded that perceiver predispositions influenced perception, when traits relevant to each judge were analyzed, and when stimulus persons were unfamiliar to the perceiver.

A study conducted by Secord and Berscheid (1963) also showed that relations among traits are a significant element in the perception of others, and that these relations are relatively fixed and general for different stimulus persons.

Another important element in evaluating differences in the way people judge others is permitting the judge to use his own voluntarily chosen categories vs. providing him with preselected traits on which he is to evaluate others. There are extensive demands for research to determine the salient dimensions used typically and in everyday life by perceivers in judging other people (Bruner & Tagiuri, 1954); Cronbach,

1958; Hastorf, Richardson, & Dornbusch, 1958; Jackson & Messick, 1963; Rommetveit, 1960; Tagiuri, 1958; Tahfel & Wilkes, 1964).

Attributes of the Stimulus Person

Literature focusing on the stimulus person has included studies dealing with the role of the following factors: physical appearance and body build (Kretchmer, 1925; Sheldon, Stevens, & Tucker, 1940); verbal cue traits presented as stimuli (Asch, 1946, 1952; Haire & Grunes, 1950; Kastenbaum, 1951; Luchins, 1948; Wishner, 1960); stereotyping through racial, role, or group membership information (Beilin, 1963; Pepitone & Hayden, 1955; Secord, 1959; Secord, Bevan, & Katz, 1956; Veness & Brierly, 1963); sex (Cvetkovich, 1972; Bennett et al., 1973; Olesker & Balter, 1972; Gitter et al., 1972). The present study was concerned particularly with the influence of the sex of the stimulus person.

The Nature of the Interaction Situation

The interaction situation is defined as the context or background in which the stimulus person is being judged. This context varies from situations where the perceiver has minimal information about the familiarity with the stimulus person to on-going interactions with highly structured and well-defined role relationships between the perceiver and the perceived.

There is a number of theoretical constructs considered as cognitive-perceptual processes which underlie person

perception in situations where the information about the stimulus person is limited. Among these constructs is "temporal extension," a process in which a momentary characteristic of the stimulus person is regarded as a lasting attribute (Heider, 1958a; Secord, 1958, 1964). "Resemblances to familiar persons" in the life of the perceiver has been identified by others (Secord and Backman, 1964) to account for person perception when the stimulus person is unknown "metaphorical generalization," a process of reasoning by making analogies, has been proposed by Secord, Stritch, and Johnson (1960) and Secord and Muthard (1955). Other constructs proposed to explain the inference process are "categorization" of people in certain classes associated with certain personality characteristics (Kogan & Shelton, 1960) and "stereotyping" of persons because of their membership in a certain social stratum (Secord, 1959; Secord, Bevan, & Katz, 1956).

In situations where the interactional context between the perceiver and the stimulus person is well established, research has shown that it is an oversimplification to assume a simple one-to-one relation between the traits of the perceiver and those of the stimulus person. It is important to take into consideration the effects of such factors as <u>role-relationships</u> between the perceiver and the perceived (Jones & deCharms, 1957; Sarbin, 1954); <u>affect</u> or <u>liking</u> relationships between the perceiver and the perceived

(Backman & Secord, 1959; Heider, 1958b; Newcomb, 1961; Pastore, 1960a, 1960b; Tagiuri, 1958); status and power relationships between the two (Horwitz, 1958; Pepitone, 1958).

Summary of Related Literature

Person perception has application in many areas of life. One of the important areas is in the field of education. A general education is mandatory for most American children. Therefore, it is necessary to view how person perception works at all levels of education. Rosenthal (1968) was one of the first researchers to study the effects of perception as it influenced the quality and product of education. In developing his "self-fulfilling prophecy" theory, he demonstrated how the perceptions teachers had of their students influenced the academic achievement the students made in those classes.

Most of the educational research done concerning person perception has been related to the teacher's perceptions of his/her students, himself, his supervisor, or his colleagues, and was conducted in the public schools (Finn, 1972; Freese & West, 1972; Johnson, 1971; Balmer, 1972; Griffin, 1972; Hansen, Borgatta, & Lambert, 1971).

Some research has also been conducted at the college and university level. Lohman (1972) tried to determine who the "ideal colleague" was for a sample of university faculty. Using the Adjective Check List (ACL), he found that male

faculty were not perceived as more dominant, achievement oriented, orderly, and change oriented than female faculty. Female faculty were not perceived in a significantly different way than males in any category, but equalled males in self-control, personal adjustment, autonomy, and deference.

Siever, Loomis, and Neidt (1972) studied the role perceptions of departmental chairmen in two land grant Universities. They found that effective departmental chairmen had the following characteristics: supported good teaching, reputation for achieving goals, ability to recruit promising faculty, good organization of faculty duties, a personal reputation for scholarship, and a capacity for decisive thinking and action.

Gubasta (1972) attempted to identify perceptions of leader behavior and planning behavior held by college and university chief executives and selected subordinates. Using the Leader Behavior Description Questionnaire (Form XII), he found significant relationships between the two referent groups on both planning and leadership behavior variables. Chief executives who were seen as good leaders also scored high as good planners.

The last three studies are presented as most germane to the present study. The characteristics of university decision makers and the perceptions of university faculty toward male and female colleagues was the basis for the

present study. Does the sex of the decision maker make a difference in the perceptions of subordinates in a university power structure?

CHAPTER III

METHODS AND PROCEDURES

Two-hundred (N=200) full time faculty members from the University of Oklahoma acted as subjects in the present study. These participants were asked to determine the differences between male and female faculty members' ratings of decisions made by their immediate superiors. A significant focal point of the study was to explore the extent to which the sex identity of the immdiate superior appeared to be a significant factor in the professors' agreement/disagreement ratings of decisions made from selected scenarios.

The study was conducted in two phases. In the first phase, faculty members were asked to list and rate the importance of characteristics most germane to making administrative decisions.

In the second phase of the study, the researcher presented scenarios of decision-making situations and the decision was made by the dean in each case. The selected professors indicated their agreement or disagreement with each decision. Further analysis of the data explored the effect of the decision-maker's (dean's) sex identity on the participants' agreement/disagreement ratings.

The methods used in the study were divided into the three areas: (1) Pre-Experimental Procedures, (2) the

Experimental or Data Collection Procedures, and (3) Data Analysis Procedures.

PRE-EXPERIMENTAL PROCEDURES

The pre-experimental procedures consisted of all those tasks which had to be performed prior to the data collection procedures. The more important of these procedures are discussed in the following sections.

Choice of Research Design

The first pre-experimental procedure was to choose the proper research design for the conduct of the study. The words "research design" are intended to mean the plan, structure, and strategy of investigation conceived to obtain answers to research questions and to control external sources of variation. The Plan was the overall scheme or program of the evaluation problem; the Structure was the more specific structure or paradigm of the actual manipulation of the independent variables being controlled; and the Strategy as used here was even more specific than the structure--it was the actual methods used in the gathering and analysis of the data.

A research design serves two basic purposes: (1) it provides answers to research questions posed by the investigator; and (2) it controls external sources (independent variables) of variation. In other words, it is through the design of a study that research is made effective and interpretable. Kerlinger (1973) makes the following statement in

regard to research and evaluation designs:

> . . . How does design accomplish this? Research designs set up the framework for 'adequate' tests of the relations among variables. The design tells us, in a sense, what observations (measurements) to make, how to make them, and how to analyze the quantitative representations (data) of the observations. Strictly speaking, design does not 'tell' us precisely what to do, but rather suggests the directions of observations-making and analysis, how many observations should be made, and which variables (independent variables) are active variables and which are assigned. We can then act to manipulate (control) the active variables and to dichotomize or trichotomize or otherwise categorize the assigned variables. A design tells us what type of statistical analysis to use. Finally, an adequate (proper for the particular situation) design outlines possible analysis (Parentheses material added).

The research design chosen for the present experiment was a multiple-sample true experimental design proceeded by the random sampling of participants from four (4) finite populations. A paradigm of this research design is presented in Figure 2.

Selection of Participants

The final step of the pre-experimental procedure was the selection of professors. The population of possible participants included all full time faculty members who were listed in the University of Oklahoma Faculty Handbook (1974-75 academic year). Two samples of one-hundred each (Males N=100; Females N=100) were drawn from the total population of approximately one-thousand three-hundred (N=1300) faculty members.

These groups were used to determine the characteristics

Figure 2

RESEARCH DESIGN USED IN CONDUCTING THE STUDY

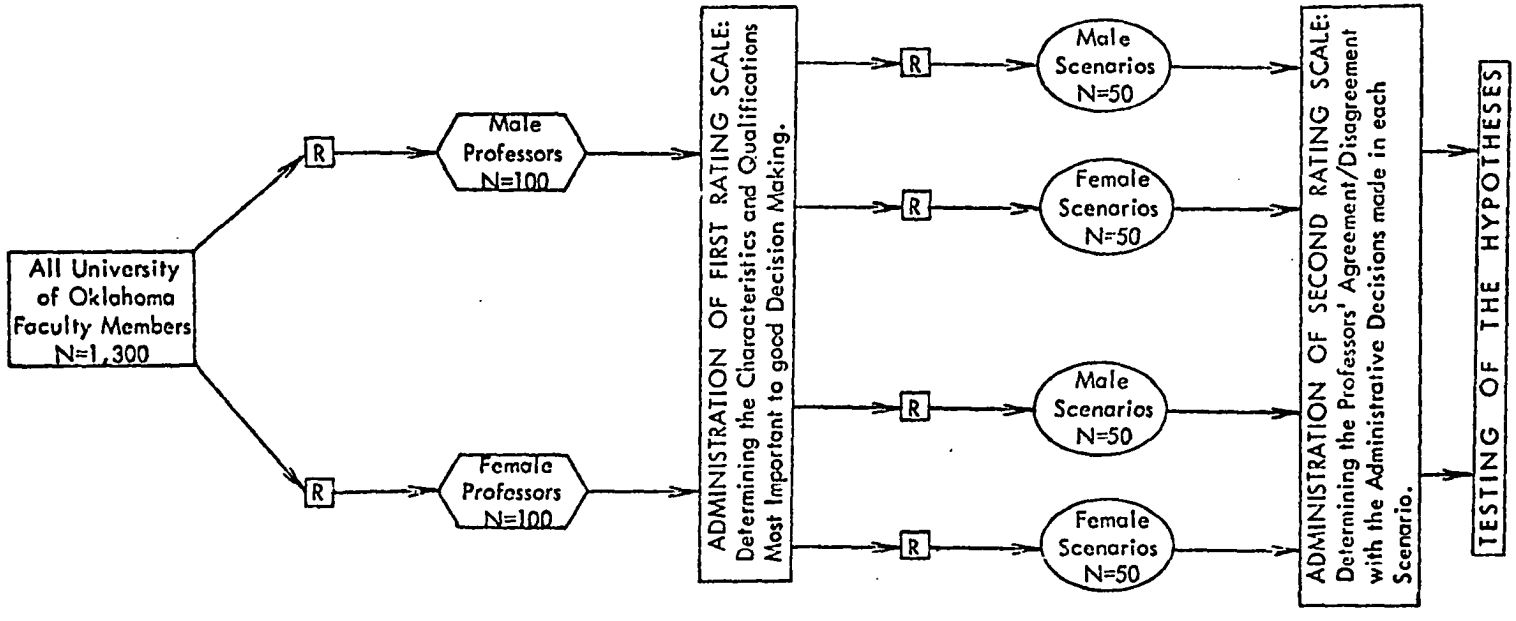

R = Random selection procedures used

and qualifications most important to decision making (see Appendix A) and to determine the amount of agreement/disagreement ratings of each scenario (see Appendices B and C).

Development of a Data Collection Instrument

The next step in the pre-experimental procedures was the development of a data collection instrument. This required the development and statement of several scenarios which were relevant to administrative decisions made by educators in power positions. In developing these scenarios, two criteria were considered; (1) all general areas of administrative responsibility were considered and (2) the stated scenarios were valid and reliable indicators of the administrative areas considered.

A randomly-selected panel (N=5) of educational administrators assisted the researcher in determining the general areas of responsibility under the purview of educational administrators. This panel of administrators, the Doctoral Committee, and the researcher arrived at the following taxonomy (classification scheme) for administrators:

1. General Duties
2. Budgeting
3. Staffing
4. Planning
5. Reporting
6. Directing Research

A scenario was written for each of the areas listed. In each hypothetical situation, the reader was informed of the decision made by the Dean. Professors chosen to participate

in the proposed study were asked to indicate their agreement/disagreement with the decision made in each situation (scenario). Participants were then asked to mark one of the choice-points on the continuum following each scenario. The format of the final data collection instruments is shown in Appendices B and C.

EXPERIMENTAL/DATA COLLECTION PROCEDURES

The second phase of the methods and procedures was the collection of the data from the participants.

Data were collected from the male (N=100) and female (N=100) faculty to determine the characteristics and qualifications which they felt were most important to the decision maker. Each participant was asked to complete one of the questionnaires shown in Appendix A.

The second part of the data collection procedures was to determine the professors' agreement/disagreement with the decisions made in the scenarios of Appendix B and C. Again, the randomly chosen professors served as the data collection group. The groups of male and female faculty members were further divided into the following groups: (1) female faculty members who rated female decisions, (2) female faculty members who rated the male decisions, (3) male faculty members who rated female decisions, and (4) male faculty members who rated male decisions. Each professor in these four groups was asked to complete one of the Faculty Reaction Questionnaires shown in Appendix B (male scenarios)

Appendix C (female scenarios). The altering of the decision maker's sex on half of the scenarios formed four different combinations of sex between the professors and the decision makers in the scenarios. These group combinations were as follows:

(1) Male professors who rated females' decisions

(2) Male professors who rated males' decisions

(3) Female professors who rated females' decisions

(4) Female professors who rated males' decisions

The data collected from these four groups were used to test the hypotheses stated in Chapter I.

Determining the Important Characteristics and Qualifications of a Decision Maker

The next step in the pre-experimental procedures was to determine the characteristics and/or qualifications the participating professors believed were most germane to the decision making process in education and the importance of the characteristics and/or qualifications listed. A questionnaire such as that shown in Appendix A was distributed to the professors selected for participation in the study. Each professor was asked to select the most important characteristics or qualifications from the list provided, or list the characteristics and qualifications they believed were most important in the spaces provided. Participants were than asked to rate the importance of several characteristics and qualifications of a decision maker on a continuum

rating scale. Data taken from these ratings were used to determine those qualifications and characteristics which the participants felt were most important in educational decision makers.

The ratings from the preliminary questionnaires were coded according to the format shown in Figure 3. The coded values assigned to participants' ratings of characteristics and qualifications were averaged as a method of deriving a single numerical index. These indexes were used in explaining some of the results derived from testing the hypotheses.

DATA ANALYSIS PROCEDURES

The final phase of the methods and procedures was the data analysis procedures. These procedures were conducted after the data had been collected. The data analysis procedures consisted of the preliminary coding of the data and the statistical analysis of the data.

Preliminary Coding of the Data

It was necessary to code the data taken from Faculty Reaction Questionnaires to facilitate its analysis. The data were entered on IBM cards according to the format shown in Figure 4. These IBM cards were used to further analyze the results of the study.

Statistical Analysis of the Data

The final part of the data analysis procedures was the actual statistical analysis of the data and the testing of the hypotheses. A Student's *t* test was used to compare the

Figure 3

CARD FORMAT USED IN CODING DATA FROM THE ADMINISTRATIVE SELECTION QUESTIONNAIRE

QUESTIONNAIRE INFORMATION	CARD COLUMNS	RANGE OF VALUES
1. Respondent's Sex	1	1-2
2. Questionnaire Number	2-3	01-99
3. Rating of "Age"	4	1-7
4. Rating of "Race or Ethnic Origin"	5	1-7
5. Rating of "Sex"	6	1-7
6. Rating of "Marital Status"	7	1-7
7. Rating of "Religion"	8	1-7
8. Rating of "Type of Previous Administrative Experiences"	9	1-7
9. Rating of "Number of Years of Administrative Experience"	10	1-7
10. Rating of "Previous Work Experience"	11	1-7
11. Rating of "Past Record as a Decision Maker"	12	1-7
12. Rating of "Number of Years in Major Field of Interest"	13	1-7
13. Rating of "Number of Memberships in Professional Organizations"	14	1-7
14. Rating of "Number of Service Clubs Affiliated With"	15	1-7
15. Rating of "College or University where Individual Received Doctorate"	16	1-7
16. Rating of "Overall GPA in Graduate School"	17	1-7
17. Rating of "Academic Area of Doctoral Study"	18	1-7
18. Rating of "Graduate Courses Included in Doctoral Program"	19	1-7
19. Rating of "Number of Publications"	20	1-7
20. Rating of "Recency and Type of Publications"	21	1-7
21. Category and Rating of First Option	22-23	1-7
22. Category and Rating of Second Option	24-25	1-7
23. Category and Rating of Third Option	26-27	1-7
24. Category and Rating of Fourth Option	28-29	1-7
25. Category and Rating of Fifth Option	30-31	1-7
26. Category and Rating of Sixth Option	32-33	1-7
27. Category and Rating of Seventh Option	34-35	1-7
28. Category and Rating of Eighth Option	36-37	1-7

Figure 4

IBM CARD FORMAT USED IN CODING DATA FROM THE FACULTY REACTION QUESTIONNAIRE

Questionnaire Information	Card Columns	Range of Values
1. Data Group	1	1-4
2. Questionnaire Number	2-3	01-50
3. Rating of First Scenario	4	1-5
4. Rating of Second Scenario	5	1-5
5. Rating of Third Scenario	6	1-5
6. Rating of Fourth Scenario	7	1-5
7. Rating of Fifth Scenario	8	1-5
8. Rating of Sixth Scenario	9	1-5

mean ratings made by the four different groups of male and female professors. The *t* test for two independent group means was the testing statistic which the researcher found to be most appropriate for making the comparisons in each hypothesis (Downie & Heath, 1970).

Summary of Methods and Procedures

The study was conducted in two stages. During the first stage of the study the 100 faculty members were asked to rate the importance of the characteristics/qualifications which they believed to be most important in making administrative

decisions. These data were used to determine the importance given to sex in the decision process.

In the second part of the study the researcher presented six (N=6) scenarios related to different areas of decision making in administration such as faculty hiring policies, tenure, budget, faculty dismissal, promotions and salaries to each male and female faculty member who had been randomly chosen from the University of Oklahoma faculty to participate in the study. The faculty participants were aware of the problem faced by the administrator and the decision made in each case. The only other information the faculty members had concerning the administrator's decision on the seven-point continuum was the sex of the decision maker. Through the random selection of professors and alternating the sex of the scenario decision makers, the researcher was able to explore the effects of the decision maker's sex on the faculty participants' agreement/disagreement ratings. The amount of importance placed on the decision maker's sex by the faculty respondents was then compared to the amount of importance these same faculty members placed on the decision maker's sex identity in the first stage of the study.

A Student's t test was used to compare the mean ratings made by the various faculty groups. Six hypotheses were tested for significance at the .05 level.

CHAPTER IV

RESULTS OF DATA ANALYSIS

Agreement/Disagreement ratings made by one-hundred fifty-three female (N=77) and male (N=76) professors from the University of Oklahoma were used to determine whether the sex of an immediate superior was a significant factor in the participants' agreement/disagreement with decisions made from six selected decision scenarios. Their ratings were made on the Faculty Reaction Questionnaires (Appendices B and C), and were used to test six null hypotheses comparing the male and female faculty members' ratings of male and female decisions. These same professors had earlier completed an Administrative Selection Questionnaire (Appendix A). In completing this questionnaire, they had indicated the amount of importance they would place on sex identity when selecting an educational administrator. Finally, a comparison was made between the amount of importance which should be placed on sex (as determined by the preliminary survey) and the amount of importance actually given to sex (as determined by testing the six hypotheses).

This Chapter of the dissertation contains a summary of the information reported on the Administrative Selection Questionnaire, the results of testing the six null hypotheses

stated in Chapter I, several ancillary findings, and a summary of all statistical analysis.

Results of the Preliminary Survey

The Administrative Selection Questionnaire was sent to two-hundred (N=200) randomly selected professors at the University of Oklahoma during the Fall term of the 1974-75 academic year. One-hundred (N=100) were sent to female professors and one-hundred (N=100) were sent to male professors. A final count of the returns showed that eighty three percent (83%) of the male professors returned the instruments and eighty-one percent (81%) were usable responses. Ninety-one percent (91%) of the female professors returned the questionnaires, and eighty-eight percent (88%) of the responses were usable.

The results of the faculty members' responses to the Administrative Selection Questionnaire are presented in Table 2. The data presented in this Table show the rank order of the questionnaire items as determined by the male and female professors and the rank order of the two groups' ratings combined. The "write-in" qualifications and characteristics are denoted by an asterisk (*) with the number of times each was written in by the respondents.

The data presented in Table 2 show that the qualifications and characteristics which were written in by the professors received much higher ratings than those already listed on the questionnaire. Part of this was due to the

TABLE 2

RATINGS OF QUALIFICATIONS AND CHARACTERISTICS FROM THE ADMINISTRATIVE SELECTION QUESTIONNAIRE BY MALES, FEMALES, AND TOTAL RESPONDENTS

Questionnaire Items	Average Male Rating	Average Female Rating	Average Total Rating
1. Leadership Ability*	7.000 (N=3)	7.000 (N=2)	7.000 (N=5)**
2. Intelligence*	7.000 (N=3)	7.000 (N=1)	7.000 (N=4)**
3. Leadership/Managerial Style*	7.000 (N=3)	6.800 (N=5)	6.875 (N=8)**
4. Desirable Personality Traits*	6.786 (N=14)	6.765 (N=17)	6.774 (N=31)**
5. Personal Integrity*	6.571 (N=7)	7.000 (N=4)	6.727 (N=11)**
6. Ability to Communicate with and work with Others*	6.818 (N=11)	6.500 (N=14)	6.640 (N=25)**
7. Administrative Skills (Specific)*	6.375 (N=8)	6.667 (N=15)	6.565 (N=23)**
8. Past Record as a Decision Maker	6.444	6.375	6.408
9. Physical Health*	0.000 (N=0)	6.000 (N=3)	6.000 (N=3)**
10. Previous Work Experience	5.617	5.852	5.739
11. Type of Previous Administrative Experience	5.457	5.818	5.645
12. Personal Appearance*	4.500 (N=2)	5.000 (N=3)	4.800 (N=5)**
13. Number of Years of Administrative Experience	4.593	4.920	4.763
14. Number of Years of Experience in Major Field of Interest	4.222	4.841	4.544
15. Recency and Type of Publications	4.222	3.989	4.101
16. Academic Areas of Doctoral Study	3.741	4.352	4.059
17. College or University where Individual Recieved Doctorate	3.741	3.852	3.799
18. Graduate Courses Included in the Doctoral Program	3.296	4.068	3.698
19. Overall Grade-Point Average in Graduate School	3.148	4.045	3.615
20. Number of Publications	3.630	3.386	3.503
21. Participant's Age	3.321	3.261	3.290
22. Number of Memberships in Professional Organizations	2.926	3.466	3.207
23. Number of Service Clubs Affiliated With	1.827	2.386	2.118
24. The Applicant's SEX	1.778	1.886	1.834
25. The Applicant's RACE	1.691	1.795	1.745
26. Marital Status	1.840	1.364	1.592
27. Religious Beliefs	1.420	1.455	1.438

*Written in by the responding professors
**Total number of professors listing the characteristic

small number of professors who listed the characteristics and made the ratings of each. A complete listing of the write-in responses is presented in the appendices. However, most of the suggestions which were written in were very meaningful and will be used in developing a revised form of the Administrative Selection Questionnaire. The most important rating for the purpose of the present study was on the variable of sex. The professors rated this variable 24th among a total of 27 qualifications and characteristics. These results indicate that the variable of sex was regarded as a very unimportant consideration when selecting an educational administrator.

Results of the Faculty Ratings of Decision Scenarios.

Faculty Reaction Questionnaires were mailed to two-hundred randomly-selected male (N=100) and female (N=100) professors. Half of each sex received the Male Version (Appendix B) while the other half of each sex group received the Female Version (Appendix C) of the scenarios. The numbers of Faculty Reaction Questionnaires sent to each group of professors and the number of instruments returned are presented in Figure 5.

The data presented in Figure 5 show that seventy-nine percent (79%) of all questionnaires were returned with a total of over seventy-six percent (76.5%) usable responses. Responses from the Faculty Reaction Questionnaires were used to test the hypotheses stated in Chapter I.

Figure 5

PROFESSORS' RESPONSE PATTERNS TO THE FACULTY REACTION QUESTIONNAIRE

Faculty Group	Number of Questionnaires Sent	Number of Responses Received	Percent of Return	Number of Usable Responses	Percent of Usable Responses
Female Professors Rating Female Decisions	50	39	78	38	76
Female Professors Rating Male Decisions	50	39	78	39	78
Male Professors Rating Female Decisions	50	41	82	38	76
Male Professors Rating Male Decisions	50	39	78	38	76
TOTALS . . .	200	158	79	153	76.5

Results of Testing Hypothesis Number One

The exact form of the null proposition tested in hypothesis number one was as follows:

> Ho_1 The ratings the female faculty members will make of the female decisions on the six scenarios will be significantly lower than the ratings the male faculty members will make of the female decisions on the same scenarios.

The first null hypothesis was tested by comparing the male and female professors' ratings of the female scenario decisions. A preliminary comparison of the two groups' variances was made with an F-Maximum Test for Homogeneity of Sample Variances (Bruning & Kintz, 1970). Results of this test showed the two variances to be homogeneous ($F = 1.074$, $df=37/37$; $p > .05$). Since the variances were statistically equal, the two group means were compared with a Student's t test for two independent sample means. Results of these calculations are presented in Table 3 along with the means and standard deviations of the two groups' ratings.

The results presented in Table 3 indicate that there was a significant difference between the male and female faculty members' ratings of the female scenario decisions ($t = 2.547$, $df=74$; $p < .01$). These results allowed the researcher to reject the first null hypothesis.

Table 3 shows that the male professors made significantly lower ratings of females' decisions than female professors made of female decisions.

TABLE 3

A COMPARISON OF THE FEMALE AND MALE PROFESSORS' RATINGS OF THE FEMALE DECISIONS

Data Source	Mean	Standard Deviation	Calculated t-Value	Significance Level
Females' Ratings of Female Decisions	2.829	1.354		
			t = 2.547	<.01
Males' Ratings of Female Decisions	2.500	1.403		

Results of Testing Hypothesis Number Two

The exact form of the null proposition tested in hypothesis number two was as follows:

Ho_2 The ratings the female faculty members will make of the female decisions on the six scenarios will be significantly lower than the ratings the female faculty members will make of the male decisions on the same scenarios.

The second null hypothesis was tested by comparing the female professors' ratings of the male and female scenario decisions. A preliminary comparison of the two groups' variances showed them to be homogeneous ($F = 1.08$, $df=37/38$; $p > .05$). Since the variances were statistically equal, the two groups' means were compared with a Student's t test for two independent sample means. The results of these calculations are presented in Table 4. This Table also contains the means and standard deviations computed for the two groups' ratings.

The results presented in Table 4 indicate that there was not a significant difference between the female faculty members' ratings of the female and male scenario decisions ($t = 1.200$, $df=75$; $p > .05$). These results would not allow the researcher to reject the second null hypothesis.

An inspection of the means presented in Table 4 will show that the female professors made higher ratings of the female decisions than the male decisions, but the differences were not significant.

TABLE 4

A COMPARISON OF THE FEMALE PROFESSORS' RATINGS OF THE FEMALE AND MALE DECISIONS

Data Source	Mean	Standard Deviation	Calculated t-Value	Significance Level
Females' Ratings of Female Decisions	2.829	1.354		
			t = 1.2000	> .05
Females' Ratings of Male Decisions	2.675	1.404		

Results of Testing Hypothesis Number Three

The exact form of the null proposition tested in hypothesis number three was as follows:

Ho_3 There will be no statistically significant difference between the ratings the female faculty members will make of the female decisions and the ratings the male faculty members will make of the male decisions on the same scenarios

The third null hypothesis was tested by comparing the females' ratings of the female decisions with the males' ratings of the male decisions. A preliminary comparison of the two groups' variances showed them to be homogeneous ($F = 1.094$, $df=37/37$; $p > .05$). Since the variances of the two groups were statistically equal, the means were compared with a Student's t test for two independent sample means. The results of these calculations are presented in Table 5. This Table also contains the means and standard deviations computed for the two groups' ratings.

The results presented in Table 5 indicate that there was not a significant difference between the female faculty members' ratings of the female decisions and the male faculty members' ratings of the male decisions ($t = 0.809$, $df=74$; $p > .05$). These results would not allow the researcher to reject the third null hypothesis.

The data presented in Table 5 show that the females' ratings of female decisions were higher than the males' ratings of male decisions, but they were not significant.

TABLE 5

A COMPARISON OF THE FEMALE PROFESSORS' RATINGS OF FEMALE DECISIONS AND THE MALE PROFESSORS' RATINGS OF MALE DECISIONS

Data Source	Mean	Standard Deviation	Calculated *t*-Value	Significance Level
Females' Ratings of Female Decisions	2.829	1.354		
			$t = 0.809$	$> .05$
Males' Ratings of Male Decisions	2.724	1.417		

Results of Testing Hypothesis Number Four

The exact form of the null proposition tested in hypothesis number four was as follows:

> Ho_4 There will be no statistically significant difference between the ratings the female faculty members will make of the male decisions and the ratings the male faculty members will make of the female decisions on the same scenarios.

The fourth null hypothesis was tested by comparing the female professors' ratings of the male decisions with the male professors' ratings of the female decisions. A preliminary comparison of the two groups' variances showed them to be homogeneous ($F = 1.001$, $df=38/37$; $p > .05$). Since the variances of the two groups were statistically equal, the means were compared with a Student's t test for two independent sample means. The results of these calculations are presented in Table 6. This Table also contains the means and standard deviations computed for the two groups' ratings.

The results presented in Table 6 indicate that there was not a significant difference between the female faculty members' ratings of the male decisions and the male faculty members' ratings of the female decisions ($t = 1.331$, $df=75$; $p > .05$). These results would not allow the researcher to reject the fourth null hypothesis.

The data presented in Table 6 show that the females' ratings of the males' decisions were slightly higher than the males' ratings of the females' decisions.

TABLE 6

A COMPARISON OF THE FEMALE PROFESSORS' RATINGS OF MALE DECISIONS AND MALE PROFESSORS' RATINGS OF FEMALE DECISIONS

Data Source	Mean	Standard Deviation	Calculated t-Value	Significance Level
Females' Ratings of Male Decisions	2.675	1.404		
			t = 1.331	> .05
Males' Ratings of Females Decisions	2.500	1.403		

Results of Testing Hypothesis Number Five

The exact form of the null proposition tested in hypothesis number five was as follows:

Ho_5 The ratings the female faculty members will make of the male decisions on the six scenarios will be significantly higher than the ratings the male faculty members will make of the male decisions on the same scenarios.

The fifth null hypothesis was tested by comparing the male and female professors' ratings of the male scenario decisions. A preliminary comparison of the two groups' variances showed them to be homogeneous ($F = 1.018$, $df=38/37$; $p > .05$). Since the variances were statistically equal, the two groups' means were compared with a Student's t test for two independent sample means. The results of these comparisons are presented in Table 7. This Table also contains the means and standard deviations computed for the two groups' ratings.

The results presented in Table 7 indicate that there was not a significant difference between the female and male faculty members' ratings of the male scenario decisions ($t = 0.373$, $df=75$; $p > .05$). These results would not allow the researcher to reject the fifth null hypothesis.

The data presented in Table 7 show that the female faculty members made slightly lower ratings of the male decisions than those made by the male faculty members, but the difference was not significant.

TABLE 7

A COMPARISON OF THE FEMALE PROFESSORS' RATINGS OF MALE DECISIONS AND THE MALE PROFESSORS' RATINGS OF MALE DECISIONS

Data Source	Mean	Standard Deviation	Calculated t-Value	Significnce Level
Females' Ratings of Male Decisions	2.675	1.404		
			t = 0.373	> .05
Males' Ratings of Male Decisions	2.724	1.417		

Results of Testing Hypothesis Number Six

The exact form of the null proposition tested in hypothesis number six was as follows:

Ho_6 The ratings the male faculty members will make of the male decisions on the six scenarios will be significantly lower than the ratings the male faculty members will make of the female decisions on the same scenarios.

The sixth null hypothesis was tested by comparing the ratings made by the male faculty members on the male and female scenario decisions. A preliminary comparison of the two groups' variances showed them to be homogeneous ($F = 1.019$, $df=37/37$; $p > .05$). Since the variances were statistically equal, the two groups' means were compared with a Student's t test for two independent sample means. The results of these calculations are presented in Table 8. This Table also contains the means and standard deviations of the two groups' ratings.

The results presented in Table 8 indicate that there was a significant difference between the male faculty members' ratings of the male and female scenario decisions ($t = 1.696$, $df=74$; $p < .05$). These results allowed the researcher to reject the sixth null hypothesis.

The descriptive statistics presented in Table 8 show that the mean ratings the male faculty members made of the females' decisions were significantly lower than the mean ratings they made of the males' decisions.

TABLE 8

A COMPARISON OF THE MALE PROFESSORS' RATINGS OF THE MALE AND FEMALE DECISIONS

Data Source	Mean	Standard Deviation	Calculated t-Value	Significance Level
Males' Ratings of Female Decisions	2.500	1.403		
			$t = 1.696$	$< .05$
Males' Ratings of Male Decisions	2.724	1.417		

Summary of Statistical Analysis

In the preliminary survey, questionnaire responses of one-hundred sixty-nine (N=169) male and female professors indicated that sex identity was not an important factor to be considered when selecting educational leaders. The personal characteristics of sex was ranked 24th among a total of 27 qualifications and characteristics listed and rated by the respondents. However, these same professors' ratings of male and female scenario decisions indicated that the sex of the decision maker revealed to a great extent the amount of agreement/disagreement they felt with decisions made in six scenarios. In one instance, the results of hypothesis number one, the female professors made significantly higher ratings of female decisions than they made of male decisions on the same scenarios. In a second instance, the results of hypothesis number six, the male professors reciprocated and made significantly higher ratings of male decisions than they made of female decisions on the same scenarios. Further comparisons between the male and female professors' ratings, hypotheses two through five, showed no significant differences, although each group tended to rate the decisions made by members of their own sex higher than decisions made by members of the opposite sex. However, there were no significant differences between the following faculty members' ratings of scenario decisions:

Ho_2 Females' ratings of Female decisions
vs.
Females' ratings of Male decisions

Ho_3 Females' ratings of Female decisions
vs.
Males' ratings of male decisions

Ho_4 Females' ratings of Male decisions
vs.
Males' ratings of Female decisions

Ho_5 Females' ratings of Male decisions
vs.
Males' ratings of Male decisions

In summarizing the results of testing the hypotheses it may be said that in general both the male and female professors felt that the scenario decisions made by members of their particular sex were better and received higher ratings than decisions made by members of the opposite sex. Further conclusions drawn from these results are presented in Chapter V. The final Chapter also contains a summary of the study, a brief discussion of the results, and implications for further research.

CHAPTER V

SUMMARY, CONCLUSIONS, AND IMPLICATIONS FOR FURTHER RESEARCH

The purpose of the present study was to compare male and female faculty (university level) members' perceptions of decisions made by superordinate male and female administrators within the university power structure. Stated more specifically, the study compared male university faculty members' agreement/disagreement ratings of administrative decisions with female university faculty members' agreement/disagreement ratings of these same administrative decisions. The decision situations were presented to the respondents as scenarios and the sex of the superordinate decision maker was presented in the scenario. Using this format, the researcher was able to explore the extent to which the decision maker's sex identity was affecting the faculty members' ratings of the decisions. The effects of all other independent variables were held constant by random selection of participants and the structure of the research design.

The study was conducted in three phases. In the first phase, male (N=81) and female (N=88) faculty members responded to the Administrative Selection Questionnaire (Appendix A) on which they rated the importance of

characteristics most germane to administrative decision makers.

In the second phase of the study, agreement/disagreement ratings were made on the Faculty Reaction Questionnaires (Appendices B and C) by male (N=76) and female (N=77) professors. The results were used to determine whether the sex of an immediate superior was a significant factor in the participants' agreement/disagreement with the decisions made from the six selected decision scenarios.

In the third phase a comparison was made between the amount of importance which should be placed on sex (as determined by the preliminary survey) and the amount of importance actually given to sex (as determined by testing the six hypotheses).

Results of the first phase of the study showed that the ten most important qualifications and characteristics to be considered when choosing an educational administrator were as follows:

1. Leadership ability
2. Intelligence
3. Leadership/Managerial style
4. Desirable personality traits
5. Personal integrity
6. Ability to communicate with and work with others
7. Administrative skills (specific)
8. Past record as a decision maker

9. Physical health

10. Previous work experience

Further analysis of the results of phase one showed that the variable of sex was considered to be relatively unimportant. It was ranked 24th among the 27 characteristics considered. However, the same professors who had indicated that sex was not an important factor when selecting an administrator made significantly higher ratings of male decisions than female decisions on the same scenarios. In one instance, the results of hypothesis number one, the female professors made significantly higher ratings of female decisions than the male professors made of the same decisions on the scenarios. In a second instance, the results of hypothesis number six, the male professors made significantly higher ratings of male decisions than they made of female decisions on the same scenarios.

Comparisons of other hypotheses failed to show any significant differences, although the professors tended to rate decisions made by same sex deans higher than decisions made by opposite sex deans. However, differences among the ratings were not significant. The conclusions drawn from these results are presented in the following sections.

CONCLUSIONS

From the results obtained from the Administrative Selection Questionnaire, it was concluded that the faculty

members reported sex as an unimportant factor to be considered when selecting an educational administrator. It was further concluded that the factors listed (written in) by the respondents were actually more meaningful in most cases than those listed on the Questionnaire.

The results of testing the hypotheses led to the conclusion that the professors tended to make higher ratings of scenario decisions when they were made by members of their own sex than when the decisions were made by members of the opposite sex. It was further concluded that there was no apparent reason for the male and female professors to make higher ratings of certain decisions other than the fact that the decision was being made by a member of their own sex.

A comparison of the results obtained from the Administrative Selection Questionnaire and the Faculty Reaction Questionnaires led to the conclusion that there was a wide discrepancy between the amount of importance the professors felt SHOULD be placed on the variable of sex identity, and the ACTUAL importance placed on that variable in everyday life situations. The professors indicated sex identity relatively unimportant when considering applications for an administrative position, but they tended to degrade administrative decisions made by members of the opposite sex. This was true of both male and female professors.

These conclusions may be worthwhile to other researchers if they intend to conduct further studies in this particular area. It should also be mentioned that these conclusions should not be generalized beyond the parent population of faculty members at the University of Oklahoma during the 1974-75 academic year.

Discussion

The Administrative Selection Questionnaire (Appendix A) was developed through the combined efforts of several faculty members and administrators at the University of Oklahoma. It was not designed, at that point, as a final version of the instrument. The researcher left spaces at the bottom of the instrument for the professors to write in any qualifications they felt were more applicable. A new version of the Administrative Selection Questionnaire was then assembled.

The Faculty Reaction Questionnaires (Appendices B and C) were developed through the joint efforts of four deans, the university provost, and chairperson of the researcher's committee. The six subsequent scenarios were not meant to be all inclusive but represent areas of decision making encountered by deans. Several male professors commented as to the "stupidity" and "inappropriateness" of the decisions. The researcher did not see this as a weakness of design. In actuality, this was seen as a strength. If the decision situations were "stupid," they would be stupid

regardless of the sex identity of the decision maker.

The researcher felt that the results of the study were representative of the entire faculty because of the number of professors completing and returning the questionnaires. The professors returned 169 usable copies of the first instrument and 153 usable copies of the second instrument. These numbers represent an excellent return in questionnaire research.

Implications for Further Research

Several research possibilities became apparent as the present study unfolded. They are discussed in the following section.

The present study could be conducted on other campuses both in Oklahoma and in other states. Also, a comparison of different types of educational institutions would be interesting (a university, a 4-year liberal arts college, a 4-year private or parochial college, a 2-year junior or community college, a predominantly Black college, a women's college).

The present study could be conducted in three stages. As a preliminary step, a measurement of faculty ratings of open-or-closed mindedness could be taken. Then have the professors complete the Administrative Selection Questionnaire and the Faculty Reaction Questionnaire. It would be interesting to see the relationship between open-or-closed mindedness and perceptions of decisions made by same-and

opposite sex superordinates.

This study was conducted to initiate a move toward more objective research in the area of women's rights, professional women, and women in power positions. In the past, most of the research done on women was post hoc. Also, most of the writing done concerning the prejudice of women in power positions was impassioned and too often lacked research support. If the present study leads the way to objectifying subsequent studies in this area, this researcher will feel gratified.

REFERENCES

Altrocchi, J. Interpersonal perceptions of repressors and sensitizers and components analysis of assumed similarity scores. J. Abnorm. Soc. Psychol., 1961, 62, pp. 528-534.

Asch, S. E. Forming impressions of personality. J. Abnorm. Soc. Psychol., 1946, 41, pp. 258-290.

Asch, S. E. Social psychology. Englewood Cliffs, New Jersey: Prentice-Hall, 1952.

Astin, H. S. & Bayer, A. E. Sex discrimination in academae. Education record, 1972, (Spr.), 53 (2), pp. 101-118.

Backman, C. W., & Secord, P. F. The effect of perceived liking on interpersonal attraction. Hum. Relat., 1959, 12, pp. 379-384.

Balmer, L. E. The influence of superintendents and teachers upon attitudes of elementary school principals. Diss. Abstr. Inter, 1972 (Mar.), 32 (9-a) pp. 4853-4857.

Beilin, H. Impression formation under varied set and stimulus--traits conditions. J. Soc. Psychol., 1963, 60, pp. 39-55.

Bennett, R., Price, R. D., & Lindskold, S. Is the moral revolution an illusion? Decisions for self and others in situations involving values. Proceedings of the 81st Annual Convention of the Amer. Psychol. Assoc., Montreal, Canada, 1973, 8, pp. 311-312.

Bieri, J. Complexity-simplicity as a personality variable in cognitive and preferential behavior. In D. W. Fiske & S. R. Maddi (Eds.) Functions of varied experience. Homewood, Ill.: Dorsey Press, 1961. pp. 355-379.

Broverman, I. K. Sex role stereotypes: Accurent appraisal. Journal of Social Issues, 1972, 28 (2), pp. 59-78.

Bruner, J. S., & Taguiri, R. The perception of people. In G. Lindzey (Ed.), Handbook of Social Psychology. pp. 601-633.

Campbell, J. D., & Yarrow, M. R. Perceptual and behavioral correlates of social effectiveness. Sociometry, 1961, 25, pp. 1-20.

Chowdhry, K., & Newcomb, T. M. The relative abilities of leaders and non-leaders to estimate opinions of their own group. J. Abnorm. Soc. Psychol., 1952, 47, pp. 51-57.

Cronbach, L. J. Processes affecting scores on "understanding others" and "assumed similarity." Psychol. Bull., 1955, 52, pp. 117-193.

Cronbach, L. J. Proposals leading to analytic treatment of social perception scores. In R. Tagiuri & L. Petrullo (Eds.), Person perception and interpersonal behavior. Stanford, Calif.: Stanford Univ. Press, 1958, pp. 353-380.

Cvetkovich, G. Effects of sex on decision policies used for self and decision policies used for other persons. Psychonomic Science, 1972, 26, pp. 319-320.

Dymond, R. S. A scale for the measurement of empathic ability. J. Consult. Psychol., 1949, 13, pp. 127-133.

Dymond, R. F., Hughes, A. S., & Raabe, V. L. Measurable changes in empathy with age, J. Consult. Psychol., 1952. 16, pp. 202-206.

Finn, J. D. Expectation and the educational environment. Review of Educational Research, 1972 (Sum.), 42 (3), pp. 387-410.

Freese, J. T., West, C. K. Congruence, empathy, and regard: A comparison of adolescent ratings with teacher self-ratings, 1972 (Win.), 7 (28), pp. 525-529.

Gage, N. L., & Cronbach. L. J. Conceptual and methodlogical problems in interpersonal perception. Psychol. Rev., 1955, 62. pp. 411-422.

Gardner, R. W., & Schoen, R. A. Differentiation and abstraction in concept formation. Psychol. Monogr., 1962, 76, No. 41 (Whole No. 560).

Gates, G. S. An experimental study of the growth of social perception. J. Educ. Psychol., 1923, 14, pp. 449-462.

Gitter, A. G., Black, H., & Mostofsky, D. Race and sex in the perception of emotion. J. Soc. Issues, 1972, 28, pp. 63-78.

Gollin, E. S. Organizational characteristics of social judgement: A developmental investigation. J. Pers., 1958, 26, pp. 139-154.

Gollin, E. S., & Rosenberg, S. Concept formation and impressions of personality. J. Abnorm. Soc. Psychol., 1956, 52, pp. 39-42.

Griffin, J. D. The principal as manager: A study of teachers' and principals' perceptions of managerial behavioral. Diss. Abstr. Inter., 1972 (Nov.), 33 (5-a), pp. 2168-2169.

Gross, C. F. Intrajudge consistency in ratings of heterogeneous persons. J. Abnorm. Soc. Psychol., 1961, 62, pp. 605-610.

Gubasta, J. L. The leader and planning behaviors of college and university chief excutives. Diss. Abstr. Inter. 1972 (Apr.), 32 (10-a) P. 5497.

Hansen, L. H., Borgatta, E. F., & Lambert, P. Teacher perceptions of intra-occupational status relationships among elementary, jr. high , and senior high school teaching positions. Journal of Experimental Education, 1971 (Win.), 40 (2) pp. 51-56.

Haire, M., & Grunes, W. F. Perceptual defenses: Processes protecting an organized perception of another personality. Hum. Relat., 1950, 3, pp. 403-412.

Hall, K. E. Sex differences in initiation and influence in decision-making among prospective teachers. Diss. Abstr. Inter. 1973 (Feb.), 33 (8-a) pp. 3952-3953.

Harris, A. Women's role in contemporary society. New York: Avon Books, 1972. P. 587.

Harvey, O. J., Hunt, D. E., & Schroder, H. M. Conceptual systems and personality organization. New York: John Wiley & Sons, 1961.

Hastorf, A. H., Richardson, S. A., & Dornbusch, S. M. The problem of relevance in the study of person perception. In R. Tagiuri & L. Petrullo (Eds.), Person perception and interpersonal behavior. Stanford, Calif: Stanford Univ. Press, 1958. pp. 54-62.

Heider, F. The psychology of interpersonal relations. New York: John Wiley & Sons, 1952. (a)

Heider, F. Social perception and phenomenal causality. In R. Tagiuri and L. Petrullo (Eds.), Person perception and interpersonal behavior. Stanford, Calif.: Stanford Univ. Prsss, 1958, pp. 1-21. (b)

Holy Bible. I Corinthians 11th chapter and 8th verse. P. 1061. (King James Version)

Holzman, P. S., & Gardner, R. W. Leveling and repression. J. Abnorm. Soc. Psychol., 1959, 59, pp. 151-155.

Horwitz, M. The veridicality of liking and disliking. In R. Tagiuri & L. Petrullo (Eds.), Person perception and interpersonal behavior. Stanford, Calif.: Stanford Univ. Press, 1958. pp. 191-209.

Jackson, D. N., & Messick, S. Individual differences in social perception. Brit. J. Soc. Clin. Psycho., 1963, 2, pp. 1-10.

Johnson, F. N. A comparison of the perceptions of sixth-grade male teachers, sixth-grade female teachers, elementary school principals, and school psychologists regarding their own needs and those of their pupils. Diss. Abstr. Inter., 1971 (July), 32 (1-a), pp. 241-242.

Jones, E. E., & de Charms, R. Changes in social perceptions as a function of the personal relevance of behavior. Sociometry, 1957, 20, pp. 75-85.

Kastenbaum, A. An experimental study of the formation of impressions of personality. Unpublished manuscript, Graduate Faculty of Political and Social Science, New School for Social Research, 1951.

Kelly, G. A. The psychology of personal constructs. New York: Norton, 1955, 2 vols.

Kerlinger, F. N. Foundations of behavioral research. New York: Holt, Rinehart, & Winston, Inc. 1964.

Kimmel, D., & Stein, M. I. Variations in self-rated personality needs as a function of sex, age, and socio-economic status from adolescence to middle age. Proceedings of the 81st Annual Convention of the Amer. Psychol. Assoc., Montreal, Canada, 1973, 8, pp. 781-782.

Kogan, N., & Shelton, F. E. Differential cue value of age and occupation in impression formation. Psychol. Rep., 1960, 7, pp. 203-216.

Kohn, A. E., & Fiedler, F. E. Age and sex differneces in the perception of persons. Sociometry, 1961, 24, pp. 157-164.

Koltuv, B. B. Some characteristics of intrajudge trait intercorrelations. Psychol. Monogr., 1962, 76, No. 33 (Whole No. 552).

Kretschmer, E. Physique and character. New York: Harcourt, Brace & Co., 1925.

Logan, A. A. Universities told they must grant equal opportunity to women. Chronicle of Higher Education. 1974, (March), pp. 120-140.

Lohman, K. D. The ideal colleague: An analysis of university faculty perception. Diss. Abstr. Inter. 1972 (Jan.), 32 (7-b), pp. 4188-4189.

Luchins, A. S. Forming impressions of personality: A critique. J. Abonrm. Soc. Psychol., 1948, 43, pp. 318-325.

Mayo, C. W. & Crockett, W. H. Cognitive complexity and primacy-recency effects in impression formation. J. Abnorm. Soc. Psychol, 1964, 68, pp. 335-338.

Miller, G. H., & Pyke, S. W. Sex, matrix variations, and perceived effects in mixed-motive games. J. Conflict Resolution, 1973, 17, pp. 335-349.

Newcomb, T. M. The acquaintace process. New York: Holt, Rinehart, and Winston, 1961.

Moebius, P. Concerning the physicological and intellectual feebleness of women, Halle, 1907.

Montagu, A. The natural superiority of women, New York: The McMillan Company, 1956.

Norton, E. H. A strategy for change in women's role in contemporary society. New York: Avon Books, 1972.

Olesker, W., & Balter, L. Sex and empathy. J. Counsel. Psychol., 1972, 19, pp. 559-592.

Pastore, N. Attributed characteristics of liked and disliked persons. J. Soc. Psychol., 1960, 52, pp. 157-163. (a)

Pastore, N. A note on changing toward liked and disliked persons. J. Soc. Psychol, 1960, 52, pp. 173-175. (b)

Pepitione, A. Attributions of causality, social attitudes, and cognitive matching processes. In R. Tagiuri & L. Petrullo (Eds), Person perception and interpersonal behavior. Stanford, Calif.: Stanford Univ. Press, 1958, pp. 258-276.

Pepitone, A., & Hayden, R. Some evidence for conflict resolution in impression formation. J. Abnorm. Soc. Psychol., 1955, 51, pp. 302-307.

Rabin, H. M. Perception of others by adjusted and maladjusted subjects as reflected in measures of perceptual space. J. Soc. Psychol., 1962, pp. 149-158.

Rommetveit, R. Selectivity, intuition, and halo effects in social perception. Oslo, Norway: Oslo Univ. Press, 1960.

Rosenthal, R. Pygmalion in the class room. New York: Holt, Rinehart, & Winston, 1965.

Sarbin, T. R. Role theory. In G. Lindzey (Ed.), Handbook of Social Psychology. Vol. 1. Cambridge, Mass.: Addison-Wesley, 1954, pp. 223-258.

Secord, P. F. The role of facial features in interpersonal perception. In R. Tagiuri & L. Petrullo (Eds.), Person perception and interpersonal behavior. Stanford, Calif.: Stanford Univ. Press, 1958, pp. 300-315.

Secord, P. F. Stereotyping and favorableness in the perception of negro faces. J. Abnorm. Soc. Psychol., 1959, 59, pp. 309-315.

Secord, P. F. Perception of similarity between self and alter. Paper presented at Western Psychol. Assoc., Portland, Oregon, (April), 1964.

Secord, P. F., & Backman, C. W. Social Psychology. New York: McGraw-Hill Co., 1964.

Secord, P. F., & Berscheid, E. S. Stereotyping and the generality of implicit personality theory. J. Pers., 1963, 31, pp. 65-73.

Secord, P. F., Bevan, W., & Katz, B. The negro stereotype and perceptual accentuation. J. Abnorm. Soc. Psychol., 1956, 53, pp. 78-83.

Secord, P. F., & Muthard, J. E. Personalities in faces: A descriptive analysis of the perception of women's faces and the identification of some physiognomic determinants. J. Psychol., 1955, 39, pp. 369-278.

Secord, P. F., Stritch, T. M, & Johnson, L. The role of metaphorical generalization and congruency in the perception of facial characteristics. J. Soc. Psychol., 1960, 52, pp. 329-337.

Sheldon, W. H., Stevens, S. S., & Tucker, W. B. The varieties of human physique: An introduction to constitutional psychology. New York: Harper & Row, 1940.

Shrauger, S., & Altrocchi, J. The personality of the perceiver as a factor in person perception. Psychol. Bull., 1964, 62, pp. 289-308.

Siever, R. G., Loomis, R. J. & Neidt, C. O. Role perceptions of department chairman in two land grant universites. J. of Educational Research, 1972 (May), 65 (9), pp. 405-410.

Taft, R. Some correlates of the ability to make accurate social judgements. Unpublished doctoral dissertation, University of California, 1950.

Taft, R. The ability to judge people. Psychol. Bull., 1955, 52, pp. 1-23.

Tagiuri, R. Introduction. In R. Tagiuri & L. Petrullo (Eds.), Person perception and interpersonal behavior. Stanford, Calif.: Stanford Univ. Press, 1958.

Tagiuri, R., & Petrullo, L. Person perception and interpersonal behavior. Stanford, Calif.: Stanford Univ. Press. 1958.

Tajfel, H., & Wilkes, A. L. Salience of attributes and commitment to extreme judgements in the perception of people. Brit. J. Soc. Clin. Psychol., 1964, 3, pp. 40-49.

Tripodi, T., & Bieri, J. Cognitive complexity as a function of own and provided constructs. Psychol. Rep., 1963, 13, P. 26.

Veness, T., & Brierley, D. W. Forming impressions: Two experiments. Brit. J. Soc. Clin. Psychol., 1963, 2, pp. 11-19.

Winshner, J. Reanalysis of "impressions of personality." Psychol, Rev., 1960, 67, pp. 96-112.

Wolin, L. R. An analysis of the content of interpersonal perception. Unpublished doctoral dissertation, Cornell University, 1956.

APPENDIX A

ADMINISTRATIVE SELECTION QUESTIONNAIRE

Appendix A

ADMINISTRATIVE SELECTION QUESTIONNAIRE

Directions: The following list contains some of the characteristics and qualifications which are considered to be important factors when choosing educational decision makers such as Deans, Departmental Chairpersons, etc. Please rate each of the qualifications and characteristics listed by marking one of the choice points on the seven-point continuum following each. You may also write in (and rate) additional characteristics or qualifications which are not included in the list. Be sure to rate EACH of the qualifications and characteristics listed or written in.

(7) Extremely Important
(1) Not Important at All

(1) Age . . . . . (7) ——|——|——|——|——|——|(1)
(2) Race or Ethnic Origin . . . . . (7) ——|——|——|——|——|——|(1)
(3) Sex . . . . . (7) ——|——|——|——|——|——|(1)
(4) Marital Status (7) ——|——|——|——|——|——|(1)
(5) Religion . . . . . (7) ——|——|——|——|——|——|(1)
(6) Type of Previous Administrative Experiences . . . (7) ——|——|——|——|——|——|(1)
(7) Number of Years of Administrative Experience . . . (7) ——|——|——|——|——|——|(1)
(8) Previous Work Experience . . . . . (7) ——|——|——|——|——|——|(1)
(9) Past Record as a Decision Maker . . . . . (7) ——|——|——|——|——|——|(1)
(10) Number of Years in Major Field of Interest . . . . (7) ——|——|——|——|——|——|(1)
(11) Number of Memberships in Professional Organizations (7) ——|——|——|——|——|——|(1)
(12) Number of Service Clubs Affiliated With . . . . . (7) ——|——|——|——|——|——|(1)
(13) College or University where Individual Received Doctorate ——|——|——|——|——|——|(1)
(14) Overall Grade-Point-Average (GPA) in Graduate School ——|——|——|——|——|——|(1)
(15) Academic Area of Doctoral Study . . . . . (7) ——|——|——|——|——|——|(1)
(16) Graduate Courses Included in the Doctoral Program . (7) ——|——|——|——|——|——|(1)
(17) Number of Publications . . . . . (7) ——|——|——|——|——|——|(1)
(18) Recency and Type of Publications . . . . . (7) ——|——|——|——|——|——|(1)
(19) _____ (7) ——|——|——|——|——|——|(1)
(20) _____ (7) ——|——|——|——|——|——|(1)
(21) _____ (7) ——|——|——|——|——|——|(1)
(22) _____ (7) ——|——|——|——|——|——|(1)

APPENDIX B

FACULTY REACTION QUESTIONNAIRE
(MALE VERSION)

Appendix B

FACULTY REACTION QUESTIONNAIRE

We are trying to determine faculty reactions to certain administrative decisions and/or actions taken by educational administrators. Several scenarios are presented for your consideration. While the names are fictitious, the situations are factual reports taken from Departmental records of well known colleges and universities. If the Dean in each scenario were your immediate superior, what would be your reaction to the decision made?

Directions: Please indicate your opinion of the action taken in each of the scenarios presented below. Circle the point on the continuum which most accurately reflects your opinion of the administrator's actions.

Strongly Agree	= SA
Agree	= A
Undecided	= U
Disagree	= D
Strongly Disagree	= SD

	(Circle One)				
1. At the last departmental meeting, Dean John White, openly criticized the lack of innovative teaching techniques on the part of many faculty members	SA	A	U	D	SD
2. At the last departmental meeting, Dean David Smith, openly criticized faculty members for not being in their offices during their posted "office hours."	SA	A	U	D	SD
3. Dean James Groff, implemented an accounting procedure requiring each faculty member to submit monthly records of the financial transactions of their office	SA	A	U	D	SD
4. At the most recent meeting of the AAUP, Dean Howard Hackett, secretly invited a nationally known professor to interview for a vacant chairperson's position within the Department	SA	A	U	D	SD
5. Dean Phillip Spanniger, recently informed two faculty members that they would have to make their course offerings and content more current and applicable before they could be recommended for tenure	SA	A	U	D	SD
6. Due to budgetary cutbacks, Dean Charles Brown, decided to eliminate one of the six existing divisions of the department based on his personal observations of each	SA	A	U	D	SD

APPENDIX C

FACULTY REACTION QUESTIONNAIRE
(FEMALE VERSION)

Appendix C

FACULTY REACTION QUESTIONNAIRE

We are trying to determine faculty reactions to certain administrative decisions and/or actions taken by educational administrators. Several scenarios are presented for your consideration. While the names are fictitious, the situations are factual reports taken from Departmental records of well known colleges and universities. If the Dean in each scenario were your immediate superior, what would be your reaction to the decision made?

Directions: Please indicate your opinion of the action taken in each of the scenarios presented below. Circle the point on the continuum which most accurately reflects your opinion of the administrator's actions.

Strongly Agree	= SA
Agree	= A
Undecided	= U
Disagree	= D
Strongly Disagree	= SD

		(Circle One)				
1.	At the last departmental meeting, Dean Sara White, openly criticized the lack of innovative teaching techniques on the part of many faculty members	SA	A	U	D	SD
2.	At the last departmental meeting, Dean Joan Smith, openly criticized faculty members for not being in their offices during their posted "office hours."	SA	A	U	D	SD
3.	Dean Jane Greff, implemented an accounting procedure requiring each faculty member to submit monthly records of the financial transactions of their office	SA	A	U	D	SD
4.	At the most recent meeting of the AAUP, Dean Janet Hackett, secretly invited a nationally known porfessor to interview for a vacant chairperson's position within the Department	SA	A	U	D	SD
5.	Dean Karen Spanniger, recently informed two faculty members that they would have to make their course offerings and content more current and applicable before they could be recommended for tenure	SA	A	U	D	SD
6.	Due to budgetary cutbacks, Dean Joyce Brown, decided to eliminate one of the six existing divisions of the department based on her personal observations of each	SA	A	U	D	SD

APPENDIX D

IBM CARD FORMAT AND 80-80 LISTING OF DATA CARDS FROM THE ADMINISTRATIVE SELECTION QUESTIONNAIRE

Appendix D

CARD FORMAT USED IN CODING DATA FROM THE ADMINISTRATIVE SELECTION QUESTIONNAIRE

QUESTIONNAIRE INFORMATION	CARD COLUMNS	RANGE OF VALUES
1. Respondent's Sex	1	1-2
2. Questionnaire Number	2-3	01-99
3. Rating of "Age"	4	1-7
4. Rating of "Race or Ethnic Origin"	5	1-7
5. Rating of "Sex"	6	1-7
6. Rating of "Marital Status"	7	1-7
7. Rating of "Religion"	8	1-7
8. Rating of "Type of Previous Administrative Experiences"	9	1-7
9. Rating of "Number of Years of Administrative Experience"	10	1-7
10. Rating of "Previous Work Experience"	11	1-7
11. Rating of "Past Record as a Decision Maker"	12	1-7
12. Rating of "Number of Years in Major Field of Interest"	13	1-7
13. Rating of "Number of Memberships in Professional Organizations"	14	1-7
14. Rating of "Number of Service Clubs Affiliated With"	15	1-7
15. Rating of "College or University where Individual Received Doctorate"	16	1-7
16. Rating of "Overall GPA in Graduate School"	17	1-7
17. Rating of "Academic Area of Doctoral Study"	18	1-7
18. Rating of "Graduate Courses Included in Doctoral Program"	19	1-7
19. Rating of "Number of Publications"	20	1-7
20. Category and Rating of First Option	21	1-7
21. Category and Rating of Second Option	22-23	1-7
22. Category and Rating of Third Option	24-25	1-7
23. Category and Rating of Fourth Option	26-27	1-7
24. Category and Rating of Fifth Option	28-29	1-7
25. Category and Rating of Sixth Option	30-31	1-7
26. Category and Rating of Seventh Option	32-33	1-7
27. Category and Rating of Eighth Option	34-35	1-7

Appendix D (Cont'd)

THE 80-80 LISTING OF THE IBM DATA CARDS FROM THE ADMINISTRATIVE SELECTION QUESTIONNAIRE

```
1012111144565444232331 7
1024444454757554233331 5
1034111147775117651 1
1041111175775214555 22
1053341133455215555223767 8757
1065111155553532345 22
1074114173474123444325414 94
1084222276676222232 55
1091111177774314444 47
1104341166675326533 11
1115111153575413443 3567
1126555577777755677 67
1134112376776556566 55
1144111177777665565 66
1155111166775656555661747
1162111177575555644226717
1172111154776545563 12
1182111175773312311 66
1193211165766414231 2216
1204111175775422122 22
1216572454423627305 77
1221111154675434511 4495
1235444477667544555335717 6665
1242144177774542251 44
1252111475474423254 44
1262111175775223334 24
1271111122371111111115757576767 87
1285111176776656667 56
1292771111571112255 11
1305111163772322221 11
1313111164675225555251757
1325221121673113333 21
1336111175676624555 35
1341111142654221222 11
1352111154666416625 54
1362111331743343434 1217
1371111154444116433 44
1381111133547316777 66
1392111144771214422341757 8767
1405661152455111123 44
1412111164474434666 56
1423221253745121442 34
1432211154454313333 35
1442111154454111131333757 67
```

Appendix D (Cont'd)

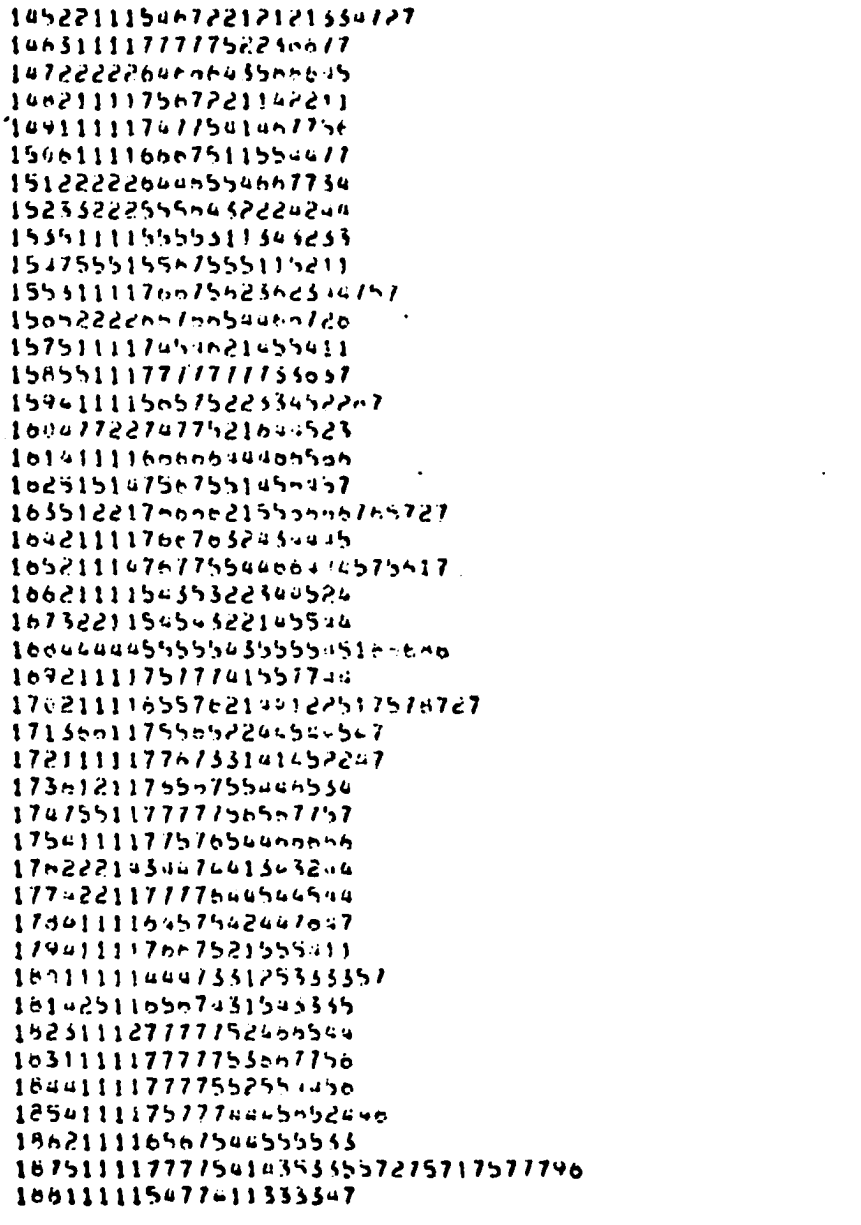

Appendix D (Cont'd)



Appendix D (Cont'd)

```
242171134235321111111
243612116667321113123 37
244413524455521212255
245111113447211514233
246111114345442111111
247611117576433554445
248111111117111423566
249111117777532553611
250444447677644455644
251411116575534213444161 0
252355112232221223322
253211115557551114444
254322227577651525206
255512115457531342244555452594
256311117377331114135561747
257441637477451747446 57
258152115577211513111
259414515477511554544875686 67
260732117477411756655
261211116677252122133173 7
262311117667111131111572 7
263411417667321734445
264311117777631455544
265211116567232222211
266211317777621113222
267422116377511222111
268314667557721444525172627 47
269211316277651224237
270211116654554224455
271111113333311111111
272511117777743757557575 71795
273311115333321766655
274522214377521313155
275556556667664345555
276411617767433744334
277655627777765655656
278311224435232544534 27
279111114567522445436
280111117777222222245
281511115455531334433
```

APPENDIX E

IBM CARD FORMAT AND 80-80 LISTING OF DATA CARDS FROM THE FACULTY REACTION QUESTIONNAIRES

Appendix E

IBM CARD FORMAT USED IN CODING DATA FROM THE FACULTY REACTION QUESTIONNAIRE

Questionnaire Information	Card Columns	Range of Values
1. Data Group	1	1-4
2. Questionnaire Number	2-3	01-50
3. Rating of First Scenario	4	1-5
4. Rating of Second Scenario	5	1-5
5. Rating of Third Scenario	6	1-5
6. Rating of Fourth Scenario	7	1-5
7. Rating of Fifth Scenario	8	1-5
8. Rating of Sixth Scenario	9	1-5

Appendix E (Cont'd)

101555241
102443343
103423342
104123251
105541355
106532142
107111111
108452111
109215151
110122141
111424132
112244451
115113151
114341232
115243241
116554141
117225141
118554151
119444141
120442242
121455445
122343232
123555335
124244121
125245344
126423551
127425243
128254242
129254242
130443521
131444241
132144141
133243342
134554254
135113131
136124141
137532242
138244141

Appendix E (Cont'd)

201413111
202343241
203442142
204411221
205441551
206222141
206522142
206642142
209454152
210241141
211451151
212511142
215114135
214544241
215334111
216445141
217224145
218121432
219535451
220443241
221444351
222123151
223355144
224344241
225644121
226654141
227353151
228554141
229111141
231222343
231421141
232223141
233544141
234443141
235243142
236124141
237343141
238555252
239452142

Appendix E (Cont'd)

$01555111
$02244133
$03224122
$04454241
$05443221
$06532121
$07251141
$08432251
$09441141
$10551111
$11543143
$12443151
$13453241
$14453153
$15245245
$16441451
$17543453
$18241151
$19121121
$20244242
$21443141
$22555451
$23144252
$24444232
$25242122
$26111121
$27111111
$28121211
$29121111
$30111111
$31244244
$32531143
$33123131
$34521141
$35441142
$36224242
$37453151
$38111111

Appendix E (Cont'd)

THE 80-80 LISTING OF THE IBM DATA CARDS FROM THE FACULTY REACTION QUESTIONNAIRES

401244152
402141541
403111111
404441113
405554154
406121143
407351431
408351251
409451111
410333213
411343124
412325131
413442142
414453141
415441142
416244242
417111455
418141331
419441142
420221141
421222222
422452245
423344354
424211142
425231411
426254111
427[illegible]43
428451151
429221411
431555551
431444142
432242111
433444444
434451341
435552111
436554352
437503133
438555453