INFORMATION TO USERS

This dissertation was produced from a microfilm copy of the original document. While the most advanced technoiogical means to photograph and reproduce this document have been used, the quality is heavily dependent upon the quality of the original submitted.

The following explanation of techniques is provided to help you understand markings or patterns which may appear on this reproduction.

1. The sign or "target" for pages apparently lacking from the document photographed is "Missing Page(s)". If it was possible to obtain the missing page(s) or section, they are spliced into the film along with adjacent pages. This may have necessitated cutting thru an image and duplicating adjacent pages to insure you complete continuity.

2. When an image on the film is obliterated with a large round black mark, it is an indication that the photographer suspected that the copy may have moved during exposure and thus cause a blurred image. You will find a good image of the page in the adjacent frame.

3. When a map, drawing or chart, etc., was part of the material being photographed the photographer followed a definite method in "sectioning" the material. It is customary to begin photoing at the upper left hand corner of a large sheet and to continue photoing from left to right in equal sections with a small overlap. If necessary, sectioning is continued again — beginning below the first row and continuing on until complete.

4. The majority of users indicate that the textual content is of greatest value, however, a somewhat higher quality reproduction could be made from "photographs" if essential to the understanding of the dissertation. Silver prints of "photographs" may be ordered at additional charge by writing the Order Department, giving the catalog number, title, author and specific pages you wish reproduced.

University Microfilms

300 North Zeeb Road
Ann Arbor, Michigan 48106

A Xerox Education Company

Downloaded from SHAREOK. Persistent Handle URL: https://hdl.handle.net/11244/3287

72-22,446

MILLER, Edward P., 1924-
A METHOD TO DETERMINE EFFECTIVENESS OF SPECIAL LIBRARY OPERATIONS.

The University of Oklahoma, Ph.D., 1972
Library Science

University Microfilms, A XEROX Company, Ann Arbor, Michigan

© Copyrighted by

Edward P. Miller

1972

THIS DISSERTATION HAS BEEN MICROFILMED EXACTLY AS RECEIVED

THE UNIVERSITY OF OKLAHOMA

GRADUATE COLLEGE

A METHOD TO DETERMINE EFFECTIVENESS OF SPECIAL LIBRARY OPERATIONS

A DISSERTATION

SUBMITTED TO THE GRADUATE FACULTY

in partial fulfillment of the requirements for the

degree of

DOCTOR OF PHILOSOPHY

BY

EDWARD P. MILLER

Norman, Oklahoma

1972

A METHOD TO DETERMINE EFFECTIVENESS OF

SPECIAL LIBRARY OPERATIONS

APPROVED BY

DISSERTATION COMMITTEE

PLEASE NOTE:

Some pages may have

indistinct print.

Filmed as received.

University Microfilms, A Xerox Education Company

ACKNOWLEDGEMENTS

I am grateful to many for encouragment and support in the research leading to the completion of this investigation. Dr. Raymond P. Lutz, Director of the Library Systems Management Program of the University of Oklahoma has been advisor, counsellor, friend and weeping wall as chairman of my advisory committee. A prime mover in the establishment of the interdisciplinary program within which this research was performed, Dr. Lutz has helped to provide the course of study and the encouragment necessary to its successful completion.

The Office of Education of the U.S. Department of Health, Education and Welfare provided fellowship support to make the investigation possible. The Schools of Library Science and Industrial Engineering of the University of Oklahoma joined in the interdisciplinary effort to provide the locale with an imaginative approach to library systems management education.

I am grateful to Dr. Arthur McAnally, Director of the University of Oklahoma Libraries and Dr. James Zink, Associate Director, for permission to study a branch agency and for expenditure of time and effort in contributing necessary inputs to the research investigation. Dr. Robert Petry, Chairman, Dr. Keith Carroll and the faculty

of the Physics Department receive my gratitude for their generous expenditure of time and energy in providing data without which the research would have been impossible.

I am indeed indebted to Dr. Charles Gettys and Mr. James Steiger of the Psychology Department at the University of Oklahoma for contributions above and beyond the responsibilities of faculty and friends.

To Dr. A. Alan B. Pritsker, whom I have never met, Director of the Center for Large Scale Systems, Purdue University, developer of the Graphical Evaluation and Review Technique (GERT), I am deeply grateful. His advice and counsel by mail and provision of the computer program to solve the GERT network problem made the final analysis of the method practicable.

And finally, I thank the members of my advisory committee for their great assistance and gentle criticism throughout the development of the research and its successful completion.

Norman, Oklahoma
1972

TABLE OF CONTENTS

CHAPTER		PAGE
	Acknowledgements	iii
I.	INTRODUCTION.	1
	A. Objective.	1
	B. Problem Statement.	1
	C. Basic Assumptions.	3
	D. Definitions of a Special Library	4
	E. Limits of User/Library Interface	7
II.	BACKGROUND.	11
	A. Literature Review.	11
	B. User Studies	13
	C. Statistical Analyses	16
	D. Systems Analysis	18
	E. A Suggested Approach	21
	1. The user as decision maker.	21
	2. Decision trees.	25
	3. Graphical Evaluation and Review Technique (GERT).	27
	4. Probabilistic Information Processing. . .	31
III.	A METHOD TO DETERMINE EFFECTIVENESS OF LIBRARY OPERATIONS.	35
	A. Introduction	35
	B. The Method Design.	36

CHAPTER PAGE

IV. THE METHOD APPLIED. 62

A. The Physics Library at the University of Oklahoma. 62

B. The Method Application 69

V. INTERPRETATIONS, SUMMARY AND CONCLUSIONS. 89

REFERENCES AND BIBLIOGRAPHY 122

APPENDICES:

I. Exhibits 137

II. Computer Programs. 151

III. Computer Inputs and Outputs. 158

LIST OF TABLES

TABLE PAGE

1. Significant Aspects Ranked. 75

LIST OF FIGURES

FIGURE PAGE

1. Flow Chart of User/Library Interface. 37
2. Detailed Flow Chart of User/Library Interface . . 39
3. User Decision Tree for Five Alternatives, One Phase 56
4. User Decision Tree for Five Alternatives, Three Phases. 57
5. GERT Network for Five Alternatives, Three Phases. 59
6. Layout of Physics Library 63
7. Network GEN1. 84
8. Network RHO2. 86
9. Network C&S 87

CHAPTER I

INTRODUCTION

A. Objectives. The objective of this study was to develop a methodology for determining effectiveness of special library operations. Principal ingredient for evaluation measures consisted of subjective opinions of users toward alternatives for changing influential aspects of special library operations. Essential for effectiveness measures determination was a future behavior estimation by users and the library administration's knowledgeable estimation of probabilities for alternative realization. A probabilistic information processing technique was used to derive inputs for decision points in a GERT network of the user/library interface.

B. Problem Statement. Special libraries are often considered by their parent organizations as expensive elements in overhead cost estimates. Whether or not this is as it should be, any company with a library, be it large or small, will demand the efficient allocation of resources within the library to produce optimum benefits to the parent.

Benefits will be realized by the company from actual use of the library by its personnel. Usage might be for personal edification or directly job related, but in

either case a benefit will accrue to the company. With increased usage of the library, then, a concommitant increased benefit will be realized by the company in achieving its total objectives.

In order for the manager of a company library to make intelligent decisions to benefit the company, he must have some means to determine the influence of particular aspects of library operation on the behavior of the library users among company personnel. This will involve identification of influential parameters of library operations: determination of which alternatives from among the feasible courses of action open will be most effective in raising the probabilities for uses of the library.

The essential problem was the need for some means to determine the effect of combinations of feasible alternatives on probabilities that the population of users of a company library would complete their library use processes.

Sub-problems considered in the determination included the quantification of the influences of these combinations of alternatives in some form which could be related to the cost for the strategies suggested. A further problem treated was that of insuring user-generated information about the influential aspects as opposed to information based on a "seat of the pants" or intuitive investigation

by the library manager, and producing a methodology for a "concert" investigation by user/librarian cooperation.

C. Basic Assumptions. It was assumed that a library manager would be interested in increasing the use of library service and facilities. One measure for an increase in this usage could be an increase in the probability that users would complete each use of the library.

It was further assumed that particular aspects of library service and/or facilities would influence user behavior. In this regard, users were considered as capable of estimating the effect on their behavior when confronted with alternatives in particular aspects.

Basically, then, it was assumed that user opinion could provide a measure of effectiveness for the alternatives offered, exclusive of public relations programs and orders from higher-ups in the organization.

The study was restricted to aspects of library operation. Information content of the materials in the collection and the value to the user were outside the scope of this investigation. Relevance, recall and turn around time as specific entities in the retrieval process were also outside the scope except as they were included in the psychological sets in users' minds and influenced their opinions.

D. Definition of a Special Library. A special library in a Research and Development Department or Division of an industrial concern can be defined as serving a specialized clientele with a specialized body of information (subject discipline). Although the Special Libraries brochure, Profiles of Special Libraries, "DEF Industrial Corp., R & D Division" (69, p. 8), calls for a professional staff and assistants, it is quite common for such libraries to be manned by one person, often without the professional education considered necessary for a personnel designation "professional."

Such a library encompasses a small, working collection of materials. By this is meant that the materials retained are used almost constantly and/or have a high demand for reference on short notice. Little used materials are less apt to be kept in the main area of the library facility. Materials retained in the collection are usually closely allied to the subject areas of interest to the users in the light of the R & D mission served. Usually, retention policies are designed to maintain currency and relevance of information.

An industrial R & D library includes the various forms found in any library: books, journals, report literature, special papers, general reference works in the field of interest, possibly microforms, and vertical file materials.

The users of the facility regularly publish results of their research either in journals of the field or in company reports. They comprise an identifiable group of company personnel.

The library is used generally for literature searching and bibliography preparation related directly to research programs and projects on which the users are currently working. Use is made generally during regular business hours, but the library is often available to special workers during hours when no staff is available for assisting users.* Open shelf policy allows users to browse the collection at will or to call for assistance.

In many special libraries of this sort some attempt is made by the library staff to provide a current awareness function. This means that new acquisitions, articles of special note, service aspects available, and the like, are described and drawn to the attention of users and potential users on a regular basis. In some there is also an effort to provide selective dissemination of information (SDI)

---

*Dr. Paul Kruse, Director of the Samuel Roberts Noble Foundation, Biomedical Division, Ardmore, Oklahoma, insists on general access to the Division Library for all research staff at any time. His is a common view among research directors. (From a speech "What Management Expects of Libraries and Librarians," Special Libraries Association, Oklahoma Chapter, Workshop, Bethany, Oklahoma, September 10, 1971).

service to users. This includes the filing of user interest profiles and the matching of these profiles with information related to new developments in that field, and the like. Periodical routing schemes and their control are included in this SDI function in most special libraries.

Special research and development libraries usually have some circulation control, but generally circulation policies are made to facilitate the borrowing of materials by company personnel. Long term loans are made to staff members of particular materials related directly to their immediate research program needs. Records of locations of materials are scrupulously maintained to allow others the access to loaned materials.

Such a library is usually under the budgetary direction of a larger unit of the company. Often the librarian has little or no control over the size of the budget appropriation made for the service, although is held responsible for allocation of the financial resources to the most effective aspects of library operation. Constraints growing from the parent organization objectives are ever present.

Perhaps the most emphasized aspect of special library operation is that of personal service to users. Considering that industrial researchers are highly skilled and

generally highly paid personnel, library staff have the objective to release researchers from details of bibliographic/informational activities to perform their prime function for the organization.

E. Limits of User/Library Interface. Throughout this study the user/library interface was limited to two alternatives for the user: to continue a particular search in the library or to give up that search.

The user's decision to give up the search could be based on several influences. For example, he could have made a preliminary search of his personal library or communicated orally with other scientists in the field and decided that going to the library was unnecessary. Or perhaps, after going to the library, he could have decided that the information he sought was not there either because his search was in error or because he gave up too soon. It was also considered possible that the information was in fact not available in the library and he should have given up his search sooner. These alternatives were considered and put together under the single alternative "give up that search." For this study, the principal interest was to determine the aspects of library operation which would encourage his decision not to give up a search, rather than the attractiveness or availability of other alternatives to using the library or the possibility that there was no place

else to go.

The search continuum included the various loops, retracing of steps, re-checking steps already taken and other details of any search strategy. These steps were considered as a part of that particular use of the library with which a user was concerned, but only as individual decision points within a larger context. For example, while looking for citations to satisfy an information need, it is possible that the user could return to the information desk at some point. Or perhaps an unsuccessful search of indexing media might send him to other sources of bibliographic information related to the library's holdings. All these were considered as included in the one activity "Look for material citations." (See Figs. 1 and 2, pp. 37 and 39).

In the search continuum it is possible that a user might have found a citation in his personal library, in other work or from a colleague in the same field. In this case he would have a strong encouragement to go to the library, but would skip the step in the process where he had to consult bibliographic services to find the citation, and go directly to the material locations. In the study this case was not included because of the limitation to consider only aspects of library operation related to the environment in which the total continuum was pursued by the user.

As Fussler reported (36), a study of materials used by chemists and physicists indicated that about 90% of the materials useful to these scientists came from journals or serial publications. This could mean that a knowledgeable researcher would be more likely to use the indexing services than the card catalog in the library. However, in this study, the actual sources of information sought and used by the library users were not considered. The study was aimed at finding those overall aspects of library operation having the most influence on a user's total behavior during the search continuum. Some would have more or less influence depending on the detailed element of the search with which he was specifically engaged. The study was intended to determine what influence a particular aspect had on his total behavior during the search activity which could make him decide to give up the search. Hence the details of the search strategy were important only as they produced a total effect and the actual sources used were considered only as elements of the search environment.

A further reason for including the total detail in a unit activity was the reduction of complexity of the search system during the user estimation phase of the method. According to psychological studies (such as Streufert's, 122), to present a subject with too much information contributes to environmental complexity and inhibits

human ability in information processing. Details of search strategy would fall into this category.

CHAPTER II

BACKGROUND

A. Literature Review. The literature related to the study of effectiveness of library operations is extensive. Librarians are constantly examining what they do with a view to improvement. The great classification schemes of Melvil Dewey and Ranganathan and the Universal Decimal Classification and Library of Congress Classification systems were developed with this view to improve service, as much as means for handling library materials. Since librarians, by their nature, trained or innate, are sharers of information, the phenomenon of self examination has had an effect on the body of literature dealing with library effectiveness.

For this study, the literature of most value was that which dealt with user studies, statistical analyses, systems analysis, cost-effectiveness, planning and management. Information from outside the body of "library literature" was valuable for its contribution to knowledge of user behavior prediction, decision theory and the application of utility theory.

Unfortunately, little was available within library-oriented sources about these latter aspects. A query of the Defense Documentation Center resulted in the following: "We have

no resumes in the Data Bank pertinent to your request."

The search was performed on the query statement:

> What reports are available on research that has been done in the past five years and what research is being done on the application of Graphical Evaluation and Review Technique (GERT) to analysis of decisions and decision-making?

It used the following terms: "Decision Critical Path Method; Decision making; Decision PERT analog; Decision processing; Decision rules; Decision-making; GERT."

This response indicated that research report literature held little related to decision making in libraries. However, a manual search of the U.S. Government Research and Development Reports did result in several citations which held promise. One in particular, for example, cited a paper from the Naval Research Logistics Quarterly by M. E. Nightengale entitled "The Value Statement" (89). This paper offered a ranking procedure which will be described and demonstrated later.

The study by the John I. Thompson and Co. (127), Phase I, bore out the above response and went even deeper:

> Where evaluations are sought, in which the entity being evaluated is ambiguous or does not lend itself to expression as a precisely defined unit, the literature has not produced any appreciable number of usable concepts. (page 42).

Although the report dealt with materials available through the year 1966, continuance of this search indicated the situation had not improved markedly.

B. User Studies. The definitive study of public library users by Berelson (7) in 1949 was extended by Ennis (30, 31). Neither of these investigations made use of mathematical modeling or future behavior estimation by the users themselves. A recently inaugurated program by Beasley (123) apparently does include subjective analysis by users.

The corresponding study to Berelson's which considered scientists and engineers (special library users) was that of the Auerbach Corporation (8) done in 1965. This study was not applied, however, to planning alterations for improvement in library operation. Rather, it was directed toward discovery of which scientific information sources were actually used. Hence, its chief value to librarians was in its analysis of a user group not necessarily in an interface situation with a special library.

A classic study of scientific information sources was performed by Fussler (36) in the late 1940s. His investigation indicated material useful to physicists and chemists came 90% from journals. Although this study was a definitive investigation of science information users, it was based on citation analysis of published papers in the journals of the disciplines involved rather than on future behavior estimation by the users themselves.

Continuing interest in user needs was expressed in the literature related to library and information center administration. Coover (19) reviewed a number of these studies performed between 1953 and 1966 and related their effects on information center administration. Several articles expressed arguments emphasizing the importance of user consultation in information system development and implementation. Swanson (125) and Pratt (98) articulated these arguments in terms of evaluation and Pratt emphasized subsequent user behavior as a parameter to measure system effectiveness in providing him with his decision making information.

Fussler and Simon (37) concentrated on the use of books in large research libraries. Meyer and Rostvold (76) and North (90) studied the use requirements of industrial and business concerns with information in their communities. Becker and Hayes (5) testify to the value of user studies in development of information storage and retrieval systems, devoting a whole chapter (Chapter 7) in their 1964 text to the subject.

A further testimonial to user-oriented evaluation was found in a recent (September 1971) report by Vincent (131) dealing with analysis of information producing activities. It can be applied to information handling activities:

> Planning for information [handling] yields a set of requirements that are based in a planner's perception of the needs of the intended user . . . these quantified requirements will allow the performance of the implementing activity to be measured and corrected as necessary, thus assuring the user's need is met at the minimum cost." (page 1)

The importance of knowledge about users was also demonstrated in research performed by Baker and Nance (4) and by Nance (85) in their studies of library/user/funder system simulation. Individual user studies such as those of Fearn and Melton (33), Scheffler (111) and Trueswell (130) offered assistance by suggesting specific parameters and examples of such activities. Examples of systems which have been based upon user needs were found in Holst's (51) description of a Scandanivian system, and in the area of management information systems from Sinclair's (117) description of a hypothetical operation.

None of the studies made use of the user's ability to estimate his own future behavior under alternative conditions, an ability which could be useful in advance planning of library operations. Even the most recent report of Vincent (131) developed models based "in the planner's perception of the needs of the intended user. . . ." (page 1, underscoring added.)

Slamecka (118) summed the state-of-art for information system evaluation:

> The present day lack of satisfactory approaches to the measurement of effectiveness and value of information services is a partial consequence of the relative fallacy of past user studies; it is obvious that the assessment of effectiveness of any service is objectively impossible without the knowledge of the specific requirements which such service proffers to meet. (page 567).

C. Statistical Analyses. The importance of statistics to libraries was inferred from publication of such works as Library Statistics: A Handbook of Concepts, Definitions and Terminology by the American Library Association's Statistics Coordinating Committee in 1966 (1). But the use of comparative statistics for operational planning was questioned. Bloomfield's article (10) attempted to show the validity of cost/circulation statistics as a measure of library effectiveness. The complexity of library operations, however, according to Sloane (119) makes the use of comparative statistics for aspects of library service of little value. Anderson (2) suggested that statistics could be compared on an industry or "group-concern" basis to reduce the problem of individual difference between special libraries. (p. 697).

Statistical analyses have been used to develop standards of operation against which a particular library could be judged or toward which the designer of a special library could aim. Such standards can be extremely valuable for literature citation forms, cataloging and classification, thesauri

and elements of information handling particularly for purposes of interlibrary cooperation as Orne has argued (93). Salverson emphasized this (110), as did Anderson (2).

The establishment of standards for service aspects has proved difficult if not impossible because of the array of specific objectives related to the specialized subjects and clientele referred to above, in Chapter I, page 4. Statistical analyses have contributed, however, to establishment of methodologies for individual library evaluations. Stevenson (121) provided a checklist and the Special Libraries Association study of library objectives and development of profiles (68, 69) afforded models for the use of statistics on an individual library basis. Pizer and Alexander (96) offered this approach as a basis for an objective testing of elements of library operations.

The real value of statistics in special libraries can be seen in the application to various models for particular aspects of operation. Morse (82) has made valuable contributions to the state-of-the-art as has Leimkuhler (66) and their associated researchers. Their use of statistics takes the form of input for mathematical models of particular library operations, and the two citations above are overviews of these applications. However, even this work did not use a future behavior approach to statistical data gathering.

It could be argued that librarians are not statisticians, but literature is readily available to help them in an understanding of this tool. Library literature had an abundant supply of examples where statistics were applied to individual situations to determine use characteristics for operations. But in almost every case the information was based upon historical data, that is, past usage, and made no effort to forecasting, although there were suggestions of this application such as Dillehay's (22), Kramer's (62), and Lazorick's (65). Even in such suggestions there was an apparent reticence toward asking users to estimate their own probable future behavior under alternative conditions.

D. Systems Analysis. Most writing in library literature about the possible use of systems analysis was hortatory in tone. Librarians were urged to make use of this tool, but little was offered to help them do it. Although a relatively new discipline, systems analysis as a management tool has been recognized as valuable for librarians (94, 97, 115, 129) and much needed. Lamkin (64), Moore (79) and Simms (115) provided strong arguments and solid reasons for the systems approach.

Techniques of systems analysis as applied to libraries were described in several excellent publications. Robinson (108), Hayes (46), Herner (50), Morse (82), and Raphael (106) all provided general overviews of the values and

methodologies of systems analysis within libraries. Examples of techniques and applications were given by Bolles (11), Burkhalter (13), Chamis (14), Chapman (15), Dougherty and Heinritz (24), Fazar (32), Gull (43), Jestes (54), Kozumplik (61), Libaw (70), Meise (75), a Johns Hopkins University study (92), and Raffel and Shishko (103). Applications, however, dealt mainly with academic libraries and did not particularly take into account special library type uses of these research libraries. Other assistance for librarians in using systems analysis was found in the literature of other fields such as management science, industrial engineering, and the closely allied field of computers and automation.

The techniques of systems analysis in determination of library operations have particular value when considering planning of possible alternatives. Until a system is understood in all its elementary detail, change cannot be properly effected to improve that system. It is in this aspect where systems analysis can make its greatest contribution to library management.

Cost-effectiveness and cost-benefit analysis as elements of systems analysis and operations research have received attention from those who would help librarians in their attempts to improve operations. The writing on the subject could be divided into two groups: that which dealt with

information systems and that which dealt with libraries. Within the first group general information and examples were provided by Cohen (18), Day (21), Freeman (35), Hall (44), Heaps and Thiel (49), Keith (56), Kent (57), King and Lancaster (58), Korfhage and DeLutis (60), Lister (72), Lutz (74), Norton (91) and Wills and Christopher (134). In the second group, dealing with libraries, were Newhouse (87), Randall (105), Wessel (127, 132) and Williams (133).

Some of the problems associated with this aspect of analysis seemed to stem from the difficulty of assigning dollar value to information. The citations above would afford much help in determining costs of specific aspects of library operations. The determination of a dollar value for information provided by a system to its users has been a deterrant to the application of cost figures in a cost-benefit analysis. In a classic article on the subject, Prest and Turvey (99) suggested other avenues of approach to value determination in operations of more intangible or less dollar-measurable benefit to society. Definition of such values in terms of effectiveness offered promise for library evaluation. Operational Research Quarterly, Special Conference Issue (20) identified a difference between cost-benefit and cost-effectiveness in terms of using dollar value for the former and other measures for the latter (p. 37). Fields (34) had suggested this at an

earlier date.

None of the literature suggested the use of user estimates as measures for effectiveness of particular aspects of library operations. This technique, being studied in the fields of psychology and decision theory, held great promise in overcoming the problems associated with application of cost-effectiveness to library systems. It afforded the opportunity to make the most valuable use of the techniques of systems analysis in planning and management of library operations, particularly within the special library context. It made it possible to treat the criticism that too many user studies included library operator bias. It provided a means for gathering information directly from the users themselves and avoiding much of the bias generating this criticism.

E. A Suggested Approach.

1. The User as Decision Maker. Much has been written about the manager as a decision maker. In the context of the special library, this is particularly important since the library manager is a part of the staff of a larger, parent organization in most cases. But in the context of the special library it is equally important to consider that the user is a decision maker. When considering the effectiveness of library operations it becomes particularly important to consider the decision processes whereby the user makes up

his mind to come to the library, perform his information search, and complete his finding task. The library is not as effective as it might be if the user decides to give up on a particular search of the library resources because some aspect of library operation affects him adversely.

Admittedly, the user's decisions are based in most instances on qualitative rather than quantitative data. His decision is largely subjective rather than objective. Greiner, Leitch and Barnes (41) made this point (p. 59) about managers as decision makers and implied that much of the effort in management information system design was superfluous. But the fact remains, whether based on qualitative information, on emotions, psychological sets of the mind, bigotry, or serendipity, decisions are made by library users which can indicate effectiveness of library operations. Decision theory offered possibilities to understand and analyze these decisions.

An approach to determination of effectiveness utilizing an application of decision theory to user behavior needed to identify the steps in the user/library interface. At each step in the process of using the library there is a corresponding decision tree for each user. Quantitative decomposition of this tree is possible with established procedures as described by Schlaifer (112, pp. 30-69) and Raiffa and Schlaifer (104, Part I). But more information

would be needed by the investigator before such a decision tree could be constructed.

Preliminary information had to include what the steps were and the various aspects of library operation involved in each of them, from the user's viewpoint. Exactly what the elements of a library or information system might be was a source of confusion (See, for example, R. V. Head - 47, 48). But from the standpoint of user objective, the primary aspects appeared to be materials and their access.

Jestes (54) identified three essential steps related to these aspects of library operations as he considered the user interface: Enter the library, search for material citations, find material locations (p. 724). In the suggested approach, this would mean that at each of these three steps each user would make a decision either to continue a particular use the library or to give up that search. This decision would be influenced by information input related to his past and/or present experience. That is, the decision is made under certain conditions which can be considered the state of the environment in which the user finds himself; a state controllable to some degree by library management.

The model suggested by Jestes was concerned with user activities related directly to the library. It did not take

into consideration the alternatives to library use. For example, the researcher might not have any second or alternative choices to the use of the library, in which case there would be a strong encouragement for him to make use of the library available to him, in spite of adverse conditions of library operation. On the other hand he might have other choices available for performance of his information searching. Oral communications with others active in the same area of research, special search services such as the Science Information Exchange, Defense Documentation Center, and the like might satisfy his information needs without reference to the library available to him locally. The model does not consider the case where the information needed is in fact unavailable in the local library in which case the user ought to give up, nor does it include the situation where the researcher performs an imperfect search and gives up too soon.

Considering the limitations for this study (page 7), the model suggested by Jestes had a high potential for showing the search continuum and user behavior during a particular use of the library. Minor modification of the Jestes model made it possible to include the concept of user decisions during a particular interface with the library. (See Figures 1 and 2, pages 37 and 39.)

2. Decision Trees. Decision making is a complex process. The weighing of alternatives with their possible outcomes to decide which alternative action to take in a particular situation can engage the decision maker in a myriad of paths and branches. Modern decision theory provided a way to model the activity and decompose the problem into component parts related to each other in a single diagram. The decision tree (or network) can show the various alternatives and their influence on each other as information is gathered about the state of the environment which affects possible outcomes.

Robert Schlaifer (112) and the same author with Howard Raiffa (104) have provided definitive texts about decision theory and the use of decision networks when the environment includes uncertainty. Their methodology offered distinct advantages for a study of library user decision processes.

The library user makes his decision to continue his use of the library or to give it up on the basis of information which impinges upon him from the library. In the process of making this decision he could face the uncertainty of finding the needed information which prompted the use of the library. Various aspects of library operation might influence this decision making function by increasing or decreasing uncertainty, and the influence would be the

information input to the decision network which modeled the process.

As these aspects change, alternatives will be presented to him which complicate the process and necessitate some means of decomposition to facilitate understanding of the effects of the influences. Particularly when considering the interface with the library from the library manager's point of view, the influence of alternatives in the various influential aspects would help in the planning of library operations in the future. Here again an element of uncertainty could enter which the decision network model might help to dispell.

A further advantage of network modelling was the requirement of systems analysis to include the individual detailed alternatives leading to particular outcomes. The necessity for detailed understanding of all elements of a particular decision could force the modeller to consider each possible step in the process and not overlook any possible outcome. It would provide him, too, with a means of quantifying the probabilities associated with each path of the network and aggregating them into final outcomes for every strategy in the network. Where paths are dependent upon each other the network diagram will indicate the interrelationships and dependencies. It also would allow for these interrelationships and dependencies to be associated and produce their

effects objectively upon the outcomes.

3. Graphical Evaluation and Review Technique (GERT). The Graphical Evaluation and Review Technique (GERT) was developed by A. A. B. Pritsker (100) to provide a solution to stochastic network problems. GERT is a tool which allows solution of a probabilistic network of activities where several alternatives are possible, all of which will not be realized. The relationship of GERT to decision networks has been developed by Knight (59).

Critical Path Method (CPM) and Program Evaluation and Review Techniques (PERT) have been used for scheduling and planning of operational programs. The logical networks of these techniques provide clear, generally chronological models of detailed steps in the operations being considered. Using deterministic nodes (points at which subsidiary parts or activities center) to designate the beginning and ending points of specific activities shown by directed paths, PERT and CPM can provide the planner with logical estimates of completion times, costs, and the like. They also indicate those activities which are critical to the completion of a program or project. They have proved to be valuable tools in project planning and management.

These forms of network analysis are additive in their

aggregation procedures; that is, time and cost of activities are summed through the networks to give the total time or cost on the critical paths. The difference between these paths and the other paths through the networks is considered as the "slack" in the other paths, a value useful in scheduling starting times for subsequent, associated activities. A problem arises when some of the parameters on which completion of activities and the realization of ending nodes depend are probabilistic in nature, that is, when these parameters are in the form of probabilities. In such cases probabilities are multiplicative, a functional relationship which PERT and CPM are unable to accommodate.

Pritsker turned to the theory of signal flow graphs and particularly to the work of Elmaghraby and others to develop GERT. Applying the signal flow graph algorithms and concepts to the logical network concepts of PERT and CPM, GERT was developed to handle networks with probabilistic characteristics, i.e., where there was a probability associated with the branches (paths) of a network being actually realized, and where, in such instances, a probability was associated with the elapsed time for the activity represented by the branch (path). GERT allowed for these probabilities to be multiplied to determine the realization parameters for the final node and others within the network. It also accommodated differing branch

probability distributions.

Considering the user/library interface, each decision point is the process of using the library had a probability associated with it for each user based upon his preference for some aspect of library operation. For the population of users there would be a distribution of preferences for particular alternatives open to the library manager for specific aspects of operation. These alternatives had associated with them probabilities for their being put into effect. Therefore, if a model were developed showing the user decision points, the paths leading from those decision points would represent all alternatives for all aspects of library operation affecting the decisions. The probability for realization of a path would be the probability that that alternative would be effected or instituted. The distribution of user preferences for that alternative would indicate the effectiveness of that alternative. A particular path through the network would be a strategy open to the library manager which would affect the user in completing his particular library use.

Prior to solving the user decision network problem with the GERT technique, other operations research techniques were investigated. However, it became evident that these techniques were not appropriate to this problem because

of the probabilistic nature of the problem and the actual quantities which must be carried through the network. Consequently, the GERT solution proved most suitable. Optimization techniques did not provide the solutions which would help in the decision process since maximum values for effectiveness and for probability of realization were sought, and the relationship between the two was not determined.

To solve this network problem, then, and find those paths (strategies) which have the highest effectiveness (preference) potential and the best probability to be instituted, a computer program was available to solve a GERT network in which the inputs were these two characteristics (Appendix III,4,d, page 215).

This program produced as output the appropriate problem identification headings, paths of the network, probability of realizing any node from any starting point, and the mean and variance for realization. Appendix III,4,d, page 215 shows the input for the program.

The computer program for GERT offered an opportunity to have a display of the various strategies for library alteration. This display showed the effectiveness in terms

of user preference plus library-administration-generated probabilities for realization of those strategies.

4. Probabilistic Information Processing. As input to the GERT network analysis it was necessary to determine the influence of the various alternatives possible in each of the aspects of library operation being considered. At the same time it was desirable to utilize data provided by users in this procedure. There was no literature available which described a way to satisfy these two requirements, particularly in the field of library planning.

Experiments by psychologists in the field of decision theory offered potential for overcoming this lack. (25, 26, 28, 39, 52, 95, 113, 120, 122). These decision theory experiments were based upon the information processing abilities of human beings, which suggested that users actually could provide the data needed.

As suggested earlier, the user's decision to continue through the library search processes or not is made on the basis of information gained from his experience with the library. The decision is generally not a black and white one but has some probabilistic elements associated with its branches. These probabilities could be the measure of the effects or influences of the suggested alternatives. The array of these probabilities over the population of

users provided the input to the GERT network in the form of distributions of effectiveness measures for particular alternatives.

The particular experimentation in the field of psychology referred to above dealt with information processing. Any decision involves processing of information which affects choices between alternatives. The decision maker himself evaluates this input and adjusts the probabilities attached to the [illegible]ses accordingly. (60, 104).

It [illegible]ed that humans can estimate pr[illegible]ite well. (25, page 66). However [illegible]ndicated that relative estimation wou[illegible]ct magnitude estimation. Therefore, [illegible] user was asked to estimate the probabilities for his continuance in some other form than by direct probability estimation.

As pointed out earlier, Susan Streufert (22) studied the problems associated with environmental complexity, including information load (the amount of information coming per unit of time). The greatest problem which this offered to the method was that it could increase possible error generated by conservatism. Streufert's work suggested that complexity could make users underestimate more than normal. But her

users provided the input to the GERT network in the form of distributions of effectiveness measures for particular alternatives.

The particular experimentation in the field of psychology referred to above dealt with information processing. Any decision involves processing of information which affects choices between alternatives. The decision maker himself evaluates this input and adjusts the probabilities attached to the initial hypotheses accordingly. (60, 104).

It has been well established that humans can estimate probabilities and do it quite well. (25, page 66). However, some studies (120) indicated that relative estimation would be better than direct magnitude estimation. Therefore, in this study the user was asked to estimate the probabilities for his continuance in some other form than by direct probability estimation.

As pointed out earlier, Susan Streufert (22) studied the problems associated with environmental complexity, including information load (the amount of information coming per unit of time). The greatest problem which this offered to the method was that it could increase possible error generated by conservatism. Streufert's work suggested that complexity could make users underestimate more than normal. But her

recent studies,* however, indicated that effects of this phenomenon on a methodology such as the one proposed here would be minimal.

Many studies have been devoted to the use of Bayes Theorem (80) as a tool for reducing a decision network and eliminating the necessity of a complex network diagram. Notably the work at Ohio State University (Schum, Howell, Goldstein, Gettys, et al - 52, 113) and at the University of Michigan (Edwards, Phillips, et al - 28, 95) provided Bayesian models for network reduction as odds estimates for alternative hypotheses have been revised. These models also provided for input of additional information on which probability or odds estimates can be revised. Such models designated as PIP (Probabilistic Information Processing) and Semi-PIP held promise for decision analysis where there was either conditional independence (PIP) or where dependent data elements could be collected into independent groups (Semi-PIP).

In the case of the library user it is quite possible that the issue of dependence or independence cannot be resolved. The work of Gettys and Steiger (39), which used what they term "Quasi-PIP," allowed for direct probability estimation

---

*According to Dr. Charles Gettys, in a personal interview, September 20, 1971.

where there is a dependence relationship between data elements. Indications from recent investigations by Streufert* implied that the dependence or independence of diagnostic parameters would be of little significance to human processing of information. She found insignificant difference between human estimates using dependent diagnostics and Bayesian reductions assuming independence in her experiments.

Another assistance for the method was found in the field of experimental psychology. L. L. Thurstone (128) developed his Law of Comparative Judgment in 1927 (described in Chapter 3 of the reference). This concept was extended by Nightengale (89) using a development described by Guilford (42, Chapters 2 and 3). The value of this development was utilized in the present method to analyze the user's ranking of significantly influential aspects of library operation.

By using the various results of the above studies, it was possible to generate inputs for the nodes of the GERT network and at the same time avoid many of the biases of the library manager and the library user in the evaluation of library operations. And it was possible to avoid many of the problems associated with the intangibles which make quantification so difficult in studies of library effectiveness.

---

*Ibid.

CHAPTER III

A METHOD TO DETERMINE EFFECTIVENESS OF LIBRARY OPERATIONS

A. Introduction.

The example of application in Chapter IV using the Physics Department Library at the University of Oklahoma demonstrates that the method will help to find those aspects of library operation which are most influential on the decisions of users to use the library, continue a particular use of the library and successfully complete that use. Within each of these influential aspects, the most effective alternatives can be determined. From this determination a library administrator could make a decision about which strategy to apply, from several available to him, to improve the effectiveness of his library operation.

No single method will solve all problems. The method developed here and applied as in Chapter IV can provide a means to evaluate alternatives in library operations. No two applications will be identical. Direct relationship to reality in every situation is tenuous at best. Modifications of the method can accommodate individual local circumstances. Some of these have been anticipated in Chapter V and suggestions for changes in the method are made.

B. The Method Design.

1. State the Objectives. In any systems study it is necessary to define objectives, both philosophical and operational. Following this it is necessary to limit the scope and define constraints on the study.

In the development, the objective for the method was determination of an effectiveness measure for various alternative strategies for changing library operations. A further aim was the combination of user opinion with the attitudes of the library administrators in a "concert" effort.

An inherent constraint on the method, then, was that it was limited to users of the library, giving no attention to occasional users or to non-users. A further limitation was applied in that specific aspects of library operation were to be considered by the method rather than all facets of service, or other alternatives to using the library.

2. Select Aspects for Study. Identifying specifically those aspects to be included in the study, it was necessary to postulate what user behavior might be.

The flow chart shown in Figure 1 approximates the gross activity of using the library (52, p. 724). At each of the boxes shown, some elements of the library influence the decision of the user to continue his use of the library or

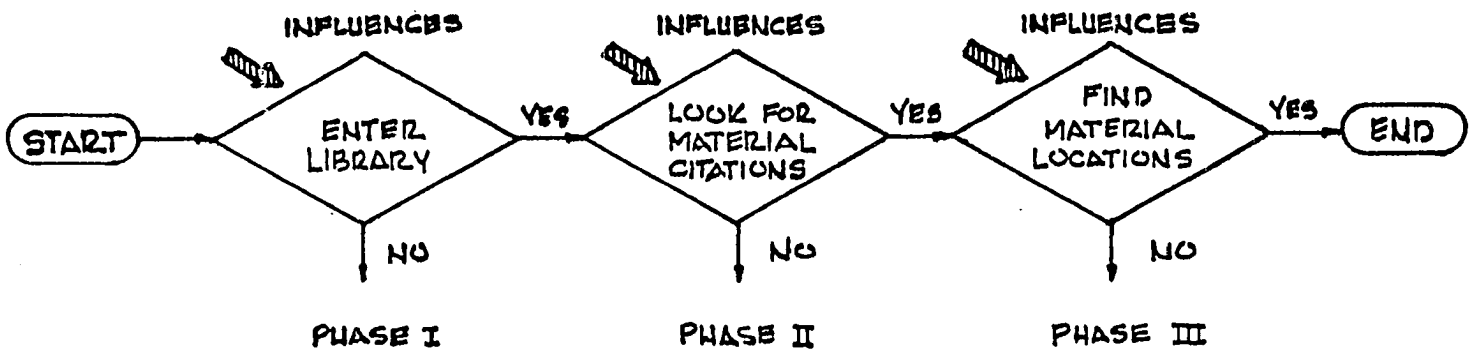

FIGURE 1: Flow Chart of User/Library Interface

to give up that search. In the context of limitations on this user/library interface, activities associated with each of the boxes shown included all possible alternatives being exhausted before giving up that search. A more detailed model of this total process is shown in Figure 2 (54, p. 725).

This general model (Figure 1) was developed to show three phases of an individual use of the library. The decision made by the user in Phase I is to go to the library or not. In Phase II his decision is to continue searching for material citations related to his particular information need or to give up. Decision in Phase III is made on whether to actually find the materials, citations for which have been found in Phase II. In each of the latter two phases it is assumed that the decision to continue has been made in the previous phase.

In each phase various elements of the library operation influence the user in making his decision. For example, in Phase I if the library is located in an inconvenient place, the user could decide not to go there. In Phase II the user's decision could be affected by the attitude of the staff or by the way the library is arranged or some other aspects of operation. In Phase III the user could base his decision to continue the search on the collection itself as he experiences it either in this

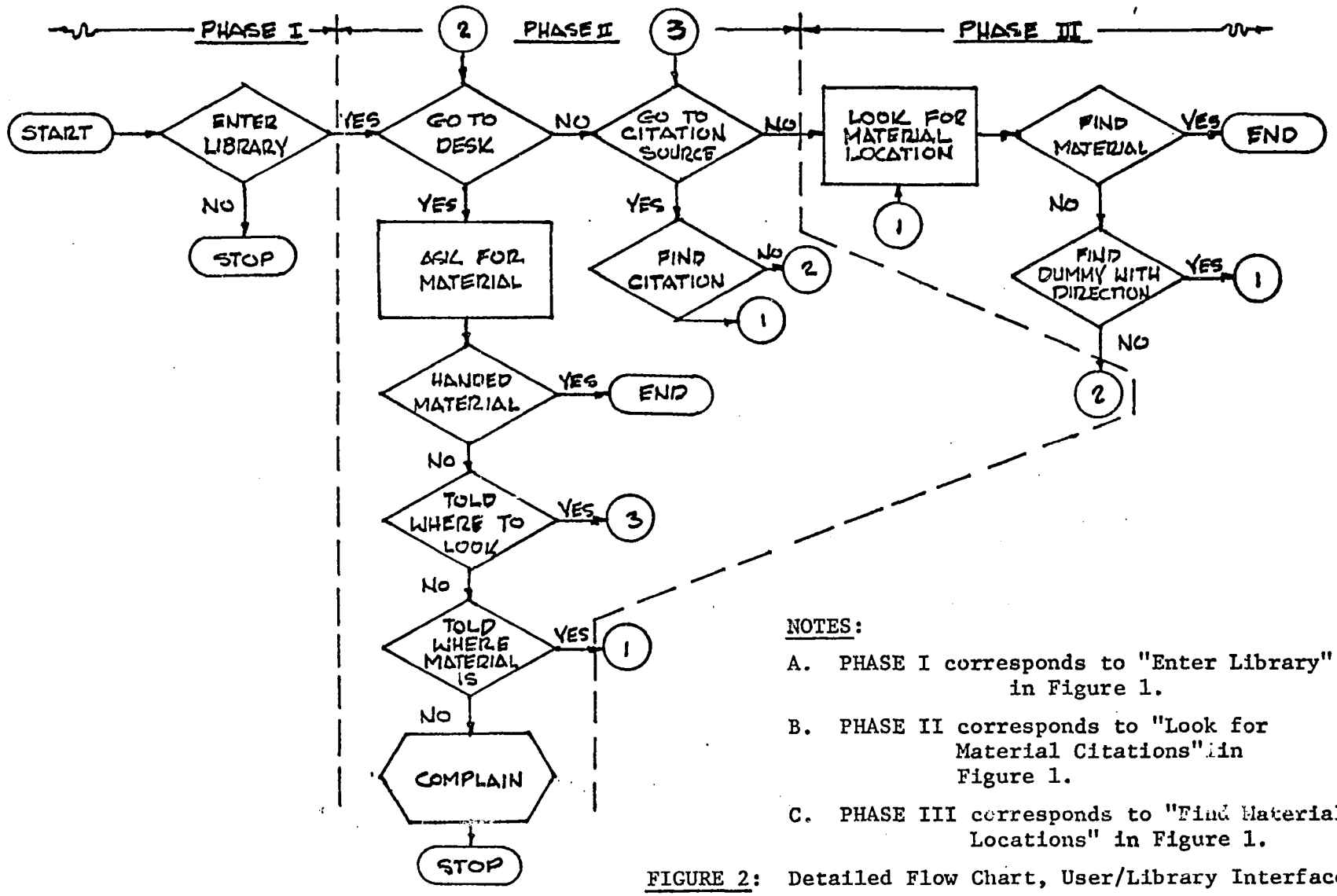

NOTES:

A. PHASE I corresponds to "Enter Library" in Figure 1.

B. PHASE II corresponds to "Look for Material Citations" in Figure 1.

C. PHASE III corresponds to "Find Material Locations" in Figure 1.

FIGURE 2: Detailed Flow Chart, User/Library Interface

search or in previous searches he has performed. The same influences might well be important in all three phases for particular users, or it might be that different users are influenced in varying degrees by different aspects. These possibilities were considered when making the initial selection of aspects of operation for the study.

Criteria for selection included feasibility for change as well as the potential influence each aspect could have upon user decision processes. Considering feasibility, for example, it could be infeasible to double the size of the library facility, but feasible to increase the size of the collection within the confines of space available. A change in hours of service could be feasible but have little affect on the users, whereas the currency or age of the materials in the collection could feasibly be changed and influence the users greatly.

3. Select sample of users for the study. Since one of the chief objectives of the investigation was to include user opinion, the selection of library users to be part of the process was an important step. The size of the sample depended on the number of people who actually used the library, and on the particular, individual objectives for the study.

Since a later element in the study performed a goodness-of-fit test to determine the actual probability distribution from which the sample was chosen, the size of the sample was not considered to be as important at this stage in the method, as long as it was generally representative of the user group. However, a random selection of a large group should insure this representation. In the case of a small group the selection might include most of the total population, or perhaps the total population of library users.

Criteria for selection were as follows:

a. To be selected the person must be:

i. A user of the library, and

ii. Willing to cooperate in the study.

b. Since the method required the expenditure of time, consideration was given to the amount of time required for personal interviews, both for the users and the investigator, particularly relative to sample size.

c. While the subject area used for development of the method was only Physics, the areas included in the library collection could have been numerous. In this case, either a restricted subject area could have been chosen and the sample drawn from the users with specific interest in this subject area, or a random sample of users for each subject area could have been selected.

In other libraries randomization could be based on employee numbers; or in a public library situation where borrowers are registered, the registry could be used. If a total community were included in the investigation, randomization could be based on street addresses of library users.

4. Design of the first questionnaire. The purpose of this questionnaire was to obtain a measure of the relative significance of the various aspects of library operation in the opinion of the users. The aspects of operation selected for consideration could have differing significance on individual users in the three phases of the user/library interface. This questionnaire aimed to provide a means to determine what influence, if any, each aspect might have upon a user at each decision point in the gross model flow chart of Figure 1.

The various aspects of library operation were grouped under larger headings, such as physical facilities, collection, services, staff, and the like. This identified larger areas for the person completing the questionnaire. A further aid to respondents' understanding was included by defining each aspect during the questionnaire administration.

5. Administration of the First Questionnaire. The questionnaire was administered by interview. It was

necessary to contact each user in the selected sample to arrange a time for the interview, since the pressure of time upon the user could inflict the study with an undue bias if the questionnaire were administered inopportunely. It was also necessary to provide enough time to insure complete understanding of each aspect and what was expected of the respondent in applying a value to the significance of the influence of each.

The user was asked to study the complete list of aspects and to add others not found there which he considered influential in his decision-making during any particular interface experience. Having been satisfied that the list was complete enough, he was then asked to choose the aspect(s) having the least influence on his use of the library, considering Phase I. The value given to this aspect was 0. He was then asked to rate the rest of the list upon this base to a highest value of 100. He could study the values given for Phase I influences to be sure they reflected as closely as possible his own significance measures. (See Figure 1.)

When the relative values for Phase I were established, he was asked to move to Phase II. Having decided to seek satisfaction for his information need in the library, he was to consider himself in the library performing a literature search for citations to materials to satisfy

his information need. Once again the least significant aspect was given a value of 0 and the process of ranking, as performed for Phase I, repeated. The same procedure was followed for Phase III. For each phase the user was given the opportunity to compare values for various alternatives with each other and with those already assigned in the earlier phase or phases.

6. Data Reduction. The data gathered by administering the questionnaire was tabulated in a matrix for each Phase showing the list of users (rows) and the list of aspects of operation considered (columns). Since they were all gathered on the same scale of 0 to 100, the values were ranked for each user's response to all aspects. To reduce the values to single columns of relative significance coefficients for the list of aspects in each phase, the method for comparative judgment developed by Thurstone (128) and amplified by Guilford (42) and Nightengale (89) was used for the development as follows.

The matrix below was used as a form for data tabulation. In the matrix the judges are the library users in the sample and the parameters are the aspects of library operation being considered. Before tabulating data in this form, each returned questionnaire was studied and the rank value determined for each aspect in the list from 1 for the first rank to n for the nth. If more than one aspect had

the same value applied by a user, the same rank was given to each; but the next value was then ranked with a number equal to the former plus the number of aspects having that value. For example, if three aspects had the value of 100 each was ranked as 1. The next highest aspect with a value of, say 95, was then ranked as 1+3 or 4. These rank values were entered as X_{ij} in the matrix, where i represented the user (judge) and j the aspects of library operation (parameter).

JUDGES PARAMETERS

	1	2	3	4	.....	n
1	X_{11}	X_{12}	X_{13}	X_{14}	.....	X_{1n}
2	X_{21}	X_{22}	X_{23}	X_{24}		X_{2n}
3	X_{31}	X_{32}	X_{33}			
4	X_{41}	X_{42}				
. . . .	. . . .					
m	X_{m1}					X_{mn}

Matrix A, below, is constructed from the data tabulation, above, by setting a_{ij}=Number of times parameter i was judged more significant (had a lower value for X) than parameter j. That is, for each parameter, the values in the column were compared with the values in each other column and the times the X value was lower than another was

totalled for entry as a_{ij}. This computation was done with the computer program included in Appendix II, Program 1, page 151.

Matrix A: Number of Times Parameter i Judged More Significant than Parameter j.

Parameter i	Parameter j						
	1	2	3	4	5...	j...	n
1	0	a_{12}	a_{13}	a_{14}	a_{15}	a_{1j}	a_{1n}
2	a_{21}	0	a_{23}	a_{24}	a_{25}	a_{2j}	a_{2n}
3	a_{31}	a_{32}	0	a_{34}	a_{35}	a_{3j}	a_{3n}
. . .							
i	a_{i1}	a_{i2}	a_{i3}	a_{i4}	a_{i5}	a_{ij}	a_{in}
. . .							
n	a_{n1}	a_{n2}	a_{n3}	a_{n4}	a_{n5}	a_{nj}	0

a_{ij} = number of times parameter i is judged to be more significant than parameter j, $i \neq j$. (Parameter is not judged against itself.)

Matrix P is constructed from Matrix A to show the percentile of times one parameter is judged more significant than another. Elements $p_{ij} = a_{ij}/c$, where c is the number of judges (users), $p_{ij} + p_{ji} = 1$, and $P_{ij} = 0$ for $i = j$. The following is the corresponding matrix P for the above Matrix A:

Parameter i	Parameter j							Row Totals
	1	2	3	4	5...	j...	n	
1	0	p_{12}	p_{13}	p_{14}	p_{15}	p_{1j}	p_{1n}	p_1
2	p_{21}	0	p_{23}	p_{24}	p_{25}	p_{2j}	p_{2n}	p_2
3	p_{31}	p_{32}	0	p_{32}	p_{35}	p_{3j}	p_{3n}	p_3
. . .								
i	p_{i1}	p_{i2}	p_{i3}	p_{i4}	p_{i5}	p_{ij}	p_{in}	p_i
. . .								
n	p_{n1}	p_{n2}	p_{n3}	p_{n4}	p_{n5}	p_{nj}	0	p_n

The final matrix in the process was Matrix Z which converted Matrix P into standard measurements of separation in terms of equal standard deviations of the discriminal dispersion scale (42, p. 27). It was constructed by making the p to z transform using a table or mathematical approximation and an algorithm as used in the computer program in Appendix II, page 151.

Two extra columns were added to this matrix to show totals and means for each row. Elements z_{ij} = separation between parameter i and parameter j in terms of standard deviations, $i \neq j$. The element z_{ij} is positive for $p_{ij}>0.50$ and negative for $p_{ij}<0.50$; $z_{ij} = 0$ for $i = j$; $z_{ij} = -z_{ji}$. The following is the corresponding Matrix Z for the above

Matrix P:

Parameter i	Parameter j							Total	Mean
	1	2	3	4	5...	j...	n		
1	0	z_{12}	z_{13}	z_{14}	z_{15}	z_{1j}	z_{1n}	Z_1	$\overline{Z}_1$
2	z_{21}	0	z_{23}	z_{24}	z_{25}	z_{2j}	z_{2n}	Z_2	$\overline{Z}_2$
3	z_{31}	z_{32}	0	z_{34}	z_{35}	z_{3j}	z_{3n}	Z_3	$\overline{Z}_3$
. . .									
i	z_{i1}	z_{i2}	z_{i3}	z_{i4}	z_{i5}	z_{ij}	z_{in}	Z_i	$\overline{Z}_i$
. . .									
n	z_{n1}	z_{n2}	z_{n3}	z_{n4}	z_{n5}	z_{nj}	0	Z_n	$\overline{Z}_n$

The final calculation from Matrix Z determined the relative significance of the parameters in the study.

Parameter	$\bar{Z}$	$G(\bar{Z})$	Normalized Relative Significance
1	$\bar{Z}_1$	$G(\bar{Z}_1)$	
2	$\bar{Z}_2$	$G(\bar{Z}_2)$	$\frac{G(\bar{Z}_i)}{\sum_{i=1}^{n} G(\bar{Z}_i)}$
3	$\bar{Z}_3$	$G(\bar{Z}_3)$	
. . .			
i	$\bar{Z}_i$	$G(\bar{Z}_i)$	
n	$\bar{Z}_n$	$G(\bar{Z}_n)$	

$$\sum_{i=1}^{n} G(\bar{Z}_i) =$$

Nightengale suggested a test for consistency among the judges (users) (89). From the values of $(\bar{Z}_i - \bar{Z}_j)$ for all i and j a value of p_{ij} was computed for each combination. Subtracting the corresponding p_{ij} of Matrix P from these values, a deviation was computed to show the difference between the percentage or the time that parameter i theoretically should have been judged more significant than parameter j and the percentage of judges (users) who estimated i to be more significant than j. The largest discrepancy, according to Nightengale, should be less than three average deviations for a judgment of reliable consistency, i.e., Max $\Delta_{ij} < \frac{3\Sigma|\Delta_{ij}|}{N}$, where Δ_{ij} is the

deviation between theoretical and estimated superior significance; and N is the total number of combinations of i and j, $i \neq j$. Computer program 1 of Appendix II, page 151, includes this feature.

This procedure was followed for each of the three decision points (phases) in the flow chart of Figure 1. For each of these points the method indicated which were the most important aspects of library operation influencing the user to continue his use of the library or to give up and go elsewhere.

The normalized relative significance values were ranked, cumulated and normalized, using a computer program (Appendix II, page 155). When normalized and the corresponding parameters identified, a satisficing (sufficient satisfaction, 85) level was selected to indicate those aspects of library operation which on the basis of significance to users would be most influential. This, too, was done for each phase independently.

Satisficing level meant that percentage of the cumulation below which parameters could be ignored for the balance of the study. For example, taking the upper 75% (a cutoff at .25 in the cumulation series), implies that the lower 25%, those parameters falling below this level, could be ignored. This suggests that the judges are affected 75% of the time by attention to the parameters included.

Since the study was based on user opinion and aimed at user satisfaction, a majority of the users being satisfied could be acceptable as a satisficing level. By taking a much higher percentage, the majority effect was assured. If the level for these parameters was, say, 1%, 5%, 90% and 95% respectively, it could be said that only 1% and 5% of the time the former two parameters would be significant to users of the library and that 90% and 95% of the time the latter two would be influential.

7. Select Alternatives for Change. It should be noted that by this point in the method, although the most influential aspects were determined, the kind of influence was not established. The ranking of the various aspects so far was based only on whether or not they were influential. It was necessary to discover whether that influence was positive or negative, that is, whether a particular change would produce a decision on the part of a user to continue use of the library (positive) or to give up and go elsewhere (negative).

Representative of each aspect of library operation determined as influential in the previous step of the method were the various alternatives or strategies considered as potentials for change. Selection of these alternatives would depend in large degree upon their feasibility. For the purposes of this step, feasibility was defined as the

probability that the alternatives suggested would actually be instituted. If there was no probability for effecting a particular alternative, it should not be included. Each application of the method would have to define feasibility for alternative strategies in the light of its particular situation. In selecting alternatives, experience from the interviews also proved invaluable.

The advantages and disadvantages for both the user and the library staff and administration were considered when making the selection of the alternatives for each influential aspect of operation. This element of the method necessitated intimate involvement of library administrators and provided an opportunity for their input to the evaluation.

The alternatives used for final solution of the user decision network were included with the probability that each could be instituted as a change in library operations. It was necessary for this probability to be determined by the investigator with the administrators of the library itself and those responsible for its funding. Essentially this probability was a measure of feasibility for the various alternatives.

As an example, if currency of materials and the availability of the collection are two influential aspects of

library operation, perhaps it would be feasible to increase the materials budget to provide for more newer materials by adding journals not currently received. An alternative related to availability of materials could be the issuance of keys to regular users so that they could use the library at any time convenient to them. Other alternatives could be: reducing book purchases to increase journal purchases; routing of journals to users; freer circulation policies; and so forth. These would each have different feasibility values and different advantages and disadvantages which could be identified.

8. Determine Effectiveness for Alternatives. When the alternatives had been chosen, it was necessary to design a questionnaire to enable the users to provide a quantified value for the effect of each on his decision to continue a particular use of the library or to give up that search. This was presented to him in a ballot type of questionnaire on which to record his opinion of a prospective change in library operation described by the particular alternative. He was asked to "vote" both "yes" and "no" by signifying the percentage "yes" and percentage "no" (summing to 100 for each alternative). This was done with each alternative for the phase or phases in which it had been established as influential. (Some alternatives were influential in all phases. Others were influential in only

one, or perhaps two.)

The form of the questionnaire did not give any indication of the actual influence established in the earlier steps of the method. As in the case of the first questionnaire, the list was grouped into larger categories for easier interpretation and understanding by the users. This questionnaire was administered without an interview. A sample questionnaire is shown in Appendix I, Exhibit 5, pages 141-144, together with the instructions and statements accompanying it to the users.

9. Establish Probabilities for Alternative Realization. As suggested above, there was a probability associated with each alternative to indicate what chance that alternative had of being effected. These probabilities were established before final analysis of data obtained from the second questionnaire was performed. This step in the method afforded an important opportunity for input from library management. The method sought to provide for a "concert" evaluation of library operations utilizing input from both the users and the library managers.

It was felt best not to attempt too close or detailed procedures for establishing the required probabilities. The reports from experimental psychologists active in the study of probabilistic information processing and its

associated element of odds or probability estimation suggested that this be done quickly. (See Chapter II, pages 31-34, for references.)

10. Data Reduction. The information gathered through the second questionnaire was tabulated in matrix form (see Appendix I, Exhibits 2-4, pages 138-140). A mean value of "yes" and "no" values for each grouping of alternatives for each user was helpful, particularly since the number of alternatives being considered was large and there were several groupings. This will become clearer as the network development progresses.

As the data were being collected, it was possible to construct a decision network for the "average" user making use of the alternatives being considered. Figure 3 illustrates a decision tree for a user for one phase of his interface with the library. In this illustration, only "yes" values are shown. Construction of such a decision tree facilitated the form for tabulating the results. In the figure, five alternatives are considered for the illustrated phase. Figure 4 illustrates the tree if five alternatives are considered for each of three phases throughout the total process of an individual use of the library.

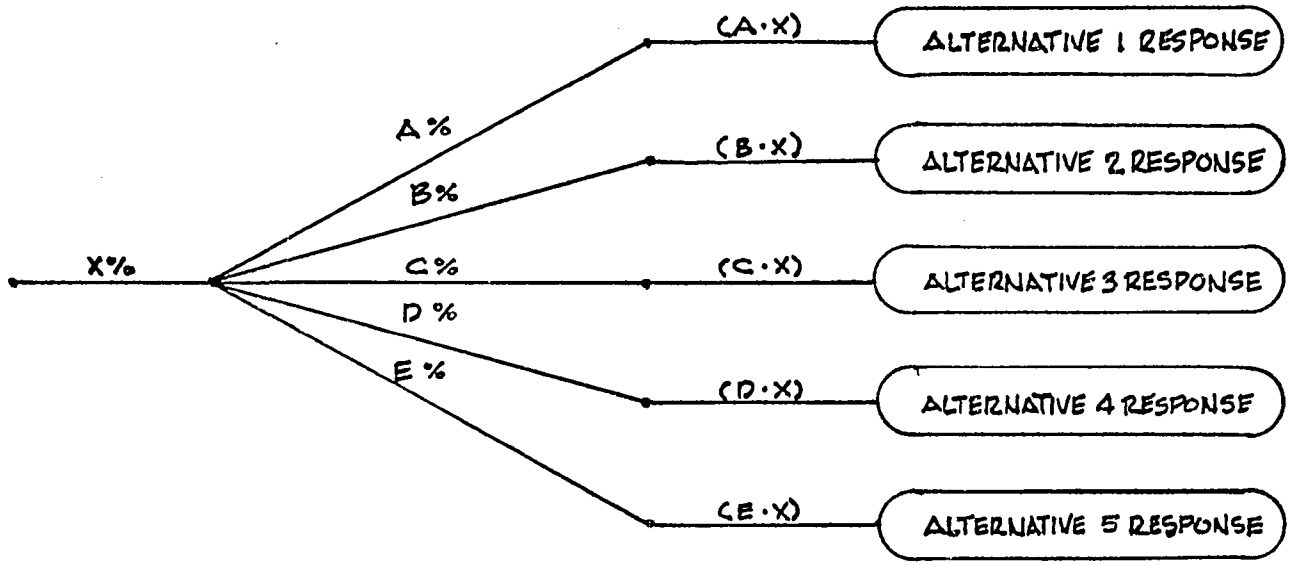

FIGURE 3: User Decision Tree for Five Alternatives, One Phase

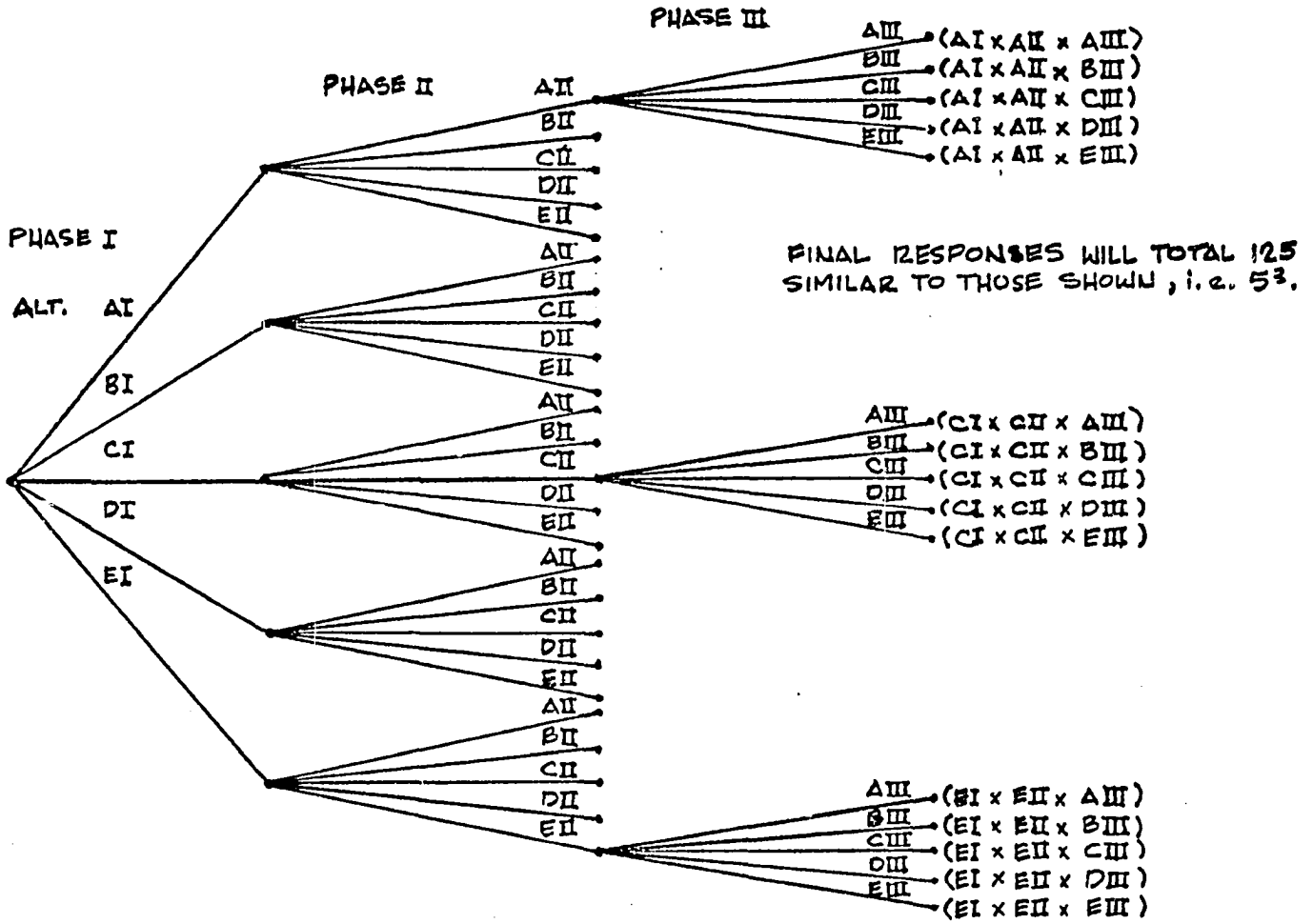

FIGURE 4: User Decision Tree for Five Alternatives, Three Phases

From Figure 4 it can be seen that the tree has become quite "bushy." Making use of the Graphical Evaluation and Review Technique (GERT) developed by Pritsker (100) this tree was reduced to a network as shown in Figure 5. The application of GERT to a problem involving contingent decisions has been demonstrated by Knight (59). In Figure 5 the paths through the network represent individual strategies for the library manager in planning alterations using the various alternatives suggested in the method being developed here. Each path through the network included an alternative from each phase of the user/library interface.

Input for the GERT computer program is described in Appendix III, 4,d, page 215. It required the measure of effectiveness for each alternative plus the probability that it would be effected. In addition it was necessary to have the probability distribution designation for the sample used to determine the measures of effectiveness. Already described are determinations of the effectiveness measures and the probabilities. The designations for probability distribution functions were determined in the following manner.

The Kolmogorov-Smirnov Goodness-of-Fit Test was performed with the data tabulated for each alternative and for the groupings of alternatives within each phase. Using an

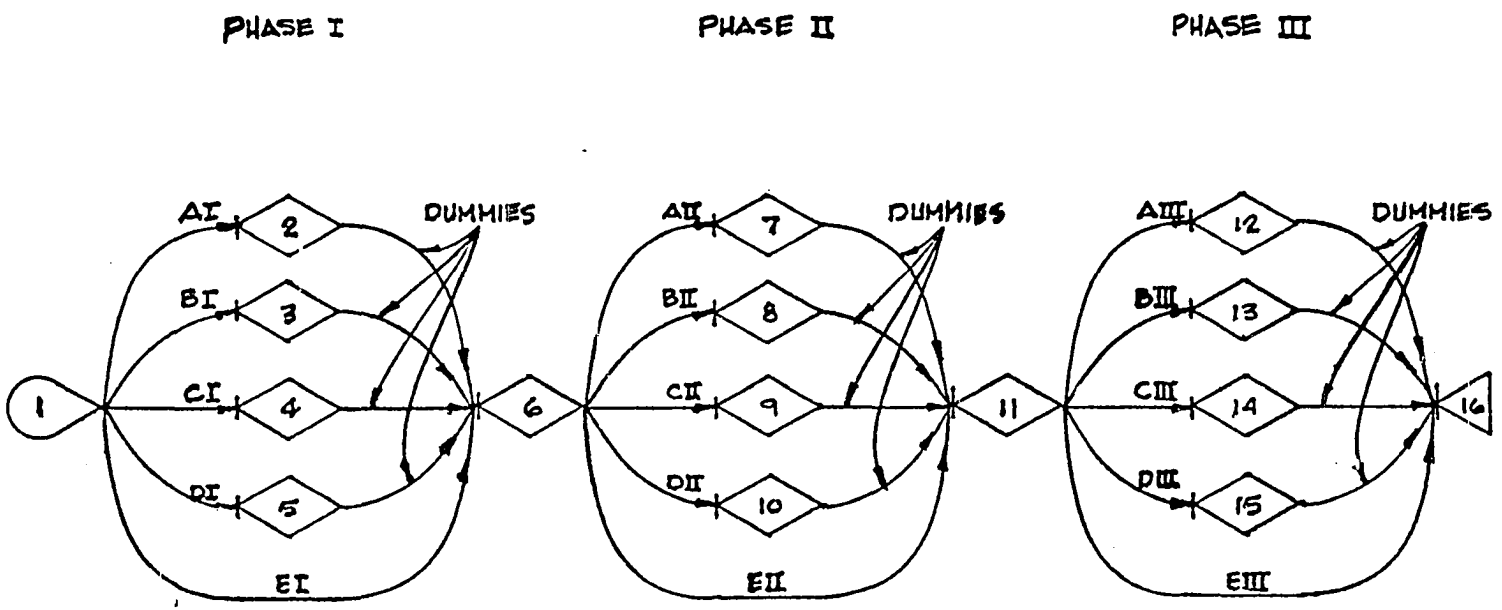

Example values:

Path 1-2-6-7-11-12-16: (AIx1.0xAIIx1.0xAIIIx1.0)

Path 1-2-6-7-11-13-16: (AIx1.0xAIIx1.0xBIIIx1.0)

etc. for 125 paths.

FIGURE 5: GERT Network for Five Alternatives, Three Phases

approximation function for the normal and the uniform distribution functions, the values given by the users were plotted with the aid of the computer program given in Appendix II, Program 3, page 157.

A justification for using a uniform distribution function was that it would permit the use of this function in the GERT model rather than the complex discrete function for which GERT only allowed four values (users) for each branch. Thurstone (128) and Guilford (42) and others working in the field of experimental psychology suggest that the normal distribution function is the most logical to use when an opinion sample is drawn at random from a population of human beings. Hence the curve fit was also checked against the normal distribution function. (An example of this is provided in Appendix III, 3,a, page 182.)

The positive ("yes") measures of effectiveness for alternative groupings found to be influential, the mean values for the probabilities of alternative grouping realization, and the justified probability distribution of effectiveness measures for the grouping were input first to the GERT computer program. In this case, GERT was used for total enumeration of all paths or strategies through the network. Output from the program showed the probability and effectiveness measure for each strategy. The strategy having the highest effectiveness measure would be the one

most seriously considered. The elements of the strategy indicated in the output showed the specific alternative groupings making up that strategy.

Knowing the most effective groupings for each phase, individual alternatives for these groupings were input to the GERT program. The same parameters were required for input: probability, effectiveness measure, and distribution function for each alternative. The network for this was similar to that shown in Figure 5, page 59. GERT allowed selection of the strategy through all phases with the highest measure of effectiveness and indicated which alternatives should be considered to produce this strategy.

The method was tested in the Physics Library, a branch agency of the University of Oklahoma Libraries. The following chapter describes the experimental study beginning with a detailed description of the environment chosen for the test, and its similarities to a special library in an industrial R&D situation.

CHAPTER IV

THE METHOD APPLIED

A. The Physics and Astronomy Library

The experiment to demonstrate the methodology described earlier was conducted in the library of the Physics Department at the University of Oklahoma. Although this library was an academic library associated with the educational objectives of a University department, it had a usage similar to the library in a research and development division of an industrial corporation. For example, faculty members of the Physics department were engaged in both basic and applied research. Differences in economic motivations between industrial researchers and academic researchers would have little effect upon the usage of library facilities. If anything, the academic researcher might have had a different committment to library service than his industrial counterpart, but this should not have affected results of this demonstration in a marked fashion.

Other important parallels and similarities of library operations could be identified. The following description of this library indicates these parallels and similarities with a special library as defined in Chapter I. Figure 6 shows the layout for this library.

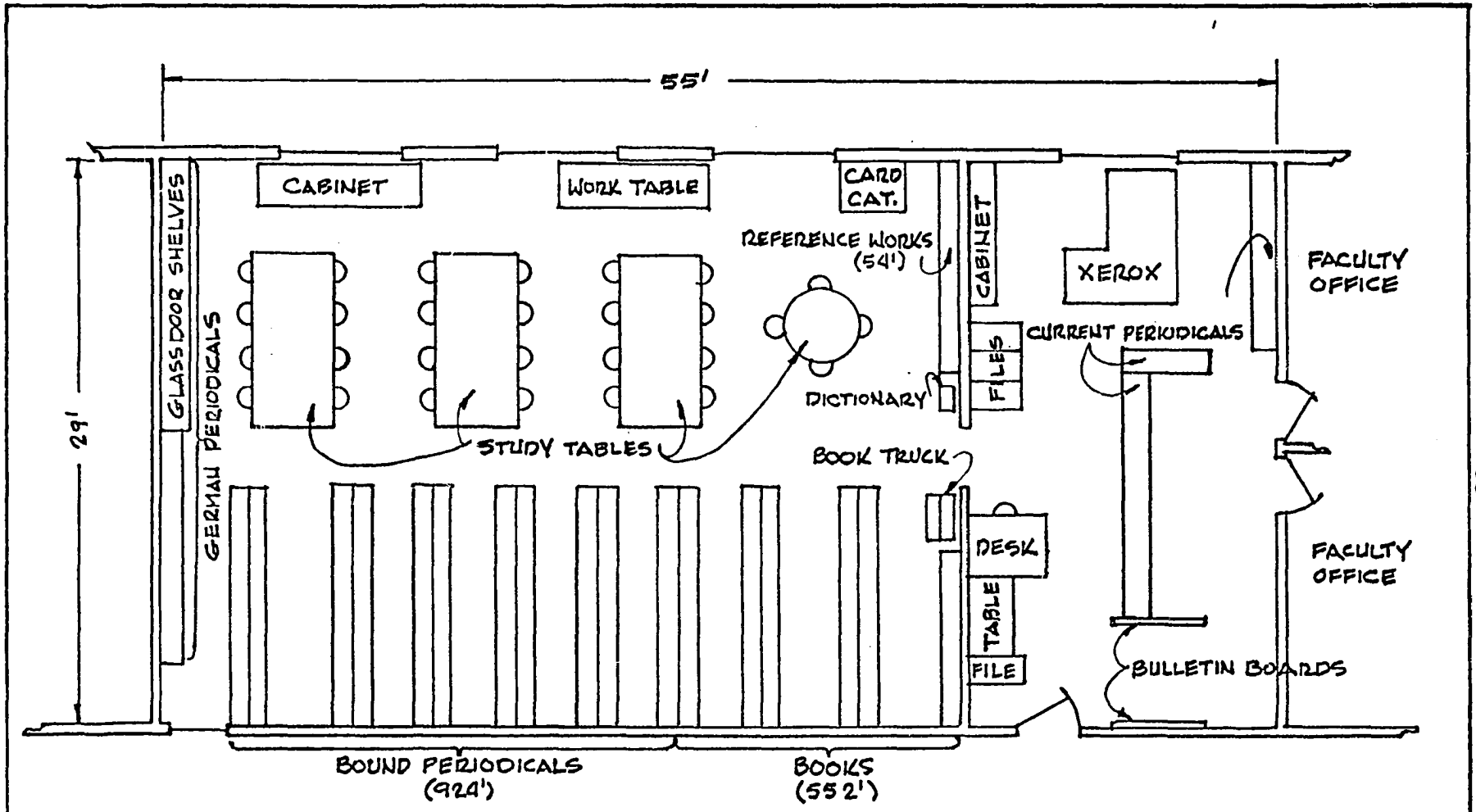

FIGURE 6: Layout of Physics Library, University of Oklahoma

Scale: 1/8"=1'

1. Availability. The Physics library was readily available to faculty members. All faculty and those graduate students who had successfully completed their qualifying examinations were provided with free access to the library at any time through the distribution of keys for the library doors.

2. Users. As noted above, there was a specialized group of users, namely the faculty of the department. They were engaged in research and development programs and projects and had identifiable information needs. These researchers published results of their work regularly in reports and professional papers. Faculty use of the library closely duplicated industrial researcher library use (36).

3. Subject Area. The subject area was specialized, comprising the discipline of physics primarily, with some other disciplines (notably Chemistry and Mathematics) impinging upon it, as would be the case in an industrial R&D situation.

4. Usage. The library was used by faculty principally for bibliographic research related to particular research programs within the department. Literature searching and bibliography preparation were done sometimes by faculty members themselves or by their assistants, secretaries or the library staff.

5. Staff. The library staff consisted of one library assistant with student help. Although the library assistant in charge did not hold the professional library degree, special course work and ten years experience afforded some opportunity to approach the usual special library level of service to the users, and a practicum for the study.

In many special libraries serving R&D personnel, the staff have some subject specialty, or at least knowledgeable acquaintance with the subject materials, which is not the case with the Physics Department library. However, in many industrial situations, the responsibility for library service is given to an employee with little professional library training. Therefore, the Physics Library is not too different from many special libraries regarding staff capabilities and training.

6. Service. The Physics library is open during regular working hours plus evenings and weekend days (Saturdays). As noted above, faculty have access to the facilities by using their own keys at times when the library is not scheduled open. The library has open shelves allowing free access to materials for browsing and personal literature searching. Arrangement places journals, books, reference works and foreign materials in their own respective locations. Periodicals, not usually circulated,

may be set aside within the library for personal use, but allowing access to others as well. Library staff protect materials so designated for personal use from disturbance by other users. The library staff feel the impulse to serve the faculty as special librarians in R&D concerns serve their clientele. At present little in the way of current awareness or selective dissemination of information is practiced in the library, although some attempt is made to assist users in keeping current with developments in their fields of interest. These elements of service also present a similarity to many special libraries in an R&D environment.

7. Size. The collection is not large (13,000) but comparable to that of the DEF Industrial Corporation's Research and Development Division library (69). This is a working collection with limitations of time placed upon retention of periodical literature: holdings are maintained for many periodicals for 10 to 15 years with some of the more important, "classical" journals being maintained from their initial volumes.

8. Policies. Circulation, as noted earlier is not a restrictive policy, but careful attention is given to maintenance of circulation control. Individual hand charging is performed to identify users and locations of materials not on library shelves. Generally, periodicals

do not circulate, particularly current issues, but a Xerox copier is provided which makes copies at 5¢ per page. After hours use is on the honor system. Losses of materials last year amounted to "40 to 50 books"* which is minimal. Binding is performed on a regular schedule for all periodicals in use, but no microforms are included in the collection since equipment does not include readers. Few reference works of a general nature are included (Dissertation Abstracts, for example) because of the proximity of the general University Library which extends the special library correlation. Many special libraries depend on a nearby local public or academic library for similar extension.

9. Autonomy. The Physics Department Library is under the direct supervision of the University Libraries' Associate Director for Public Service. Budgetary matters are handled by the central administration as are processing, bindery, acquisitions, and personnel actions relating to the librarian. The Physics Librarian is able to recommend policies and the hiring of student assistants, and has responsibility for the physical aspects of library operations and provision of service. A member of the faculty is designated as library liaison and serves as moderator of library service to the department. Policy

---

*Estimate provided by the librarian in personal conversation.

of the University Libraries' Administration includes the placing of all materials directly related to the discipline of physics in this library. If duplicate materials from other disciplines are required in the Physics Library some are purchased and located there, but in general this is not practiced.

The Physics Library was used as the experimental laboratory principally because of its similarities to an industrial R&D library as indicated in the foregoing. The Director and Associate Director of the University Libraries, the Physics librarian and the Chairman of the Physics Department approved its use as site for this analysis. Faculty approval was also received in a regular faculty meeting.

The size of the user population made it possible to obtain a sample of reliable size for user analysis and yet not too large to prevent full query. It was possible to eliminate class required usage by restricting the user sample to those members of the department who perform research programs.

Consideration was being given to expected growth of the collection with potential need for expansion of facilities in the future. This aspect provided a practicum for the study. In addition, the lack of special services, such as current awareness, as formal activities afforded

another potential practicum for the analysis.

B. The Method Application

1. Objectives of This Study. The specific objectives for the study were:

a. To determine those aspects of library operation which have the most influence on users;

b. To evaluate user response to suggested changes in the most influential aspects;

c. To determine the strategy for change which will produce the most positive response of the user; and

d. To test the method detailed in Chapter III.

2. Selection of Aspects of Operation. The selection of those aspects of operation to be considered in the study was made in consultation with the librarian, the department chairman, the department faculty/library liaison person, literature and the investigator's personal, professional experience. The following list of 31 aspects was developed for inclusion and grouped under several larger headings to indicate general categories of operation:

Physical facilities
- Acoustics
- Arrangement of furniture
- Atmosphere (heating, air conditioning, etc.)
- Clutter/cleanliness
- Decor
- Furniture
- Lighting
- Location

Collection
- Arrangement of collection
- Bibliography and indexing services provided
- Classification Schemes
- Currency of materials
- Microforms provided
- Retention policies

Staff
- Age and maturity
- Attitudes
- Dress and deportment
- Length of service
- Number
- Qualifications
- Sex
- Work schedules

Policies
- Circulation
- Open stack/closed stack
- User personal habits
- Reproduction facilities

Services
- Current awareness
- File maintenance
- Periodical routing
- Searching, bibliography preparation

These aspects of operation were selected on the basis of their potential for change and the means to effect a change in them. To provide for possible omissions in the list, a category labelled "Other" was added to give each user opportunity to add to the list. During the initial interviews two more aspects were added: Size, under physical facilities, and, Availability of materials (bindery), under collection.

3. Development of the User Questionnaire. To provide the measure of relative significance for the

various aspects in the list, a questionnaire was devised. To allow consideration for each of the three decision points of Figure 1 (page 37), each was labelled as a separate phase in the user/library interface. Also reflected in the questionnaire was the difference of influence for each aspect of library operation for the three phases. The questionnaire is shown in Appendix I, Exhibit 1, page 137.

4. Questionnaire Administration. To facilitate user understanding and completion of the questionnaire, it was administered by interview. This gave opportunity for the "give and take" of discussion and allowed personal explanation in a dialogue with each user. It provided a common ground of understanding among all users queried and the investigator.

The sample of users selected for the study consisted of faculty members. As suggested above (Part A of this Chapter, page 62), faculty usage closely approximated use of library resources in an industrial R&D situation. Appointments were made for individual meetings with each faculty member.

The interview included a brief statement of the problem and explanation of the project. The questionnaire form and its contents were discussed, particularly the flow

chart of the user/library interface. Terminology, necessarily abbreviated on the form, was defined as the interview progressed.

Each person interviewed was asked to consider the total list and at first to restrict it to Phase I. He was asked to imagine himself in the position of making a decision to go to the library for some information need, to study the list and make any additions for aspects of operation influential on him which were not on the list. He was then to rate the various aspects of operation on the basis of their influence on his decision in this phase. The aspect(s) having the least influence were to be rated zero. The rest were then to be rated from this base up to a maximum of 100.

Having completed the first column of the questionnaire, his attention was directed to the second column, representing Phase II of his interface with the library. He was asked to consider himself as having made the decision to go to the library, having entered it and performing his search for citations to the information he was seeking. In comparison with the ratings already given in the first column, he rated the same aspects on the basis of their influence on him as he performed this search task. Beginning again with the least influential aspect(s) and applying a rating of zero, the rest of the list each

received a higher rating depending on its influence on him at this phase of the interface. In this instance the rating for any aspect could be higher or lower than the rating given in column one.

Directing the attention to the third column, Phase III, the interviewer asked the respondent to consider himself actually looking for the location in the library where he would find the material cited in Phase II. Again the same rating procedure was employed as described for the first two columns of the questionnaire. And again the rating could be higher or lower than either of the former two ratings for any particular aspect.

5. Mathematical Analysis of Data. The aim of this element of the method was to determine the relative significance of the various aspects to each other in the opinions of the users studied. Data was tabulated for each phase separately (see Appendix 1, Exhibits 2-4, pages 138-140). A data matrix was developed to record for each user the ranked significance of each aspect being considered in the study.

As described in Chapter III (page 45), the users included in the study were treated as judges and the aspects as parameters. The mathematical manipulation of the data was performed for each phase and a normalized relative

significance measure developed for each aspect. This was performed with the use of the computer program developed for this investigation. (See Appendix II, Program 1, page 151.) Output from this program is provided in Appendix III, 1, pages 158-178. A further computer calculation was done in a terminal, time share mode, to rank these normalized relative significance measures, and to generate a cumulated, normalized list of them. (See Appendix II, Program 2, page 155, for the computer program and Appendix III, 2, pages 179-181, for outputs.)

Appendix III, 2 shows those aspects considered most influential, that is, above the 25% point. This was chosen as indicative that alteration in these aspects would influence users 75% of the time. In other words this was the same as selecting a 75% satisficing level for users. Results of this indicated that 18 aspects were influential in Phase I across the user population, 12 in Phase II, and 9 in Phase III. These aspects are shown in Table I, following.

Table I

Significant Aspects Ranked

Aspects of Library Operation	Rank Phase I	Phase II	Phase III
A. Physical Facilities			
Acoustics	18	--	--
Arrangement of space	17	--	--
Atmosphere	14	--	--
Lighting	13	12	--
Location	4	--	--
Size (added by respondents)	12	--	--
B. Collection			
Arrangement of collection	5	4	4
Bibliography and indexing services	3	1	3
Currency of materials	1	3	2
Retention policies	11	7	6
Availability of materials (bindery) - added by respondents	9	5	5
C. Staff			
Attitudes	7	6	7
Qualifications	15	9	9
D. Policies			
Circulation	8	10	8
Open stack/closed stack	2	2	1
Personal user habits	16	--	--
Reproduction facilities	6	11	--
E. Service			
Current awareness	10	8	--

In the above table, those aspects which fell below the 75% satisfying level have been ommitted.

6. Alternative Selection. When the calculations had been performed and the most influential aspects of library operation determined, alternatives related to the various aspects were selected. The Director and Associate Director of the University Libraries were consulted. The following list of possible changes was developed for the influential aspects as shown. The groupings were slightly altered for this listing. Since "Services" had only one influential aspect associated with it as a larger group, it was combined with the group labelled "Collection" into one group labelled "Collection and Services." The arrangement of the list was changed, too, to place "Physical Facilities" last because of the suspected emotional import that users might attach to it. If an emotional bias were present it was felt that this group would focus it. Hence, placing it last would help in relieving whatever effect it might have on the results.

Alternatives for Change

A. Collection and Services
(Current awareness)
1. Provide a current awareness service for new materials received in the library, giving a list to faculty each week.
(Currency of materials)
2. Shorten processing time by reducing the amount of cataloging, marking, subject entry cards, etc.
(Bibliography and indexing services)
3. Add more indexing and abstracting services.
4. Combine all index services in one place in the general library.

(Arrangement of collection)

5. Shelve materials by size (using three size categories)
6. Intershelve books and journals.

(Retention policies & availability of materials-Bindery)

7. Retain unbound journals for a maximum of 5 years, then bind and store in the general library.
8. Buy journals on microfilm, hold unbound issues until microfilm received, then discard hard copies.
9. Buy duplicate issues of journals and keep one in mint condition for binding.

B. Staff

(Qualifications)

1. Hire only professional librarian and technicians for assistants.

(Attitudes)

2. Maintain an ongoing training program for staff.

C. Policies

(Circulation)

1. Stricter circulation policies restricting use to library room only, except in special cases.

(Open stack/closed stack)

2. Closed stacks except for special permit holders.

(Personal user habits)

3. Stricter policies on user behavior: no smoking, eating, drinking, or talking in the library. (Also applies for Atmosphere)

(Reproduction facilities)

4. Free Xeroxing for any user, with no restrictions on use of the machine.

D. Physical Facilities

(Acoustics)

1. Reduce noise levels with acoustical materials to absorb sound.

(Arrangement of space)

2. Rearrange furniture and space allocated for office, shelves and study tables.

(Atmosphere)

-- See C. 3, above.

(Lighting)

3. Add more lighting.

(Location)
4. Move the library to the Physical Sciences Building and combine with Mathematics and Chemistry.
5. Move the Physics collection to the general library and combine with Science materials.

(Size)
6. Increase size of the library.
7. Decrease size of the library.

In the selection of these alternatives, an attempt was made to select possible alterations that could be made, that would be practical, acceptable in some degree to both administration and users, and having at least a remote potential for being made. Wording was chosen to be as meaningful as possible to users, but further explanation of advantages and disadvantages of each alternative was also to be included as shown by the questionnaire in Appendix I, Exhibit 5, pages 141-144.

7. The Second Questionnaire. In accordance with the method described in Chapter III, the second questionnaire was designed to be a sort of ballot on which the user could "vote." As shown in Appendix I, Exhibit 5, pages 141-144, the user was asked to allot a percentage "yes" and a percentage "no" summing to 100% for each alternative on the list. He was asked to consider each phase of the user/library interface separately as done with the first questionnaire. Instructions and the advantages and disadvantages of alternatives were also provided. With these features, and depending on experience of the users

with the first questionnaire, it was decided to administer this one without a personal interview.

The questionnaire could be completed by users at their own convenience. However, a follow-up telephone call was made to each soliciting his help and encouraging completion of the form by a particular time. This call also gave opportunity to discuss the questionnaire and clear any possible misunderstandings.

Of the 20 faculty members in the department, 15 returned the questionnaire before the due date. Two more were received too late to be included in results. The 75% return, however, was deemed valid as a sample of the total faculty size. Justification for validity of this return is supported by Kerlinger (57a). He points to the drawback of poor returns to mail questionnaires such as the one used in this study. According to Kerlinger 50% to 60% can be considered the best return a researcher could expect. Since return of this questionnaire was higher, use of the data collected was considered acceptable.

8. Establishing Probabilities for Alternative Realization. While the faculty members were completing the questionnaires, the Director and Associate Director of the University Libraries were interviewed. They were asked to assign probabilities to alternatives reflecting

the feasibility that the changes would be realized. The following list (with short form labels) shows the assigned probabilities:

A.	Collection and Services	
	1. Current awareness	80%
	2. Shorten processing	20
	3. More indexing and abstracting services	25
	4. Combine indexes in main library	10
	5. Shelve materials by size	5
	6. Intershelve journals and books	90
	7. Journal retention and binding	60
	8. Microfilm for journals	75
	9. Duplicate issues of journals for binding	10
B.	Staff	
	1. Hire professionals	60 if moved 5 if not moved
	2. Ongoing training program	10
C.	Policies	
	1. Stricter circulation	3
	2. Closed stacks	10
	3. Stricter user behavior	2
	4. Free Xeroxing	0.5
D.	Physical Facilities	
	1. Reduce noise levels	15
	2. Rearrange furniture and space	50
	3. Add more lighting	30
	4. Move to Physical Sciences Building	85
	5. Move to main library	5
	6. Increase size of library	1
	7. Decrease size of library	0.5

During the interview it became evident that a conditional probability existed for the alternatives related to staff and to physical facilities. If the library were moved to the Physical Sciences Building and combined with Mathematics and Chemistry (Alternative D. 4), the probability

of hiring a professional librarian and technicians for assistants (Alternative B. 1) increased from 5% to 60%. Therefore if the results of the second questionnaire indicated that both of these alternatives were influential in a particular phase (D. 4 was only included for Phase I), the joint probability would have to be used, or the network designed to consider the dependence.

These probabilities are very subjective. They were provided by the Associate Director on the basis of his experience and knowledge of the library system, including the possible effects on other branch libraries resultant from institution of any of these alternatives. It must also be kept in mind that these were established with little regard for the actual cost of their institution, at least from the standpoint of availability of funding to pay for them.

9. Data Analysis. When the second questionnaire was returned, the responses were tabulated showing the reaction of each user, positively and negatively, to the various alternatives presented to them. A separate tabulation was made for each phase of the library/user interface (See Appendix I, Exhibits 6 to 11, pages 145-150). The grouped alternatives were collected into averages for each respondent. In addition, for the groups, a

Kolmogorov-Smirnov goodness-of-fit test was performed (See Appendix II, Program 3, page 157), to establish whether a uniform or normal distribution could be used when the GERT network analysis was run. A sample of the results of the Kolmogorov-Smirnov tests is included in Appendix III, 3, pages 182-184.

It was decided to use only the positive reaction values as effectivness measures, since the users had been asked to respond to each alternative with a percentage "yes" and a percentage "no" for each, totalling to 100%. Thus the values used as effectiveness measures (Rho) would be lower for higher "no" values and reflect the user's preference for a particular alternative.

The Kolmogorov-Smirnov goodness-of-fit test was made for both uniform and normal distributions and good fits were achieved for both. (Tabulation of maximum differences is shown in Appendix III, 3, page 183.) However, it was decided that the distribution having the better fit would be the one used despite the fact that either could be used in every case, the difference being less than that required for a significance level of 80% (114, p. 251).

The GERT network for positive reaction to alternatives in each phase became exceedingly complicated. There were 22 different alternatives in Phase I, 15 in Phase II, and 12

in Phase III. Using all of them would produce 3,960 strategies (22x15x12). To simplify the network a general grouping network was designed and designated GEN1. This is shown in Figure 7. In the calculations, P represents the probability that an alternative will be realized and Rho represents the measure of effectiveness on the users of that alternative, that is, the mean of the "yes" responses.

Solution of this network indicated the most important aspect grouings through the network, as follows (See Appendix III, 4, a, page 185.):

Highest value for Rho= 1.562: Path 1-4-9-12-15-18-21
or Staff-Staff-Staff.
P=.00042 Var. Rho=0.0
Highest value for P=.074: Path 1-2-9-10-15-16-21 or
Collection & Services-Collection & Services-Collection & Services
Rho=1.018, Var. Rho=.0331

These paths were selected on the basis of inspection. The network solution was brief enough to allow this method for selection of the best path. Choosing the path with highest value for Rho selects the best path from the standpoint of effectiveness. Choosing the path with the highest value for P selects the path with the best probability for being effected. Both paths were investigated in subsequent analysis of individual alternatives.

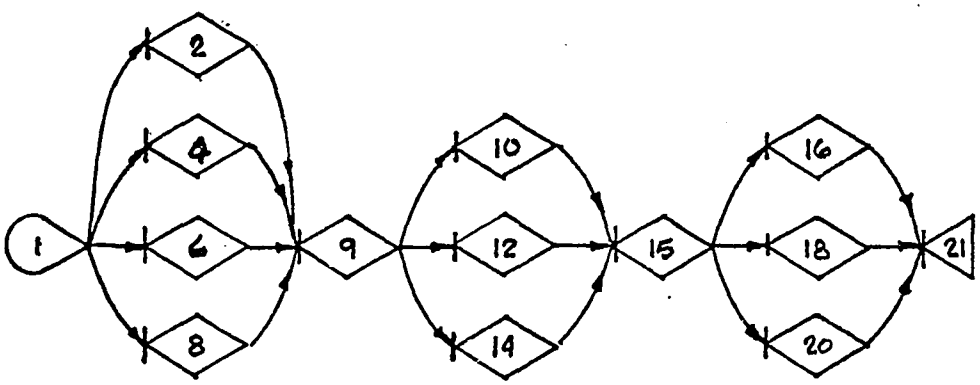

Legend:

Branch 1-2: Collection & Services
P=.420, Rho=.356, Uniform Distribution
Branch 1-4: Staff - P=.075, Rho=.452, Uniform Dist.
Branch 1-6: Policies - P=.039, Rho=.381, Uniform Dist.
Branch 1-8: Physical Facilities
P=.266, Rho=.309, Uniform Distribution
Branch 9-10: Collection & Services
P=.420, Rho=.362, Uniform Distribution
Branch 9-12: Staff - P=.075, Rho=.567, Uniform Dist.
Branch 9-14: Policies - P=.039, Rho=.291, Normal Dist.
Branch 15-16: Collection & Services
P=.420, Rho=.300, Normal Distribution
Branch 15-18: Staff - P=.075, Rho=.543, Uniform Dist.
Branch 15-20: Policies - P=.039, Rho=.283, Normal Dist.
All other branches are dummies with P=1.0, Rho=0.0 and all uniform distributions. Values for P and Rho are the mean values for all alternatives and all users.

FIGURE 7: Network GEN1

If the path for Rho_{max} is used, the network for subsequent solution to determine the best strategy for change in library operations will be as shown in Figure 8 using staff alternatives in all three phases, designated RHO2. Solution of this network indicated the best strategy as follows (See Appendix III, 4,b, pages 189-190):

> Highest value for Rho=1.65: Path 1-3-5-7 which is "Provide ongoing training program for staff" in all phases. P=.001.
> Highest value for P=.132651: Path 1-2-8-3-4-9-5-6-10-7 which is "Move the Library and hire professional librarian and technicians for assistants" in all phases. Rho=1.47 (the lowest value).

If the path for P_{max} through Network GEN1 is used, the network to determine the best strategy will be as shown in Figure 9, using alternatives for collection and services in all three phases, and designated C&S. Solution of this network indicated the best strategy is as follows (See Appendix III, 4,c, pages 191-214.):

> Highest value for Rho=1.764 (Variance-0.0): Path 1-2-10-11-19-27 which is "Current awareness," "Current awareness," "Buy duplicate copies of journals and bind mint copy." P=.064.
> Highest value for P=.729: Path 1-7-10-16-19-24-27 which is "Intershelve books and journals" for all phases. Rho for this path is .85 (Variance-.2877), one of the lowest values.

This latter network is included as an example of a more complicated system of alternatives. The study of the Physics Library, however, was based on user satisfaction which suggests the use of Rho_{max} for best strategy selection.

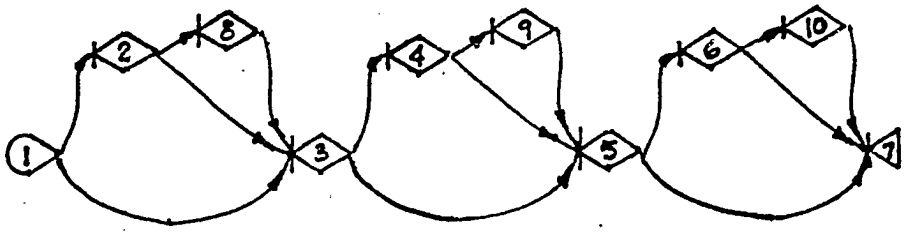

PHASE I PHASE II PHASE III

Branches 1-3, 3-5, and 5-7: Maintain Ongoing Training Program for Staff - P=.10, Rho_I=.483, Rho_{II}=.600, Rho_{III}=.567, all uniform distributions.

Branches 2-8, 4-9, and 6-10: Hire Professional Librarian and Technicians for Assistants (Library moved to Physical Sciences Building) - P=.51 (.60x.85), Rho_I=.42, Rho_{II}=.53, Rho_{III}=.52, all uniform dist.

Branches 2-3, 4-5, and 6-7: Hire Professional Librarian and Technicians for Assistants (Library not moved) - P=.05, values for Rho remain the same, all uniform distributions.

FIGURE 8: Network RHO2

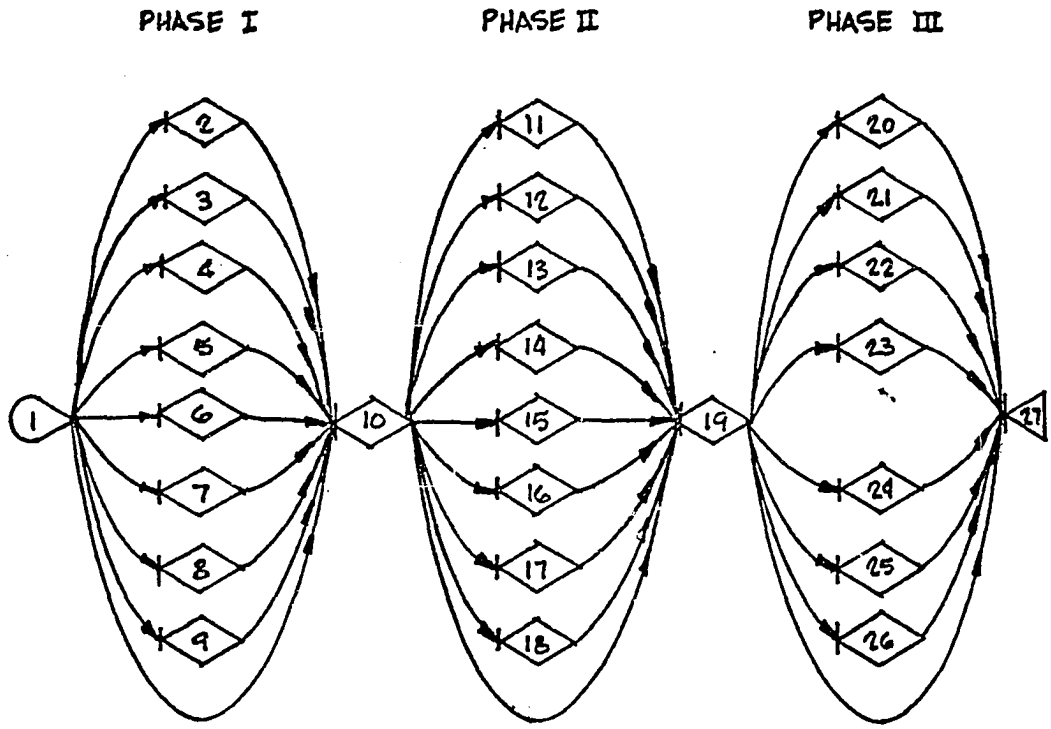

LEGEND:

Phase	A-1	A-2	A-3	A-4	A-5	A-6	A-7	A-8	A-9
I	.627	.300	.383	.127	.233	.287	.297	.220	.477
(Var.)	--	.250	.261	.157	.233	.307	.243	.207	--
II	.590	.280	.410	.170	.260	.290	.260	.207	.530
(Var.)	--	.234	.300	.227	.236	.311	.215	.208	--
III	--	.317	.343	.267	.227	.273	.247	.230	.547
(Var.)	--	.269	.280	.277	.226	.311	.216	.201	--
Distr.	U	NO	NO	NO	NO	NO	NO	NO	U
Prob.	.80	,20	,25	.10	.05	,90	.60	.75	.10

A-1: Branches 1-2,10-11; Current Awareness Service Provided
A-2: Branches 1-3,10-12,19-20; Shorten Processing Time
A-3: Branches 1-4,10-13,19-21; More Index & Abstract Services
A-4: Branches 1-5,10-14,19-22; Combine Indexes in Gen. Library
A-5: Branches 1-6,10-15,19-23; Shelve Materials by Size
A-6: Branches 1-7,10-16,19-24; Intershelve Books & Journals
A-7: Branches 1-8,10-17,19-25; Hold 5 Years, Store in Gen. Lib.
A-8: Branches 1-9,10-18,19-26; Buy Microfilm, Discard Hard Copy
A-9: Branches 1-10,10-19,19-27; Buy Duplicates for Binding

FIGURE 9: Network C&S

Therefore the plan should be to provide an ongoing training program for the staff.

It would appear from the solution for the network labelled RHO2 that the library administration, if interested in user satisfaction, should examine the alternative suggesting the training of staff as a possibility for realization and try to increase the probability that it will be done. Perhaps if increased funding becomes available, this alternative could be given high priority for realization.

CHAPTER V

INTERPRETATIONS, SUMMARY AND CONCLUSIONS

1. Objectives. The method described in Chapter III and the experiment to test it described in Chapter IV are based on user response. User opinion of various aspects of library operation and of feasible alternatives for change within these aspects is applied as a measure of effectiveness for the suggested changes. Since users and their opinion are the basis, non-users have been outside the scope of the study.

The implied purpose in an application of this method, therefore, will be to provide better service to those who already use the library. It is reasonable to suppose that any alteration in library operations which is effective in the opinion of users might be similarly effective on occasional users and on non-users as they become cognizant of benefits associated with the change.

As an example of this, in the study of the Physics Department Library at the University of Oklahoma described in Chapter IV, the overall best strategy for change suggested that an ongoing training program be provided for the staff. Such a program would be aimed at upgrading the level of service which the staff could perform for users. It is quite conceivable that improvement in abilities of staff

might have a beneficial effect not only on regular users, but also on occasional users. As this effect is felt on the members of the organization, it is possible that non-users could become aware of the improvement and be encouraged to make use of the library resources.

Regarding the apparent attractiveness of the suggestion for additional training for the staff, it should be noted that the library assistant presently in charge of the library did not have professional capabilities. It is possible that users were unaware of the advantages of full professional service by a librarian with some subject specialty background. With such an awareness, they might have placed a higher effectiveness value on the alternative which would provide for hiring a professional librarian and technicians for assistants. No attempt was made in this study to determine their degree of acquaintance with such potential service, but the bias thus injected does not damage the study as a demonstration of the elements of the method developed earlier.

A further suggestion which could have influence on occasional users and non-users is the suggestion derived from the solution of the network labelled C&S. The strategy strongly suggested from this solution was the institution of a current awareness service to inform users about new materials being received by the library. If such an

activity were performed, it could offer encouragement to occasional users and to non-users to make use of the library resources to satisfy their information needs.

Therefore, although the method is aimed principally at improvement of service to regular users, decisions made on the basis of the method results could have some positive effect on others within the organization of which the library is a part.

A further benefit which may be derived from application of the method can be found in justifying projected alterations. If alterations in library operations are being considered by library administrators, the positive responses to these changes by the users of the library could give support to arguments favoring funding of such changes. As suggested earlier, an extension of the results of such a study to produce a cost/effectiveness ratio can be useful in making comparisons between several alternatives for resource allocation.

The objectives for each situation will vary according to the individual library's reasons for performing the study and applying the method. The method has the flexibility to accommodate such differences of purpose and provide information to a library manager to help in making decisions between strategies of change in line with particular reasons

for instituting alterations in library operations.

2. Selection of Aspects of Operation. The selection of aspects of operation for the Physics Department Library was done to illustrate the method described in Chapter III. It was suggested in Chapter III and borne out in the experiment of Chapter IV that the initial selection be tentative since users could add other influential aspects during the study.

The general model of the user/library interface shown in Figure 2, page 39, helped in this selection, as did the layout of the particular library being studied, as shown in Figure 6, page 63.

Criteria for selection of the operational aspects of a particular library could vary from situation to situation. These, too, will depend in some degree on the specific objectives for the study. In the case of the experiment in Chapter IV, the objectives included determination of the most influential aspects in the opinion of the users. This need not have been the case. It could have been possible that some particular change in library operations was being contemplated.

For example, in the experimental study, a move of the library from its present location to the new Physical Sciences Building where it could be combined with the

Mathematics and Chemistry collections had a high probability (85%) for realization. In this case, then, the particular aspects of library operation could be restricted to those related to physical facilities, or to staff qualifications, or perhaps to other aspects related directly to the move. In this instance, then, an important criterion for selection would be the relationship of selected aspects to the contemplated change. At the same time, however, feasibility would still be important, but to a lesser degree and only within the context of the contemplated change.

In the application of the method to the Physics Department Library, feasibility of change in the various aspects played a small part in their selection. At this stage in the method, since the objective was to determine the most influential aspects, as many different aspects of library operation as possible were included. Attempt was made to anticipate influence felt by the users. The addition of two more aspects not initially selected indicated that the attempt was largely successful, but also pointed to the importance of allowing for such additions.

The danger in the approach as made in this experiment became evident in the later stages of the method application. Since a large number of aspects of library operation was used, there were many aspects necessarily

included in the satisficing groups for each phase of the user/library interface. This meant that a large number of alternatives had to be devised for the subsequent stages and resulted in a complicated decision network for the "average" user's decision process model. This necessitated a simplifying of the GERT network model to that shown in Figure 7, page 84, designated GEN1. Selection of fewer aspects of library operation would allow for selection of fewer alternatives for change and hence a less complicated network model. This would possibly eliminate one run of the GERT computer program and provide an earlier solution to the problem.

3. The First Questionnaire. The first questionnaire was intended to establish which aspects of library operation were most influential on users in their decision processes throughout the user/library interface. Little difficulty was experienced in administration of the document. The users were capable of understanding the process and using their imagination in the hypothetical interface suggested to them. The interview used to administer the questionnaire helped in this understanding and use of imagination. It also allowed opportunity to discuss the project and the operation of the library.

Because the investigator was not a member of the library staff, perhaps the interviews were more candid. It is

possible that respondents would be less likely to be completely forthright in their criticisms and suggestions if a member of the library staff administered the questionnaire. To overcome this element of difficulty, it might be possible to have someone else interview the users or perhaps to establish a candid rapport with the user by taking a little longer in the interview.

The selection of a sample of the users suggested in Chapter III assumes randomizing. In the experimental application, the sample consisted of the whole population of users for administration of the first questionnaire. As indicated in Chapter IV, all but one was included in the first questionnaire and five were missed from the data gathering in the second

The sample need not be a random selection from the user population. It is quite possible that the special aims of the library will encourage selection of a non-random sample. It might be that only administrators of the parent organization be included in the study if these are the users which the library manager feels will hold top priority for receipt of library service. Or a personal objective on the part of the manager to satisfy another particular group will dictate that this particular group be the sample.

In another situation it could be valid to select the sample for study from the non-users of the library. This would aim at finding the reasons why they do not use the library and what strategies would increase the attractiveness of the library to them to raise effectiveness measures above zero.

Whatever selection is made, care must be taken to discover possible bias inherent in results because of selection criteria and inferences limited accordingly.

4. Results of Questionnaire. The method applied to reduce the data gathered by administration of the first questionnaire determines the relative significance of each aspect of library operation in the opinions of the users. To find this relative significance, Thurstone's law of comparative judgment was used. A part of the computation included a check on the consistency of the judges (users) and some inconsistency was found to exist. (See page 49 and Appendix III, 1, pages 162-63, 169-70, 176-77.)

A final matrix was calculated showing the difference between the times parameter i was judged more significant than parameter j and the theoretical number of times it should have been judged more significant. In the application of this method, a value for this difference three times the average deviation was considered to

indicate an inconsistency (89, page 513). In the study of the Physics Library this happened for several of the aspects.

In Phase I the inconsistencies showed in judgments of aspects as follows:

19: Length of service of the staff,
20: Number of staff, and
22: Sex of the staff.

In the consistency check matrix for this phase (Appendix III, 1, pages 162-63) the inconsistency for the above three aspects was as follows:

Aspect 19 (Length of service of staff) was judged less precisely with respect to aspect 18 (Dress and deportment of staff);

Aspect 20 (Number of staff) was judged less precisely with respect to:
Aspect 18 (Dress and deportment of staff), and
Aspect 19 (Length of service of staff);

Aspect 22 (Sex of staff) was judged less precisely with respect to:
Aspect 5 (Decor of library facilities),
Aspect 12 (Classification schemes),
Aspect 14 (Microforms provided),
Aspect 16 (Age and maturity of staff),
Aspect 18 (Dress and deportment of staff),
Aspect 19 (Length of service of staff),
Aspect 20 (Number of staff), and
Aspect 21 (Qualifications of staff).

As indicated this showed that the users of the library were less precise in their judgment of the importance of these three aspects related to the others noted. This can be explained when looking at the final outcome of their significance rankings. All three aspects were very low, ranking as 30, 31 and 33 respectively. This low

significance of the three aspects could explain the inconsistency in view of the obvious unimportance of these three in comparison with the other aspects. In the other direction, taking those aspects with which the judgment was inconsistent and viewing their comparison with the three aspects in question, the judgment was evidently consistent. Of these only one, aspect 21, qualifications of staff, was considered by the users significant enough to be included in the continuing study. This aspect was ranked 15 out of the 18 in the 75% satisficing group. On the basis of this argument it was felt that the inconsistency indicated was not of a damaging nature.

In Phase II there were seven aspects with indicated inconsistency:

18: Dress and deportment of staff;
19: Length of service of staff;
20: Number of staff;
22: Sex of the staff;
26: Personal habits of users;
31: Periodical routing service; and
32: Bibliography preparation and searching service.

In this case the same argument was valid. None of them was considered as significant enough in this phase to be included in the final 75% satisficing level. All were in the lower 5% of the satisficing cumulated values. In Phase III aspect 22 was the only one where inconsistency was indicated. In this phase, as in the other two, this aspect, sex of the librarian, was found to be the least

significant, ranking as 33 in the total.

For all aspects of operation found to be in the 75% satisficing level of significance, consistency among the judges was proved. Therefore in the application of the method the consistency check should be conducted to provide confidence in the judgments of the users about the significance of various aspects of operation as they influence users throughout the interface with the library.

From the first questionnaire, then, the library manager will know what aspects of the library are most influential on decisions made by the users of the library. Whether this influence is positive or negative, the knowledge will be useful in indicating the areas most sensitive in the minds of those served by the library. If no more of the method were completed than this, the manager would be able to know which aspects of the library would produce the most effect upon users, and be encouraged to give attention to these areas in the regular operation of the library.

The level of sufficient satisfaction (satisficing), as suggested earlier (Page 50), should reflect the percentage of time the users are influenced by the aspects considered most influential. In the study of the Physics Library, a cutoff at 25% was chosen to indicate those aspects of library operation included in the upper 75% of the normalized

cumulation of relative significance values ranked from smallest to largest. This was the same as saying that consideration of these items in subsequent analysis would have influential effect on users 75% of the time, or, put another way, would account for 75% of the influence experienced by users from the total number of aspects of operation in the study. A value of 51% would represent a majority of influence, but the higher figure was used to assure this majority.

The percentage chosen can be left to the particular study and its investigator. A possible reason for choosing a lower figure for the most influential could be to reduce the total number of aspects found to be influential. In the experiment of Chapter IV, a rather large number was left in the study after computations were done. Choosing all aspects indicated by the cumulation (Appendix III, 2, pages 179-181) values above .50 would have reduced the aspects for further study to 10 in Phase I, 7 in Phase II, and 5 in Phase III. Conversely, if only a few aspects of operation were considered in the first questionnaire, it would have been possible to use all of them (100% satisficing) for subsequent analysis. In this case, the method could be altered to eliminate the first questionnaire entirely and proceed directly to selection of alternatives and determination of effectiveness measures.

5. Alternatives and the Second Questionnaire. In the application of the method, it will not be necessary to consider alternatives for all aspects of library operation until the most influential ones have been determined. When the calculations have been performed attention can be focused on the aspects indicated by the satisficing level and specific alternatives devised for them.

The element of feasibility enters into the selection of alternative changes to be suggested. As in the case of the aspects of operation, if no change is possible the feasibility can be considered as zero and that alternative disregarded. Feasibility can be determined on the basis of time and/or available funding. Possible effects on other elements of the organization can also be taken into account in selection. Since feasibility determination will vary from situation to situation, it was considered outside the scope of this investigation.

In the experiment described in Chapter IV, time and possible funding were ignored as will be explained when considering the assignment of probabilities to the individual alternatives selected. Attempt was made to consider alternatives for which some resources and encouragement for realization might be found. In some instances they reflect changes which the library administration would like to make at some time. For

example, the move of the collection and combination with Mathematics and Chemistry was attractive to the library administration. Likewise attractive was the suggestion that a professional staff be engaged for the library. Serious attempt was made, however, to reduce subjective bias possible because of these attractions.

As is evident from the list of alternatives selected, the number of alternatives for each aspect of library operation determined as influential was not uniform. (See page 76). In some instances two were selected, in one instance three and in others only one. In other applications it could be possible to select a uniform number of alternatives for each influential aspect of operation to reflect an increase, a decrease and the status quo in user preference. In this way the method could be used to determine effectiveness of library operations as they are practiced, and produce a comparative measure between them. In the study reported here, however, specific alternatives were used to demonstrate the use of the method as a planning aid.

The second questionnaire was designed to be completed by the user without an interview by the investigator. This necessitated careful attention to instruction accompanying the questionnaire and to the statements showing advantages and disadvantages for the alternatives suggested. The request for percentage amounts indicating positive or

negative influence was made because it was felt that it would be meaningful to the users being queried. Dollar amounts could have been used, as was done in the Raffel and Shishko study (103), but it was felt that attachment of dollar values to the alternatives would bias the responses. Some were much more expensive than others, and funding to support them was not available in any event. All that was desired was user opinion of the respective alternatives and not user attitudes toward expenditure of money to institute them.

The questionnaire as used in the investigation of the Physics Library proved to be useful in determining the effectiveness measures for suggested alternatives for change in influential aspects of library operation. Conversations with users indicated that there was good understanding of what was asked and no difficulty in providing honest responses.

6. Probabilities for Alternative Realization. A necessary parameter for input to the GERT network computer program was the probability that a particular branch in the network be realized. In this instance, the probability was the same as the probability that a particular change would be made in library operations. Also integral to the achievement of method objectives was the combination of library administration attitudes and expertise with

user opinion. The estimation by the library administrators of probability that any alternative for change in library operation be instituted allowed for this combination. The managers, administrators, funders and others who have the responsibility for instituting change in library operation could be queried individually and asked to provide their personal estimates of the probability for each alternative being realized. The mean value of their estimates could then be used as input for continuance of the method.

In the experiment to demonstrate the method as reported in Chapter IV, the probabilities were estimated for institution regardless of when they might be effected. In this instance, with no regard for available funding, it was necessary to ignore the time frame in order to have any probability for institution at all. On the basis of early alteration in any of the services, the probability would have been zero except for those which would have no cost. It was felt that cost of alteration at this stage would have seriously biased the method. It should be recognized that if there is absolutely no possibility for instituting change in library operation, there would be no reason to apply the method in this fashion except to find whether influences determined earlier were positive or negative.

The probabilities were assigned by the Associate Director of the University Libraries. As pointed out earlier (Page 81) they are very subjective. However, they serve to illustrate the application of the method. In another application, other elements could be taken into account in establishing these values: availability of funding, time limitations, and the like. In this particular experiment, these were consciously ignored, and entered into the process only in as much as they were present in the psychological sets in the mind of the estimator, the Associate Director. Lack of confidence in the values reduces the potential of inference from this study to the wider area of all special libraries, but does not affect demonstration of the method.

7. Data Analysis. Analysis of the data gathered in the second questionnaire is aimed at determining effectiveness measures for the alternatives for change in influential aspects of library operation. These measures should be in a form compatible with input requirements of the GERT network computer program. They should reflect the opinions of the users in the sample.

In the experiment of Chapter IV, only the positive "yes" responses were used. This implied that the values signifying approval of the alternatives could be considered as measures of preference by the users for the alternatives

if actually realized. This might not be true. If a particular alternative were actually put into practice, it is possible that the users might have a higher or lower opinion of it than they anticipated at the time of the query. The measure, however, determined at this point in the method will provide the library administrator with a series of "yes" and "no" percentages and the range of these will indicate a total opinion regarding the suggested change.

The values over all can provide him with information to help in deciding between the several alternatives. For example, if the overall response to the alternatives shows the majority of responses to be "no" values higher than "yes" values, he could assume that the users were satisfied with library operations as they are. On the other hand, if the majority of responses are "yes" responses higher than "no" responses, he might conclude that the users were not as well satisfied with library operations as they could be. In this latter case, it would be strongly recommended that the rest of the method be followed and the best strategy for change selected and effort made to put it into effect.

This analysis could also be helpful in determining whether a particular, contemplated change should be effected. If the contemplated change received an effectiveness measure

more strongly "no" than "yes," that change should be carefully considered before any action be taken to effect it.

Considering the "yes" and "no" responses to the second questionnaire in the experimental study, of the grouped alternatives (see Appendix I, Exhibits 6, 7, and 8, pages 145, 146, and 147) the only ones to receive greater "yes" than "no" values related to staff. The staff alternatives, further, were only more positive than negative in Phases II and III. (In Phase I none of the alternatives in the grouped responses received greater "yes" than "no" values.) This would indicate that the qualifications and training of staff are more important to the users during an actual use of the library, than other alternatives. Administrators, then, should give more attention to these alternatives than to others if they wish to satisfy users.

When the individual alternative responses are looked at (Appendix I, Exhibits 9, 10 and 11, pages 148, 149 and 150), in Phase I only three received greater "yes" values than "no" values. These are: A-1, provide a current awareness service for the users (.63); C-4, allow free Xeroxing (.60); and D-6, increase the size of the library (.58). It is interesting to note that staff alternatives are not included. Looking at the probabilities that these alternatives will be put into operation, it is clear that only A-1 has a good chance, with a probability of 80%. This

alternative also received the greatest "yes" value of the three. The other two have probabilities of 0.5% and 1% respectively.

In Phase II, four alternatives received greater "yes" than "no" values: A-1 (.59), A-9 (.53), B-1 (.53), and B-2 (.60). In this case, the alternative receiving the highest "yes" value was B-2: provide ongoing training program for staff. The administration of the library is encouraged by this to consider the two staff alternatives and two related to collection and services: A-1, provide a current awareness service to users, and A-9, buy duplicate issues of journals keeping one in mint condition for binding. Probability that a current awareness service could be provided is 80%, buying duplicate issues of journals 10%.

In Phase III, three alternatives are suggested for attention by the "yes" responses: A-9, buy duplicate issues of journals and keep one in mint condition for binding (.55); B-1, hire a professional librarian and technicians for assistants (.52); and B-2, provide an ongoing training program for the staff (.57). Of these the last has the highest value. Alternatives common to both Phase II and Phase III have the following probabilities for realization: B-1, 5% if the library stays where it is and 60% if it is moved to the Physical Sciences Building; B-2, 10%; and A-9, 10%. If the administration wishes to concentrate on

these latter two phases, the hiring of professional staff after moving the library is an option since the users have not expressed that location of facilities has any influence on them for these phases.

If the primary purpose for changing library operations is to encourage non-users and occasional users to increase their use, it would seem that Phase I would be the most important. In this instance there should be a form of current awareness instituted which will inform users and potential users of the new materials as they are received in the library. (This received the greatest "yes" value and the highest probability for being instituted.)

If the purpose of alteration is to provide more service to those who already use the library, it would behoove the administration to institute an ongoing training program for staff members to upgrade them to a more closely professional level. This alternative had the highest value of "yes" response in Phases II and III.

These two separate alternatives, although derived from data gathered for Phase I and the other two phases respectively, could form a single strategy. In Phase II the alternative suggesting training for staff was positively emphasized along with the alternative suggesting current awareness service. If both alternatives are

instituted, it would appear that a stronger encouragement to library use would result. It seems logical to suppose, too, that a better current awareness service could be performed by better trained staff. Therefore the two alternatives being combined into one strategy would be complementary. This analysis, based on the results of the second questionnaire, supports the analysis performed using the GERT network.

In this experiment, the percentage of higher "no" responses was greater than higher "yes" responses for all alternatives. From this it could be suggested that the users are pretty well satisfied with things as they are.

Turning to the output from the GERT network GEN1 computer Program (Appendix III, 4,a, pages 185-86), other suggestions can be derived. Considering the output from the first run of the GERT computer program, GEN1, the groups which produce the highest value (1.562) for Rho, the effectiveness measure, are:

Path 1-4-9-12-15-18-21 (Page 186)

PHASE I	PHASE II	PHASE III
Staff	Staff	Staff

It would appear, then, that aspects of library operation related to staff are the most important for attention by administration. In the first questionnaire the aspects of library operation selected for this group were:

Age and Maturity
Attitudes
Dress and Deportment
Length of Service
Number
Qualifications
Sex
Work Schedules

Analysis of the responses to the first questionnaire indicated that the most influential of these aspects of the staff grouping were as follows:

PHASE I	PHASE II	PHASE III
Attitudes (ranked 7)	Attitudes (ranked 6)	Attitudes (ranked 7)
Qualifications (ranked 15)	Qualifications (ranked 9)	Qualifications (ranked 9)

These rankings were not the highest among all the aspects of library operation considered. However, they were sufficiently high to allow selection of alternatives related to them and to be continued in the study. Subsequent response by the users elevated them to a higher demand for attention by library administration. When subjected to the GERT analysis, Network RHO2 (See Figure 8, Page 86), the best strategy was to provide an ongoing training program for the staff (Rho_{max}=1.650, Appendix III, 4,b, page 189). As far as the application of the method is concerned this would be sufficient. But further analysis can be made of outputs from the experimental study.

In the results of the GERT computer program for Network RHO2 (Figure 8), there is a discrepancy between the path

(1-2-8-3-4-9-5-6-10-7) having the greatest value (.133) for P and the path (1-3-5-7) having the greatest value (1.562) for Rho (See Appendix III, 4,b, page 189). In other words the strategy with the highest probability for realization is not the same as the strategy with the highest measure of effectiveness for the users. Here then, is an example of diverging views between the library administration and the users. This divergence, indicated by the GERT output, suggests that there be some negotiation between the administration of the library and the users. At least, before any effort is made to realize the strategy with the high probability there should be some educational or public relations program mounted to provide the users of the Physics Library with the values to be realized from such a strategy.

The strategy in question here is that related to moving the library to the Physical Sciences Building and hiring professional staff. The result should not be surprising. Certainly the library administration would be much more likely to hire professional personnel if the library were moved and combined with two other subject collections. The larger user population and the larger collection resulting from such a move would justify increasing staff qualifications and abilities. But the members of the Physics Department faculty, the users in this study, did

Age and Maturity
Attitudes
Dress and Deportment
Length of Service
Number
Qualifications
Sex
Work Schedules

Analysis of the responses to the first questionnaire indicated that the most influential of these aspects of the staff grouping were as follows:

PHASE I	PHASE II	PHASE III
Attitudes (ranked 7)	Attitudes (ranked 6)	Attitudes (ranked 7)
Qualifications (ranked 15)	Qualifications (ranked 9)	Qualifications (ranked 9)

These rankings were not the highest among all the aspects of library operation considered. However, they were sufficiently high to allow selection of alternatives related to them and to be continued in the study. Subsequent response by the users elevated them to a higher demand for attention by library administration. When subjected to the GERT analysis, Network RHO2 (See Figure 8, Page 86), the best strategy was to provide an ongoing training program for the staff (Rho_{max}=1.650, Appendix III, 4,b, page 189). As far as the application of the method is concerned this would be sufficient. But further analysis can be made of outputs from the experimental study.

In the results of the GERT computer program for Network RHO2 (Figure 8), there is a discrepancy between the path

(1-2-8-3-4-9-5-6-10-7) having the greatest value (.133) for P and the path (1-3-5-7) having the greatest value (1.562) for Rho (See Appendix III, 4,b, page 189). In other words the strategy with the highest probability for realization is not the same as the strategy with the highest measure of effectiveness for the users. Here then, is an example of diverging views between the library administration a[illegible]rs. This divergence, indicated by the GERT [illegible]at there be some negotiation betw[illegible] of the library and the users. A[illegible]t is made to realize the strat[illegible]lity there should be some educa[illegible]ons program mounted to provide the u[illegible]s Library with the values to be realized fro[illegible] a strategy.

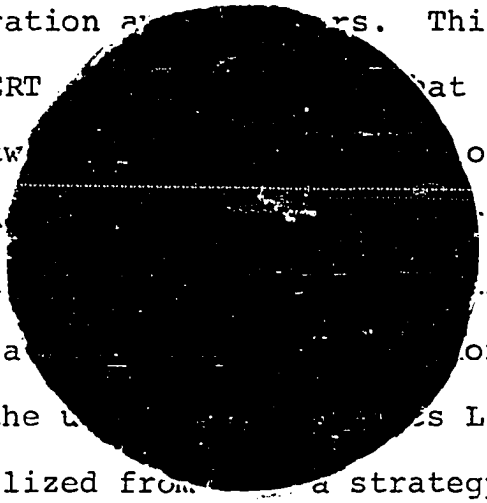

The strategy in question here is that related to moving the library to the Physical Sciences Building and hiring professional staff. The result should not be surprising. Certainly the library administration would be much more likely to hire professional personnel if the library were moved and combined with two other subject collections. The larger user population and the larger collection resulting from such a move would justify increasing staff qualifications and abilities. But the members of the Physics Department faculty, the users in this study, did

not want to have the library moved. Their responses in Phase I of the second questionnaire (see Appendix I, Exhibits 9, Alternative D-4, page 148) where this alternative was suggested were: "yes" 10%; "no" 90%. (Since Phases II and III involved the user in activities after going to the library, it is obvious why the location of the library is non-influential in these two latter phases.)

The fact that there was a 10% "yes" response, however, indicated that the users were not absolutely against the idea of a move. There is some encouragement, then, for the library administration to enter into negotiations to increase this percentage or perhaps to lower the applied probability that the move would take place.

In this analysis a further condition was not considered. The effectiveness measure for moving the library was applied without reference to the probability that the whole Physics Department would be moved to the Physical Sciences Building. As an example, then, of increasing the effectiveness for a particular alternative, this further condition could be made clear to the users. Subsequent investigation indicated that there was a small probability that the department would be moved. The inclusion of the resulting joint probability for moving the library and moving the department would have reduced the divergence between the two paths in question.

In the application of the method it might not be necessary to make use of the GERT computer program. It is possible that it could be excluded if the network were sufficiently simple, such as the one in this study labelled RHO2. In this instance the total number of paths through the network is small enough to allow manual computation. For any path through the network, that is, any particular strategy, the final probability for realization is the product of all probabilities attached to the branches. The final measure of effectiveness is the sum of all branch effectiveness measures included in that path.

A further possibility is evident if unlimited capital were available, which would make the probabilities for each alternative 100%. It would then be possible to perform this analysis manually: the effectiveness measure would be added for each strategy, or any program for total enumeration could be performed to provide effectiveness measures for all strategies. This could be done for responses from each user and a distribution of values for each strategy across the sample of users would indicate a confidence level for the final effectiveness value.

8. Conclusion and Recommendations. The method described in Chapter III has been used to determine a measure of effectiveness for possible alterations in the operations of the Physics Department Library at the

University of Oklahoma. To put a numerical value on the effectiveness of feasible alternatives for change, the opinion of users plus the realization probability given by the library administration have been combined. The advantage to be found in performing this combination in an evaluation procedure is that neither the users nor the administration will be in a position of conflict of interest. With this combination the resulting values determined for effectiveness will necessarily include both sides. If any change is made, the manager can have confidence that the views of all concerned will have been included in the planning. This should allow a change to be effected with a minimum of opposition.

When attempting to draw inferences from the results obtained from the sample data, one must be cognizant of data limitations. For example, the probabilities assigned to the realization of particular alternatives were estimated subjectively by the Associate Director of the University Libraries and were not verified by actual budgetary amounts, the other members of the library administration or the University administrators. Consequently, at the time the study was done, a lack of available funds meant that any alterations having a dollar cost associated with them would have a zero probability. However, the data do provide realistic inputs for

illustrative purposes.

Because of the subjective nature of the probabilities used, the effectiveness measure, Rho_{max}, was used to establish the best strategy. Thus the GERT technique has the flexibility to approach the decision problem using whichever strategy has the strongest basis.

The application of the method to the Physics Department Library at the University of Oklahoma has shown that this method is one way to establish effectiveness measures for various alternatives in library operation. These effectiveness measures can be used in management decision-making for the library administration. In the case of the illustrative study reported herein the library administration could make a decision on aspects of library operation knowing that alterations involving staff capabilities were significant influences on the users. In addition, it is clear that whatever be done to alter library operations, improving the staff capabilities and providing information to the users on new materials received would have a positive effect on user's decisions to continue their individual use of the library throughout the various decision points of their interface with the library. Conversely, the high negative effectiveness measures (percentages assigned for the "no" responses in the second questionnaire) would be a caution to the

administration when considering alterations involving change of location. In the responses to this second questionnaire, those alternatives with effectiveness measures close to .50 could be considered as non-effective, that is, it would not bother the users much one way or the other if changes were effected in these areas.

The method presented here indicates which aspects of library operation should receive the most attention. In addition it offers a measure of effectiveness for feasible alterations in operating the library both for larger groupings of alternatives as well as for individual alternatives within the phases of the user/library interface. The method can help the library manager or evaluator to investigate the opinion of library users and to plan strategies based upon this opinion, but not to the exclusion of those responsible for library operation. Subjective biases on the part of both user and administrator can balance each other in a cooperative effort for improvement of library operations. The method can provide comparative measures of effectiveness for alterations contemplated for operation of the library without the cost of instituting these alterations.

This method for determining and quantifying user opinion could be applicable outside the field of library management. It could have applications in any enterprise where service

is offered and where that service is potentially affected either adversely or propitiously by change in operations of the organization performing it. The method will aid in identifying the positive or negative effects of change and provide a means to quantify the effects and plan appropriate strategies. In the field of library management, the method will be useful in allocation of resources to produce the highest effectiveness (positive) and increase the probability that users will continue through the whole process of their use of the library.

Although concentrated on a study of the users of a library, the interpretation of results and the subsequent alterations made might have similar positive effects on occasional users. If regular and occasional users are positively affected by strategies chosen from the application of this method, one might assume that non-users may be affected in a similar way and may be more apt to begin using the library when informed of the changes and how they were determined as effective. This could form the basis for a continuing study.

Future investigation could also be performed into areas considered outside the scope of this study. This analysis was performed to develop and test a method for determining a measure of effectiveness for alterations in influential aspects of library operation. No attention was given to

the effects of feedback in the user/library interface system. A future investigation could study the time-related effects of previous experiences in an interface situation on future uses of a library. It is possible that the Graphical Evaluation and Review Technique (GERT) could make a valuable contribution to the solution of problems including this factor utilizing its capabilities for solving network problems when feedback loops are present.

A logical extension of the method is the inclusion of cost and budgetary figures in development of a cost/effectiveness analysis. Cost elements might be combined in the method as measures of probability that a particular alternative for change in library operation would be realized. This way, they could be used directly in the GERT program and a series of cost/effectiveness coefficients developed for the strategies.

Difficult problems can be encountered in library systems management when attempting to quantify values related to benefits of service provided by libraries. The value of information provided by libraries to their users is exceedingly difficult to measure. User studies performed by various researchers and organizations have investigated materials used by library patrons. Saul Herner and Associates of Washington, D.C., as reported by various

issues of the National Science Foundation's Current Research and Development, have devoted much to such investigations, touching on the value of information problem. But so far no firm measure has been established nor a method to determine it developed.

In the study reported here no attention was devoted to the interdisciplinary emphasis in scientific investigations in recent years. For example, the members of the Physics Department faculty were not queried on their opinions of other subject collections and libraries available to them to gain some comparison. Some of them did mention during the interviews that they made use of the libraries for mathematics, chemistry, geology, or general science. In the same vein, some mention was also made of faculty from other disciplines who made use of the physics collection. The comparison between various opinions by physics faculty of other collections and of the physics collection by other scholars could form an extension to the present study. Such an investigation could prove helpful in evaluating the traditional branch library system concept used by many large university libraries.

Another factor that could be included in continuing studies might be the growth in the body of literature the scientist must confront in his research enterprise. Although no mention was made of this factor by the users in the present

study, even a casual perusal of the size of various services such as Chemical Abstracts witnesses to the growth of the body of literature in the field. In this regard, it is possible that the frustration experienced when confronted by an enormous amount of information could adversely affect the user of a library. This might be a partial explanation for the evident importance of oral communication in the transmittal of scientific information (reported by the Royal Society Scientific Information Congress of 1948 and confirmed later by such studies as the Auerback Corporation's DOD User-Needs Study of 1965 - reference 8). It could also form the basis for a strong negative response in some aspects of library operation in the application of the method developed here. Another related question which could be studied might deal with the use of oral transmittal of scientific information as a measure of a researcher's eminence. This could be included in a study of library effectiveness as a potential library service aimed at increasing the eminence of the population of users.

It is hoped that the investigation reported herein will be extended and amplified to contribute to solving further library problems.

REFERENCES AND BIBLIOGRAPHY

1. American Library Association. Statistics Coordinating Project. 1966. Library Statistics: A Handbook of Concepts, Definitions, and Terminology. Chicago, Ill.: American Library Association.

2. Anderson, J. W. "Improving the validity of comparative technical library statistics." Special Libraries, 58:697-702, December 1967.

3. Baker, Norman R. and Richard E. Nance. "Organizational analysis and simulation studies of university libraries: a methodological review." Information Storage and Retrieval, 5:153-68, February 1970.

4. _____. 1967. The Use of Simulation in Studying Information Storage and Retrieval Systems. Lafayette, Ind.: Purdue University Library Operations Research Project. National Technical Information Service (NTIS) PB-176 507.

5. Becker, Joseph and Robert M. Hayes. 1964. Information Storage and Retrieval: Tools, Elements, Theories. New York: John Wiley & Sons.

6. Bellomy, F. L. "Management planning for library systems development." Journal of Library Automation, 2:187-217, December 1969.

7. Berelson, Bernard. 1949. The Library's Public. New York: Columbia University Press.

8. Berul, Lawrence, et al. 1965. DOD User-Needs Study. Phase I, Vol. I & II, Philadelphia, Pa.: The Auerbach Corporation (Final Report). NTIS, AD-615 501 and AD-615 502.

9. Black, Stanley W. "Library Economics." Appendix F-2 in Libraries at Large, Douglas M. Knight, comp. 1969. New York: R. R. Bowker Company.

10. Bloomfield, Masse. "Cost characteristics of library service." Special Libraries, 58:686-91, December 1967.

11. Bolles, Shirley W. "The use of flow charts in analysis of library operations." Special Libraries, 58:95-8, February 1967.

12. Bower, Joseph L. "Systems analysis for social decisions." Computers and Automation, 19:38-42, March 1970. Also in Operations Research, 17:927-40, November 1969.

13. Burkhalter, B. R., editor. 1968. Case Studies in Systems Analysis in a University Library. New York: Scarecrow Press.

14. Chamis, Alice Yanosko. "The design of information systems: the use of systems analysis." Special Libraries, 60:21-31, January 1969.

15. Chapman, Edward A., Paul L. St. Pierre, and John Lubans, Jr. 1970. Library Systems Analysis Guidelines. New York: Wiley-Interscience.

16. Churchman, C. West, Russell L. Ackoff, and E. Leonard Arnoff. 1957. Introduction to Operations Research. New York: John Wiley & Sons.

17. Clarke, A. Bruce and Ralph L. Disney. 1970. Probability and Random Processes for Engineers and Scientists. New York: John Wiley & Sons, Inc.

18. Cohen, Burton J. 1971. Cost-Effective Information Systems. New York: American Management Association.

19. Coover, R. W. "User needs and their effect on information center administration: a review 1953-66." Special Libraries, 60:446-56, September 1969.

20. "Cost effectiveness and cost-benefit analysis; sessions report." (with abstracts). Operational Research Quarterly, Special Conference Issue, 21:37-44, June 1970.

21. Day, Melvin. "Factors in building an operational information program." Journal of Chemical Documentation, May 1967, p. 107-9.

22. Dillehay, B. H., et al. "Determining tomorrow's needs through today's requests -- an automated approach to interlibrary loans." (A. H. Robins, Richmond, Va.) Special Libraries, 61:238-43, May/June 1970.

23. Dinter, Heinz. "Design criteria for man-machine information transfer system." Proceedings of the Sixth Annual National Colloquium on Information Retrieval, Philadelphia, Pa., 1969, pp. 15-22.

24. Dougherty, R. M. and F. J. Heinritz. 1966. Scientific Management of Library Operations. New York: Scarecrow Press.

25. DuCharme, Wesley M. "Response bias explanation of conservative human inference." Journal of Experimental Psychology, 85:66-74, January 1970.

26. _____. A Review and Analysis of the Phenomenon of Conservatism in Human Inference. 1969. Houston, Texas: Rice University, Interdisciplinary Program in Applied Mathematics and Systems Theory, Systems No. 46-5.

27. Edwards, Allen L. 1971. Probability and Statistics. New York: Holt, Rinehart and Winston, Inc.

28. Edwards, Ward. 1966. Non-conservative Probabilistic Information Processing Systems. Ann Arbor, Michigan: Engineering Psychology Laboratory. NTIS, AD-647 092.

29. Emery, J. C. "Decision Models" (MIS optimization). Datamation, 16:32-6, September 1, and 59-61, September 15, 1970.

30. Ennis, Philip H. 1965. Adult Book Reading in the U.S., A Preliminary Report. Chicago, Ill.: National Opinion Research Center (no. 105).

31. _____. "Study of the use and users of recorded knowledge." In Intellectual Foundations of Library Education, Chicago, Ill.: University of Chicago Press, 1965. pp. 17-26.

32. Fazar, W. "Program planning and budgeting theory." Special Libraries, 60:423-33, September 1969.

33. Fearn, Robin A. C. and Jessica S. Melton. "An information center user study." Proceedings of the American Society for Information Science, 1969, Vol. 6, pp. 463-70.

34. Fields, David S. "Cost/effectiveness analysis." Operations Research, 14:515, May-June 1966.

35. Freeman, Monroe E. "Determining costs of information systems." Journal of Chemical Documentation, 7:101-6, May 1967.

36. Fussler, Herman H. 1948. Characteristics of the Research Literature Used by Chemists and Physicists in the United States. Ph.D. Dissertation. Chicago, Ill.: University of Chicago.

37. Fussler, Herman H. and J. L. Simon. 1969. Patterns in the Use of Books in Large Research Libraries. Chicago, Ill.: University of Chicago Press.

38. Gaines, Ervin J. "Large municipal library as a network." Library Quarterly, 39:41-51, January 1969.

39. Gettys, Charles and James Steiger. "Conditional dependence and the strategy of decomposition-recombination in automated decision systems." Unpublished research being conducted at the University of Oklahoma, Department of Psychology, Norman, Oklahoma, 1971.

40. Good, I. J. 1965. The Estimation of Probabilities: An Essay on Modern Bayesian Methods. Cambridge, Mass.: The M.I.T. Press (Research Monograph No. 35).

41. Greiner, Larry E., D. Paul Leitch and Louis B. Barnes. "Putting judgment back into decisions." Harvard Business Review, 48:59-67, March 1970.

42. Guilford, J. P. 1954. Psychometric Methods. New York: McGraw-Hill.

43. Gull, C. Dake. "Logical flow charts and other new techniques for the administration of libraries and information centers." Library Resources and Technical Services, 12:47-66, Winter 1968.

44. Hall, Robert W. "Cost-effectiveness for information storage and retrieval systems." Presented at the Fifth Annual Conference of the American Society for Information Science, 1968. (Abstract in Proceedings of ASIS, Vol. 5, p. 342).

45. Hare, Van Court, Jr. 1967. Systems Analysis: A Diagnostic Approach. New York: Harcourt, Brace and World, Inc.

46. Hayes, Robert M. "Library systems analysis." In Harvey, J. F., editor, 1966. Data Processing in Public and University Libraries. New York: Spartan, p. 5-20.

47. Head, R. V. "Elusive MIS." Datamation, 16:22-7, September 1, 1970.

48. _____. "Management information systems: 1970" Journal of Systems Management, 21:24-5, August 1970.

49. Heaps, H. S. and Thiel, L. H. "Optimum procedures for economic information retrieval." Information Storage and Retrieval, 6:137-53, June 1970.

50. Herner, Saul. "System design, evaluation and costing." Special Libraries, 58:576-84, October 1967.

51. Holst, W. "User-oriented information system, operational on a regional basis within Scandinavian countries." Information Storage and Retrieval, 6:101-25, June 1970.

52. Howell, William C. 1967. Some Principles for the Design of Decision Systems: A Review of Six Years of Research on a Command-Control System Simulation. Columbus, Ohio: Ohio State University Human Performance Research Center.

53. Jain, A. K. et al. "Statistical model of book use and its application to book storage problem." American Statistical Association Journal, 64:1211-24, December 1969.

54. Jestes, Edward M. "An example of systems analysis: locating a book in a reference room." Special Libraries, 59:722-28, November 1968.

55. Kaplan, L. "Information retrieval from the management point of view." College and Research Libraries, 31:169-73, May 1970.

56. Keith, N. R. "General evaluation model for an information storage and retrieval system." Journal of the American Society for Information Science, 21:237-9, July 1970.

57. Kent, Allen K. "Performance and cost of free text search systems." Information Storage and Retrieval, 6:73-7, May 1970.

57a. Kerlinger, Fred N. 1964. Foundations of Behavioral Research. New York: Holt, Rinehart & Winston, Inc.

58. King, D. W. and F. W. Lancaster. "Costs, performance and benefits of information systems." Proceedings of the American Society for Information Science, 1969, Vol. 6, pp. 501-5.

59. Knight, Donald Orlin. 1969. Application of GERT to Contingent Decisions, Ph.D. Dissertation. Tempe, Arizona: Arizona State University.

60. Korfhage, R. R. and T. G. DeLutis. "A Basis for time and cost evaluation of information systems." Proceedings of the Sixth Annual Colloquium on Information Retrieval, Philadelphia, Pa., 1969, pp. 293-326.

61. Kozumplik, William A. "Time and motion study of library operations." Special Libraries, 58:585-8, October 1967.

62. Kramer, Joseph. "How to survive in industry: cost justifying library services." Special Libraries, 62:487-9, November 1971.

63. Kriebel, Charles H. 1964. Statistical Decision Criteria in the Evaluation of Information System Performance. Pittsburgh, Pa.: Carnegie Institute of Technology, Graduate School of Industrial Administration.

64. Lamkin, Burton E. "System analysis in top management communication." Special Libraries, 58:90-4, February 1967.

65. Lazorick, Gerald J. 1970. Demand Models for Books In Library Circulation Systems. (Final Report). Buffalo, New York: State University of New York at Buffalo, School of Information and Library Studies. NTIS, PB-192 275.

66. Leimkuhler, F. F. "A literature search and file organization model." American Documentation, 19:131-6, April 1968.

67. _____. "Mathematical models for library systems analysis." Drexel Library Quarterly, 4:185-96, July 1968.

68. Leonard, Ruth S. 1970. Objectives for Special Libraries. New York: Special Libraries Association.

69. _____. 1969. Profiles of Special Libraries. New York: Special Libraries Association.

70. Libaw, Frieda. "A new, generalized model for information-transfer: a systems approach." (Opinion Paper) American Documentation, 20: 381-4, October 1969.

71. "Library Automation." A panel discussion chaired by Herbert Peress including panelists F. F. Leimkuhler, William Nugent, Robert Shishko, and Ralph Shoffner. In Proceedings of the Sixth Annual National Colloquium on Information Retrieval, Philadelpha, Pa., 1969.

72. Lister, W. C. 1967. Least Cost Decision Rules for the Selection of Library Materials for Compact Storage. (Ph.D. Dissertation.) Lafayette, Ind.: Purdue University. NTIS, PB-174 441.

73. Lowell, Mildred H. 1968. Management of Libraries and Information Centers. New York: Scarecrow Press.

74. Lutz, Raymond P. "Costing information services." Bulletin of the Medical Library Association, 59:254-61, April 1971.

75. Meise, Norman. "Analysis of selected problems in a library system." Bulletin of ORSA, 15:B55, Supp. 1, Spring 1967.

76. Meyer, Robert S. and G. N. Rostvold. 1969. The Library and the Economic Community: A Market Analysis of Information Needs of Business and Industry in the Communities of Pasadena and Pomona, California. Pasadena, California: The Authors.

77. Miller, Edward P. "An underlying rationale for evaluating a management information system." Unpublished paper presented in partial fulfillment of requirements for a seminar on Information Technology, March, 1971.

78. Miller, James C. "Conceptual models for determining information requirements." Proceedings of the Joint Computer Conference, 25:609-20, 1964.

79. Moore, Edythe. "Systems analysis: an overview." Special Libraries, 58:87-90, February 1967.

80. Morris, William T. 1968. Management Science: A Bayesian Introduction. Englewood Cliffs, N.J.: Prentice-Hall, Inc.

81. _____. "On the art of modeling." Management Science, 13:B707-17.

82. Morse, Philip M. 1968. Library Effectiveness: A Systems Approach. Cambridge, Mass.: M.I.T. Press.

83. _____. 1970. On Browsing: The Use of Search Theory in the Search for Information. Cambridge, Mass.: M.I.T. Technical Report. NTIS, AD-702, 920.

84. _____. "Probabilistic models for library operations." In Association of Research Libraries 63d meeting, January 1964, Minutes, pp. 9-18.

85. Nance, Richard E. 1968. Strategic Simulation of a Library/User/Funder System. (Ph.D. Dissertation) Lafayette, Ind.: Purdue University.

86. Newell, W. T. "Long range planning for library managers." PNLA Quarterly, 31:21-35, October 1966.

87. Newhouse, J. P. 1970. Libraries and the Other Triangle Under the Demand Curve. Santa Monica, California: RAND Corp. NTIS, AD-701 187.

88. Nightengale, Merlyn E. "An approach to decisions under uncertainty." In Industrial Engineering Research Bulletin No. 1, 1965. Tempe, Arizona: Arizona State University, pp. 19-26.

89. _____. "The Value Statement." Naval Research Logistics Quarterly, 17:507-14, December 1970.

90. North, Jeanne B. et al. 1967. Libraries and Industry: Background Study for Use by the National Advisory Council on Libraries. Washington, D.C.: The NACL.

91. Norton, John H. "Information systems: some basic considerations." Management Review, 58:2-8, September 1969.

92. An Operations Research and Systems Engineering Study of a University Library. Baltimore, Md.: John Hopkins University, Milton S. Eisenhower Library. December 1968. NTIS, PB-182 834.

93. Orne, Jerrold. "The place of standards in the new technology of information science." Special Libraries, 58:703-6, December 1967.

94. Parker, Thomas F. "The missing stream: operations management in libraries." Library Journal, 94:42-3, January 1, 1969.

95. Phillips, L. D. and Ward Edwards. "Conservatism in a probability inference task." Journal of Experimental Psychology, 72:346-57, 1966.

96. Pizer, Irwin H. and Alexander H. Caine. "Objective tests of library performance." Special Libraries, 59:704-11, November 1968.

97. "Practical library management." Wisconsin Library Bulletin, 64:1-23, January 1968.

98. Pratt, A. D. "Objectives and performance evaluation of information systems." Proceedings of the American Society for Information Science, 1968, Vol. 5, pp. 323-25.

99. Prest, A. R. and R. Turvey. "Cost-benefit analysis: a survey." Economic Journal, 75:683-735, December 1965.

100. Pritsker, A. Alan B. 1966. GERT: Graphical Evaluation and Review Technique. Santa Monica, Calif.: RAND Corp. NASA Memorandum RM-4972-NASA.

101. Public Library Association. Standards Committee. 1967. Minimum Standards for Public Library Systems, 1966. Chicago, Ill.: American Library Association.

102. Quade, E. S. and W. I. Boucher. 1968. Systems Analysis and Policy Planning: Applications in Defense. Santa Monica, Calif.: RAND Corp., Report R-439-PR, abridged.

103. Raffel, Jeffrey A. and Robert Shishko. 1969. Systematic Analysis of University Libraries: An Application of Cost-Benefit Analysis to the M.I.T. Libraries. Cambridge, Mass.: M.I.T. Press.

104. Raiffa, Howard and Robert Schlaifer. 1961. Applied Statistical Decision Theory. Boston, Mass.: Harvard University, Division of Research, Graduate School of Business Administration.

105. Randall, G. E. "Budgeting for a company library." Special Libraries, 58:166-72, March 1967.

106. Raphael, D. L. "The systems concept and the library." In Harlow, Neal. 1969. Administration and Change: Continuing Education in Library Administration. New Brunswick, N.J.: Rutgers University Press.

107. Reif, William E. 1966. The Effect of the Computer Upon Management Structure. Ph.D. Dissertation. Iowa City, Iowa: University of Iowa.

108. Robinson, F. et al. 1969. Systems Analysis in Libraries. London: Oriel Press (Symplegades No. 2).

109. Rohlf, R. H. "Fear of real costs; some financial aspects of the Public Library Association systems study." American Libraries, 1:242-4, March 1970.

110. Salverson, Carol A. "The relevance of statistics to library evaluation." College and Research Libraries, 30:352-61, July 1969.

111. Scheffler, Frederic L. I. 1970. User Appraisal and Cost Analysis of the Aerospace Materials. Dayton, Ohio: Dayton University Research Institute. NTIS, AD-707 143.

112. Schlaifer, Robert. 1969. Analysis of Decisions Under Uncertainty. New York: McGraw-Hill.

113. Schum, D. A., I. L. Goldstein and W. Howell. 1966. Subjective Probability Revisions Under Several Cost-Payoff Arrangements. Columbus, Ohio: Ohio State University Human Performance Center. NTIS, AD-697 881.

114. Siegel, Sidney. 1956. Nonparametric Statistics for the Behavioral Sciences. New York: McGraw-Hill.

115. Simon, B. "Need for administrative know-how in libraries." Bulletin of the Medical Library Association. 57:160-70, April 1969.

116. Simms, Daniel M. "What is a systems analyst?" Special Libraries, 59:718-21, November 1968.

117. Sinclair, J. M. "Basics of an information system." Office, 71:54-5, February 1970.

118. Slamecka, Vladimir. "Methods and research for design of information networks." Library Trends, 18:551-68, April 1970.

119. Sloane, Margaret N. "The validity of comparative technical library statistics." Special Libraries, 58:692-6, December 1967.

120. Slovic, Paul and Sarah Lichtenstein. 1971. Comparison of Bayesian and Regression Approaches to the Study of Information Processing in Judgment. Eugene, Oregon: Oregon Research Institute, Research Monograph no. 10:1, Second Revised Version.

121. Stevenson, C. G. "Checklist for review and evaluation of technical libraries." Special Libraries, 58:106-10, February 1967.

122. Streufert, Susan C. 1969. Effects of Information Relevance on Decision Making in Complex Environments. Lafayette, Ind.: Purdue University, Technical Report 34. NTIS, AD-701 933.

123. Study of effectiveness of public library service funded." American Libraries, 1:871-2, October 1970.

124. Surace, Cecily J. 1970. Library Circulation Systems: An Overview. Santa Monica, Calif.: RAND Corp., Report P-4338. NTIS, AD-703 282.

125. Swanson, Rowena W. "User-oriented information system." American Documentation, 20:279-80, (Brief Communication), July 1969.

126. Thomas, P. A. and H. East. "Comments on the terminology of the analysis of library systems and the functions of forms therein." Aslib Proceedings, 20:340-4, August 1968.

127. Thompson, John I. and Co., Washington, D.C. 1968. Criteria for Evaluating the Effectiveness of Library Operations. By C. J. Wessel et al. 3 vols. Washington, D.C.: National Technical Information Service, AD-649 468, AD-676 188, AD-682 758.

128. Thurstone, L. L. 1959. The Measurement of Values. Chicago, Ill.: University of Chicago Press.

129. Tom Keun Oh. "New dimensions of management theory." College and Research Libraries, 27:431-38, November 1966.

130. Trueswell, Richard W. 1968. Analysis of Library User Circulation Requirements. Amherst, Mass.: Massachusetts University, Department of Industrial Engineering. NTIS, PB-186 482.

131. Vincent, D. A. 1971. Modeling for Information Product Objectives. Pasadena, Calif.: California Institute of Technology, Jet Propulsion Laboratory. (NASA Tech Brief 71-10281, September 1971).

132. Wessel, C. J. "Criteria for evaluating technical library effectiveness." Aslib Proceedings, 20:455-81, November 1968.

133. Williams, Gordon et al. 1968. Library Costs Models: Owning Versus Borrowing Serial Publications. Bethesda, Md.: Westat Research, Inc. NTIS, PB-182 304.

134. Wills, Gordon and Martin Christopher. "Cost/benefit analysis of company information needs." Unesco Library Bulletin, XXIV:9-22, January-February 1970.

135. Wilson, A. G. "Use of the concept of entropy in system modeling." Operations Research Quarterly, 21:247-65, June 1970.

136. Yovits, M. C. "Information Service: toward the development of a true scientific discipline." American Documentation, 20:369-70, October 1969.

APPENDICES

Appendix I: Exhibits

Exhibit 1: Questionnaire to Determine Influence of Aspects

Exhibit 2: Aspect Rankings submitted by the Users-Phase I

3: Aspect Rankings submitted by the Users-Phase II

4. Aspect Rankings submitted by the Users-Phase III

Exhibit 5: Questionnaire to Determine Effectiveness Measures for Alternatives

Exhibit 6: Effectiveness Measures, Grouped Alternatives-Phase I

7: Effectiveness Measures, Grouped Alternatives-Phase II

8: Effectiveness Measures, Grouped Alternatives-Phase III

Exhibit 9: Effectiveness Measures, Individual Alternatives-Phase I

10: Effectiveness Measures, Individual Alternatives-Phase II

11: Effectiveness Measures, Individual Alternatives-Phase III

Appendix II; Computer Programs

Program 1: RANKORD - Program to perform comparative significance analysis (FORTRAN IV-G, Batch Mode)

Program 2: Program to rank, cumulate and normalize a series of numbers (BASIC, Time-share mode)

Program 3: Program to perform the Kolmogorov-Smirnov Goodness-of-Fit Test for Uniform and Normal Distributions (BASIC, Time-share mode)

APPENDIX III: Computer Outputs

1. RANKORD - Normalized relative significance values for Phases I, II, and III including matrix outputs and tests for consistency among the judges.

2. Normalized cumulative relative significance values, ranked, for Phases I, II, and III.

3. Kolmogorov-Smirnov Goodness-of-Fit Tests
   a. Alternatives Responses. Sample printout.
   b. Maximum Differences, Alternatives grouped and individual

4. GERT Networks Inputs and Outputs
   a. Grouped Alternatives (GEN 1)
   b. Alternatives for Rho_{max} from GEN 1 (RHO2)
   c. Alternatives for P_{max} from GEN 1 (C & S)
   d. GERT Input form

APPENDIX I: Exhibits

EXHIBIT 1

RANKING OF ASPECTS OF OPERATION OF THE PHYSICS LIBRARY — OCTOBER 1971

ASPECT		RANK & WEIGHT		
		I	II	III
Physical Facilities	Acoustics Arrangement of space Atmosphere Clutter/cleanliness Decor Furniture Lighting Location			
Collection	Arrangement of collection Bibliography and Indexing Services Classification schemes Currency of materials Microforms provided Retention policies			
Staff	Age and maturity of staff Attitudes Dress and deportment Length of service Number of staff Qualifications Sex Work schedules			
Policies	Circulation Open stack/closed stack Personal user habits Reproduction facilities			
	Hours of service			
Service	Current awareness File maintenance Periodical routing Searching, bibliography preparation			
OTHER				

Completed by:_____ Date:_____

For (User):_____

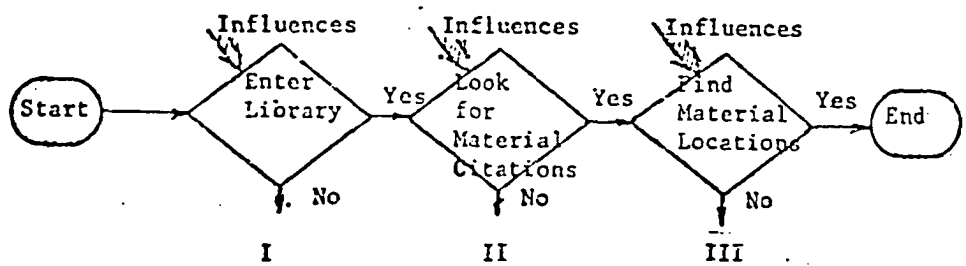

Interface Decision Points for Aspect Influence

PHASE 1

RANK ORDERINGS SUBMITTED BY THE JUDGES

	1	2	3	4	5	6	7	8	9	10	11	12	13	14	15	16	17	18	19	20	21	22	23	24	25	26	27	28	29	30	31	32	33
BASS	8	10	11	18	18	18	18	2	7	11	1	18	11	18	11	18	5	18	18	18	18	18	8	4	3	11	8	18	11	18	11	18	5
BOURASSA	19	27	18	24	19	23	13	1	19	10	4	13	3	10	9	24	19	27	24	27	13	27	27	10	1	13	4	28	3	13	7	7	27
BROUSSARD	16	21	15	9	28	24	21	6	21	1	1	28	3	6	16	6	6	24	6	16	6	20	28	16	16	20	13	28	13	24	6	24	3
BURRELL	15	9	9	15	15	9	9	1	1	9	7	15	3	15	15	15	9	15	15	15	7	15	15	4	15	15	9	15	5	15	15	15	15
CARROLL	14	20	6	19	29	23	4	6	14	18	10	23	4	29	20	23	8	23	23	22	10	23	16	2	1	29	13	29	10	16	10	10	3
DAY	29	17	19	19	7	7	7	7	19	25	4	19	4	27	11	27	12	15	15	12	1	30	15	4	19	15	1	19	7	1	30	25	12
FISCHBECK	1	23	25	18	25	24	23	1	18	1	1	18	1	25	1	1	1	25	18	18	1	25	16	1	1	1	1	25	15	17	25	25	1
FOLLER	6	14	7	10	14	12	11	4	12	14	21	21	5	17	21	7	1	4	17	17	21	21	17	21	1	7	21	1	21	21	21	21	21
HERZOG	19	19	19	19	19	19	19	7	15	7	7	7	16	19	1	12	2	19	19	19	19	19	19	2	2	7	2	33	6	12	18	12	16
HOWARD	5	12	17	21	21	17	5	1	17	12	12	21	3	21	21	21	5	1	21	12	5	21	17	5	5	5	12	21	21	21	21	21	4
HUGHES	15	14	14	19	18	18	12	18	16	12	11	9	1	4	4	18	18	18	18	18	18	18	18	18	1	18	4	15	1	4	19	4	9
HUFFAKER	11	4	5	11	22	5	22	5	11	5	2	11	22	22	5	20	11	22	22	22	11	22	11	5	3	11	11	22	22	22	22	20	1
KANTOWSKI	16	16	16	16	16	16	16	3	16	7	4	16	1	9	9	16	9	16	16	16	16	16	8	14	2	9	4	16	4	16	16	9	14
PETRY	10	18	18	13	18	18	18	12	18	12	1	18	4	7	12	18	12	18	16	17	6	33	4	7	2	18	7	18	2	10	10	7	7
SHAY	22	13	13	20	5	9	9	20	1	1	6	1	1	22	1	22	16	18	12	22	22	22	22	13	13	22	7	22	22	13	22	22	7
SIKORA	5	3	14	14	12	5	5	3	19	5	19	19	1	23	12	23	14	23	23	23	23	23	23	19	1	14	23	23	5	14	5	23	5
ST.JOHN	18	11	11	4	11	7	4	1	11	16	4	25	1	25	16	21	19	25	25	25	19	25	25	25	7	10	7	1	21	21	25	21	11
WHITMORE	9	17	17	11	23	23	11	2	15	7	6	23	1	23	7	17	2	17	23	23	2	23	17	11	2	17	15	23	11	23	9	23	23
SALOMON	3	3	3	20	26	20	3	32	3	3	3	3	1	3	3	26	23	26	26	26	26	26	23	3	3	3	1	32	3	3	3	3	23

EXHIBIT 2

PHASE 2

RANK ORDERINGS SUBMITTED BY THE JUDGES

	1	2	3	4	5	6	7	8	9	10	11	12	13	14	15	16	17	18	19	20	21	22	23	24	25	26	27	28	29	30	31	32	33
BASS	8	10	11	18	10	14	19	2	7	11	1	18	11	18	11	10	5	10	18	18	18	18	8	4	3	11	9	16	11	18	11	10	5
BUONASSA	22	26	17	22	20	28	13	25	26	10	1	13	3	10	6	10	6	28	22	10	6	25	13	6	10	10	2	24	3	16	13	3	26
BRUENSMA	12	12	15	9	24	21	16	21	17	1	1	20	3	6	16	6	6	24	6	16	6	26	28	16	16	26	29	25	21	24	6	24	3
BURRELL	10	10	4	17	23	17	4	22	1	4	4	22	2	22	10	10	10	17	22	22	10	22	17	4	3	22	22	22	10	17	22	22	4
CARROLL	12	19	7	17	24	23	3	28	12	16	7	17	3	28	19	23	6	23	23	19	7	23	12	3	2	22	7	26	11	12	26	20	1
DAY	27	17	17	9	23	23	14	20	15	12	1	12	5	26	5	23	8	17	17	17	1	28	9	28	9	17	23	28	5	1	28	15	1
FISCHELLA	1	23	25	15	25	24	22	25	16	1	1	10	1	25	1	1	1	25	18	18	1	25	16	1	1	1	1	25	14	17	25	25	1
FULLER	9	20	11	16	23	16	9	23	11	20	6	1	6	23	20	16	6	11	1	23	23	29	23	1	1	16	29	1	29	11	29	15	29
HERZEG	22	22	28	22	22	22	13	22	22	1	1	1	20	20	13	8	1	22	8	8	13	22	13	8	1	22	13	33	7	1	19	13	8
HUARD	3	15	5	21	21	5	5	21	10	5	5	21	1	18	18	21	5	31	31	5	1	21	21	5	5	5	16	21	21	21	21	16	4
HOWES	15	15	15	19	19	19	12	19	15	12	1	14	1	6	6	19	6	19	15	19	6	19	19	19	6	19	19	19	1	1	19	1	11
HUFFAKER	7	7	11	11	11	11	4	11	11	3	2	6	11	11	7	11	11	11	11	11	11	11	11	11	4	7	11	11	11	11	11	11	1
KANTOWSKI	13	13	13	7	19	13	7	18	18	7	1	7	18	18	2	3	3	18	3	18	3	18	7	18	7	18	18	18	18	18	18	18	13
PETRY	18	18	12	18	18	18	18	32	18	5	2	12	4	9	5	19	9	18	12	16	8	32	9	18	2	18	5	18	16	12	18	12	1
SHAY	19	9	9	17	19	19	13	17	1	1	1	1	1	13	1	19	13	19	19	19	9	19	19	19	12	19	19	19	13	1	19	19	1
SIKORA	5	3	22	22	19	14	5	14	19	4	5	5	1	14	5	22	22	22	5	22	13	22	22	14	1	22	22	22	5	19	22	14	5
ST.JOHN	7	7	7	7	7	7	7	7	7	7	1	7	7	7	7	7	7	7	7	7	4	7	4	7	3	7	7	1	7	7	7	7	6
WHITMORE	7	18	13	13	19	18	9	18	11	13	3	18	1	18	4	12	4	11	18	18	5	18	18	18	2	13	18	18	4	18	7	18	18
SALMON	11	5	5	5	11	11	11	11	5	2	2	11	2	11	25	11	11	25	25	25	11	30	11	11	1	11	5	33	5	11	30	30	29

PHASE 3

RANK ORDERINGS SUBMITTED BY THE JUDGES

	1	2	3	4	5	6	7	8	9	10	11	12	13	14	15	16	17	18	19	20	21	22	23	24	25	26	27	28	29	30	31	32	33
BARD	15	19	15	15	15	12	12	12	6	1	1	10	6	6	4	15	15	15	15	15	15	15	10	6	4	15	15	19	15	15	15	15	1
BOURASSA	19	19	19	19	26	26	13	8	16	1	13	5	13	9	26	19	5	26	19	13	5	25	1	1	13	13	26	26	1	26	11	26	11
BROERSMA	12	12	15	6	24	21	16	21	12	1	1	28	4	7	16	7	7	24	7	16	3	28	28	16	16	28	29	28	21	24	7	24	4
BURNELL	11	11	11	11	11	11	9	9	6	6	11	11	1	11	1	11	11	11	11	11	11	11	11	3	3	11	8	11	11	11	11	11	5
CARROLL	23	23	23	23	23	16	12	23	23	12	4	14	2	16	16	16	7	16	16	14	5	18	3	7	6	23	23	23	10	11	23	9	1
DAY	25	18	18	14	22	22	14	9	9	5	1	5	5	26	5	26	9	21	22	20	1	26	17	26	9	26	26	26	9	1	26	16	1
FISCHLECK	1	16	21	13	21	20	16	21	21	21	21	21	1	21	1	1	1	21	16	16	1	21	13	1	1	1	1	21	12	15	21	21	1
FOLLER	11	20	13	16	23	15	9	23	15	20	29	1	1	23	9	29	13	18	1	23	23	29	23	1	1	20	1	1	29	11	29	15	1
HERCZEG	22	22	13	5	13	4	5	22	17	5	18	5	18	5	1	13	13	22	22	22	22	22	22	5	1	5	1	33	18	18	22	22	5
HOWARD	17	17	17	15	17	17	8	17	17	3	3	17	1	8	16	17	8	17	17	8	1	17	17	8	8	3	3	17	17	17	17	8	7
HUNES	19	14	19	19	19	19	19	14	13	1	16	16	1	1	1	19	9	19	19	19	9	19	19	1	1	19	12	19	1	1	19	18	9
HUFFAKER	7	8	8	8	8	8	8	8	8	4	2	8	5	8	3	8	8	8	8	8	8	8	8	8	5	8	8	8	8	8	8	8	1
KANTOWSKI	21	10	21	10	21	10	8	24	15	1	24	8	1	10	5	15	15	24	15	15	10	24	15	1	4	5	24	24	24	24	24	24	5
PETRY	20	5	26	14	20	20	14	31	14	2	31	8	4	8	5	20	9	20	14	18	7	31	8	13	2	20	20	20	20	8	20	18	1
SHAY	17	14	17	17	17	17	16	17	1	1	1	1	1	1	1	17	14	17	17	17	1	17	17	17	1	17	1	17	1	1	17	17	1
SIKORA	11	3	19	19	15	19	15	11	19	4	4	6	1	15	6	19	19	19	6	19	19	19	19	11	2	19	6	19	15	19	19	11	6
ST.JOHN	13	9	13	13	13	13	10	13	13	12	1	13	1	13	13	13	13	13	13	13	11	13	4	13	4	13	4	1	13	13	13	13	4
WHITMORE	2	15	15	10	19	8	6	23	15	6	19	23	1	10	8	19	10	18	23	22	23	23	23	2	2	10	19	23	23	23	10	23	2
SALMON	5	5	5	5	20	20	5	5	5	2	2	13	2	13	13	13	13	26	26	26	20	25	20	13	1	13	20	33	5	20	31	31	26

EXHIBIT 4

EXHIBIT 5

UTILITY DETERMINATION

OPERATIONAL ALTERNATIVES FOR PHYSICS DEPARTMENT LIBRARY

Introduction

The following questionnaire is intended to find the value to you of various feasible alternatives in operation of the departmental library.

There is no implication that any of these alternatives will actually be effected nor are being considered seriously for implementation at this time. They are, however, feasible for such consideration from the standpoint of library practice.

Instructions

There are four groups of alternatives with varying numbers of alternatives in each group. These have been selected from the basis of our first interview identifying those aspects of library operation which are most influential on the Faculty users in making decisions at each of three decision points in a library/user interface. The three decision points are the same three phases used in our earlier interview (see bottom of appended answer sheet.)

Under each group heading are the alternatives which apply to that particular grouping.

Benefits (+ve and -ve) are suggested to help you decide the value of a specific alternative. These are not exhaustive but only suggestive. Your own consideration of benefits and liabilities for particular alternatives will determine the positive and negative value for you.

For each alternative, the answer sheet provides space for 'Yes' and 'No' proportions at each of the three phases (except in some cases where the particular alternative was not considered as significant influence for a particular phase.)

Please allot a proportion (in %) of 'Yes' and 'No' in each box of the answer sheet to show the value to you of having an alteration made in library operation relative to that alternative, at that phase. 'Yes' plus 'No' percentage for each alternative will sum to 100% for each phase.

As an example, answer for Alternative A.3. might be

"Add indexing and abstract services

Yes	No	Yes	No	Yes	No
55	45	80	20	60	40

This indicates that the respondent would be willing to 'buy' this alteration as an aid to his decision making in all three phases, but that it is not worth 100% of whatever it might actually cost. Differences between the three phases indicate the varying value depending on the actual interface experience.

Appended to the basic questionnaire, in addition to the answer sheet provided for your convenience, is a brief questionnaire intended to show current use of the library.

The questionnaire should not take more than 15 to 30 minutes to complete. Please return it to me at your earliest convenience in the self addressed, stamped envelope provided.

Thank you,

Edward P. Miller

Edward P. Miller, Library Systems Management Program

UTILITY DETERMINATION

OPERATIONAL ALTERNATIVES FOR PHYSICS DEPARTMENT LIBRARY

Alternatives	Benefits (+ve & -ve)
A. Collection and Services	
1. Current awareness on new materials received in library providing list to faculty each week.	You will know within one week what new items are received, but this will take staff time.
2. Shorten processing time by reducing amount of cataloging, marking, subject entry cards, etc.	New materials will be handled more quickly, but errors and other shortcomings will be experienced, fewer subject headings, and less identification provided for each item.
3. Add more indexing and abstracting services.	More access will be given, but many journals indexed will not be available in the Library.
4. Combine all index services in a central place in the Bizzell Memorial Library.	Access will be possible to all journals in the whole library system in one place, but you will have to go to the Bizzell Library.
5. Shelve materials by size. (Three size categories.)	Space will be saved to add more items, but subjects will be shelved in more than one place.
6. Intershelve journals and books.	Subjects will be collected in one location, but journals will be with their subject locations.
7. Retain unbound journals for maximum of 5 years, then bind and store in Bizzell Memorial Library.	You will have ready access to current (5 years) materials, but there is liability for issues to be missing, dog-eared, and ultimately longer in the binding process; and older issues will not be held in the Physics Library.
8. Buy journals on microfilm, hold unbound issues until microfilm received, the discard them.	Journal material will be readily available, but after one to two years only on microfilm.
9. Buy duplicate issues of journals and keep one in mint condition for binding.	Journal material will always be available, but it will require more space and money.
B. Staff	
1. Hire only professional librarian and technicians for assistants.	Full professional service will be given, but user will do less of his own searching, etc., and costs will increase.
2. Maintain ongoing training program for staff.	Approach to professional service, but will need time and support for staff to take training.

Alternative	Benefits (+ve & -ve)
C. Policies	
1. Stricter circulation policies restricting use to library room only, except for special cases.	Materials will always be available, but only for use in the library.
2. Closed stacks except for special permit holders.	Materials will only be available through service by staff. Permits will be issued only for each specific use and will prove bothersome.
3. Stricter policies on user behavior: no smoking, eating, drinking, or talking.	Library will be cleaner, less smelly, but some use will be interrupted for thirst, hunger, nicotine fits, and/or conversation.
4. Free Xeroxing for any user with no restrictions on use of the machine.	It will be easier to get copies and cheaper, but there will be more machine breakdowns.
D. Physical Facilities	
1. Reduce noise levels with accoustical materials to absorb sounds.	Library will be quieter even with talking, but service will be disrupted for the alterations.
2. Rearrange furniture and space allocated for office, shelves and study tables.	Study tables will be closer to materials and staff work area separated from materials, but service will be disrupted for the change and materials separated by study areas.
3. Add more lighting.	Brighter lighting will be provided in stack and study areas, but cost will increase.
4. Move the library to the Physical Sciences Building and combine with Mathematics and Chemistry.	Cross discipline materials will be in one place but a block away from the Physics Building.
5. Move Physics collection to Bizzell Memorial Library and combine with science materials.	All cross discipline materials will be together but outside of the Physics Building.
6. Increase size of the Library.	More space will be provided, but it will cause disruption of service and increase costs.
7. Decrease size of the Library.	Less space could mean more specialized selection of materials but fewer materials being held.

ANSWER SHEET

OPERATIONAL ALTERNATIVES FOR PHYSICS DEPARTMENT LIBRARY

Alternatives	Phase I		Phase II		Phase III	
A. Collection and Services	Yes	No	Yes	No	Yes	No
1. Current awareness on new materials					X	X
2. Shorten processing time						
3. Add indexing and abstract services						
4. Combine indexes in Bizzell Library						
5. Shelve materials by size						
6. Intershelve journals and books						
7. Retain unbound journals 5 years						
8. Buy microfilm, no bound journals						
9. Buy duplicate copies for binding						
B. Staff						
1. Hire only professional librarian						
2. Maintain regular staff training						
C. Policies						
1. Strict circulation						
2. Closed stacks						
3. No smoking, eating, drinking, talking			X		X	
4. Free, self-operated Xerox machine					X	
D. Physical Facilities						
1. Lower noise levels			X			X
2. Rearrange furniture						
3. Add more lighting						
4. Move Library to Physical Sciences				X		
5. Move to Bizzell Memorial Library						
6. Increase size						
7. Decrease size						

Name: _____ Date: _____

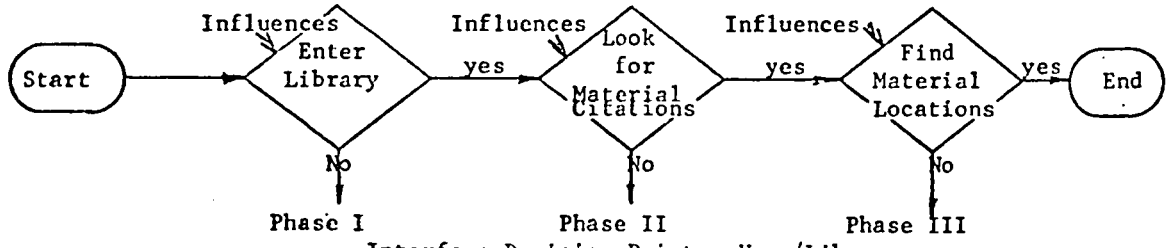

Interface Decision Points: User/Library

EXHIBIT 6

Grouped Responses to Second Questionnaire: PHASE I

Group	A		B		C		D	
User	Yes	No	Yes	No	Yes	No	Yes	No
1	.356	.644	.60	.40	.29	.71	.24	.76
2	.111	.889	.05	.95	.20	.80	.157	.843
3	.467	.533	1.00	0.0	.625	.375	.54	.46
4	.40	.60	.50	.50	.50	.50	.37	.63
5	.522	.478	.575	.425	.40	.60	.37	.63
6	.111	.889	.40	.60	.275	.725	.086	.914
7	.111	.889	.75	.25	.25	.75	.286	.714
8	.522	.478	.50	.50	.45	.55	.557	.443
9	.39	.61	.10	.90	.325	.675	.443	.557
10	.507	.493	.50	.50	.50	.50	.44	.56
11	.067	.933	.65	.35	.25	.75	.07	.93
12	.533	.467	.50	.50	.275	.725	.357	.643
13	.467	.533	.55	.45	.625	.375	.43	.57
14	.50	.50	.10	.90	.50	.50	.15	.85
15	.278	.722	0.0	1.00	.25	.75	.143	.857
Mean	.356	.644	.452	.548	.381	.619	.309	.691
Std. Dev.	.169	.169	.271	.271	.138	.138	.155	.155
Distr. Fn.	U	U	U	U	J	U	U	U

Group A = Collection and Services
Group B = Staff
Group C = Policies
Group D = Physical Facilities

EXHIBIT 7

Grouped Responses to Second Questionnaire: PHASE II

Group	A		B		C	
User	Yes	No	Yes	No	Yes	No
1	.378	.622	.60	.40	.217	.783
2	.133	.867	.30	.70	0.0	1.00
3	.54	.46	1.00	0.0	.50	.50
4	.55	.45	.55	.45	.567	.433
5	.444	.556	.575	.425	.483	.517
6	.10	.90	.40	.60	.167	.833
7	.167	.833	.75	.25	.333	.667
8	.467	.533	.65	.35	.40	.60
9	.325	.675	.30	.70	.007	.933
10	.50	.50	.575	.425	.467	.533
11	.111	.889	.65	.35	.267	.733
12	.50	.50	.50	.50	.20	.80
13	.433	.567	.65	.35	.50	.50
14	.50	.50	.50	.50	.033	.967
15	.278	.722	.50	.50	.167	.833
Mean	.362	.638	.567	.433	.291	.709
Std. Dev.	.159	.159	.169	.169	.181	.181
Distr. Fn.	U	U	U	U	NO	NO

Group A = Collection and Services
Group B = Staff
Group C = Policies
(Physical Facilities was non-influential in this Phase)

EXHIBIT 8

Grouped Responses to Second Questionnaire: PHASE III

Group	A		B		C	
User	Yes	No	Yes	No	Yes	No
1	.433	.567	.70	.30	.05	.95
2	.05	.95	.20	.80	0.0	1.00
3	.54	.46	1.00	0.0	.50	.50
4	.488	.513	.55	.45	.60	.40
5	.494	.506	.625	.375	.55	.45
6	.088	.913	.40	.40	.15	.85
7	.125	.875	.75	.25	0.0	1.00
8	.413	.588	.65	.35	.40	.60
9	.10	.90	.30	.70	.50	.50
10	.431	.569	.525	.475	.20	.80
11	.063	.937	.65	.35	.35	.65
12	.475	.525	.50	.50	.05	.95
13	.444	.556	.60	.40	.50	.50
14	.167	.843	.20	.80	.40	.60
15	.188	.812	.50	.50	0.0	1.00
Mean	.30	.70	.543	.457	.283	.717
Std. Dev.	.182	.182	.205	.205	.219	.219
Distr. Fn.	NO	NO	U	U	NO	NO

Group A = Collection and Services
Group B = Staff
Group C = Policies
(Physical Facilities was non-influential in this Phase)

PHASE I (All values scaled by 10)

	A:Collection & Services																		B:Staff				C:Policies								D:Physical Facilities													
	1		2		3		4		5		6		7		8		9		1		2		1		2		3		4		1		2		3		4		5		6		7	
	+	-	+	-	+	-	+	-	+	-	+	-	+	-	+	-	+	-	+	-	+	-	+	-	+	-	+	-	+	-	+	-	+	-	+	-	+	-	+	-	+	-	+	-
1	6	4	3	7	5	5	0	10	4	6	3	7	2	8	0	10	9	1	5	5	7	3	1	9	.5	9.5	5	5	5	5	5	5	5	5	5	5	0	10	0	10	2	8	0	10
2	6	4	0	10	2	8	0	10	0	10	0	10	0	10	0	10	2	8	1	9	0	10	0	10	0	10	6	4	2	8	0	10	0	10	5	5	0	10	0	10	6	4	0	10
3	7	3	6	4	7	3	2	8	2	8	8	2	3	7	3	7	4	6	10	0	10	0	9	1	1	9	10	0	5	5	8	2	8	2	7	3	5	5	1	9	9	1	0	10
4	8	2	5	5	6	4	2	8	1	9	1	9	5	5	3	7	5	5	5	5	5	5	5	5	5	5	5	5	5	5	5	5	5	5	5	5	1	9	1	9	6	4	3	7
5	7	3	5	5	5	5	5	5	5	5	4	6	5	5	5	5	6	4	6	4	3.5	4.5	3	7	2	8	5	5	6	4	5	5	5	5	5	5	1.5	8.5	1.5	8.5	5	5	3	7
6	5	5	1	9	2	8	0	10	0	10	0	10	0	10	1	9	1	9	3	7	5	5	1	9	0	10	5	5	5	5	0	10	1	9	1	9	0	10	0	10	3	7	1	9
7	10	0	0	10	0	10	0	10	0	10	0	10	0	10	0	10	0	10	5	5	10	0	0	10	0	10	0	10	10	0	10	0	0	0	10	0	0	10	0	10	10	0	0	10
8	7	3	7	3	7	3	4	6	5	5	5	5	6	4	1	9	5	5	5	5	5	5	7	3	1	9	1	9	9	1	9	1	9	1	9	1	1	9	1	9	9	1	1	9
9	7	3	3	7	5	5	0	10	3	7	3	7	5	5	5	5	5	5	1	9	1	9	1	9	1	9	1	9	10	0	8	2	8	2	5	5	0	10	0	10	1	9	1	9
10	9	1	5	5	5.5	4.5	1	9	5	5	5	5	5	5	5	5	5	5	5	5	5	5	5	5	4	6	6	4	5	5	5.5	4.5	5	5	5	5	3	7	3	7	5	5	4.5	5.5
11	1	9	0	10	1	9	1	9	0	10	0	10	2	8	0	10	1	9	5	5	8	2	6	4	1	9	1	9	2	8	1	9	1	9	1	9	.5	9.5	.5	9.5	.5	9.5	.5	9.5
12	5	5	5	5	5	5	3	7	0	10	10	0	5	5	5	5	0	10	5	5	5	5	0	10	1	9	5	5	5	5	5	5	5	5	5	5	0	10	0	10	10	0	0	10
13	6	4	5	5	7	3	1	9	3	7	4	6	6.5	3.5	4	6	5.5	4.5	6	4	5	5	7	3	6	4	6	4	6	4	5.5	4.5	5.5	4.5	6	4	2	8	1	9	5	5	5	5
14	0	10	0	10	0	10	0	10	0	10	0	10	0	10	1	9	5	5	1	9	1	9	5	5	0	10	5	5	10	0	5	5	5	5	5	5	1	9	0	10	5	5	0	10
15	10	0	0	10	0	10	0	10	7	3	0	10	0	10	0	10	8	2	0	10	0	10	0	10	0	10	5	5	5	5	0	10	0	10	0	10	0	10	0	10	10	0	0	10
Mean	6.3	3.7	3	7	3.9	6.1	1.3	8.7	2.3	7.7	2.9	7.1	3	7	2.2	7.8	4.8	5.2	4.2	5.8	4.8	5.2	3.3	6.7	1.6	8.4	4.3	5.7	6	4	4.8	5.2	4.2	5.8	4.3	5.7	1	9	.6	9.4	5.8	4.2	2.3	7.7
Std. Dev.	2.7	2.7	2.5	2.5	2.6	2.6	1.6	1.6	2.3	2.3	3.1	3.1	2.4	2.4	2.1	2.1	2.8	2.8	2.5	2.5	3.1	3.1	3	3	2	2	2.5	2.5	2.5	2.5	3.2	3.2	3	3	2.5	2.5	1.4	1.4	.8	.8	3.2	3.2	3.1	3.1
Dist Fn.	U	U	NO	NO	NO	NO	NO	NO	NO	NO	NO	NO	NO	NO	NO	NO	U	U	U	U	U	U	-	-	-	-	-	-	-	-	U	U	NO	NO	U	U	NO	NO	NO	NO	U	U	NO	NO

EXHIBIT 9: Effectiveness Measures Submitted by the Users

PHASE II (All values scaled by 10)

	A:Collection & Services																		B:Staff				C:Policies								D:Physical Facilities							
	1		2		3		4		5		6		7		8		9		1		2		1		2		3		4		1		2		3		4		5		6		7	
	+	−	+	−	+	−	+	−	+	−	+	−	+	−	+	−	+	−	+	−	+	−	+	−	+	−	+	−	+	−	+	−	+	−	+	−	+	−	+	−	+	−	+	−
1	7	3	4	6	5	5	1	9	5	5	4	6	2	8	1	9	5	5	5	5	7	3	1	9	5	9.5	—		5	5														
2	6	4	0	10	3	7	0	10	0	10	0	10	0	10	0	10	3	7	3	7	3	7	0	10	0	10	—		0	10														
3	7	3	6	4	7	3	7	3	4	6	8	2	3	7	3	7	4	6	10	0	10	0	9	1	1	9	—		5	5														
4	2	8	4	6	6	4	2	8	5	5	5	5	5	5	5	5	6	4	6	4	5	5	5	5	5	5	—		7	3														
5	7.5	2.5	6	4	6	4	2	8	4	6	3.5	6.5	5	5	5	5	6	4	6	4	5.5	4.5	5	5	3	7	—		6.5	3.5														
6	5	5	1	9	2	8	0	10	0	10	0	10	0	10	0	10	1	9	3	7	5	5	1	9	0	10	—		4	6														
7	5	5	0	10	0	10	0	10	0	10	0	10	0	10	0	10	10	0	5	5	10	0	0	10	0	10	—		10	0														
8	8	2	4	6	9	1	7	3	4	6	1	9	3	7	1	9	5	5	6	4	7	3	7	3	1	9	—		5	5														
9	7	3	1	9	1	9	1	9	3	7	3	7	5	5	5	5	5	5	3	7	3	7	1	9	1	9	—		0	10														
10	6	4	4	6	9	1	1	9	5	5	5	5	5	5	5	5	5	5	6	4	5.5	4.5	4	6	4	6	—		6	4														
11	5	5	0	10	1	9	1	9	0	10	0	10	2	8	0	10	1	9	5	5	8	2	6	4	1	9	—		5	5														
12	7	3	6	4	3	7	3	7	0	10	10	0	3	7	3	7	10	0	5	5	5	5	0	10	1	9	—		5	5														
13	5	5	5	5	7	3	0	10	2	8	5	5	6	4	3	7	6	4	7	3	6	4	4	6	5	5	—		6	4														
14	1	9	1	9	2.5	7.5	0	10	0	10	0	10	0	10	0	10	5	5	5	5	5	5	1	9	0	10	—		0	10														
15	10	0	0	10	0	10	0	10	7	3	0	10	0	10	0	10	8	2	5	5	5	5	0	10	0	10	—		5	5														
Mean	5.9	4.1	2.8	7.2	4.1	5.9	1.7	8.3	2.6	7.4	2.9	7.1	2.6	7.4	2.1	7.9	5.3	4.7	5.3	4.7	6	4	2.9	7.1	1.5	8.5	—		4.6	5.4														
Std. Dev.	2.2	2.2	2.3	2.3	3	3	2.3	2.3	2.4	2.4	3.1	3.1	2.2	2.2	2.1	2.1	2.6	2.6	1.7	1.7	2	2	2.9	2.9	1.8	1.8	—		2.7	2.7														
Dist. Fn.	U	U	NO	NO	NO	NO	NO	NO	NO	NO	NO	NO	NO	NO	NO	NO	U	U	U	U	U	U	---	---	---	---	—		---	---														

EXHIBIT 10: Effectiveness Measures Submitted by the Users

PHASE III (All values scaled by 10)

	A:Collection & Services																		B:Staff				C:Policies						D:Physical Facilities							
	1		2		3		4		5		6		7		8		9		1		2		1		2		3		4		1		2		3		4	
	+	-	+	-	+	-	+	-	+	-	+	-	+	-	+	-	+	-	+	-	+	-	+	-	+	-	+	-	+	-	+	-	+	-	+	-	+	-
1			5	5	5	5	5	5	3	7	2	8	2	8	5	5	9	1	7	3	7	3	5	9.5	5	9.5												
2			0	10	1	9	0	10	0	10	0	10	0	10	0	10	3	7	2	8	2	8	0	10	0	10												
3			8	2	6	4	8	2	5	5	8	2	1	9	3	7	4	6	10	0	10	0	9	1	1	9												
4			4	6	5	5	5	5	5	5	5	5	6	4	5	5	4	6	6	4	5	5	6	4	6	4												
5			6.5	3.5	5	5	5	5	4	6	3	7	5	5	4	6	7	3	6.5	3.5	6	4	7	3	4	6												
6			1	9	5	5	0	10	0	10	0	10	0	10	0	10	1	9	4	6	4	6	3	7	0	10												
7			0	10	0	10	0	10	0	10	0	10	0	10	0	10	10	0	5	5	10	0	0	10	0	10												
8			4	6	9	1	7	3	4	6	1	9	2	8	1	9	5	5	6	4	7	3	7	3	1	9												
9			1	9	0	10	0	10	0	10	0	10	5	5	1	9	5	5	3	7	3	7	9	1	1	9												
10			5	5	5.5	4.5	5	5	3	7	2	8	4	6	3	7	7	3	5.5	4.5	5	5	3	7	1	9												
11			0	10	1	9	1	9	0	10	0	10	2	8	0	10	1	9	5	5	8	2	6	4	1	9												
12			7	3	3	7	2	8	0	10	10	0	3	7	3	7	10	0	5	5	5	5	0	10	1	9												
13			4	6	6	4	2	8	2	8	5	5	6	4	4.5	5.5	6	4	6	4	6	4	5	5	5	5												
14			2	8	0	10	0	10	1	9	5	5	1	9	5	5	2	8	2	8	2	8	8	2	0	10												
15			0	10	0	10	0	10	7	3	0	10	0	10	0	10	8	2	5	5	5	5	0	10	0	10												
Mean			3.2	6.8	3.4	6.6	2.7	7.3	2.3	7.7	2.7	7.3	2.5	7.5	4.3	5.7	5.5	4.5	5.2	4.8	5.7	4.3	4.2	5.8	1.4	8.6												
Std. Dev.			2.7	2.7	2.8	2.8	2.8	2.8	2.3	2.3	3.1	3.1	2.2	2.2	2	2	2.9	2.9	2	2	2.4	2.4	3.4	3.4	1.9	1.9												
Dist. Fn.			NO	NO	NO	NO	NO	NO	NO	NO	NO	NO	NO	NO	NO	NO	U	U	U	U	U	U	-	-	-	-												

EXHIBIT 11: Effectiveness Measures Submitted by the Users

APPENDIX II: Computer Programs

Program 1: RANKORD - Program to perform comparative significance analysis (FORTRAN IV-6, Batch mode)

Program 2: Program to rank, cumulate and normalize a series of numbers (BASIC, Time-share mode)

Program 3: Program to perform Kolmogorov-Smirnov Goodness-of-Fit Test for uniform and normal distributions (BASIC, Time-share mode)

Program 1: RANKORD - Program to perform comparative significance analysis

```
FORTRAN IV G LEVEL  20                MAIN              DATE = 72081          15/48/09          PAGE 0001

                C
                C*****MAIN PROGRAM TO MAKE P TO Z TRANSFORM
                C
0001                  COMMON N,NO,M,N3,N2
0002                  INTEGER*2 MA(30,40),MB(30,40),MC(30,40),NO(40),N,M,N3,N2
0003                  DIMENSION A(40,40),B(40,40),E(100),C(40,40)
0004                  DATA A,B,C/4800*0./
0005                  READ(5,100)N,M
0006                  K=4*M
0007                  READ(5,110)(E(I),I=1,K)
0008                  READ(5,120)((MA(I,J),J=1,N),I=1,M)
0009                  READ(5,120)((MB(I,J),J=1,N),I=1,M)
0010                  READ(5,120,END=999)((MC(I,J),J=1,N),I=1,M)
0011                  WRITE(6,200)
0012                  CALL PBS(MA,A,E)
0013                  CALL TFM(A)
0014                  WRITE(6,210)
0015                  CALL PBS(MB,B,E)
0016                  CALL TFM(B)
0017                  WRITE(6,220)
0018                  CALL PBS(MC,C,E)
0019                  CALL TFM(C)
0020              100 FORMAT(2I3)
0021              110 FORMAT(4A4)
0022              120 FORMAT(20I4)
0023              200 FORMAT('1',54X,'PHASE 1'/)
0024              210 FORMAT('1',54X,'PHASE 2'/)
0025              220 FORMAT('1',54X,'PHASE 3'/)
0026              999 CALL EXIT
0027                  END
```

```
C001            SUBROUTINE PBS(MA,B,C)
                C
                C*****SUBROUTINE FOR PROBABILITIES FROM RAW DATA.
                C
0002                COMMON N,NO,M,N3,N2
0003                INTEGER*2 N,M,NO(40),N3,N2,MA(30,40)
0004                DIMENSION B(40,40),C(100)
0005                DO 10 I=1,N
0006                DO 10 J=1,N
0007                IF(I.EQ.J) GO TO 10
0008                DO 20 K=1,M
0009                IF(MA(K,I).GE.MA(K,J)) GO TO 20
0010                B(I,J)=B(I,J)+1.
0011             20 CONTINUE
0012                B(I,J)=B(I,J)/M
0013             10 CONTINUE
0014                L=1
0015                JM=4
0016                DO 40 I=1,N
0017                NO(I)=I
0018             40 CONTINUE
0019                WRITE(6,200)
0020                WRITE(6,210)(NO(I),I=1,N)
0021                DO 30 I=1,M
0022                WRITE(6,220)(C(K),K=L,JM),(MA(I,J),J=1,N)
0023                L=L+4
0024                JM=L+3
0025             30 CONTINUE
0026                WRITE(6,250)
0027                N2=N/2
0028                DO 50 I=1,N
0029                WRITE(6,230)(B(I,J),J=1,N2)
0030             50 CONTINUE
0031                WRITE(6,240)
0032                N3=N2+1
0033                DO 60 I=1,N
0034                WRITE(6,230)(B(I,J),J=N3,N)
0035             60 CONTINUE
0036                WRITE(6,240)
0037            200 FORMAT(40X,'RANK ORDERINGS SUBMITTED BY THE JUDGES'/)
0038            210 FORMAT('0',16X,38(1X,I2))
0039            220 FORMAT('0',4A4,38(1X,I2))
0040            230 FORMAT(' ',   17(F6.4,1X))
0041            240 FORMAT('1')
0042            250 FORMAT('1',55X,'MATRIX P'/' ',40X,'PERCENTAGE OF TIMES PARAMETER I
                   1JUDGED'/' ',43X,'MORE SIGNIFICANT THAN PARAMETER J'/'0')
0043                RETURN
0044                END
```

```
0001            SUBROUTINE TFM(B)
                C
                C*****TRANSFORMATION SUBROUTINE
                C
0002                COMMON N,NO,M,N3,N2
0003                INTEGER*2 N,NO(40),M,N3,N2
0004                DIMENSION B(40,40),Z(40,40),SUM(40),        ZBAR(40),GZ(40),
                   1          GZN(40)
0005                DATA Z/1600*0./
0006                DO 10 I=1,N
0007                DO 10 J=1,N
0008                IF(I.EQ.J) GO TO 10
0009                T=B(I,J)
0010                IF(B(I,J).LT..5) B(I,J)=1-B(I,J)
0011              5 IF(B(I,J).LE..99995) GO TO 4
0012                X=3.9
0013                GO TO 15
0014              4 X=SQRT(1.5708*ALOG(1/(1-(2*B(I,J)-1)**2)))
0015                IF(X.EQ.0.) GO TO 15
0016                C=(1/(-2*B(I,J)+2))**.0625
0017                DATA D1,D2,D3,D4,D5,D6/.049867,.021141,.003278,.000038,.000049,
                   1.000005/
0018                DO 14 K=1,20
0019                XST=X
0020                X=(-1+C+D2*X**2+2*D3*X**3+3*D4*X**4+4*D5*X**5+5*D6*X**6)/
                   1(D1+2*D2*X+3*D3*X**2+4*D4*X**3+5*D5*X**4+6*D6*X**5)
0021                IF(ABS((X-XST)/X).LT..00005  ) GO TO 15
0022             14 CONTINUE
0023                WRITE(6,200) X,XST,I,J
0024                GO TO 10
0025             15 IF(T.LT..5) X=-X
0026                Z(I,J)=X
0027                IF(T      .LT..5) B(I,J)=1-B(I,J)
0028             10 CONTINUE
0029                WRITE(6,300)
0030                DO 50 I=1,N
0031                WRITE(6,230)(Z(I,J),J=1,N2)
0032             50 CONTINUE
0033                WRITE(6,240)
0034                DO 60 I=1,N
0035                WRITE(6,230)(Z(I,J),J=N3,N)
0036             60 CONTINUE
0037                WRITE(6,310)
0038                GZT=0.0
0039                DATA SUM/40*0./
0040                DO 20 I=1,N
0041                DO 11 J=1,N
0042                SUM(I)=SUM(I)+Z(I,J)
0043             11 CONTINUE
0044                ZBAR(I)=(SUM(I))/N
0045                T=ZBAR(I)
0046                IF(T.LT.0.0) ZBAR(I)=-ZBAR(I)
0047                GZ(I)=1-.5/(1+D1*ZBAR(I)+D2*(ZBAR(I))**2+D3*(ZBAR(I))**3+D4*(ZBAR(
                   1I))**4+D5*(ZBAR(I))**5+D6*(ZBAR(I))**6)**16
0048                IF(T.LT.0.0) GZ(I)=1.-GZ(I)
0049                IF(T.LT.0.0) ZBAR(I)=-ZBAR(I)
0050                GZT=GZT+GZ(I)
```

```
C0051          20 CONTINUE
C0052             DO 30 I=1,N
C0053             GZN(I)=GZ(I)/GZT
C0054             WRITE(6,250) NO(I),GZN(I)
C0055          30 CONTINUE
C0056             WRITE(6,270)
0057              DIMENSION ZC(40,40) , PZ(40,40), DZ(40,40) ,A(40,40)
C0058             L=N-1
C0059             DATA A/1600*0./
C0060             F=0.0
0061              SUM2=0.
C0062             DO 19 I=1,L
C0063             JM=I+1
C0064             DO 19 J=JM,N
C0065             ZC(I,J)=ZBAR(I)-ZBAR(J)
0066              T=ZC(I,J)
C0067             IF(T.LT.0.0) ZC(I,J)=-ZC(I,J)
C0068             PZ(I,J)=1-.5/(1+D1*ZC(I,J)+D2*ZC(I,J)**2+D3*ZC(I,J)**3+D4*ZC(I,J)*
                 1*4+D5*ZC(I,J)**5+D6*ZC(I,J)**6)**16
C0069             IF(T.LT.0.0) PZ(I,J)=1.-PZ(I,J)
0070              A(I,J)=PZ(I,J)-B(I,J)
0071              SUM2=SUM2+ABS(A(I,J))
C0072             F=F+1.
C0073          19 CONTINUE
C0074             AD=(SUM2)/F
C0075             DO 31 I=1,N
C0076             WRITE(6,230)(A(I,J),J=1,N2)
C0077          31 CONTINUE
C0078             WRITE(6,240)
C0079             DO 32 I=1,N
C0080             WRITE(6,230)(A(I,J),J=N3,N)
0081           32 CONTINUE
C0082             WRITE(6,280)AD
C0083         200 FORMAT('0NO CONVERGENCE','XNEW=',F8.5,2X,'XOLD=',F8.5,2X,'AT Z('
                1,I2,',',I2,')')
C0084         230 FORMAT(' ',  17(F6.3,1X))
C0085         240 FORMAT('1')
C0086         250 FORMAT(' ',33X,'GZN(',I2,')',2X,F8.5)
C0087         270 FORMAT('1',44X,'CHECK ON CONSISTENCY OF JUDGES')
C0088         280 FORMAT('0','AVERAGE DEVIATION', 4X,F8.5)
C0089         300 FORMAT('1',55X,'MATRIX Z'/' ',46X,'BASIC TRANSFORMATION MATRIX'/
                1' ')
C0090         310 FORMAT('1',26X,'NORMALIZED RELATIVE SIGNIFICANCE'/' ')
0091              RETURN
C0092             END
```

Program 2: Program to rank, cumulate and normalize a series of numbers

```
  5 REM ranking, cumulating and normalizing a numerical series
 10 DIM Z(40),B(40),P(40),Q(40)
 15 PRINT ''
 20 PRINT 'No. of',' alternatives'
 25 PRINT ''
 30 INPUT N
 35 PRINT ''
 40 PRINT 'Phase is'
 45 INPUT G
 50 PRINT ''
 55 FOR I=1 TO N
 60 INPUT Z(I)
 65 NEXT I
 70 FOR I=1 TO N
 75 LET P(I)=I
 80 NEXT I
 85 LET B(1)=Z(1)
 90 LET Q(1)=P(1)
 95 LET I=1
100 FOR K=2 TO N
105 FOR R=1 TO I
110 LET L=I-K+2
115 LET J=I-K+1
120 IF B(J)-Z(K)>=0 THEN 150
125 LET B(L)=B(J)
130 LET B(J)=Z(K)
135 LET Q(L)=Q(J)
140 LET Q(J)=P(K)
145 GO TO 165
150 LET B(L)=Z(K)
155 LET Q(L)=P(K)
160 GO TO 171
165 NEXT K
171 LET I=I+1
175 NEXT A
180 PRINT ''
185 PRINT 'Phase  ',G
190 PRINT ''
195 PRINT 'The Ranked',' Values Are'
200 PRINT ''
205 FOR I=1 TO N
210 PRINT USING 215, I,B(I),Q(I)
215 IMAGE
    ---   --.-----   ---
220 NEXT I
225 LET K=0
230 LET U=0
235 FOR I=1 TO N
240 LET K=K+B(I)
245 NEXT I
250 GOSUB 305
255 PRINT ''
260 PRINT 'The Cumulated',' Values Are'
```

```
265 PRINT  ''
270 FOR I=1 TO N
275 LET L=N-I+1
280 LET C=C+B(L)
285 LET S=C/R
290 PRINT USING 295, I,S,Q(L)
295 IMAGE
---   --.-----   ---
300 NEXT I
301 GO TO 325
305 FOR X=1 TO 24
310 PRINT  ''
315 NEXT X
320 RETURN
325 END
```

Program 3: Program to perform Kolmogorov-Smirnov Goodness-of-Fit Test for Normal and uniform distributions

```
Kolmogorov-Smirnov Goodness-of-fit Test for Uniform and Normal Distributions
 10 DIM A(30),C(30),G(30),P(30)
 20 PRINT 'No. Observers'
 30 INPUT I
 40 PRINT ''
 45 PRINT 'Observed Values'
 50 PRINT ''
 54 FOR A=1 TO I
 55 INPUT A(A)
 56 NEXT A
 57 PRINT ''
 60 LET P(1)=A(1)
 70 LET K=1
 80 FOR A=2 TO I
 90 FOR K=1 TO K
100 LET L=K-K+2
110 LET J=A-K+1
120 IF P(J)-A(A)<=0 THEN 170
130 LET P(L)=P(J)
150 LET P(J)=A(A)
160 GO TO 190
170 LET P(L)=A(A)
180 GO TO 200
190 NEXT K
200 LET K=J+1
210 NEXT A
211 FOR J=1 TO I STEP 2
212 LET K=J+1
213 LET L=I-(J-1)/2
214 LET A(L)=P(J)
215 IF K>I THEN 217
216 LET A(K/2)=P(K)
217 NEXT J
220 LET Y=1+4/I
240 FOR A=1 TO I
250 LET Y=Y-8/I
260 IF ABS(Y)<.00001 THEN 310
270 IF Y<0 THEN 320
280 LET G(K)=1-.5/(1+.196854*Y+.115194*Y**2+.000344*Y**3+.019527*Y**4)**4
290 LET G(I-K+1)=1-G(K)
300 NEXT K
310 LET G(K)=.5
320 LET B=0
330 FOR J=1 TO I
335 LET L=I+1-J
340 LET B=B+A(L)
350 LET C(L)=B
360 NEXT J
370 PRINT  'Observs/','Observed/','Cum.Observed/','Normalized Cum.','/ Cum.Exp.Val.',' Diffs /','Cum.Exp.Val.',' Diff
380 PRINT  ',' Value ',' Value ',' Observed Val. ',' Uniform Dist.',',' Normal Dist.'
390 PRINT  ''
400 FOR J=1 TO I
410 LET S=C(J)/B
420 LET F=(I-J+1)/I
430 LET D=ABS(F-S)
440 LET E=ABS(G(J)-S)
450 PRINT USING 460, J,A(J),C(J),S,F,D,G(J),E
460 IMAGE
```

APPENDIX III: Computer Outputs

1. RANKORD: Normalized relative significance values for Phases I, II, and III including matrix outputs and tests for consistency among the judges

2. Normalized cumulative relative significance values, ranked, for Phases I, II and III

3. Kolmogorov-Smirnov Goodness-of-Fit Tests
   a. Alternatives Responses, Sample printout
   b. Maximum Differences, Alternatives grouped and individual

4. GERT Networks Inputs and Outputs
   a. Grouped Alternatives (GENI)
   b. Alternatives for Rho_{max} from GENI (RHO2)
   c. Alternatives for P_{max} from GENI (C & S)
   d. GERT Input form

MATRIX P
PERCENTAGE OF TIMES PARAMETER I JUDGED
MORE SIGNIFICANT THAN PARAMETER J

0.0	0.4211	0.3158	0.5263	0.5789	0.5263	0.3158	0.1053	0.3158	0.2105	0.1579	0.4737	0.1053	0.4737	0.2632	0.5789
0.3684	0.0	0.2105	0.3684	0.5263	0.4737	0.1053	0.2105	0.2105	0.2105	0.1053	0.4737	0.0526	0.5789	0.3158	0.5263
0.4737	0.2632	0.0	0.5263	0.5789	0.4211	0.2105	0.1579	0.3684	0.2105	0.1579	0.5263	0.0526	0.5789	0.3158	0.6316
0.2105	0.3684	0.2105	0.0	0.3684	0.3158	0.2105	0.1053	0.2632	0.1579	0.1053	0.3158	0.0526	0.5263	0.2105	0.4737
0.1579	0.1579	0.1579	0.2105	0.0	0.0526	0.0	0.1053	0.1053	0.1053	0.1053	0.2105	0.0	0.2632	0.1579	0.3158
0.2632	0.2632	0.2632	0.3684	0.4737	0.0	0.0526	0.1053	0.2105	0.1579	0.1053	0.4211	0.0526	0.5263	0.3158	0.4737
0.3684	0.5263	0.5789	0.4737	0.6316	0.5789	0.0	0.2105	0.4737	0.3158	0.2632	0.4737	0.0	0.5263	0.3684	0.5789
0.6421	0.7368	0.7368	0.7895	0.7895	0.7368	0.7368	0.0	0.7895	0.7789	0.6737	0.7895	0.3684	0.7895	0.6316	0.7895
0.3158	0.4737	0.3158	0.4737	0.6842	0.5789	0.3158	0.1579	0.0	0.3158	0.1579	0.4211	0.2105	0.6842	0.3158	0.6842
0.6316	0.5789	0.5789	0.6421	0.8421	0.6842	0.6263	0.2105	0.6789	0.0	0.1579	0.7368	0.1579	0.7895	0.3684	0.8947
0.7368	0.7895	0.7895	0.8421	0.8947	0.8947	0.6316	0.4211	0.7368	0.6789	0.0	0.6842	0.2632	0.8421	0.6316	0.8947
0.2632	0.2632	0.2632	0.2632	0.4211	0.3158	0.2632	0.1579	0.1579	0.1053	0.1053	0.0	0.1053	0.3684	0.0	0.4211
0.8421	0.6474	0.8947	0.8474	0.8474	0.8474	0.8947	0.6263	0.7368	0.6842	0.6316	0.8421	0.0	0.8474	0.7368	0.8421
0.3158	0.2632	0.2632	0.2632	0.1158	0.3158	0.2632	0.1579	0.2632	0.1053	0.1053	0.3158	0.0	0.0	0.1579	0.2632
0.5263	0.5789	0.5263	0.6842	0.6842	0.6316	0.5789	0.2105	0.5789	0.2105	0.2105	0.7368	0.1053	0.5789	0.0	0.7368
0.1579	0.2632	0.1579	0.1579	0.3684	0.2632	0.2632	0.0526	0.2105	0.0526	0.0526	0.2632	0.1053	0.3684	0.1053	0.0
0.5789	0.6316	0.5263	0.6842	0.6316	0.5789	0.4737	0.2105	0.6316	0.3684	0.2158	0.7368	0.2105	0.6842	0.3684	0.8421
0.2105	0.1579	0.1579	0.2105	0.2632	0.1579	0.1053	0.1053	0.1579	0.1579	0.1053	0.2632	0.1053	0.3158	0.1053	0.2105
0.2105	0.3158	0.2632	0.1579	0.2105	0.1579	0.1579	0.1053	0.1579	0.0526	0.0526	0.2105	0.0	0.2105	0.1053	0.1579
0.1053	0.2105	0.2105	0.1579	0.2632	0.2632	0.1579	0.0526	0.2105	0.0526	0.0526	0.3158	0.0	0.2105	0.1053	0.2105
0.3684	0.4737	0.4211	0.4211	0.5263	0.4737	0.3158	0.1579	0.4211	0.3158	0.1579	0.4737	0.1053	0.4737	0.3684	0.4737
0.0	0.0	0.0	0.0	0.0526	0.0	0.0	0.0526	0.0	0.0	0.0	0.0	0.0	0.0526	0.0	0.0
0.1579	0.3158	0.2632	0.3684	0.4211	0.3158	0.2632	0.1053	0.2105	0.2105	0.0526	0.4737	0.1052	0.4737	0.3158	0.4211
0.5263	0.6316	0.5789	0.6842	0.7789	0.6842	0.5789	0.3158	0.6316	0.3684	0.2105	0.6842	0.2105	0.6789	0.3158	0.7368
0.7368	0.7895	0.7368	0.7895	0.8421	0.7895	0.6842	0.5263	0.7895	0.7368	0.4737	0.7895	0.3684	0.8421	0.6316	0.8421
0.2632	0.4737	0.3684	0.4737	0.6789	0.4737	0.3158	0.0526	0.4737	0.2105	0.1579	0.4737	0.1053	0.5263	0.1579	0.5263
0.6316	0.7368	0.7368	0.6842	0.8947	0.7368	0.6316	0.3158	0.6316	0.5263	0.2105	0.7895	0.2105	0.7368	0.5789	0.7895
0.1053	0.1053	0.1053	0.1053	0.1053	0.1053	0.1053	0.0526	0.1053	0.1053	0.1053	0.1053	0.0526	0.1053	0.1053	0.1053
0.4737	0.6316	0.5789	0.6316	0.8842	0.6316	0.4211	0.2105	0.5789	0.4211	0.2632	0.7368	0.1053	0.6842	0.4737	0.6316
0.3684	0.3158	0.2632	0.4211	0.4211	0.3684	0.2105	0.2105	0.3158	0.1579	0.1579	0.3684	0.1053	0.3684	0.1053	0.3684
0.2105	0.3158	0.2632	0.3684	0.4211	0.3684	0.2632	0.0526	0.2632	0.1053	0.0526	0.3158	0.0	0.3158	0.2105	0.3158
0.3684	0.3158	0.2632	0.3684	0.4737	0.3684	0.3158	0.1579	0.3158	0.2105	0.0526	0.3684	0.1053	0.3158	0.1579	0.3684
0.6316	0.6316	0.5842	0.6842	0.8316	0.5789	0.5789	0.3684	0.5789	0.4211	0.2632	0.5789	0.1579	0.5789	0.4211	0.6842

0.2105 0.5789 0.6316 0.6316 0.7158 0.7895 0.5789 0.2632 0.0 0.3684 0.2105 0.6842 0.3684 0.5263 0.4211 0.4737 0.2105
0.3158 0.5263 0.5263 0.5263 0.3684 0.7895 0.5263 0.2632 0.0526 0.3684 0.1579 0.7368 0.3158 0.4211 0.5263 0.5789 0.2632
0.3684 0.5789 0.6316 0.6842 0.4737 0.8421 0.5789 0.2632 0.1053 0.3158 0.2105 0.7368 0.3158 0.4737 0.4737 0.6316 0.2632
0.1579 0.4737 0.4211 0.5263 0.3158 0.6842 0.4211 0.2105 0.1053 0.2632 0.2632 0.5789 0.2632 0.2632 0.3684 0.4737 0.2632
0.2632 0.2158 0.3684 0.3684 0.2632 0.4211 0.3684 0.2105 0.1053 0.1579 0.1053 0.3158 0.1579 0.2105 0.2105 0.2632 0.2105
0.3158 0.4737 0.5263 0.4737 0.3158 0.6842 0.5263 0.2105 0.1579 0.4211 0.1579 0.6316 0.2632 0.3684 0.4211 0.4737 0.3158
0.4737 0.6316 0.6316 0.6316 0.4211 0.7895 0.6842 0.2632 0.2105 0.4737 0.3684 0.6842 0.2632 0.4737 0.4737 0.5789 0.3684
0.5263 0.7368 0.7895 0.8947 0.6316 0.8947 0.8421 0.5263 0.3158 0.7895 0.6316 0.7895 0.7368 0.7895 0.8421 0.8421 0.5789
0.2632 0.7368 0.7368 0.8842 0.4737 0.9474 0.6842 0.2632 0.1053 0.3684 0.2632 0.7895 0.3684 0.5263 0.5789 0.6316 0.3684
0.4737 0.8421 0.9474 0.8947 0.6316 1.0000 0.7895 0.4211 0.1579 0.5789 0.3158 0.8947 0.4211 0.7895 0.7368 0.8842 0.4737
0.6316 0.8947 0.9474 0.8842 0.6316 0.9474 0.9474 0.5263 0.4211 0.8842 0.5263 0.8947 0.5263 0.7368 0.7895 0.7895 0.6316
0.2105 0.4211 0.5263 0.5263 0.2632 0.5263 0.3158 0.1053 0.0526 0.1579 0.1053 0.5263 0.1053 0.1579 0.3158 0.3158 0.2105
0.7368 0.8421 0.8947 0.9474 0.8421 0.9474 0.8421 0.6842 0.4737 0.7895 0.6842 0.8421 0.6842 0.8421 0.8947 0.8947 0.6842
0.2105 0.3158 0.2632 0.3158 0.2632 0.4211 0.2105 0.2105 0.0526 0.2105 0.1053 0.4211 0.1053 0.2632 0.2632 0.1053 0.2632
0.4737 0.8421 0.7895 0.7895 0.5263 0.8421 0.6316 0.4211 0.1579 0.5789 0.2632 0.7895 0.3158 0.6316 0.5263 0.5263 0.4211
0.0 0.3158 0.3158 0.4211 0.1053 0.5263 0.3158 0.1579 0.0526 0.1053 0.1053 0.4737 0.2105 0.2632 0.3158 0.2105 0.2105
0.0 0.8421 0.8421 0.8947 0.4211 0.9474 0.7368 0.3158 0.1579 0.5263 0.3684 0.8421 0.5789 0.6842 0.7368 0.7368 0.3158
0.0526 0.0 0.1579 0.2105 0.1579 0.3684 0.2105 0.1053 0.1053 0.2632 0.1053 0.4737 0.1579 0.1579 0.2105 0.2632 0.1579
0.0526 0.2632 0.0 0.2105 0.1053 0.3684 0.1579 0.1579 0.1579 0.2105 0.1053 0.4737 0.1579 0.2105 0.2632 0.2632 0.1053
0.0 0.2632 0.1579 0.0 0.0526 0.3684 0.1579 0.0526 0.0526 0.2105 0.0526 0.4737 0.1053 0.2105 0.2632 0.2632 0.0526
0.2105 0.5263 0.5263 0.5789 0.0 0.5789 0.4737 0.2632 0.1579 0.3158 0.3158 0.6316 0.3684 0.4737 0.4211 0.4737 0.2632
0.0 0.0 0.0 0.0 0.0 0.0 0.0 0.0 0.0 0.0526 0.0 0.2105 0.0 0.0 0.0 0.0 0.0
0.1053 0.3684 0.4737 0.4211 0.2632 0.5789 0.0 0.1579 0.0526 0.2105 0.1053 0.6316 0.2105 0.4211 0.4211 0.4737 0.2105
0.4737 0.7895 0.7368 0.7895 0.5263 0.8421 0.7368 0.0 0.1053 0.5789 0.3684 0.8421 0.4737 0.6316 0.5789 0.6316 0.4211
0.5789 0.8421 0.7895 0.8421 0.6842 0.9474 0.8947 0.5789 0.0 0.7368 0.5789 0.8421 0.6842 0.7895 0.8421 0.8947 0.6316
0.1579 0.4737 0.6316 0.6316 0.3684 0.7368 0.4211 0.2105 0.0526 0.0 0.1579 0.5789 0.2632 0.4737 0.4211 0.5263 0.3684
0.4211 0.8421 0.8421 0.8421 0.4211 0.9947 0.7368 0.4211 0.2632 0.7368 0.0 0.8421 0.4737 0.7895 0.7368 0.7368 0.4737
0.0526 0.1053 0.1053 0.1053 0.1053 0.1579 0.1053 0.1053 0.0526 0.1053 0.1053 0.0 0.1053 0.1053 0.1053 0.1053 0.1053
0.4211 0.7895 0.7368 0.7895 0.4737 0.7895 0.7368 0.3684 0.1579 0.5789 0.3684 0.7368 0.0 0.6316 0.4737 0.6316 0.4737
0.2632 0.5263 0.4737 0.5263 0.2632 0.6316 0.4737 0.2105 0.0526 0.2632 0.0526 0.5263 0.1053 0.0 0.3158 0.2105 0.2632
0.1579 0.4211 0.3684 0.4211 0.2632 0.4737 0.3684 0.2105 0.0526 0.2632 0.2105 0.4211 0.1053 0.3158 0.0 0.2105 0.1579
0.2105 0.4737 0.4737 0.4737 0.2632 0.5789 0.3684 0.2105 0.0 0.2632 0.0526 0.5263 0.0526 0.2632 0.3684 0.0 0.2632
0.4737 0.7368 0.7895 0.7368 0.6316 0.7895 0.6316 0.3684 0.2632 0.5263 0.3158 0.7895 0.4211 0.5789 0.6842 0.5263 0.0

MATRIX 2
'BASIC' TRANSFORMATION MATRIX

0.0	-0.199	-0.480	0.066	0.199	0.066	-0.480	-1.252	-0.480	-0.805	-1.003	-0.066	-1.252	-0.066	-0.634	0.199
-0.336	0.0	-0.805	-0.336	0.066	-0.066	-1.252	-0.805	-0.805	-0.805	-1.252	-0.066	-1.620	0.199	-0.480	0.066
-0.336	-0.634	0.0	0.066	0.199	-0.199	-0.805	-1.003	-0.336	-0.805	-1.003	0.066	-1.620	0.199	-0.480	0.336
-0.199	-0.336	-0.805	0.0	-0.336	-0.480	-0.805	-1.252	-0.634	-1.003	-1.252	-0.480	-1.620	0.066	-0.805	-0.066
-1.003	-1.003	-1.003	-0.805	0.0	-1.620	-3.900	-1.252	-1.252	-1.252	-1.252	-0.805	-3.900	-0.634	-1.003	-0.480
-0.634	-0.634	-0.634	-0.336	-0.066	0.0	-1.620	-1.252	-0.805	-1.003	-1.252	-0.199	-1.620	0.066	-0.480	-0.066
-0.336	0.066	0.199	-0.066	0.336	0.199	0.0	-0.805	-0.066	-0.480	-0.634	-0.066	-3.900	0.066	-0.336	0.199
1.003	0.634	0.634	0.805	0.805	0.634	0.634	0.0	0.805	0.199	-0.066	0.805	-0.336	0.805	0.336	0.805
-0.480	-0.066	-0.480	-0.066	0.480	0.199	-0.480	-1.003	0.0	-0.480	-1.003	-0.199	-0.805	0.480	-0.480	0.480
0.336	0.199	0.199	1.003	1.003	0.480	0.066	-0.805	0.199	0.0	-1.003	0.634	-1.003	0.805	-0.336	1.252
0.634	0.480	0.805	1.003	1.252	1.252	0.336	-0.199	0.634	0.199	0.0	0.480	-0.634	1.003	0.336	1.252
-0.634	-0.634	-0.634	-0.634	-0.199	-0.480	-0.634	-1.003	-1.003	-1.252	-1.252	0.0	-1.252	-0.336	-3.900	-0.199
1.003	1.620	1.252	1.620	1.620	1.620	1.252	0.066	0.634	0.480	0.336	1.003	0.0	1.620	0.634	1.003
-0.480	-0.634	-0.634	-0.634	-0.480	-0.480	-0.634	-1.003	-0.634	-1.252	-1.252	-0.480	-3.900	0.0	-1.003	-0.634
0.066	0.199	0.066	0.480	0.480	0.336	0.199	-0.805	0.199	-0.805	-0.805	0.634	-1.252	0.199	0.0	0.634
-1.003	-0.634	-1.003	-1.003	-0.336	-0.634	-0.634	-1.620	-0.805	-1.620	-1.620	-0.634	-1.252	-0.336	-1.252	0.0
0.199	0.336	0.336	0.480	0.336	0.199	-0.066	-0.805	0.336	-0.336	-0.480	0.634	-0.805	0.480	-0.336	1.003
-0.805	-1.003	-1.003	-0.805	-0.634	-1.003	-1.252	-1.252	-1.003	-1.003	-1.252	-0.634	-1.252	-0.480	-1.252	-0.805
-0.805	-0.480	-0.634	-1.003	-0.805	-1.003	-1.003	-1.252	-1.003	-1.620	-1.620	-0.805	-3.900	-0.805	-1.252	-1.003
-1.252	-0.805	-0.805	-1.003	-0.634	-0.634	-1.003	-1.620	-0.805	-1.620	-1.620	-0.480	-3.900	-0.805	-1.252	-0.805
-0.336	-0.066	-0.199	-0.199	0.066	-0.066	-0.480	-1.003	-0.199	-0.480	-1.003	-0.066	-1.252	-0.066	-0.336	-0.066
-3.900	-3.900	-3.900	-3.900	-1.620	-3.900	-3.900	-1.620	-3.900	-3.900	-3.900	-3.900	-3.900	-1.620	-3.900	-3.900
-1.003	-0.480	-0.634	-0.336	-0.199	-0.480	-0.634	-1.252	-0.805	-0.805	-1.620	-0.066	-1.252	-0.066	-0.480	-0.199
0.066	0.336	0.199	0.480	0.634	0.480	0.199	-0.480	0.336	-0.336	-0.805	0.480	-0.805	0.199	-0.480	0.634
0.634	0.805	0.634	0.805	1.003	0.805	0.480	0.066	0.805	0.634	-0.066	0.805	-0.336	1.003	0.336	1.003
-0.634	-0.066	-0.336	-0.066	0.199	-0.066	-0.480	-1.620	-0.066	-0.805	-1.003	-0.066	-1.252	0.066	-1.003	0.066
0.336	0.634	0.634	0.480	1.252	0.634	0.336	-0.480	0.336	0.066	-0.805	0.805	-0.805	0.634	0.199	0.805
-1.252	-1.252	-1.252	-1.252	-1.252	-1.252	-1.252	-1.620	-1.252	-1.252	-1.252	-1.252	-1.620	-1.252	-1.252	-1.252
-0.066	0.336	0.199	0.336	0.480	0.336	-0.199	-0.805	0.199	-0.199	-0.634	0.634	-1.252	0.480	-0.066	0.336
-0.634	-0.480	-0.634	-0.199	-0.199	-0.336	-0.805	-0.805	-0.480	-1.003	-1.003	-0.336	-1.252	-0.336	-1.252	-0.336
-0.805	-0.480	-0.634	-0.336	-0.199	-0.336	-0.634	-1.620	-0.634	-1.252	-1.620	-0.480	-3.900	-0.480	-0.805	-0.480
-0.336	-0.480	-0.634	-0.336	-0.066	-0.336	-0.480	-1.003	-0.480	-0.805	-1.620	-0.336	-1.252	-0.480	-1.003	-0.336
0.336	0.336	0.480	0.480	0.336	0.199	0.199	-0.336	0.199	-0.199	-0.634	0.199	-1.003	0.199	-0.199	0.480

CHECK ON CONSISTENCY OF JUDGES

0.0	0.078	0.131	0.038	0.157	0.013	0.109	0.067	0.074	0.010	-0.004	0.187	-0.012	0.203	0.065	0.125
0.0	0.0	0.257	0.196	0.211	0.067	0.320	-0.037	0.180	0.011	0.049	0.188	0.041	0.099	0.011	0.179
0.0	0.0	0.0	0.056	0.199	0.171	0.267	0.051	0.073	0.052	0.030	0.182	0.065	0.144	0.060	0.117
0.0	0.0	0.0	0.0	0.312	0.100	0.152	0.029	0.066	0.018	0.014	0.265	0.017	0.091	0.060	0.173
0.0	0.0	0.0	0.0	0.0	0.245	0.200	-0.048	0.078	-0.025	-0.056	0.204	0.026	0.168	-0.019	0.146
0.0	0.0	0.0	0.0	0.0	0.0	0.334	0.043	0.142	0.014	0.026	0.203	0.025	0.114	-0.004	0.195
0.0	0.0	0.0	0.0	0.0	0.0	0.0	0.015	-0.010	-0.035	-0.060	0.254	0.129	0.215	0.029	0.137
0.0	0.0	0.0	0.0	0.0	0.0	0.0	0.0	-0.043	-0.010	-0.004	0.126	-0.015	0.130	0.059	0.141
0.0	0.0	0.0	0.0	0.0	0.0	0.0	0.0	0.0	-0.004	0.072	0.336	-0.061	0.096	0.117	0.109
0.0	0.0	0.0	0.0	0.0	0.0	0.0	0.0	0.0	0.0	0.244	0.145	0.133	0.101	0.257	0.110
0.0	0.0	0.0	0.0	0.0	0.0	0.0	0.0	0.0	0.0	0.0	0.240	0.119	0.088	0.084	0.045
0.0	0.0	0.0	0.0	0.0	0.0	0.0	0.0	0.0	0.0	0.0	0.0	-0.064	0.149	0.193	0.127
0.0	0.0	0.0	0.0	0.0	0.0	0.0	0.0	0.0	0.0	0.0	0.0	0.0	0.015	0.071	0.126
0.0	0.0	0.0	0.0	0.0	0.0	0.0	0.0	0.0	0.0	0.0	0.0	0.0	0.0	0.024	0.268
0.0	0.0	0.0	0.0	0.0	0.0	0.0	0.0	0.0	0.0	0.0	0.0	0.0	0.0	0.0	0.121
0.0	0.0	0.0	0.0	0.0	0.0	0.0	0.0	0.0	0.0	0.0	0.0	0.0	0.0	0.0	0.0

0.058	0.120	0.100	0.124	0.154	0.209	0.004	0.036	0.153	0.129	0.019	0.127	-0.048	0.054	0.231	0.142	0.096
-0.037	0.180	0.012	0.260	0.163	0.209	0.037	0.037	0.101	0.129	0.072	0.075	0.000	0.160	0.127	0.039	0.045
-0.044	0.170	0.142	0.138	0.050	0.157	0.055	0.084	0.081	0.238	0.062	0.109	0.054	0.159	0.227	0.034	0.052
0.054	0.174	0.201	0.209	0.091	0.314	0.008	0.035	0.013	0.199	-0.079	0.166	0.002	0.253	0.223	0.040	-0.010
-0.152	0.147	0.133	0.155	-0.021	0.071	-0.032	-0.097	-0.056	0.103	-0.020	0.284	-0.021	0.123	0.165	0.105	-0.082
-0.070	0.150	0.178	0.282	0.115	0.314	0.017	0.055	-0.027	0.046	0.043	0.152	0.023	0.171	0.154	0.104	-0.043
-0.128	0.139	0.104	0.205	0.125	0.210	-0.029	0.105	-0.005	0.058	-0.077	0.174	0.126	0.179	0.246	0.107	0.008
0.113	0.154	0.153	0.068	0.175	0.105	0.033	0.136	0.152	0.036	-0.051	0.177	-0.053	0.085	0.067	0.050	0.091
0.110	0.057	0.033	0.174	0.109	0.052	0.003	0.140	0.123	0.249	0.060	0.048	0.058	0.159	0.170	0.046	0.043
0.097	0.083	-0.027	0.036	0.125	-0.000	0.047	0.175	0.242	0.158	0.156	0.056	0.165	0.045	0.141	0.173	0.131
0.018	0.340	0.004	0.070	0.196	0.053	-0.057	0.163	0.077	0.100	0.083	0.077	0.124	0.152	0.131	0.116	0.065
-0.053	0.125	0.118	0.079	0.049	0.469	0.102	0.068	0.022	0.178	0.019	0.156	0.084	0.259	0.175	0.136	-0.012
0.031	0.125	0.027	0.035	0.051	0.053	0.005	0.102	0.142	0.116	0.035	0.144	0.119	0.093	0.062	0.052	0.103
-0.063	0.210	0.367	0.314	0.034	0.574	0.191	-0.048	0.016	0.110	0.010	0.244	0.073	0.136	0.210	0.110	-0.055
-0.024	-0.003	0.072	0.103	0.120	0.158	0.113	0.049	0.125	0.092	0.123	0.119	0.178	0.111	0.274	0.246	0.057
0.150	0.185	0.224	0.179	0.165	0.068	0.056	-0.014	0.007	0.157	-0.004	0.162	-0.052	0.106	0.127	0.198	-0.002
0.0	0.320	0.047	0.021	0.275	0.052	0.050	0.209	0.173	0.192	0.071	0.087	-0.030	0.101	0.100	0.075	0.217
0.0	0.0	0.381	0.349	0.112	0.025	0.160	0.030	-0.046	0.029	-0.005	0.161	-0.000	0.210	0.231	0.141	-0.010
0.0	0.0	0.0	0.351	0.133	0.024	0.177	-0.035	-0.109	0.049	-0.021	0.124	-0.022	0.122	0.141	0.194	0.022
0.0	0.0	0.0	0.0	0.141	0.619	0.123	0.041	-0.018	0.001	0.010	0.063	-0.001	0.068	0.082	0.347	0.045
0.0	0.0	0.0	0.0	0.0	0.470	0.139	0.063	0.013	0.210	-0.063	0.200	-0.020	0.136	0.259	0.171	0.071
0.0	0.0	0.0	0.0	0.0	0.0	0.002	0.000	0.000	-0.051	0.000	-0.195	0.000	0.002	0.004	0.003	0.000
0.0	0.0	0.0	0.0	0.0	0.0	0.0	0.073	0.056	0.203	0.066	0.119	0.040	0.076	0.152	0.041	0.027
0.0	0.0	0.0	0.0	0.0	0.0	0.0	0.0	0.204	0.118	0.047	0.079	0.051	0.135	0.242	0.163	0.048
0.0	0.0	0.0	0.0	0.0	0.0	0.0	0.0	0.0	0.108	0.033	0.130	0.028	0.101	0.080	0.012	0.067
0.0	0.0	0.0	0.0	0.0	0.0	0.0	0.0	0.0	0.0	0.074	0.235	0.061	0.110	0.235	0.093	-0.058
0.0	0.0	0.0	0.0	0.0	0.0	0.0	0.0	0.0	0.0	0.0	0.106	0.135	0.038	0.134	0.113	0.119
0.0	0.0	0.0	0.0	0.0	0.0	0.0	0.0	0.0	0.0	0.0	0.0	-0.017	0.143	0.206	0.173	-0.023
0.0	0.0	0.0	0.0	0.0	0.0	0.0	0.0	0.0	0.0	0.0	0.0	0.0	0.116	0.331	0.145	0.011
0.0	0.0	0.0	0.0	0.0	0.0	0.0	0.0	0.0	0.0	0.0	0.0	0.0	0.0	0.259	0.326	-0.023
0.0	0.0	0.0	0.0	0.0	0.0	0.0	0.0	0.0	0.0	0.0	0.0	0.0	0.0	0.0	0.251	0.027
0.0	0.0	0.0	0.0	0.0	0.0	0.0	0.0	0.0	0.0	0.0	0.0	0.0	0.0	0.0	0.0	-0.051
0.0	0.0	0.0	0.0	0.0	0.0	0.0	0.0	0.0	0.0	0.0	0.0	0.0	0.0	0.0	0.0	0.0

AVERAGE DEVIATION 0.11645

PHASE I

NORMALIZED RELATIVE SIGNIFICANCE

GZN(1)	0.02771
GZN(2)	0.02778
GZN(3)	0.03167
GZN(4)	0.02320
GZN(5)	0.01235
GZN(6)	0.02489
GZN(7)	0.03338
GZN(8)	0.05577
GZN(9)	0.03615
GZN(10)	0.05101
GZN(11)	0.05770
GZN(12)	0.01684
GZN(13)	0.06445
GZN(14)	0.01589
GZN(15)	0.04141
GZN(16)	0.01422
GZN(17)	0.04562
GZN(18)	0.01417
GZN(19)	0.01227
GZN(20)	0.00959
GZN(21)	0.02991
GZN(22)	0.00003
GZN(23)	0.02193
GZN(24)	0.04375
GZN(25)	0.05784
GZN(26)	0.02797
GZN(27)	0.05014
GZN(28)	0.00819
GZN(29)	0.04187
GZN(30)	0.02210
GZN(31)	0.01739
GZN(32)	0.01972
GZN(33)	0.04308

MATRIX P
PERCENTAGE OF TIMES PARAMETER I WAS
MORE SIGNIFICANT THAN PARAMETER J

0.0	0.3684	0.4211	0.5263	0.6842	0.6316	0.2632	0.7368	0.4211	0.2632	0.0526	0.3684	0.1579	0.5789	0.3158	0.4211
0.2105	0.0	0.2105	0.3158	0.6842	0.5263	0.2105	0.7368	0.2105	0.0526	0.0526	0.2632	0.1053	0.5789	0.2105	0.4211
0.3158	0.3684	0.0	0.4211	0.6842	0.5789	0.2105	0.6842	0.2105	0.1053	0.0	0.3684	0.0526	0.5263	0.3158	0.5263
0.2632	0.4211	0.2105	0.0	0.5789	0.4737	0.2105	0.5789	0.2632	0.1053	0.0	0.3158	0.0526	0.4737	0.2105	0.2632
0.0526	0.0	0.0526	0.0526	0.0	0.0	0.0	0.1053	0.0	0.0	0.0	0.0526	0.0	0.0526	0.0526	0.0526
0.0526	0.1053	0.1053	0.1053	0.4211	0.0	0.0	0.4211	0.1579	0.0526	0.0	0.1579	0.0526	0.3684	0.1579	0.1053
0.4737	0.6316	0.5789	0.5789	0.7895	0.7368	0.0	0.8421	0.5789	0.1579	0.0526	0.3684	0.1579	0.5789	0.3158	0.5789
0.1053	0.1053	0.1053	0.1053	0.2632	0.1579	0.0526	0.0	0.1579	0.0526	0.0	0.1053	0.0526	0.0526	0.1053	0.1579
0.2632	0.4211	0.4211	0.4737	0.6316	0.5789	0.3158	0.6316	0.0	0.2632	0.0526	0.3684	0.1053	0.4737	0.3158	0.5789
0.6316	0.8421	0.6316	0.7368	0.9474	0.8421	0.5789	0.8947	0.6316	0.0	0.0526	0.6842	0.2105	0.8421	0.4211	0.7368
0.8421	0.9474	0.8421	1.0000	1.0000	0.9474	0.7895	1.0000	0.8947	0.5789	0.0	0.7895	0.4737	1.0000	0.8421	0.9474
0.4737	0.5789	0.5789	0.4211	0.6316	0.6316	0.3158	0.6316	0.4737	0.0526	0.0526	0.0	0.2105	0.4737	0.2632	0.5263
0.7368	0.8421	0.7895	0.8421	0.9421	0.8421	0.7368	0.7895	0.6842	0.5263	0.2632	0.6842	0.0	0.7895	0.5789	0.7368
0.3158	0.2632	0.3158	0.3684	0.4211	0.3158	0.2105	0.3684	0.3158	0.0526	0.0	0.2632	0.0	0.0	0.1053	0.3158
0.4211	0.5263	0.5789	0.7368	0.8947	0.7895	0.4737	0.8421	0.5263	0.2632	0.0	0.5789	0.1579	0.7368	0.0	0.6316
0.2632	0.3684	0.2105	0.2632	0.4737	0.3684	0.2105	0.5789	0.2632	0.1053	0.0	0.2632	0.1053	0.4211	0.2105	0.0
0.6316	0.6842	0.5316	0.7368	0.7895	0.7368	0.5789	0.7368	0.6842	0.4211	0.0526	0.6316	0.1579	0.7789	0.3684	0.5789
0.2632	0.1053	0.0526	0.1053	0.2632	0.1579	0.0	0.3158	0.0	0.1053	0.0	0.1579	0.0	0.2632	0.0526	0.1579
0.3158	0.3684	0.3684	0.2632	0.5263	0.4737	0.3158	0.5263	0.3684	0.1053	0.0526	0.1053	0.1579	0.3684	0.1579	0.2105
0.2105	0.2632	0.1579	0.2105	0.4211	0.3684	0.1579	0.4211	0.2105	0.0	0.0	0.1053	0.0526	0.2632	0.1053	0.2105
0.5789	0.6316	0.6316	0.7368	0.7895	0.7895	0.5263	0.7895	0.6842	0.4211	0.0526	0.6316	0.2105	0.6842	0.3158	0.5263
0.0	0.0526	0.0	0.0	0.1053	0.0526	0.0	0.0526	0.0526	0.0	0.0	0.0	0.0	0.0526	0.0	0.0
0.3158	0.4737	0.4211	0.3158	0.5263	0.4737	0.2632	0.4737	0.3684	0.2105	0.0	0.3684	0.2105	0.4211	0.2105	0.3158
0.3158	0.4211	0.3684	0.4737	0.5263	0.4211	0.2632	0.4737	0.4211	0.2105	0.1053	0.3684	0.1579	0.4211	0.3684	0.3684
0.8421	0.8947	0.8421	0.8421	1.0000	0.9474	0.7895	0.9474	0.8421	0.5789	0.3158	0.7895	0.4737	0.8421	0.6316	0.8421
0.1053	0.1053	0.1053	0.2632	0.4737	0.3684	0.1053	0.4737	0.2105	0.0526	0.0	0.2105	0.0526	0.4211	0.1579	0.2632
0.3158	0.3158	0.2632	0.3684	0.4211	0.3684	0.2632	0.4211	0.3158	0.1579	0.0	0.3684	0.1579	0.4737	0.2632	0.3158
0.1053	0.1053	0.1053	0.1053	0.1053	0.1053	0.1053	0.1579	0.1053	0.1053	0.0526	0.0526	0.1053	0.1053	0.1053	0.1053
0.4737	0.4737	0.4211	0.6316	0.7368	0.6842	0.4737	0.6316	0.4737	0.2632	0.0	0.5263	0.0526	0.5789	0.2632	0.5789
0.3158	0.4737	0.3684	0.4737	0.6263	0.4737	0.3158	0.5263	0.3158	0.2105	0.0	0.3158	0.1053	0.4211	0.3158	0.4211
0.1579	0.2632	0.2105	0.2105	0.2632	0.2632	0.1579	0.2632	0.2105	0.0526	0.0	0.1579	0.0526	0.1579	0.0526	0.1579
0.2632	0.3158	0.3158	0.3684	0.4211	0.3158	0.1579	0.3684	0.3158	0.1579	0.0	0.2105	0.0526	0.3158	0.2105	0.3684
0.5789	0.7368	0.6842	0.7368	0.8421	0.7895	0.6316	0.7368	0.7368	0.4211	0.2105	0.5789	0.4211	0.7368	0.5263	0.6316

0.1579 0.7368 0.4737 0.6842 0.2632 0.8421 0.4737 0.4211 0.1053 0.5263 0.4737 0.7895 0.3684 0.5263 0.6316 0.6316 0.2632
0.2105 0.5789 0.4211 0.4737 0.2105 0.7368 0.4737 0.4211 0.1579 0.4211 0.5263 0.6842 0.3684 0.3684 0.6316 0.5263 0.1579
0.1579 0.5263 0.4737 0.5789 0.2105 0.7368 0.4737 0.3684 0.1053 0.4737 0.4737 0.6842 0.3684 0.4737 0.4737 0.5263 0.2105
0.1053 0.4211 0.4211 0.5263 0.1579 0.6316 0.2632 0.3158 0.0526 0.3684 0.3684 0.5789 0.1579 0.2632 0.4737 0.4737 0.2632
0.0526 0.1053 0.0526 0.1053 0.0 0.3158 0.1053 0.0526 0.0 0.1053 0.1579 0.2632 0.0526 0.0 0.2105 0.0526 0.1053
0.0526 0.3158 0.1579 0.2632 0.0526 0.5263 0.2105 0.1053 0.0 0.2105 0.2105 0.5263 0.1579 0.2105 0.4737 0.3684 0.1053
0.2105 0.6842 0.5263 0.6316 0.2632 0.8947 0.5263 0.3684 0.0 0.6842 0.6316 0.7895 0.3684 0.5263 0.6842 0.6842 0.2632
0.1053 0.3158 0.1579 0.2105 0.0526 0.3158 0.2105 0.1053 0.0526 0.2105 0.2632 0.3684 0.1053 0.1579 0.2632 0.2105 0.1579
0.2105 0.5789 0.4737 0.5789 0.2632 0.7368 0.5263 0.3684 0.1579 0.5789 0.4737 0.6842 0.3158 0.3158 0.5789 0.4737 0.2105
0.3684 0.8421 0.6842 0.7368 0.9474 0.7368 0.5789 0.1579 0.6842 0.6842 0.8947 0.6316 0.6316 0.8421 0.7895 0.6842 0.4211
0.7368 1.0000 0.8947 0.9474 0.7895 1.0000 1.0000 0.7368 0.4737 0.8947 0.8947 0.8947 0.8947 0.7895 1.0000 0.9474 0.5263
0.2105 0.6842 0.6842 0.6316 0.2632 0.6842 0.4158 0.4211 0.0526 0.5789 0.4211 0.6316 0.3158 0.2632 0.6316 0.5263 0.2632
0.6316 0.8421 0.7368 0.7895 0.6316 0.8421 0.7368 0.5789 0.4211 0.7368 0.6316 0.7895 0.5789 0.6316 0.7368 0.6842 0.4211
0.0526 0.4737 0.3158 0.3684 0.0 0.5263 0.3158 0.2105 0.0526 0.3684 0.2632 0.4737 0.2105 0.2632 0.4211 0.2105 0.2105
0.3158 0.8421 0.6842 0.6842 0.4211 0.9474 0.7368 0.4211 0.2105 0.6316 0.5263 0.8947 0.4211 0.5789 0.8421 0.6842 0.3158
0.0 0.3684 0.2632 0.3684 0.1053 0.5789 0.3684 0.2105 0.1053 0.2105 0.3158 0.5263 0.2105 0.2632 0.4211 0.4211 0.2632
0.0 0.8421 0.6842 0.7895 0.2632 0.9421 0.7368 0.4211 0.2105 0.6842 0.6316 0.7895 0.4737 0.5789 0.7895 0.7368 0.3684
0.0 0.0 0.1053 0.1579 0.0526 0.3684 0.1579 0.1053 0.0 0.2105 0.2632 0.3684 0.0526 0.0526 0.2632 0.2632 0.1579
0.1053 0.4211 0.0 0.2632 0.1579 0.5263 0.2632 0.2632 0.1053 0.3158 0.3158 0.5263 0.2105 0.2105 0.4737 0.4211 0.2105
0.0 0.3684 0.1579 0.0 0.0526 0.5263 0.1579 0.1053 0.0 0.2105 0.2632 0.4737 0.1579 0.1053 0.4211 0.3158 0.1579
0.3158 0.8421 0.6316 0.7895 0.0 0.8947 0.6842 0.5263 0.3158 0.7368 0.5789 0.7895 0.5263 0.5789 0.7895 0.6842 0.4211
0.0 0.0526 0.0 0.0 0.0 0.0 0.0 0.0 0.0 0.0 0.0 0.2105 0.0 0.0 0.0526 0.0526 0.0
0.0526 0.5263 0.4737 0.5263 0.0526 0.6316 0.0 0.2105 0.0 0.4737 0.2632 0.5263 0.2632 0.3158 0.5789 0.4737 0.2632
0.2632 0.7895 0.3684 0.4211 0.2632 0.6316 0.5263 0.0 0.0526 0.4211 0.4211 0.5263 0.3684 0.4737 0.5263 0.4737 0.2105
0.5789 1.0000 0.8421 0.8947 0.5789 1.0000 0.8947 0.7368 0.0 0.8947 0.8947 0.8947 0.8421 0.7895 0.9474 0.8947 0.5789
0.0526 0.3684 0.4211 0.3158 0.1579 0.5789 0.2632 0.1579 0.0 0.0 0.2632 0.5263 0.2105 0.2632 0.3684 0.3684 0.2105
0.1579 0.4211 0.3684 0.3158 0.2105 0.4737 0.3158 0.2105 0.0526 0.3158 0.0 0.4737 0.3158 0.3684 0.4737 0.3158 0.1053
0.1053 0.1053 0.0526 0.1053 0.1053 0.1579 0.1053 0.0526 0.0526 0.1053 0.1053 0.0 0.1053 0.1053 0.1053 0.1053 0.1053
0.2632 0.7368 0.5789 0.6316 0.3684 0.7368 0.6316 0.4737 0.1579 0.6316 0.4211 0.7368 0.0 0.4737 0.6316 0.5789 0.2632
0.2105 0.5263 0.4737 0.5789 0.2105 0.6842 0.3684 0.2632 0.1579 0.5263 0.4211 0.6316 0.2632 0.0 0.5789 0.4211 0.2632
0.0 0.2632 0.1579 0.2105 0.1053 0.3158 0.1053 0.1053 0.0526 0.2105 0.1053 0.3158 0.0526 0.2105 0.0 0.1579 0.1053
0.1579 0.3684 0.2105 0.3158 0.1579 0.4737 0.3158 0.2105 0.1053 0.4211 0.2632 0.4737 0.1579 0.1579 0.4211 0.0 0.1579
0.5263 0.8421 0.6316 0.7368 0.4737 0.8421 0.6842 0.5789 0.3684 0.7368 0.7368 0.8421 0.6316 0.5789 0.8421 0.7895 0.0

MATRIX 2
BASIC TRANSFORMATION MATRIX

0.0	-0.336	-0.199	0.066	0.480	0.336	-0.634	0.634	-0.199	-0.634	-1.620	-0.336	-1.003	0.199	-0.480	-0.199
-0.336	0.0	-0.336	-0.480	0.480	0.066	-0.805	0.634	-0.805	-1.620	-1.620	-0.634	-1.252	0.199	-0.805	-0.199
-0.480	-0.336	0.0	-0.199	0.480	0.199	-0.805	0.480	-0.805	-1.252	-3.900	-0.336	-1.620	0.066	-0.480	0.066
-0.634	-0.199	-0.805	0.0	0.199	-0.066	-0.805	0.199	-0.634	-1.252	-3.900	-0.480	-1.620	-0.066	-0.805	-0.634
-1.620	-3.900	-1.620	-1.620	0.0	-3.900	-3.900	-1.252	-3.900	-3.900	-3.900	-1.620	-3.900	-1.620	-1.620	-1.620
-1.620	-1.252	-1.252	-1.252	-0.199	0.0	-3.900	-0.199	-1.003	-1.620	-3.900	-1.003	-1.620	-0.336	-1.003	-1.252
-0.336	-0.199	-0.199	-0.066	0.805	0.634	0.0	1.003	0.199	-1.003	-1.620	-0.336	-1.003	0.199	-0.480	0.199
-1.252	-1.252	-1.252	-1.252	-0.634	-1.003	-1.620	0.0	-1.003	-1.620	-3.900	-1.252	-1.620	-1.620	-1.252	-1.003
-0.634	-0.199	-0.199	-0.066	0.336	0.199	-0.480	0.336	0.0	-0.634	-1.620	-0.336	-1.252	-0.066	-0.480	0.199
0.336	1.003	0.336	0.634	1.620	1.003	0.199	1.252	0.336	0.0	-1.620	0.480	-0.805	1.003	-0.199	0.634
1.003	1.620	1.003	3.900	3.900	1.620	3.905	3.900	1.252	0.199	0.0	0.805	-0.066	3.900	1.003	1.620
-0.066	0.199	0.199	-0.199	0.336	0.336	-0.480	0.336	-0.066	-1.620	-1.620	0.0	-0.805	-0.066	-0.634	0.066
0.634	1.003	0.805	1.003	1.003	1.003	0.634	0.805	0.480	0.066	-0.634	0.480	0.0	0.805	0.199	0.634
-0.480	-0.634	-0.480	-0.336	-0.199	-0.480	-0.805	-0.336	-0.480	-1.620	-3.900	-0.634	-3.900	0.0	-1.252	-0.480
-0.199	0.066	0.199	0.634	1.252	0.805	-0.066	1.003	0.066	-0.634	-3.900	0.199	-1.003	0.634	0.0	0.336
-0.634	-0.336	-0.805	-0.634	-0.066	-0.336	-0.805	0.199	-0.634	-1.252	-3.900	-0.634	-1.252	-0.199	-0.805	0.0
0.336	0.480	0.336	0.634	0.805	0.634	0.199	0.634	0.480	-0.199	-1.620	0.336	-1.003	0.199	-0.336	0.199
-1.620	-1.252	-1.620	-1.252	-0.634	-1.003	-3.900	-0.480	-3.900	-1.252	-3.900	-1.003	-3.900	-0.634	-1.620	-1.003
-0.480	-0.336	-0.336	-0.634	0.066	-0.066	-0.480	0.066	-0.336	-1.252	-1.620	-1.252	-1.003	-0.336	-1.003	-0.805
-0.805	-0.634	-1.003	-0.805	-0.199	-0.336	-1.003	-0.199	-0.805	-3.900	-3.900	-1.252	-1.620	-0.634	-1.252	-0.805
0.199	0.336	0.336	0.634	0.805	0.805	0.066	0.805	0.480	-0.199	-1.620	0.336	-0.805	0.480	-0.480	0.066
-3.900	-1.620	-3.900	-3.900	-1.252	-1.620	-3.900	-1.620	-1.620	-3.900	-3.900	-3.900	-3.900	-1.620	-3.900	-3.900
-0.336	-0.066	-0.199	-0.480	0.066	-0.066	-0.634	-0.066	-0.336	-0.805	-3.900	-0.336	-0.805	-0.199	-0.805	-0.480
-0.480	-0.199	-0.336	-0.066	0.066	-0.199	-0.634	-0.066	-0.199	-0.805	-1.252	-0.336	-1.003	-0.199	-0.336	-0.336
1.003	1.252	1.003	1.003	3.900	1.620	0.805	1.620	1.003	0.199	-0.480	0.805	-0.066	1.003	0.336	1.003
-1.252	-0.480	-1.252	-0.634	-0.066	-0.336	-1.252	-0.066	-0.805	-1.620	-3.900	-0.805	-1.620	-0.199	-1.003	-0.634
-0.480	-0.480	-0.634	-0.336	-0.199	-0.336	-0.634	-0.199	-0.480	-1.003	-3.900	-0.336	-1.003	-0.066	-0.634	-0.480
-1.252	-1.252	-1.252	-1.252	-1.252	-1.252	-1.252	-1.003	-1.252	-1.252	-1.620	-1.620	-1.252	-1.252	-1.252	-1.252
-0.066	-0.066	-0.199	0.199	0.634	0.480	-0.066	0.336	-0.066	-0.634	-3.900	0.066	-1.620	0.199	-0.634	0.199
-0.480	-0.805	-0.336	-0.805	0.066	-0.066	-0.480	0.066	-0.480	-0.805	-3.900	-0.480	-1.252	-0.199	-0.480	-0.199
-1.003	-0.634	-0.805	-0.805	-0.634	-0.634	-1.003	-0.634	-0.805	-1.620	-3.900	-1.003	-1.620	-1.003	-1.620	-1.003
-0.634	-0.480	-0.480	-0.336	-0.199	-0.480	-1.003	-0.336	-0.480	-1.003	-3.900	-0.805	-1.620	-0.480	-0.805	-0.336
0.199	0.634	0.480	0.634	1.003	0.805	0.336	0.634	0.634	-0.199	-0.805	0.199	-0.199	0.634	0.066	0.336

-1.003	0.634	-0.066	0.480	-0.634	1.003	-0.066	-0.199	-1.252	0.066	-0.066	0.805	-0.336	0.066	0.336	0.336	-0.634
-0.805	0.199	-0.199	-0.066	-0.805	0.634	-0.066	-0.199	-1.252	-0.199	0.066	0.480	-0.336	-0.336	0.336	0.066	-1.003
-1.003	0.066	-0.066	0.199	-0.805	0.634	-0.066	-0.336	-1.252	-0.066	-0.066	0.480	-0.336	-0.066	-0.066	0.066	-0.805
-1.252	-0.199	-0.199	0.066	-1.003	0.336	-0.634	-0.480	-1.620	-0.336	-0.336	0.199	-1.003	-0.634	-0.066	-0.066	-0.634
-1.620	-1.252	-1.620	-1.252	-3.900	-0.480	-1.252	-1.620	-3.900	-1.252	-1.003	-0.634	-1.620	-3.900	-0.805	-1.620	-1.252
-1.620	-0.480	-1.003	-0.634	-1.620	0.066	-0.805	-1.252	-3.900	-0.805	-0.480	0.066	-1.003	-0.805	-0.066	-0.336	-1.252
-0.805	1.003	0.066	0.336	-0.634	1.252	0.066	-0.336	-3.900	0.480	0.336	0.805	-0.336	0.066	0.480	0.480	-0.634
-1.252	-0.480	-1.003	-0.805	-1.620	-0.480	-0.805	-1.252	-1.620	-0.805	-0.634	-0.336	-1.252	-1.003	-0.634	-0.805	-1.003
-0.805	0.199	-0.066	0.199	-0.634	0.634	0.066	-0.336	-1.003	0.199	-0.066	0.480	-0.480	-0.480	0.199	-0.066	-0.805
-0.336	1.003	1.003	1.252	0.066	1.620	0.634	0.199	-1.003	0.480	0.480	1.252	0.336	0.336	1.003	0.805	-0.199
0.634	3.900	1.252	1.620	0.805	3.900	3.900	0.634	-0.066	1.252	1.252	1.252	1.252	0.805	3.900	1.620	0.066
-0.805	0.480	-0.199	0.336	-0.634	0.480	-0.480	-0.199	-1.620	0.199	-0.199	0.336	-0.480	-0.634	0.336	0.066	-0.634
0.336	1.003	0.634	0.805	0.336	1.003	0.634	0.199	-0.199	0.634	0.336	0.805	0.199	0.336	0.634	0.480	-0.199
-1.620	-0.066	-0.480	-0.336	-3.900	0.066	-0.480	-0.805	-1.620	-0.336	-0.634	-0.066	-0.805	-0.634	-0.199	-0.805	-0.805
-0.480	1.003	0.480	0.480	-0.199	1.620	0.634	-0.199	-0.805	0.336	0.066	1.252	-0.199	0.199	1.003	0.480	-0.480
-3.900	-0.336	-0.634	-0.336	-1.252	0.199	-0.336	-0.805	-1.252	-0.805	-0.480	0.066	-0.805	-0.634	-0.199	-0.199	-0.634
0.0	1.003	0.480	0.805	-0.634	1.003	0.634	-0.199	-0.805	0.480	0.336	0.805	-0.066	0.199	0.805	0.634	-0.336
-3.900	0.0	-1.252	-1.003	-1.620	-0.336	-1.003	-1.252	-3.900	-0.805	-0.634	-0.336	-1.620	-1.620	-0.634	-0.634	-1.003
-1.252	-0.199	0.0	-0.634	-1.003	0.066	-0.634	-0.634	-1.252	-0.480	-0.480	0.066	-0.805	-0.805	-0.066	-0.199	-0.805
-3.900	-0.336	-1.003	0.0	-1.620	0.066	-1.003	-1.252	-3.900	-0.805	-0.634	-0.066	-1.003	-1.252	-0.199	-0.480	-1.003
-0.480	1.003	0.336	0.805	0.0	1.252	0.480	0.066	-0.480	0.634	0.199	0.805	0.066	0.199	0.805	0.480	-0.199
-3.900	-1.620	-3.900	-3.900	-3.900	0.0	-3.900	-3.900	-3.900	-3.900	-3.900	-0.805	-3.900	-3.900	-1.620	-1.620	-3.900
-1.620	0.066	-0.066	0.066	-1.620	0.336	0.0	-0.805	-3.900	-0.066	-0.634	0.066	-0.634	-0.480	0.199	-0.199	-0.634
-0.634	0.199	-0.336	-0.199	-0.634	0.336	0.066	0.0	-1.620	-0.199	-0.199	0.066	-0.336	-0.066	0.066	-0.066	-0.805
0.199	3.900	1.003	1.252	0.199	3.900	1.252	0.634	0.0	1.252	1.252	1.252	1.003	0.805	1.620	1.252	0.199
-1.620	-0.336	-0.199	-0.480	-1.003	0.199	-0.634	-1.003	-3.900	0.0	-0.634	0.066	-0.805	-0.634	-0.336	-0.336	-0.805
-1.003	-0.199	-0.336	-0.480	-0.805	-0.066	-0.480	-0.805	-1.620	-0.480	0.0	-0.066	-0.480	-0.336	-0.066	-0.480	-1.252
-1.252	-1.252	-1.620	-1.252	-1.252	-1.003	-1.252	-1.620	-1.620	-1.252	-1.252	0.0	-1.252	-1.252	-1.252	-1.252	-1.252
-0.634	0.634	0.199	0.336	-0.336	0.634	0.336	-0.066	-1.003	0.336	-0.199	0.634	0.0	-0.066	0.336	0.199	-0.634
-0.805	0.066	-0.066	0.199	-0.805	0.480	-0.336	-0.634	-1.003	0.066	-0.199	0.336	-0.634	0.0	0.199	-0.199	-0.634
-3.900	-0.634	-1.003	-0.805	-1.252	-0.480	-1.252	-1.252	-1.620	-0.805	-1.252	-0.480	-1.620	-0.805	0.0	-1.003	-1.252
-1.003	-0.336	-0.805	-0.480	-1.003	-0.066	-0.480	-0.805	-1.252	-0.199	-0.634	-0.066	-1.003	-1.003	-0.199	0.0	-1.003
0.066	1.003	0.336	0.634	-0.066	1.003	0.480	0.199	-0.336	0.634	0.634	1.003	0.336	0.199	1.003	0.805	0.0

CHECK ON CONSISTENCY OF JUDGES

0.0	0.220	0.122	0.204	0.311	0.232	0.133	-0.216	0.066	-0.177	-0.050	0.328	-0.133	0.300	-0.001	0.452
0.0	0.0	0.243	0.335	0.307	0.282	0.102	-0.305	0.131	0.003	-0.051	0.351	-0.091	0.261	-0.039	0.309
0.0	0.0	0.0	0.272	0.309	0.260	0.145	-0.206	0.175	-0.035	0.002	0.290	-0.034	0.343	-0.113	0.323
0.0	0.0	0.0	0.0	0.397	0.212	-0.020	-0.291	-0.050	-0.091	0.000	0.145	-0.048	0.254	-0.120	0.438
0.0	0.0	0.0	0.0	0.0	0.058	0.002	-0.100	0.003	0.000	0.0	-0.033	0.000	0.031	-0.052	0.022
0.0	0.0	0.0	0.0	0.0	0.0	0.007	-0.273	-0.057	-0.046	0.000	0.123	-0.052	0.100	-0.124	0.413
0.0	0.0	0.0	0.0	0.0	0.0	0.0	-0.218	-0.047	-0.022	-0.047	0.414	-0.114	0.352	0.007	0.341
0.0	0.0	0.0	0.0	0.0	0.0	0.0	0.0	0.249	0.026	0.002	0.573	-0.021	0.826	0.114	0.704
0.0	0.0	0.0	0.0	0.0	0.0	0.0	0.0	0.0	-0.144	-0.048	0.309	-0.068	0.446	-0.021	0.391
0.0	0.0	0.0	0.0	0.0	0.0	0.0	0.0	0.0	0.0	0.022	0.206	0.063	0.153	0.318	0.297
0.0	0.0	0.0	0.0	0.0	0.0	0.0	0.0	0.0	0.0	0.0	0.210	0.325	-0.000	0.139	0.053
0.0	0.0	0.0	0.0	0.0	0.0	0.0	0.0	0.0	0.0	0.0	0.0	-0.204	0.205	-0.156	0.208
0.0	0.0	0.0	0.0	0.0	0.0	0.0	0.0	0.0	0.0	0.0	0.0	0.0	0.210	0.314	0.262
0.0	0.0	0.0	0.0	0.0	0.0	0.0	0.0	0.0	0.0	0.0	0.0	0.0	0.0	-0.079	0.154
0.0	0.0	0.0	0.0	0.0	0.0	0.0	0.0	0.0	0.0	0.0	0.0	0.0	0.0	0.0	0.717
0.0	0.0	0.0	0.0	0.0	0.0	0.0	0.0	0.0	0.0	0.0	0.0	0.0	0.0	0.0	0.0
0.0	0.0	0.0	0.0	0.0	0.0	0.0	0.0	0.0	0.0	0.0	0.0	0.0	0.0	0.0	0.0
0.0	0.0	0.0	0.0	0.0	0.0	0.0	0.0	0.0	0.0	0.0	0.0	0.0	0.0	0.0	0.0
0.0	0.0	0.0	0.0	0.0	0.0	0.0	0.0	0.0	0.0	0.0	0.0	0.0	0.0	0.0	0.0
0.0	0.0	0.0	0.0	0.0	0.0	0.0	0.0	0.0	0.0	0.0	0.0	0.0	0.0	0.0	0.0
0.0	0.0	0.0	0.0	0.0	0.0	0.0	0.0	0.0	0.0	0.0	0.0	0.0	0.0	0.0	0.0
0.0	0.0	0.0	0.0	0.0	0.0	0.0	0.0	0.0	0.0	0.0	0.0	0.0	0.0	0.0	0.0
0.0	0.0	0.0	0.0	0.0	0.0	0.0	0.0	0.0	0.0	0.0	0.0	0.0	0.0	0.0	0.0
0.0	0.0	0.0	0.0	0.0	0.0	0.0	0.0	0.0	0.0	0.0	0.0	0.0	0.0	0.0	0.0
0.0	0.0	0.0	0.0	0.0	0.0	0.0	0.0	0.0	0.0	0.0	0.0	0.0	0.0	0.0	0.0
0.0	0.0	0.0	0.0	0.0	0.0	0.0	0.0	0.0	0.0	0.0	0.0	0.0	0.0	0.0	0.0
0.0	0.0	0.0	0.0	0.0	0.0	0.0	0.0	0.0	0.0	0.0	0.0	0.0	0.0	0.0	0.0
0.0	0.0	0.0	0.0	0.0	0.0	0.0	0.0	0.0	0.0	0.0	0.0	0.0	0.0	0.0	0.0
0.0	0.0	0.0	0.0	0.0	0.0	0.0	0.0	0.0	0.0	0.0	0.0	0.0	0.0	0.0	0.0
0.0	0.0	0.0	0.0	0.0	0.0	0.0	0.0	0.0	0.0	0.0	0.0	0.0	0.0	0.0	0.0
0.0	0.0	0.0	0.0	0.0	0.0	0.0	0.0	0.0	0.0	0.0	0.0	0.0	0.0	0.0	0.0
0.0	0.0	0.0	0.0	0.0	0.0	0.0	0.0	0.0	0.0	0.0	0.0	0.0	0.0	0.0	0.0
0.0	0.0	0.0	0.0	0.0	0.0	0.0	0.0	0.0	0.0	0.0	0.0	0.0	0.0	0.0	0.0
0.0	0.0	0.0	0.0	0.0	0.0	0.0	0.0	0.0	0.0	0.0	0.0	0.0	0.0	0.0	0.0
0.0	0.0	0.0	0.0	0.0	0.0	0.0	0.0	0.0	0.0	0.0	0.0	0.0	0.0	0.0	0.0

0.315	0.237	0.305	0.279	0.060	0.198	0.272	-0.053	-0.094	0.237	-0.078	0.188	-0.049	0.153	0.290	0.179	-0.115
-0.009	0.377	0.301	0.468	0.037	0.283	0.115	-0.133	-0.099	0.267	-0.214	0.278	-0.125	0.227	0.251	0.217	-0.055
-0.011	0.440	0.399	0.375	0.075	0.203	0.236	-0.040	-0.097	0.255	-0.119	0.297	-0.087	0.166	0.430	0.243	-0.086
-0.345	0.499	0.257	0.353	-0.010	0.368	0.236	-0.144	-0.051	0.173	-0.178	0.339	-0.018	0.178	0.314	0.131	-0.214
-0.092	0.155	0.013	0.109	0.001	0.098	-0.078	-0.051	0.000	-0.074	-0.156	0.018	-0.051	0.017	-0.090	-0.008	-0.105
-0.032	0.481	0.333	0.454	0.007	0.474	0.121	-0.029	0.000	0.142	-0.229	0.292	-0.099	0.054	0.151	0.046	-0.089
0.038	0.144	0.333	0.389	0.160	0.105	0.296	0.103	0.022	0.152	-0.132	0.199	0.050	0.241	0.269	0.193	-0.045
0.005	0.654	0.087	0.749	0.252	0.684	0.518	0.244	-0.043	0.536	0.113	0.606	0.156	0.502	0.650	0.585	-0.021
0.013	0.484	0.422	0.357	0.129	0.263	0.274	0.071	-0.140	0.237	-0.006	0.301	0.071	0.426	0.396	0.342	-0.016
0.249	0.157	0.151	0.101	0.291	0.053	0.242	0.269	0.022	0.297	0.180	0.105	0.103	0.335	0.195	0.198	0.205
0.232	-0.030	0.105	0.053	0.201	0.0	-0.000	0.356	0.229	0.105	0.100	0.105	0.095	0.210	-0.000	0.093	0.435
-0.119	0.213	0.291	0.269	-0.098	0.316	0.242	-0.224	-0.050	0.001	-0.203	0.190	-0.154	0.217	0.184	0.116	-0.204
0.216	0.150	0.202	0.210	0.301	0.198	0.259	0.470	-0.044	0.260	0.324	0.210	0.354	0.361	0.261	0.314	0.401
-0.337	0.290	0.127	0.349	0.047	0.474	-0.027	-0.150	-0.052	-0.041	-0.194	0.310	-0.165	-0.038	0.156	0.157	-0.159
0.348	0.154	0.240	0.310	0.184	0.053	0.180	0.230	-0.151	0.293	0.151	0.102	0.179	0.304	0.142	0.241	0.059
0.019	0.416	0.210	0.374	-0.051	0.421	-0.031	-0.141	-0.105	0.125	-0.236	0.279	-0.157	-0.014	0.186	-0.025	-0.249
0.0	0.156	0.244	0.207	0.423	0.158	0.209	0.307	-0.120	0.267	0.129	0.209	0.208	0.341	0.201	0.229	0.092
0.0	0.0	0.057	0.236	-0.044	0.432	-0.057	-0.094	0.000	-0.099	-0.249	0.159	-0.045	0.019	0.038	-0.118	-0.156
0.0	0.0	0.0	0.501	-0.095	0.474	0.077	-0.184	-0.105	0.044	-0.225	0.257	-0.149	0.061	0.159	0.092	-0.193
0.0	0.0	0.0	0.0	-0.240	0.474	-0.029	-0.089	0.000	-0.070	-0.243	0.110	-0.146	-0.013	-0.069	-0.115	-0.156
0.0	0.0	0.0	0.0	0.0	0.105	0.184	0.023	-0.282	0.183	-0.062	0.204	-0.021	0.243	0.180	0.225	-0.142
0.0	0.0	0.0	0.0	0.0	0.0	0.000	0.0	0.0	0.000	0.0	-0.210	0.0	0.0	-0.053	-0.053	0.0
0.0	0.0	0.0	0.0	0.0	0.0	0.0	-0.051	0.002	0.048	-0.086	0.386	-0.134	0.107	0.105	0.113	-0.219
0.0	0.0	0.0	0.0	0.0	0.0	0.0	0.0	-0.027	0.412	0.107	0.468	0.078	0.315	0.433	0.414	0.029
0.0	0.0	0.0	0.0	0.0	0.0	0.0	0.0	0.0	0.104	0.093	0.105	0.123	0.207	0.053	0.104	0.313
0.0	0.0	0.0	0.0	0.0	0.0	0.0	0.0	0.0	0.0	-0.100	0.375	-0.093	0.138	0.389	0.196	-0.171
0.0	0.0	0.0	0.0	0.0	0.0	0.0	0.0	0.0	0.0	0.0	0.515	0.103	0.399	0.480	0.558	0.113
0.0	0.0	0.0	0.0	0.0	0.0	0.0	0.0	0.0	0.0	0.0	0.0	-0.099	-0.043	0.172	0.025	-0.104
0.0	0.0	0.0	0.0	0.0	0.0	0.0	0.0	0.0	0.0	0.0	0.0	0.0	0.351	0.339	0.332	0.020
0.0	0.0	0.0	0.0	0.0	0.0	0.0	0.0	0.0	0.0	0.0	0.0	0.0	0.0	0.249	0.249	-0.197
0.0	0.0	0.0	0.0	0.0	0.0	0.0	0.0	0.0	0.0	0.0	0.0	0.0	0.0	0.0	0.139	-0.098
0.0	0.0	0.0	0.0	0.0	0.0	0.0	0.0	0.0	0.0	0.0	0.0	0.0	0.0	0.0	0.0	-0.131
0.0	0.0	0.0	0.0	0.0	0.0	0.0	0.0	0.0	0.0	0.0	0.0	0.0	0.0	0.0	0.0	0.0

AVERAGE DEVIATION 0.10712

PHASE II

NORMALIZED RELATIVE SIGNIFICANCE

GZN(1)	0.02967
GZN(2)	0.02254
GZN(3)	0.02613
GZN(4)	0.01277
GZN(5)	0.00010
GZN(6)	0.00530
GZN(7)	0.03913
GZN(8)	0.02793
GZN(9)	0.03614
GZN(10)	0.07768
GZN(11)	0.09540
GZN(12)	0.01489
GZN(13)	0.08953
GZN(14)	0.00411
GZN(15)	0.05667
GZN(16)	0.00483
GZN(17)	0.06461
GZN(18)	0.00071
GZN(19)	0.00554
GZN(20)	0.00105
GZN(21)	0.04654
GZN(22)	0.0
GZN(23)	0.01180
GZN(24)	0.04183
GZN(25)	0.09279
GZN(26)	0.01076
GZN(27)	0.03915
GZN(28)	0.00059
GZN(29)	0.04697
GZN(30)	0.01607
GZN(31)	0.00267
GZN(32)	0.00806
GZN(33)	0.06804

MATRIX P
PERCENTAGE OF TIMES PARAMETER I DUCED
MORE SIGNIFICANT THAN PARAMETER J

0.0	0.2105	0.3158	0.2632	0.4211	0.4211	0.2632	0.3684	0.2632	0.1579	0.2632	0.2632	0.0	0.3684	0.2105	0.3158
0.3684	0.0	0.4211	0.2632	0.6842	0.5263	0.3158	0.4737	0.2632	0.1579	0.3684	0.4211	0.0	0.3684	0.2632	0.5263
0.1053	0.1053	0.0	0.0526	0.4158	0.2632	0.0526	0.3158	0.1053	0.0526	0.2632	0.1579	0.0526	0.1579	0.1579	0.2105
0.3158	0.3684	0.4211	0.0	0.5789	0.3684	0.1053	0.4211	0.3158	0.1053	0.3158	0.2632	0.0526	0.2632	0.2105	0.4737
0.1053	0.0526	0.0526	0.0526	0.0	0.0526	0.0	0.2105	0.1053	0.0	0.2105	0.1053	0.0526	0.0526	0.0	0.1579
0.2632	0.2632	0.3158	0.2632	0.4211	0.0	0.0526	0.3684	0.2632	0.1579	0.3158	0.2105	0.0526	0.2632	0.0	0.3158
0.6316	0.5263	0.7895	0.5789	0.8421	0.7895	0.0	0.5789	0.4737	0.1579	0.3684	0.4211	0.0526	0.4737	0.3158	0.7895
0.2632	0.2105	0.3158	0.3158	0.4211	0.3158	0.2105	0.0	0.1053	0.0	0.2105	0.2105	0.0526	0.2632	0.1053	0.4211
0.4737	0.4211	0.4737	0.3684	0.6316	0.4737	0.3684	0.5263	0.0	0.0526	0.4211	0.3158	0.1053	0.2105	0.1579	0.5263
0.8421	0.7895	0.8947	0.8421	0.9474	0.8421	0.6842	0.9474	0.7895	0.0	0.4211	0.7368	0.3158	0.7895	0.5789	0.9474
0.6842	0.5789	0.6316	0.6316	0.6316	0.6316	0.5789	0.6316	0.4737	0.2105	0.0	0.5263	0.2105	0.4737	0.5263	0.6316
0.5789	0.4211	0.5789	0.5263	0.6316	0.5789	0.4211	0.4737	0.4211	0.0526	0.2632	0.0	0.1053	0.3158	0.1579	0.5789
0.9474	1.0000	0.9474	0.9474	0.9474	0.9474	0.8947	0.9474	0.7895	0.4211	0.5263	0.7368	0.0	0.7368	0.5789	0.8947
0.5263	0.4737	0.6316	0.4211	0.6316	0.5263	0.3158	0.5263	0.5263	0.0	0.3684	0.2632	0.1053	0.0	0.1579	0.6316
0.8842	0.8842	0.7895	0.7895	0.8947	0.8421	0.6789	0.8421	0.7368	0.2632	0.4211	0.5789	0.1579	0.5789	0.0	0.7368
0.2105	0.2105	0.2105	0.1053	0.3158	0.2105	0.1053	0.3684	0.2105	0.0526	0.2105	0.1579	0.0526	0.0526	0.1053	0.0
0.5263	0.5263	0.5789	0.4737	0.6842	0.5789	0.4211	0.5789	0.5263	0.1579	0.4211	0.3158	0.1053	0.2632	0.2105	0.4737
0.1053	0.1053	0.0526	0.0526	0.2105	0.0526	0.0	0.2105	0.0526	0.0526	0.1579	0.1053	0.0	0.1053	0.0	0.1579
0.3684	0.1579	0.3684	0.1579	0.4211	0.3158	0.1579	0.3684	0.2632	0.1053	0.2105	0.1053	0.0	0.2105	0.1579	0.2105
0.3158	0.1579	0.3158	0.1579	0.4211	0.3684	0.0	0.3158	0.1579	0.0526	0.2105	0.1579	0.0	0.1579	0.1579	0.3158
0.5263	0.4211	0.5789	0.5263	0.5789	0.5263	0.4737	0.5263	0.5263	0.2632	0.3684	0.4211	0.1579	0.4211	0.3158	0.5789
0.0526	0.0526	0.0526	0.0526	0.1053	0.0526	0.0	0.0526	0.0526	0.0	0.0	0.0	0.0	0.0	0.0526	0.0
0.3684	0.3158	0.4211	0.2632	0.4211	0.3684	0.3158	0.3684	0.2632	0.1579	0.3158	0.2105	0.0526	0.2632	0.1579	0.3684
0.5263	0.5789	0.5263	0.3158	0.7368	0.5789	0.4842	0.6316	0.2632	0.4737	0.5263	0.1053	0.4211	0.3158	0.6316
0.8421	0.8474	0.8474	0.8474	1.0000	1.0000	0.8421	0.8947	0.7895	0.4737	0.5263	0.7895	0.2105	0.7368	0.5263	0.8947
0.2105	0.3158	0.3158	0.2105	0.4211	0.2632	0.1579	0.3684	0.2632	0.0526	0.3158	0.2105	0.0526	0.2105	0.1053	0.3158
0.4211	0.4211	0.4737	0.4737	0.4737	0.4737	0.4737	0.5789	0.3684	0.2105	0.2158	0.3684	0.0526	0.3684	0.1579	0.4211
0.1053	0.1053	0.1053	0.1053	0.1053	0.1053	0.1579	0.1053	0.1053	0.1053	0.1053	0.0526	0.0	0.1053	0.1053	0.1053
0.3158	0.3684	0.3684	0.3684	0.4211	0.4211	0.3158	0.3684	0.2632	0.1053	0.2105	0.3158	0.0526	0.2632	0.1579	0.3684
0.3158	0.3684	0.3684	0.3158	0.3684	0.3684	0.3158	0.4211	0.3158	0.2105	0.2105	0.2632	0.0526	0.2105	0.1053	0.3158
0.1053	0.1579	0.1579	0.0526	0.1579	0.1053	0.1053	0.1579	0.1053	0.0	0.1579	0.1053	0.0526	0.0	0.1053	0.1053
0.2632	0.2105	0.3158	0.2632	0.3684	0.3158	0.1579	0.2105	0.1579	0.1053	0.1053	0.1579	0.0	0.2105	0.1053	0.3684
0.8421	0.8947	0.9474	0.8947	0.9474	0.8947	0.8947	0.8947	0.8421	0.4737	0.5789	0.6842	0.3684	0.7368	0.5789	0.8947

0.2632 0.4737 0.2105 0.3684 0.2632 0.5789 0.3684 0.2105 0.0526 0.3684 0.3684 0.5263 0.3684 0.4211 0.4211 0.4211 0.0526
0.2632 0.5316 0.4737 0.5789 0.3158 0.6842 0.4737 0.3684 0.0526 0.4211 0.4211 0.6316 0.3684 0.4211 0.5263 0.5789 0.1053
0.0526 0.4211 0.2105 0.3158 0.2105 0.4737 0.2632 0.1579 0.0526 0.2105 0.3158 0.3684 0.2632 0.3158 0.2632 0.3684 0.0526
0.2105 0.5263 0.4211 0.4737 0.2105 0.5789 0.4211 0.1579 0.0526 0.2632 0.3684 0.5263 0.3684 0.4211 0.4737 0.4737 0.0526
0.0526 0.2105 0.1579 0.2105 0.1579 0.4737 0.2105 0.0526 0.0 0.1579 0.1579 0.3684 0.2105 0.2105 0.3158 0.2105 0.0526
0.2105 0.4211 0.2632 0.3158 0.2105 0.5263 0.2632 0.1053 0.0 0.1684 0.3158 0.4737 0.2632 0.2632 0.4737 0.3684 0.1053
0.4737 0.8947 0.6316 0.6842 0.4737 0.8947 0.5789 0.2105 0.0 0.6316 0.4737 0.7895 0.5263 0.6316 0.7895 0.7368 0.0526
0.2105 0.4211 0.3158 0.3684 0.2105 0.4737 0.3158 0.1053 0.0526 0.4211 0.2632 0.4737 0.2105 0.3158 0.4211 0.3684 0.1053
0.3158 0.6842 0.4737 0.6316 0.3158 0.6842 0.5263 0.2105 0.1053 0.5263 0.4737 0.6316 0.4211 0.4211 0.5789 0.6316 0.1053
0.8421 0.9474 0.7368 0.8421 0.6842 0.9474 0.7895 0.5263 0.1684 0.7895 0.6842 0.8421 0.7368 0.6842 0.9474 0.8421 0.3684
0.5263 0.6842 0.7368 0.6842 0.4737 0.7368 0.6316 0.5263 0.3684 0.5263 0.4737 0.6842 0.5263 0.5263 0.6316 0.7368 0.2632
0.3684 0.6316 0.5263 0.5789 0.3158 0.6316 0.4211 0.2105 0.1053 0.4737 0.3684 0.5789 0.3684 0.3684 0.6316 0.5789 0.1053
0.8421 1.0000 0.9474 0.9474 0.6842 1.0000 0.9474 0.6316 0.4737 0.8421 0.7895 0.8947 0.7895 0.7895 0.9474 1.0000 0.4211
0.3158 0.6842 0.5789 0.5789 0.3158 0.6842 0.5263 0.1579 0.1053 0.4211 0.4737 0.6842 0.4211 0.4737 0.6316 0.5263 0.1579
0.6316 0.8947 0.7368 0.7368 0.5789 0.8947 0.8421 0.4211 0.1579 0.6842 0.5789 0.8421 0.6842 0.6842 0.8421 0.7895 0.2105
0.0 0.3158 0.2105 0.2632 0.1579 0.4211 0.2632 0.0526 0.0526 0.1053 0.2632 0.4211 0.2632 0.3684 0.2632 0.3684 0.0526
0.0 0.7368 0.5789 0.6316 0.2105 0.7368 0.6316 0.2105 0.1053 0.4211 0.4737 0.6842 0.4737 0.4737 0.6316 0.6842 0.1053
0.0 0.0 0.1053 0.1053 0.2632 0.1579 0.0526 0.0 0.2105 0.2105 0.3158 0.1053 0.0526 0.2105 0.1053 0.0
0.1053 0.3684 0.0 0.2105 0.1053 0.4211 0.1579 0.1579 0.0526 0.3158 0.3158 0.5263 0.2632 0.2632 0.4211 0.4211 0.0
0.0 0.4211 0.2105 0.0 0.0 0.4737 0.1053 0.0526 0.0 0.2105 0.3158 0.5263 0.2632 0.2105 0.4211 0.2632 0.0
0.4211 0.6316 0.6316 0.6316 0.0 0.6842 0.4211 0.3684 0.2632 0.4737 0.4211 0.6316 0.4737 0.4211 0.6842 0.6316 0.2105
0.0 0.1053 0.0526 0.0526 0.0 0.0 0.0 0.0 0.0 0.0526 0.1053 0.2105 0.0 0.0526 0.1053 0.1053 0.0526
0.2105 0.4737 0.4211 0.4211 0.2105 0.5263 0.0 0.2105 0.1053 0.3158 0.3158 0.4737 0.3158 0.3158 0.5263 0.4211 0.1053
0.4737 0.7895 0.6316 0.6842 0.5263 0.7895 0.6316 0.0 0.1053 0.5789 0.5263 0.7368 0.6316 0.6842 0.7368 0.6842 0.2632
0.7368 1.0000 0.8947 0.8421 0.6316 1.0000 0.8421 0.5263 0.0 0.8421 0.6842 0.8947 0.7895 0.8421 0.8947 0.9474 0.3158
0.1579 0.3684 0.3684 0.3684 0.2632 0.4737 0.3684 0.0526 0.0526 0.0 0.2105 0.3684 0.3158 0.3684 0.3158 0.3684 0.1053
0.3684 0.5263 0.4737 0.5789 0.3158 0.6316 0.4737 0.2632 0.0526 0.3684 0.0 0.4737 0.4211 0.4211 0.5263 0.5789 0.1579
0.1053 0.1053 0.0526 0.1053 0.1053 0.1579 0.1053 0.0526 0.0526 0.1053 0.0526 0.0 0.1053 0.1053 0.1053 0.1053 0.0526
0.2632 0.5263 0.4211 0.4737 0.2632 0.5789 0.4211 0.1579 0.0526 0.4211 0.3158 0.5263 0.0 0.3158 0.4737 0.4211 0.1579
0.2105 0.4737 0.4211 0.4737 0.1579 0.5263 0.3158 0.1579 0.0526 0.3684 0.2632 0.4737 0.1579 0.0 0.4737 0.4211 0.1053
0.0 0.1579 0.1053 0.1579 0.0526 0.2105 0.1053 0.0526 0.1053 0.1053 0.1579 0.2632 0.1053 0.1579 0.0 0.1579 0.0
0.3526 0.3684 0.2105 0.2632 0.1053 0.4211 0.3158 0.0526 0.0 0.3684 0.2105 0.4737 0.2632 0.1579 0.3684 0.0 0.0
0.7895 0.9474 0.8421 0.9474 0.5789 0.9474 0.8421 0.5263 0.4211 0.7368 0.5789 0.8947 0.7895 0.7895 0.9474 1.0000 0.0

MATRIX Z
BASIC TRANSFORMATION MATRIX

0.0	-0.805	-0.480	-0.634	-0.199	-0.199	-0.634	-0.336	-0.634	-1.003	-0.634	-0.634	-3.900	-0.336	-0.805	-0.480
-0.336	0.0	-0.199	-0.634	0.480	0.066	-0.480	-0.066	-0.634	-1.003	-0.336	-0.199	-3.900	-0.336	-0.634	0.066
-1.252	-1.252	0.0	-1.620	-0.480	-0.634	-1.620	-0.480	-1.252	-1.620	-0.634	-1.003	-1.620	-1.003	-1.003	-0.805
-0.480	-0.336	-0.199	0.0	0.199	-0.336	-1.252	-0.199	-0.480	-1.252	-0.480	-0.634	-1.620	-0.634	-0.805	-0.066
-1.252	-1.620	-1.620	-1.620	0.0	-1.620	-3.900	-0.805	-1.252	-3.900	-0.805	-1.252	-1.620	-1.620	-3.900	-1.003
-0.634	-0.634	-0.480	-0.634	-0.199	0.0	-1.620	-0.336	-0.634	-1.003	-0.480	-0.805	-1.620	-0.634	-3.900	-0.480
0.336	0.066	0.336	0.199	1.003	0.805	0.0	0.199	-0.066	-1.003	-0.336	-0.199	-1.620	-0.066	-0.480	0.805
-0.634	-0.805	-0.480	-0.480	-0.199	-0.480	-0.805	0.0	-1.252	-3.900	-0.805	-0.805	-1.620	-0.634	-1.252	-0.199
-0.336	-0.199	-0.066	-0.336	0.336	-0.066	-0.336	0.066	0.0	-1.620	-0.199	-0.480	-1.252	-0.805	-1.003	0.066
1.003	0.805	1.252	1.003	1.620	1.003	0.480	1.620	0.805	0.0	-0.199	0.634	-0.480	0.805	0.199	1.620
0.480	0.199	0.336	0.336	0.336	0.336	0.199	0.336	-0.066	-0.805	0.0	0.066	-0.805	-0.066	0.066	0.336
0.199	-0.199	0.199	0.336	0.336	0.199	-0.199	-0.066	-0.199	-1.620	-0.634	0.0	-1.252	-0.480	-1.003	0.199
1.620	0.966	1.620	1.620	1.620	1.620	1.252	1.620	0.805	-0.199	0.805	0.634	0.0	0.634	0.199	1.252
0.336	-0.066	0.336	-0.199	0.336	0.066	-0.480	0.066	0.066	-3.900	-0.336	-0.634	-1.252	0.0	-1.003	0.336
0.480	0.480	0.805	0.634	1.252	1.003	0.199	1.003	0.634	-0.634	-0.199	0.199	-1.003	0.199	0.0	0.634
-0.805	-0.805	-0.805	-1.252	-0.480	-0.805	-1.252	-0.336	-0.805	-1.620	-0.805	-1.003	-1.620	-1.620	-1.252	0.0
0.066	0.066	0.199	-0.066	0.480	0.199	-0.199	0.199	0.066	-1.003	-0.199	-0.480	-1.252	-0.634	-0.805	-0.066
-1.252	-1.252	-1.252	-1.620	-0.805	-1.620	-3.900	-0.805	-1.620	-1.620	-1.003	-1.252	-3.900	-1.252	-3.900	-1.003
-0.336	-1.003	-0.336	-1.003	-0.199	-0.480	-1.003	-0.336	-0.634	-1.252	-0.805	-1.252	-3.900	-0.805	-1.003	-0.805
-0.480	-1.003	-0.480	-1.003	-0.199	-0.336	-1.900	-0.480	-1.003	-1.620	-0.805	-1.003	-3.900	-1.003	-1.003	-0.480
0.066	-0.199	0.199	0.066	0.199	0.066	-0.066	0.066	0.066	-0.634	-0.336	-0.199	-1.003	-0.199	-0.480	0.199
-1.620	-1.620	-1.620	-1.620	-1.252	-1.620	-3.900	-1.620	-1.620	-3.900	-3.900	-3.900	-3.900	-3.900	-1.620	-3.900
-0.336	-0.480	-0.199	-0.634	-0.199	-0.336	-0.480	-0.336	-0.634	-1.003	-0.480	-0.805	-1.620	-0.634	-1.003	-0.336
0.066	0.199	0.480	0.336	0.805	0.634	0.199	0.480	0.336	-0.634	-0.066	0.066	-1.252	-0.199	-0.480	0.336
1.003	1.620	1.620	1.620	3.900	3.900	1.003	1.252	0.805	-0.066	0.066	0.805	-0.805	0.634	0.066	1.252
-0.805	-0.480	-0.480	-0.805	-0.199	-0.634	-1.003	-0.336	-0.634	-1.620	-0.480	-0.805	-1.620	-0.805	-1.252	-0.480
-0.199	-0.199	-0.066	-0.066	-0.066	-0.066	-0.066	0.199	-0.336	-0.805	-0.480	-0.336	-1.620	-0.336	-1.003	-0.199
-1.252	-1.252	-1.252	-1.252	-1.252	-1.252	-1.003	-1.252	-1.252	-1.252	-1.620	-3.900	-1.252	-1.252	-1.252	-1.252
-0.480	-0.336	-0.336	-0.336	-0.199	-0.199	-0.480	-0.336	-0.634	-1.252	-0.805	-0.480	-1.620	-0.634	-1.003	-0.336
-0.480	-0.336	-0.336	-0.480	-0.336	-0.336	-0.480	-0.199	-0.480	-0.805	-0.805	-0.634	-1.620	-0.805	-1.252	-0.480
-1.252	-1.003	-1.003	-1.620	-1.003	-1.252	-1.252	-1.003	-1.252	-3.900	-1.003	-1.252	-1.620	-3.900	-1.252	-1.252
-0.634	-0.805	-0.480	-0.634	-0.336	-0.480	-1.003	-0.805	-1.003	-1.252	-1.252	-1.003	-3.900	-0.805	-1.252	-0.336
1.003	1.252	1.620	1.252	1.620	1.252	1.252	1.252	1.003	-0.066	0.199	0.480	-0.336	0.634	0.199	1.252

-0.634	-0.066	-0.805	-0.336	-0.634	0.199	-0.336	-0.805	-1.620	-0.336	-0.336	0.066	-0.336	-0.199	-0.199	-0.199	-1.620
-0.634	0.336	-0.336	0.199	-0.480	0.480	-0.066	-0.336	-1.620	-0.199	-0.199	0.336	-0.336	-0.199	0.066	0.199	-1.252
-1.620	-0.199	-0.805	-0.480	-0.805	-0.066	-0.634	-1.003	-1.620	-0.805	-0.480	-0.336	-0.634	-0.480	-0.634	-0.336	-1.620
-0.805	0.066	-0.199	-0.066	-0.805	0.199	-0.199	-1.003	-1.620	-0.634	-0.336	0.066	-0.336	-0.199	-0.066	-0.066	-1.620
-1.620	-0.805	-1.003	-0.805	-1.003	-0.066	-0.805	-1.620	-3.900	-1.003	-1.003	-0.336	-0.805	-0.805	-0.480	-0.805	-1.620
-0.805	-0.199	-0.634	-0.480	-0.805	0.066	-0.634	-1.252	-3.900	-0.336	-0.480	-0.066	-0.634	-0.634	-0.066	-0.336	-1.252
-0.336	1.252	0.336	0.480	-0.066	1.252	0.199	-0.805	-3.900	0.336	-0.066	0.805	0.066	0.336	0.805	0.634	-1.620
-0.805	-0.199	-0.480	-0.336	-0.805	-0.066	-0.480	-1.252	-1.620	-0.199	-0.634	-0.066	-0.805	-0.480	-0.199	-0.336	-1.252
-0.336	0.480	-0.066	0.336	-0.480	0.480	0.066	-0.805	-1.252	0.066	-0.066	0.336	-0.199	-0.199	0.199	0.336	-1.252
1.003	1.252	1.252	1.620	0.480	1.620	0.805	0.066	-0.336	0.805	0.480	1.003	0.634	0.480	1.620	1.003	-0.336
0.066	0.480	0.634	0.480	-0.066	0.634	0.336	0.066	-0.336	0.066	-0.066	0.480	0.066	0.066	0.336	0.634	-0.634
-0.336	0.336	0.066	0.199	-0.480	0.336	-0.199	-0.805	-1.252	-0.066	-0.336	0.199	-0.336	-0.336	0.336	0.199	-1.252
1.003	3.900	1.620	1.620	0.480	3.900	1.620	0.336	-0.066	1.003	0.805	1.252	0.805	0.805	1.620	3.900	-0.199
-0.480	0.480	0.199	0.199	-0.480	0.634	0.066	-1.003	-1.252	-0.199	-0.066	0.480	-0.199	-0.066	0.336	0.066	-1.003
0.336	1.252	0.634	0.634	0.199	1.252	1.003	-0.199	-1.003	0.480	0.199	1.003	0.480	0.480	1.003	0.805	-0.805
-3.900	-0.480	-0.805	-0.634	-1.003	-0.199	-0.634	-1.620	-1.620	-1.252	-0.634	-0.199	-0.634	-0.336	-0.634	-0.336	-1.620
0.0	0.634	0.199	0.336	-0.805	0.634	0.066	-0.805	-1.252	-0.199	-0.066	0.480	-0.066	-0.066	0.336	0.480	-1.252
-3.900	0.0	-1.252	-1.252	-1.252	-0.634	-1.003	-1.620	-3.900	-0.805	-0.805	-0.480	-1.252	-1.620	-0.805	-1.252	-3.900
-1.252	-0.336	0.0	-0.805	-1.252	-0.199	-1.003	-1.003	-1.620	-0.480	-0.480	0.066	-0.634	-0.634	-0.199	-0.199	-3.900
-3.900	-0.199	-0.805	0.0	-3.900	-0.066	-1.252	-1.620	-3.900	-0.805	-0.480	0.066	-0.634	-0.805	-0.199	-0.634	-3.900
-0.199	0.336	0.336	0.336	0.0	0.480	-0.199	-0.336	-0.634	-0.066	-0.199	0.336	-0.066	-0.199	0.480	0.336	-0.805
-3.900	-1.252	-1.620	-1.620	-3.900	0.0	-3.900	-3.900	-3.900	-1.620	-1.252	-0.805	-3.900	-1.620	-1.252	-1.252	-1.620
-0.199	-0.336	-0.199	-0.199	-0.805	0.066	0.0	-0.805	-1.252	-0.480	-0.480	-0.066	-0.480	-0.480	0.066	-0.199	-1.252
-0.066	0.805	0.336	0.480	0.066	0.805	0.336	0.0	-1.252	0.199	0.066	0.634	0.336	0.480	0.634	0.480	-0.634
0.634	3.900	1.252	1.003	0.336	3.900	1.003	0.066	0.0	1.003	0.480	1.252	0.805	1.003	1.252	1.620	-0.480
-1.003	-0.336	-0.336	-0.336	-0.634	-0.066	-0.336	-1.620	-1.620	0.0	-0.805	-0.336	-0.480	-0.336	-0.480	-0.336	-1.252
-0.336	0.066	-0.066	0.199	-0.480	0.336	-0.066	-0.634	-1.620	-0.336	0.0	-0.066	-0.199	-0.199	0.066	0.199	-1.003
-1.252	-1.252	-1.620	-1.252	-1.252	-1.003	-1.252	-1.620	-1.620	-1.252	-1.620	0.0	-1.252	-1.252	-1.252	-1.252	-1.620
-0.634	0.066	-0.199	-0.066	-0.634	0.199	-0.199	-1.003	-1.620	-0.199	-0.480	0.066	0.0	-0.480	-0.066	-0.199	-1.003
-0.805	-0.066	-0.199	-0.066	-1.003	0.066	-0.480	-1.003	-1.620	-0.336	-0.634	-0.066	-1.003	0.0	-0.066	-0.199	-1.252
-3.900	-1.003	-1.252	-1.003	-1.620	-0.805	-1.252	-1.620	-1.252	-1.252	-1.003	-0.634	-1.252	-1.003	0.0	-1.003	-3.900
-1.620	-0.634	-0.805	-0.634	-1.252	-0.199	-0.480	-1.620	-3.900	-0.336	-0.805	-0.066	-0.634	-1.003	-0.336	0.0	-3.900
0.805	1.620	1.003	1.620	0.199	1.620	1.003	0.066	-0.199	0.634	0.199	1.252	0.805	0.805	1.620	3.900	0.0

CHECK ON CONSISTENCY OF JUDGES

0.0	0.282	0.331	0.428	0.579	0.482	-0.074	0.206	0.039	-0.195	-0.263	0.300	0.000	0.443	-0.169	0.418
0.0	0.0	0.233	0.435	0.315	0.379	-0.122	0.107	0.045	-0.155	-0.358	0.149	0.000	0.448	-0.220	0.469
0.0	0.0	0.0	0.496	0.683	0.558	0.052	0.109	0.079	-0.052	-0.283	0.256	-0.052	0.536	-0.141	0.659
0.0	0.0	0.0	0.0	0.419	0.419	-0.022	-0.044	-0.162	-0.105	-0.216	0.104	-0.053	0.385	-0.158	0.368
0.0	0.0	0.0	0.0	0.0	-0.034	0.000	-0.210	-0.105	0.0	-0.211	-0.105	-0.053	-0.046	0.000	-0.170
0.0	0.0	0.0	0.0	0.0	0.0	-0.038	-0.235	-0.229	-0.158	-0.316	-0.053	-0.053	0.077	0.001	0.256
0.0	0.0	0.0	0.0	0.0	0.0	0.0	0.270	0.167	-0.127	-0.385	0.430	-0.051	0.487	-0.119	0.202
0.0	0.0	0.0	0.0	0.0	0.0	0.0	0.0	0.134	-0.052	-0.210	0.279	-0.053	0.494	-0.079	0.445
0.0	0.0	0.0	0.0	0.0	0.0	0.0	0.0	0.0	-0.040	-0.420	0.436	-0.105	0.709	-0.046	0.452
0.0	0.0	0.0	0.0	0.0	0.0	0.0	0.0	0.0	0.0	-0.209	0.261	-0.104	0.210	0.255	0.053
0.0	0.0	0.0	0.0	0.0	0.0	0.0	0.0	0.0	0.0	0.0	0.474	0.164	0.526	0.438	0.369
0.0	0.0	0.0	0.0	0.0	0.0	0.0	0.0	0.0	0.0	0.0	0.0	-0.105	0.459	-0.129	0.331
0.0	0.0	0.0	0.0	0.0	0.0	0.0	0.0	0.0	0.0	0.0	0.0	0.0	0.263	0.404	0.105
0.0	0.0	0.0	0.0	0.0	0.0	0.0	0.0	0.0	0.0	0.0	0.0	0.0	0.0	-0.153	0.100
0.0	0.0	0.0	0.0	0.0	0.0	0.0	0.0	0.0	0.0	0.0	0.0	0.0	0.0	0.0	0.263
0.0	0.0	0.0	0.0	0.0	0.0	0.0	0.0	0.0	0.0	0.0	0.0	0.0	0.0	0.0	0.0

-0.183	0.521	0.731	0.023	-0.103	0.421	0.348	-0.073	-0.053	0.420	-0.065	0.471	-0.091	0.244	0.568	0.493	-0.040
-0.180	0.307	0.441	0.411	-0.151	0.316	0.248	-0.227	-0.053	0.373	-0.121	0.366	-0.095	0.259	0.403	0.328	-0.100
-0.015	0.574	0.668	0.465	-0.125	0.526	0.314	-0.007	-0.053	0.454	-0.105	0.523	-0.097	0.293	0.700	0.454	-0.051
-0.102	0.467	0.362	0.501	-0.143	0.421	0.107	-0.102	-0.053	0.355	-0.226	0.461	-0.231	0.049	0.409	0.315	-0.052
-0.053	0.131	-0.137	-0.034	-0.158	0.526	-0.206	-0.053	0.0	-0.151	-0.158	-0.106	-0.210	-0.209	-0.180	-0.192	-0.053
-0.207	0.532	0.257	0.581	-0.200	0.474	-0.029	-0.057	0.0	-0.054	-0.265	0.453	-0.234	-0.071	0.364	0.134	-0.105
-0.172	0.105	0.350	0.315	-0.017	0.105	0.348	0.206	0.001	0.322	0.149	0.210	0.087	0.273	0.210	0.249	-0.008
-0.154	0.370	0.362	0.520	-0.092	0.526	0.334	-0.005	-0.053	0.313	-0.039	0.521	0.008	0.278	0.561	0.499	-0.102
-0.021	0.313	0.493	0.367	0.002	0.316	0.336	0.074	-0.105	0.291	0.006	0.368	0.051	0.407	0.419	0.334	-0.046
0.000	0.105	0.105	0.052	0.276	0.053	0.210	0.425	-0.269	0.210	0.201	0.158	0.247	0.215	0.053	0.158	0.157
0.000	0.313	0.203	0.316	0.521	0.263	0.368	0.467	-0.053	0.474	0.525	0.316	0.472	0.474	0.369	0.263	0.569
-0.109	0.366	0.337	0.410	-0.191	0.368	0.239	-0.105	-0.105	0.266	-0.126	0.416	-0.142	0.236	0.351	0.295	-0.102
0.191	0.0	0.053	0.053	0.314	0.0	0.053	0.366	-0.038	0.153	0.210	0.105	0.210	0.211	0.053	-0.000	0.479
-0.305	0.297	0.101	0.153	-0.226	0.263	-0.149	-0.134	-0.105	0.046	-0.401	0.284	-0.351	-0.151	0.287	0.136	-0.158
-0.091	0.105	0.262	0.263	0.198	0.105	0.147	0.319	-0.147	0.210	0.299	0.158	0.189	0.300	0.158	0.209	-0.012
0.302	0.614	0.230	0.566	-0.192	0.579	-0.087	-0.048	-0.053	0.137	-0.244	0.472	-0.245	-0.228	0.519	0.053	-0.053
0.0	0.263	0.413	0.198	0.448	0.263	0.449	0.411	-0.101	0.565	0.323	0.316	0.317	0.492	0.368	0.312	0.014
0.0	0.0	-0.053	0.197	-0.105	0.737	-0.130	-0.053	0.0	-0.106	-0.210	0.055	-0.105	-0.047	0.034	-0.098	0.0
0.0	0.0	0.0	0.554	-0.096	0.579	0.069	-0.151	-0.053	-0.025	-0.289	0.392	-0.237	-0.096	0.493	0.069	0.000
0.0	0.0	0.0	0.0	0.000	0.526	-0.075	-0.052	0.0	-0.141	-0.215	0.089	-0.262	-0.189	0.010	-0.138	0.000
0.0	0.0	0.0	0.0	0.0	0.316	0.520	0.093	-0.262	0.490	0.243	0.368	0.183	0.501	0.315	0.392	-0.154
0.0	0.0	0.0	0.0	0.0	0.0	0.0	0.0	0.0	-0.053	-0.105	-0.211	0.0	-0.053	-0.105	-0.105	-0.053
0.0	0.0	0.0	0.0	0.0	0.0	0.0	-0.102	-0.105	0.275	-0.189	0.512	-0.193	0.125	0.430	0.347	-0.104
0.0	0.0	0.0	0.0	0.0	0.0	0.0	0.0	-0.104	0.332	0.172	0.263	0.060	0.251	0.263	0.307	-0.145
0.0	0.0	0.0	0.0	0.0	0.0	0.0	0.0	0.0	0.158	0.316	0.105	0.210	0.158	0.105	0.053	0.610
0.0	0.0	0.0	0.0	0.0	0.0	0.0	0.0	0.0	0.0	-0.126	0.606	-0.234	-0.015	0.615	0.323	-0.105
0.0	0.0	0.0	0.0	0.0	0.0	0.0	0.0	0.0	0.0	0.0	0.526	0.071	0.419	0.472	0.391	-0.136
0.0	0.0	0.0	0.0	0.0	0.0	0.0	0.0	0.0	0.0	0.0	0.0	-0.105	-0.095	0.216	-0.031	-0.053
0.0	0.0	0.0	0.0	0.0	0.0	0.0	0.0	0.0	0.0	0.0	0.0	0.0	0.529	0.524	0.550	-0.135
0.0	0.0	0.0	0.0	0.0	0.0	0.0	0.0	0.0	0.0	0.0	0.0	0.0	0.0	0.495	0.389	-0.104
0.0	0.0	0.0	0.0	0.0	0.0	0.0	0.0	0.0	0.0	0.0	0.0	0.0	0.0	0.0	0.006	0.000
0.0	0.0	0.0	0.0	0.0	0.0	0.0	0.0	0.0	0.0	0.0	0.0	0.0	0.0	0.0	0.0	0.000
0.0	0.0	0.0	0.0	0.0	0.0	0.0	0.0	0.0	0.0	0.0	0.0	0.0	0.0	0.0	0.0	0.0

AVERAGE DEVIATION 0.23790

PHASE III

NORMALIZED RELATIVE SIGNIFICANCE

GZN(1)	0.01454
GZN(2)	0.01497
GZN(3)	0.00746
GZN(4)	0.00586
GZN(5)	0.00000
GZN(6)	0.00088
GZN(7)	0.04444
GZN(8)	0.01061
GZN(9)	0.03020
GZN(10)	0.10269
GZN(11)	0.10737
GZN(12)	0.01113
GZN(13)	0.10786
GZN(14)	0.00252
GZN(15)	0.07954
GZN(16)	0.00049
GZN(17)	0.06665
GZN(18)	0.00000
GZN(19)	0.00076
GZN(20)	0.00002
GZN(21)	0.04927
GZN(22)	0.0
GZN(23)	0.00506
GZN(24)	0.05344
GZN(25)	0.10798
GZN(26)	0.00305
GZN(27)	0.03208
GZN(28)	0.00001
GZN(29)	0.03282
GZN(30)	0.00681
GZN(31)	0.00004
GZN(32)	0.00087
GZN(33)	0.10058

Appendix III, 2: Normalized cumulative relative significance values - PHASE I

Phase 1

The Ranked	Values Are		The Cumulated	Values Are
1	.06445	13	1	.00003	22
2	.05784	25	2	.03822	28
3	.05770	11	3	.01781	20
4	.05577	8	4	.03008	19
5	.05101	10	5	.04243	5
6	.05014	27	6	.05660	18
7	.04562	17	7	.07382	16
8	.04375	24	8	.08671	14
9	.04308	33	9	.10355	12
10	.04187	29	10	.12094	31
11	.04141	15	11	.14066	32
12	.03615	9	12	.16259	23
13	.03338	7	13	.18469	30
14	.03107	3	14	.20789	4
15	.02991	21	15	.23278	6
16	.02797	26	16	.25949	1
17	.02778	2	17	.28827	2
18	.02771	1	18	.31624	26
19	.02489	6	19	.34615	21
20	.02320	4	20	.37782	3
21	.02210	30	21	.41120	7
22	.02193	23	22	.44735	9
23	.01972	32	23	.48876	15
24	.01739	31	24	.53064	29
25	.01664	12	25	.57372	33
26	.01589	14	26	.61747	24
27	.01422	16	27	.66309	17
28	.01417	18	28	.71323	27
29	.01235	5	29	.76424	10
30	.01227	19	30	.82001	8
31	.00959	20	31	.87771	11
32	.00819	28	32	.93555	25
33	.00003	22	33	1.00000	13

Appendix III, 2: Normalized cumulative relative significance values - PHASE II

Phase 2

The Ranked Values Are		The Cumulated Values Are	
1	.09540	1 0.	22
2	.09279	2 .	5
3	.09053	3 .00010	28
4	.07768	4 .00069	18
5	.06804	5 .00140	20
6	.06461	6 .00245	31
7	.05567	7 .00512	14
8	.04697	8 .00923	15
9	.04654	9 .01406	6
10	.04183	10 .01936	19
11	.03915	11 .02490	32
12	.03813	12 .03296	26
13	.03614	13 .04372	23
14	.02967	14 .05552	4
15	.02793	15 .06829	12
16	.02613	16 .08318	30
17	.02454	17 .09925	2
18	.01607	18 .12179	3
19	.01489	19 .14792	8
20	.01277	20 .17585	1
21	.01180	21 .20552	9
22	.01076	22 .24166	7
23	.00836	23 .28079	27
24	.00554	24 .31994	24
25	.00530	25 .36177	21
26	.00483	26 .40831	29
27	.00411	27 .45528	15
28	.00267	28 .51195	17
29	.00105	29 .57656	33
30	.00071	30 .64460	10
31	.00059	31 .72228	13
32	.00010	32 .81181	25
33	0.	33 .90460	11
		1.00000	

Appendix III, 2: Normalized cumulative relative significance values - PHASE III

Phase 3

The Ranked Values Are		The Cumulated Values Are	
1	.10798 25	1	0. 22
2	.10786 13	2	0. 18
3	.10737 11	3	0. 5
4	.10259 10	4	.00001 28
5	.10058 33	5	.00003 20
6	.07754 15	6	.00007 31
7	.06665 17	7	.00056 16
8	.05344 24	8	.00132 19
9	.04937 21	9	.00219 32
10	.04445 7	10	.00307 6
11	.03282 29	11	.00559 14
12	.03208 27	12	.00864 26
13	.03029 9	13	.01370 23
14	.01497 2	14	.01956 4
15	.01454 1	15	.02637 30
16	.01113 12	16	.03383 3
17	.01051 8	17	.04444 8
18	.00746 3	18	.05557 12
19	.00681 30	19	.07011 1
20	.00586 4	20	.08508 2
21	.00506 23	21	.11528 9
22	.00305 26	22	.14736 27
23	.00252 14	23	.18018 29
24	.00088 6	24	.22462 7
25	.00087 32	25	.27389 21
26	.00076 19	26	.32733 24
27	.00049 16	27	.39398 17
28	.00004 31	28	.47352 15
29	.00002 20	29	.57410 33
30	.00001 28	30	.67679 10
31	0. 5	31	.78416 11
32	0. 18	32	.89202 13
33	0. 22	33	1.00000 25

```
THIS PROGRAM PERFORMS THE KOLMOGOROV-SMIRNOV GOODNESS OF FIT TEST FOR UNIFORM AND NORMAL DISTRIBUTIONS

INPUT NO.OF OBSERVERS
  ?  15
INPUT OBSERVED VALUES
  ?  .7,0.0,1.0,.5,.55,.5,1.0,.5,.1,.5,.8,.5,.5,.1,0.0

OBSVRS/OBSERVED/CUM.OBSERVED/NORMALIZED CUM. / CUM.EXP.VAL.  DIFFCE / CUM.EXP.VAL.  DIFFCE.
        VALUE      VALUE      OBSERVED VAL.   UNIFORM DIST          NORMAL DIST.

   1    0.000      7.250        1.000         1.000    0.000        1.000    0.000
   2    0.100      7.250        1.000         0.933    0.067        0.999    0.001
   3    0.500      7.150        0.986         0.867    0.120        0.976    0.010
   4    0.500      6.650        0.917         0.800    0.117        0.858    0.060
   5    0.500      6.150        0.848         0.733    0.115        0.845    0.007
   6    0.700      5.650        0.779         0.667    0.113        0.857    0.077
   7    1.000      4.950        0.683         0.600    0.083        0.703    0.021
   8    1.000      3.950        0.545         0.533    0.011        0.500    0.045
   9    0.800      2.950        0.407         0.467    0.060        0.297    0.110
  10    0.550      2.150        0.297         0.400    0.103        0.143    0.153
  11    0.500      1.600        0.221         0.333    0.113        0.055    0.166
  12    0.500      1.100        0.152         0.267    0.115        0.016    0.135
  13    0.500      0.600        0.083         0.200    0.117        0.004    0.079
  14    0.100      0.100        0.014         0.133    0.120        0.001    0.013
  15    0.000      0.000        0.000         0.067    0.067        0.000    0.000

THIS PROGRAM PERFORMS THE KOLMOGOROV-SMIRNOV GOODNESS OF FIT TEST FOR UNIFORM AND NORMAL DISTRIBUTIONS

INPUT NO.OF OBSERVERS
  ?  15
INPUT OBSERVED VALUES
  ?  .5,.3,1.0,.6,.6,.3,.5,.6,.3,.6,.5,.5,.7,.5,.5

OBSVRS/OBSERVED/CUM.OBSERVED/NORMALIZED CUM. / CUM.EXP.VAL.  DIFFCE / CUM.EXP.VAL.  DIFFCE.
        VALUE      VALUE      OBSERVED VAL.   UNIFORM DIST          NORMAL DIST.

   1    0.300      8.000        1.000         1.000    0.000        1.000    0.000
   2    0.500      7.700        0.963         0.933    0.029        0.999    0.037
   3    0.500      7.200        0.900         0.867    0.033        0.996    0.096
   4    0.500      6.700        0.837         0.800    0.038        0.984    0.146
   5    0.600      6.200        0.775         0.733    0.042        0.945    0.170
   6    0.600      5.600        0.700         0.667    0.033        0.857    0.157
   7    0.700      5.000        0.625         0.600    0.025        0.703    0.078
   8    1.000      4.300        0.538         0.533    0.004        0.500    0.033
   9    0.800      3.300        0.412         0.467    0.054        0.297    0.116
  10    0.600      2.700        0.337         0.400    0.063        0.143    0.194
  11    0.500      2.100        0.263         0.333    0.071        0.055    0.208
  12    0.500      1.600        0.200         0.267    0.067        0.016    0.184
  13    0.500      1.100        0.137         0.200    0.063        0.004    0.133
  14    0.300      0.600        0.075         0.133    0.059        0.001    0.074
  15    0.300      0.300        0.038         0.067    0.029        0.000    0.037
```

Maximum Differences

Alternatives Grouped and Individual ("Yes" values)

Alternative Groups	Uniform Distribution	Normal Distribution
PHASE I		
Group A	.106	.214
Group B	.119	.189
Group C	.083	.217
Group D	.125	.173
PHASE II		
Group A	.106	.192
Group B	.061	.207
Group C	.163	.125
PHASE III		
Group A	.166	.159
Group B	.080	.206
Group C	.208	.127
Individual Alternatives		
PHASE I		
Collection and Services		
A-1	.086	.201
2	.200	.146
3	.165	.161
4	.281	.086
5	.238	.085
6	.243	.043
7	.222	.126
8	.236	.099
9	.127	.155
Staff		
B-1	.137	.168
2	.120	.166

Alternative Groups	Uniform Distribution	Normal Distribution
PHASE II		
Collection and Services		
A-1	.076	.217
2	.181	.126
3	.169	.124
4	.253	.137
5	.215	.113
6	.232	.070
7	.215	.113
8	.234	.090
9	.096	.183
Individual Alternatives		
PHASE II (continued)		
Staff		
B-1	.071	.208
2	.072	.206
PHASE III		
Collection and Services		
A-2	.204	.109
3	.189	.129
4	.258	.057
5	.237	.092
6	.260	.061
7	.198	.100
8	.175	.141
9	.120	.165
Staff		
B-1	.074	.208
2	.090	.192

Note: Tests reported are only for those groups and individual alternatives which were used as inputs for the GERT networks designated GEN1, RHO2, and C&S.

Appendix III, 4: GERT Network Inputs and Outputs

a. Grouped Alternatives (GEN1)

GERT PROBLEM NO. GEN1 BY MILLER E P DATE 3/ 18/ 1972

INPUT NETWORK

1	2	U	0.420	0.356	0.0	0.0	0.0	0.0	0.0	0.0	0.0	0.0
1	4	U	0.075	0.452	0.0	0.0	0.0	0.0	0.0	0.0	0.0	0.0
1	6	U	0.039	0.381	0.0	0.0	0.0	0.0	0.0	0.0	0.0	0.0
1	8	U	0.266	0.309	0.0	0.0	0.0	0.0	0.0	0.0	0.0	0.0
2	9	U	1.000	0.0	0.0	0.0	0.0	0.0	0.0	0.0	0.0	0.0
4	9	U	1.000	0.0	0.0	0.0	0.0	0.0	0.0	0.0	0.0	0.0
6	9	U	1.000	0.0	0.0	0.0	0.0	0.0	0.0	0.0	0.0	0.0
8	9	U	1.000	0.0	0.0	0.0	0.0	0.0	0.0	0.0	0.0	0.0
9	10	U	0.420	0.362	0.0	0.0	0.0	0.0	0.0	0.0	0.0	0.0
9	12	U	0.075	0.567	0.0	0.0	0.0	0.0	0.0	0.0	0.0	0.0
9	14	ND	0.039	0.291	0.181	0.0	0.0	0.0	0.0	0.0	0.0	0.0
10	15	U	1.000	0.0	0.0	0.0	0.0	0.0	0.0	0.0	0.0	0.0
12	15	U	1.000	0.0	0.0	0.0	0.0	0.0	0.0	0.0	0.0	0.0
14	15	U	1.000	0.0	0.0	0.0	0.0	0.0	0.0	0.0	0.0	0.0
15	16	ND	0.420	0.300	0.182	0.0	0.0	0.0	0.0	0.0	0.0	0.0
15	18	U	0.075	0.543	0.0	0.0	0.0	0.0	0.0	0.0	0.0	0.0
15	20	ND	0.039	0.283	0.219	0.0	0.0	0.0	0.0	0.0	0.0	0.0
16	21	U	1.000	0.0	0.0	0.0	0.0	0.0	0.0	0.0	0.0	0.0
18	21	U	1.000	0.0	0.0	0.0	0.0	0.0	0.0	0.0	0.0	0.0
20	21	U	1.000	0.0	0.0	0.0	0.0	0.0	0.0	0.0	0.0	0.0

INPUT NETWORK

NODES AND PROBABILITY OF SELECTION WITH
MEAN AND VARIANCE OF TIME FOR EACH LINK

FROM	TO	PROB	MEAN	VAR
1	2	0.420	0.356	0.0
1	4	0.075	0.452	0.0
1	6	0.039	0.381	0.0
1	8	0.266	0.309	0.0
2	9	1.000	0.0	0.0
4	9	1.000	0.0	0.0
6	9	1.000	0.0	0.0
8	9	1.000	0.0	0.0
9	10	0.420	0.362	0.0
9	12	0.075	0.567	0.000
9	14	0.039	0.291	0.033
10	15	1.000	0.0	0.0
12	15	1.000	0.0	0.0
14	15	1.000	0.0	0.0
15	16	0.420	0.300	0.033
15	18	0.075	0.543	0.000
15	20	0.039	0.283	0.048
16	21	1.000	0.0	0.0
18	21	1.000	0.0	0.0
20	21	1.000	0.0	0.0

NS	NE	PROB	M RHO	V RHO
1	21	0.074088	1.0180	0.0331
1	21	0.013230	1.2610	0.0
1	21	0.006880	1.0010	0.0480
1	21	0.013230	1.2230	0.0331
1	21	0.002362	1.4660	0.0000
1	21	0.001228	1.2060	0.0480
1	21	0.006880	0.9470	0.0659
1	21	0.001228	1.1900	0.0328
1	21	0.000639	0.9300	0.0807
1	21	0.013230	1.1140	0.0331
1	21	0.002362	1.3570	0.0000
1	21	0.001228	1.0970	0.0480
1	21	0.002362	1.3190	0.0331
1	21	0.000422	1.5620	0.0000
1	21	0.000219	1.3020	0.0480
1	21	0.001228	1.0430	0.0659
1	21	0.000219	1.2860	0.0328
1	21	0.000114	1.0260	0.0807
1	21	0.006880	1.0430	0.0331
1	21	0.001228	1.2860	0.0
1	21	0.000639	1.0260	0.0480
1	21	0.001228	1.2480	0.0331
1	21	0.000219	1.4910	0.0000
1	21	0.000114	1.2310	0.0480
1	21	0.000639	0.9720	0.0659
1	21	0.000114	1.2150	0.0328
1	21	0.000059	0.9550	0.0807
1	21	0.046922	0.9710	0.0331
1	21	0.008379	1.2140	0.0000
1	21	0.004357	0.9540	0.0480
1	21	0.008379	1.1760	0.0331
1	21	0.001496	1.4190	0.0000
1	21	0.000778	1.1590	0.0480
1	21	0.004357	0.9000	0.0659
1	21	0.000778	1.1430	0.0328
1	21	0.000405	0.8830	0.0807

1	2	9	10	15	16	21
1	2	9	10	15	18	21
1	2	9	10	15	20	21
1	2	9	12	15	16	21
1	2	9	12	15	18	21
1	2	9	12	15	20	21
1	2	9	14	15	16	21
1	2	9	14	15	18	21
1	2	9	14	15	20	21
1	4	9	10	15	16	21
1	4	9	10	15	18	21
1	4	9	10	15	20	21
1	4	9	12	15	16	21
1	4	9	12	15	18	21
1	4	9	12	15	20	21
1	4	9	14	15	16	21
1	4	9	14	15	18	21
1	4	9	14	15	20	21
1	6	9	10	15	16	21
1	6	9	10	15	18	21
1	6	9	10	15	20	21
1	6	9	12	15	16	21
1	6	9	12	15	18	21
1	6	9	12	15	20	21
1	6	9	14	15	16	21
1	6	9	14	15	18	21
1	6	9	14	15	20	21
1	8	9	10	15	16	21
1	8	9	10	15	18	21
1	8	9	10	15	20	21
1	8	9	12	15	16	21
1	8	9	12	15	18	21
1	8	9	12	15	20	21
1	8	9	14	15	16	21
1	8	9	14	15	18	21
1	8	9	14	15	20	21

GERT PROBLEM NO. GEN1 BY MILLER E P DATE 3/ 18/ 1972

LOOP DELETION VALUE, DEL # 0.0

EQUIVALENT BRANCHES OF THE NETWORK

ENTRY	EXIT	PROB	MEAN RHO	VAR RHO
1	21	0.228123	1.0691	0.0465

Appendix III, 4: GERT Networks Inputs and Outputs
b. Alternatives for Rho_{max} from GEN1 (RHO2)

```
GERT PROBLEM NO. RHO2  BY  E P MILLER    DATE  2/ 14/ 1972

                                INPUT NETWORK
                                  0.0          0.0          0.0          0.0
                                  0.0          0.0          0.0          0.0
                                  0.0          0.0          0.0          0.0
                                  0.0          0.0          0.0          0.0
                                  0.0          0.0          0.0          0.0
                                  0.0          0.0          0.0          0.0
                                  0.0          0.0          0.0          0.0
                                  0.0          0.0          0.0          0.0
                                  0.0          0.0          0.0          0.0
                                  0.0          0.0          0.0          0.0

 1    2 U    1.000     0.0          0.0          0.0          0.0          0.0
 1    3 U    0.100     0.483        0.0          0.0          0.0          0.0
 2    8 U    0.510     0.420        0.0          0.0          0.0          0.0
 2    3 U    0.050     0.420        0.0          0.0          0.0          0.0
 3    4 U    1.000     0.0          0.0          0.0          0.0          0.0
 3    5 U    0.100     0.600        0.0          0.0          0.0          0.0
 4    9 U    0.510     0.530        0.0          0.0          0.0          0.0
 4    5 U    0.050     0.530        0.0          0.0          0.0          0.0
 5    7 U    1.000     0.0          0.0          0.0          0.0          0.0
 5    6 U    0.100     0.567        0.0          0.0          0.0          0.0
 6   10 U    0.510     0.520        0.0          0.0          0.0          0.0
 6    7 U    0.050     0.520        0.0          0.0          0.0          0.0
10    7 U    1.000     0.0          0.0          0.0          0.0          0.0


                          INPUT NETWORK
NODES AND PROBABILITY OF SELECTION WITH
MEAN AND VARIANCE OF TIME FOR EACH LINK

 FROM   TO    PROB        MEAN        VAR
    1    2   1.000       0.0         0.0
    1    3   0.100       0.483       0.0
    2    8   0.510       0.420       0.0
    2    3   0.050       0.420       0.0
    8    3   1.000       0.0         0.0
    3    4   1.000       0.0         0.0
    3    5   0.100       0.600      -0.000
    4    9   0.510       0.530       0.000
    4    5   0.050       0.530       0.000
    9    5   1.000       0.0         0.0
    5    6   1.000       0.0         0.0
    5    7   0.100       0.567       0.000
    6   10   0.510       0.520       0.0
    6    7   0.050       0.520       0.0
   10    7   1.000       0.0         0.0
```

NS	NE	PROB	M RHO	V RHO
1	7	0.132651	1.4700	0.0000
1	7	0.013005	1.4700	0.0000
1	7	0.026010	1.5170	0.0000
1	7	0.013005	1.4700	0.0000
1	7	0.001275	1.4700	0.0000
1	7	0.002550	1.5170	0.0000
1	7	0.026010	1.5400	0.0000
1	7	0.002550	1.5400	0.0000
1	7	0.005100	1.5870	0.0000
1	7	0.013005	1.4700	0.0000
1	7	0.001275	1.4700	0.0000
1	7	0.002550	1.5170	0.0000
1	7	0.001275	1.4700	0.0000
1	7	0.000125	1.4700	0.0000
1	7	0.000250	1.5170	0.0000
1	7	0.002550	1.5400	0.0000
1	7	0.000250	1.5400	0.0000
1	7	0.000500	1.5870	0.0000
1	7	0.026010	1.5330	0.0000
1	7	0.002550	1.5330	0.0000
1	7	0.005100	1.5800	0.0000
1	7	0.002550	1.5330	0.0000
1	7	0.000250	1.5330	0.0000
1	7	0.000500	1.5800	0.0000
1	7	0.005100	1.6030	0.0000
1	7	0.000500	1.6030	0.0000
1	7	0.001000	1.6500	0.0000

1	2	8	3	4	9	5	6	10	7
1	2	8	3	4	9	5	6	7	
1	2	8	3	4	9	5	7		
1	2	8	3	4	5	6	10	7	
1	2	8	3	4	5	6	7		
1	2	8	3	4	5	7			
1	2	8	3	5	6	10	7		
1	2	8	3	5	6	7			
1	2	8	3	5	7				
1	2	3	4	9	5	6	10	7	
1	2	3	4	9	5	6	7		
1	2	3	4	9	5	7			
1	2	3	4	5	6	10	7		
1	2	3	4	5	6	7			
1	2	3	4	5	7				
1	2	3	5	6	10	7			
1	2	3	5	6	7				
1	2	3	5	7					
1	3	4	9	5	6	10	7		
1	3	4	9	5	6	7			
1	3	4	9	5	7				
1	3	4	5	6	10	7			
1	3	4	5	6	7				
1	3	4	5	7					
1	3	5	6	10	7				
1	3	5	6	7					
1	3	5	7						

Appendix III, 4: GERT Networks Inputs and Outputs
c. Alternatives for P_{max} from GEN1 (G&S)

GERT PROBLEM NO. CGS BY E P MILLER DATE 2/ 2/ 1972

INPUT NETWORK

| | | |

INPUT NETWORK

NODES AND PROBABILITY OF SELECTION WITH
MEAN AND VARIANCE OF TIME FOR EACH LINK

FROM	TO	PROB	MEAN	VAR
1	2	0.800	0.627	-0.000
1	3	0.200	0.300	0.063
1	4	0.250	0.383	0.062
1	5	0.100	0.127	0.025
1	6	0.050	0.233	0.054
1	7	0.900	0.297	0.074
1	8	0.600	0.297	0.059
1	9	0.750	0.220	0.043
1	10	0.100	0.477	0.0
2	10	1.000	0.0	0.0
3	10	1.000	0.0	0.0
4	10	1.000	0.0	0.0
5	10	1.000	0.0	0.0
6	10	1.000	0.0	0.0
7	10	1.000	0.0	0.0
8	10	1.000	0.0	0.0
9	10	1.000	0.0	0.0
10	11	0.800	0.590	0.000
10	12	0.200	0.280	0.055
10	13	0.250	0.410	0.090
10	14	0.100	0.170	0.052
10	15	0.050	0.260	0.056
10	16	0.900	0.290	0.097
10	17	0.600	0.260	0.046
10	18	0.750	0.207	0.043
10	19	0.100	0.530	0.000
11	19	1.000	0.0	0.0
12	19	1.000	0.0	0.0
13	19	1.000	0.0	0.0
14	19	1.000	0.0	0.0
15	19	1.000	0.0	0.0
16	19	1.000	0.0	0.0
17	19	1.000	0.0	0.0
18	19	1.000	0.0	0.0
19	20	0.200	0.317	0.072
19	21	0.250	0.343	0.078
19	22	0.100	0.267	0.077
19	23	0.050	0.227	0.051
19	24	0.900	0.273	0.097
19	25	0.600	0.247	0.047
19	26	0.750	0.230	0.040
19	27	0.100	0.947	0.000
20	27	1.000	0.0	0.0
21	27	1.000	0.0	0.0
22	27	1.000	0.0	0.0
23	27	1.000	0.0	0.0
24	27	1.000	0.0	0.0
25	27	1.000	0.0	0.0
26	27	1.000	0.0	0.0

NS	NE	PROB	M RHO	V RHO
1	27	0.120000	1.5340	0.0724
1	27	0.160000	1.5600	0.0784
1	27	0.064000	1.4840	0.0757
1	27	0.032000	1.4440	0.0511
1	27	0.576000	1.4900	0.0967
1	27	0.384000	1.4640	0.0467
1	27	0.480000	1.4470	0.0404
1	27	0.064000	1.7640	0.0000
1	27	0.032000	1.2240	0.1271
1	27	0.040000	1.2500	0.1332
1	27	0.016000	1.1740	0.1315
1	27	0.008000	1.1340	0.1058
1	27	0.144000	1.1830	0.1515
1	27	0.096000	1.1540	0.1014
1	27	0.120000	1.1370	0.0952
1	27	0.016000	1.4540	0.0548
1	27	0.040000	1.3540	0.1624
1	27	0.050000	1.3800	0.1584
1	27	0.020000	1.3040	0.1667
1	27	0.010000	1.2640	0.1411
1	27	0.180000	1.3100	0.1867
1	27	0.120000	1.2840	0.1367
1	27	0.150000	1.2670	0.1304
1	27	0.020000	1.5840	0.0900
1	27	0.016000	1.1140	0.1239
1	27	0.020000	1.1400	0.1299
1	27	0.008000	1.0940	0.1293
1	27	0.036000	1.0240	0.1026
1	27	0.072000	1.0700	0.1483

1	2	10	11	19	20	27
1	2	10	11	19	21	27
1	2	10	11	19	22	27
1	2	10	11	19	23	27
1	2	10	11	19	24	27
1	2	10	11	19	25	27
1	2	10	11	19	26	27
1	2	10	11	19	27	
1	2	10	12	19	20	27
1	2	10	12	19	21	27
1	2	10	12	19	22	27
1	2	10	12	19	23	27
1	2	10	12	19	24	27
1	2	10	12	19	25	27
1	2	10	12	19	26	27
1	2	10	12	19	27	
1	2	10	13	19	20	27
1	2	10	13	19	21	27
1	2	10	13	19	22	27
1	2	10	13	19	23	27
1	2	10	13	19	24	27
1	2	10	13	19	25	27
1	2	10	13	19	26	27
1	2	10	13	19	27	
1	2	10	14	19	20	27
1	2	10	14	19	21	27
1	2	10	14	19	22	27
1	2	10	14	19	23	27
1	2	10	14	19	24	27

1	27	0.060000	1.0270	0.0919
1	27	0.008000	1.3440	0.0515
1	27	0.008000	1.2040	0.1281
1	27	0.010000	1.2300	0.1341
1	27	0.004000	1.1540	0.1324
1	27	0.002000	1.1140	0.1068
1	27	0.036000	1.1600	0.1524
1	27	0.024000	1.1340	0.1024
1	27	0.030000	1.1170	0.0961
1	27	0.004000	1.4340	0.0557
1	27	0.144000	1.2340	0.1691
1	27	0.180000	1.2600	0.1751
1	27	0.072000	1.1840	0.1735
1	27	0.036000	1.1440	0.1478
1	27	0.648000	1.1900	0.1934
1	27	0.432000	1.1640	0.1434
1	27	0.540000	1.1470	0.1371
1	27	0.072000	1.4640	0.0967
1	27	0.096000	1.2040	0.1186
1	27	0.120000	1.2300	0.1246
1	27	0.048000	1.1540	0.1230
1	27	0.024000	1.1140	0.0973
1	27	0.432000	1.1600	0.1429
1	27	0.288000	1.1340	0.0929
1	27	0.360000	1.1170	0.0866
1	27	0.048000	1.4340	0.0462
1	27	0.120000	1.1510	0.1156
1	27	0.150000	1.1770	0.1217
1	27	0.060000	1.1010	0.1200

1	2	10	14	19	25	27
1	2	10	14	19	26	27
1	2	10	14	19	27	
1	2	10	15	19	20	27
1	2	10	15	19	21	27
1	2	10	15	19	22	27
1	2	10	15	19	23	27
1	2	10	15	19	24	27
1	2	10	15	19	25	27
1	2	10	15	19	26	27
1	2	10	15	19	27	
1	2	10	16	19	20	27
1	2	10	16	19	21	27
1	2	10	16	19	22	27
1	2	10	16	19	23	27
1	2	10	16	19	24	27
1	2	10	16	19	25	27
1	2	10	16	19	26	27
1	2	10	16	19	27	
1	2	10	17	19	20	27
1	2	10	17	19	21	27
1	2	10	17	19	22	27
1	2	10	17	19	23	27
1	2	10	17	19	24	27
1	2	10	17	19	25	27
1	2	10	17	19	26	27
1	2	10	17	19	27	
1	2	10	18	19	20	27
1	2	10	18	19	21	27
1	2	10	18	19	22	27

1	27	0.540000	1.1070	0.1400
1	27	0.360000	1.0810	0.0899
1	27	0.450000	1.0640	0.0837
1	27	0.060000	1.3810	0.0433
1	27	0.016000	1.4740	0.0724
1	27	0.020000	1.5000	0.0784
1	27	0.008000	1.4240	0.0767
1	27	0.004000	1.3840	0.0511
1	27	0.072000	1.4300	0.0967
1	27	0.048000	1.4040	0.0467
1	27	0.060000	1.3870	0.0404
1	27	0.008000	1.7040	0.0000
1	27	0.032000	1.2070	0.1349
1	27	0.040000	1.2330	0.1409
1	27	0.016000	1.1570	0.1392
1	27	0.008000	1.1170	0.1136
1	27	0.144000	1.1630	0.1592
1	27	0.096000	1.1370	0.1092
1	27	0.120000	1.1200	0.1029
1	27	0.016000	1.4370	0.0525
1	27	0.008000	0.8370	0.1896
1	27	0.010000	0.9230	0.1957
1	27	0.006000	0.8470	0.1940
1	27	0.002000	0.8070	0.1683
1	27	0.036000	0.8530	0.2140
1	27	0.024000	0.8270	0.1639
1	27	0.030000	0.8100	0.1577
1	27	0.004000	1.1270	0.1173
1	27	0.010000	1.0270	0.2249
1	27	0.012500	1.0530	0.2309

1	2	10	18	19	24	27
1	2	10	18	19	25	27
1	2	10	18	19	26	27
1	2	10	18	19	27	
1	2	10	19	20	27	
1	2	10	19	21	27	
1	2	10	19	22	27	
1	2	10	19	23	27	
1	2	10	19	24	27	
1	2	10	19	25	27	
1	2	10	19	26	27	
1	2	10	19	27		
1	3	10	11	19	20	27
1	3	10	11	19	21	27
1	3	10	11	19	22	27
1	3	10	11	19	23	27
1	3	10	11	19	24	27
1	3	10	11	19	25	27
1	3	10	11	19	26	27
1	3	10	11	19	27	
1	3	10	12	19	20	27
1	3	10	12	19	21	27
1	3	10	12	19	22	27
1	3	10	12	19	23	27
1	3	10	12	19	24	27
1	3	10	12	19	25	27
1	3	10	12	19	26	27
1	3	10	12	19	27	
1	3	10	13	19	20	27

1	27	0.002500	0.9370	0.2036
1	27	0.045000	0.9030	0.2492
1	27	0.030000	0.9570	0.1992
1	27	0.037500	0.7400	0.1929
1	27	0.005000	1.2570	0.1525
1	27	0.004000	0.7870	0.1854
1	27	0.005000	0.8130	0.1924
1	27	0.002000	0.7370	0.1908
1	27	0.001000	0.6970	0.1651
1	27	0.018000	0.7410	0.2108
1	27	0.012000	0.7170	0.1607
1	27	0.015000	0.7000	0.1544
1	27	0.002000	1.0170	0.1140
1	27	0.002000	0.8770	0.1906
1	27	0.002500	0.9030	0.1966
1	27	0.001000	0.8270	0.1949
1	27	0.000500	0.7870	0.1693
1	27	0.009000	0.9330	0.2149
1	27	0.006000	0.8070	0.1649
1	27	0.007500	0.7900	0.1586
1	27	0.001000	1.1070	0.1192
1	27	0.036000	0.9070	0.2316
1	27	0.045000	0.9330	0.2375
1	27	0.018000	0.8570	0.2359
1	27	0.009000	0.8170	0.2103
1	27	0.162000	0.8630	0.2557
1	27	0.108000	0.8370	0.2059
1	27	0.135000	0.8230	0.1996
1	27	0.018000	1.1470	0.1592

1	3	10	13	19	22	27
1	3	10	13	19	23	27
1	3	10	13	19	24	27
1	3	10	13	19	25	27
1	3	10	13	19	26	27
1	3	10	13	19	27	
1	3	10	14	19	20	27
1	3	10	14	19	21	27
1	3	10	14	19	22	27
1	3	10	14	19	23	27
1	3	10	14	19	24	27
1	3	10	14	19	25	27
1	3	10	14	19	26	27
1	3	10	14	19	27	
1	3	10	15	19	20	27
1	3	10	15	19	21	27
1	3	10	15	19	22	27
1	3	10	15	19	23	27
1	3	10	15	19	24	27
1	3	10	15	19	25	27
1	3	10	15	19	26	27
1	3	10	15	19	27	
1	3	10	16	19	20	27
1	3	10	16	19	21	27
1	3	10	16	19	22	27
1	3	10	16	19	23	27
1	3	10	16	19	24	27
1	3	10	16	19	25	27
1	3	10	15	19	26	27
1	3	10	16	19	27	

1	27	0.030000	0.9030	0.1871
1	27	0.012000	0.8270	0.1855
1	27	0.006000	0.7870	0.1598
1	27	0.108000	0.8330	0.2054
1	27	0.072000	0.8070	0.1554
1	27	0.090000	0.7900	0.1491
1	27	0.012000	1.1070	0.1097
1	27	0.030000	0.8240	0.1781
1	27	0.037500	0.8500	0.1842
1	27	0.015000	0.7740	0.1825
1	27	0.007500	0.7340	0.1568
1	27	0.135000	0.7800	0.2025
1	27	0.090000	0.7540	0.1524
1	27	0.112500	0.7370	0.1462
1	27	0.015000	1.0540	0.1358
1	27	0.004000	1.1470	0.1349
1	27	0.005000	1.1730	0.1409
1	27	0.002000	1.0970	0.1392
1	27	0.001000	1.0570	0.1135
1	27	0.018000	1.1030	0.1592
1	27	0.012000	1.0770	0.1092
1	27	0.015000	1.0600	0.1029
1	27	0.002000	1.3770	0.0625
1	27	0.040000	1.2900	0.1405
1	27	0.050000	1.3160	0.1465
1	27	0.020000	1.2400	0.1449
1	27	0.010000	1.2000	0.1192
1	27	0.180000	1.2460	0.1648
1	27	0.120000	1.2200	0.1148
1	27	0.150000	1.2030	0.1085

1 3 10 17 19 21 27
1 3 10 17 19 22 27
1 3 10 17 19 23 27
1 3 10 17 19 24 27
1 3 10 17 19 25 27
1 3 10 17 19 26 27
1 3 10 17 19 27
1 3 10 18 19 20 27
1 3 10 18 19 21 27
1 3 10 18 19 22 27
1 3 10 18 19 23 27
1 3 10 18 19 24 27
1 3 10 18 19 25 27
1 3 10 18 19 26 27
1 3 10 18 19 27
1 3 10 19 20 27
1 3 10 19 21 27
1 3 10 19 22 27
1 3 10 19 23 27
1 3 10 19 24 27
1 3 10 19 25 27
1 3 10 19 26 27
1 3 10 19 27
1 4 10 11 19 20 27
1 4 10 11 19 21 27
1 4 10 11 19 22 27
1 4 10 11 19 23 27
1 4 10 11 19 24 27
1 4 10 11 19 25 27

1	27	0.010000	0.9800	0.1952
1	27	0.012500	1.0060	0.2013
1	27	0.005000	0.9300	0.1996
1	27	0.002500	0.8900	0.1740
1	27	0.045000	0.9360	0.2195
1	27	0.030000	0.9100	0.1695
1	27	0.037500	0.8930	0.1633
1	27	0.035000	1.2100	0.1229
1	27	0.017500	1.1100	0.2305
1	27	0.015625	1.1360	0.2365
1	27	0.006250	1.0600	0.2348
1	27	0.003125	1.0200	0.2092
1	27	0.056250	1.0660	0.2548
1	27	0.037500	1.0400	0.2048
1	27	0.046875	1.0240	0.1985
1	27	0.006250	1.3400	0.1581
1	27	0.005000	0.9700	0.1920
1	27	0.006250	0.8960	0.1980
1	27	0.002500	0.8200	0.1964
1	27	0.001250	0.7800	0.1707
1	27	0.022500	0.8260	0.2164
1	27	0.015000	0.8000	0.1553
1	27	0.013750	0.7830	0.1601
1	27	0.002500	1.1000	0.1197
1	27	0.002500	0.9600	0.1962
1	27	0.003125	0.9860	0.2022
1	27	0.001250	0.9100	0.2005
1	27	0.000625	0.8700	0.1749
1	27	0.011250	0.9160	0.2205
1	27	0.002500	0.8900	0.1705

1	4	10	11	19	27	
1	4	10	12	19	20	27
1	4	10	12	19	21	27
1	4	10	12	19	22	27
1	4	10	12	19	23	27
1	4	10	12	19	24	27
1	4	10	12	19	25	27
1	4	10	12	19	26	27
1	4	10	12	19	27	
1	4	10	13	19	20	27
1	4	10	13	19	21	27
1	4	10	13	19	22	27
1	4	10	13	19	23	27
1	4	10	13	19	24	27
1	4	10	13	19	25	27
1	4	10	13	19	26	27
1	4	10	13	19	27	
1	4	10	14	19	20	27
1	4	10	14	19	21	27
1	4	10	14	19	22	27
1	4	10	14	19	23	27
1	4	10	14	19	24	27
1	4	10	14	19	25	27
1	4	10	14	19	26	27
1	4	10	14	19	27	
1	4	10	15	19	20	27
1	4	10	15	19	21	27
1	4	10	15	19	22	27
1	4	10	15	19	23	27
1	4	10	15	19	24	27

1	27	0.009375	0.8730	0.1642
1	27	0.001250	1.1900	0.1238
1	27	0.045000	0.9900	0.2372
1	27	0.056250	1.0160	0.2432
1	27	0.022500	0.9400	0.2416
1	27	0.011250	0.9000	0.2159
1	27	0.202500	0.9460	0.2616
1	27	0.135000	0.9200	0.2115
1	27	0.150750	0.9030	0.2052
1	27	0.022500	1.2200	0.1648
1	27	0.030000	0.9600	0.1857
1	27	0.037500	0.9980	0.1927
1	27	0.015000	0.9100	0.1911
1	27	0.007500	0.8700	0.1654
1	27	0.135000	0.9160	0.2111
1	27	0.090000	0.8900	0.1810
1	27	0.112500	0.8730	0.1547
1	27	0.015000	1.1900	0.1143
1	27	0.037500	0.9070	0.1837
1	27	0.046875	0.9330	0.1898
1	27	0.018750	0.8570	0.1881
1	27	0.009375	0.8170	0.1625
1	27	0.168750	0.8630	0.2091
1	27	0.112500	0.8370	0.1580
1	27	0.140625	0.8200	0.1518
1	27	0.018750	1.1370	0.1114
1	27	0.005000	1.2300	0.1405
1	27	0.006250	1.2560	0.1465
1	27	0.002500	1.1800	0.1449
1	27	0.001250	1.1400	0.1192

1	4	10	15	19	26	27
1	4	10	15	19	27	
1	4	10	16	19	20	27
1	4	10	15	19	21	27
1	4	10	16	19	22	27
1	4	10	15	19	23	27
1	4	10	16	19	24	27
1	4	10	16	19	25	27
1	4	10	15	19	26	27
1	4	10	16	19	27	
1	4	10	17	19	20	27
1	4	10	17	19	21	27
1	4	10	17	19	22	27
1	4	10	17	19	23	27
1	4	10	17	19	24	27
1	4	10	17	19	25	27
1	4	10	17	19	26	27
1	4	10	17	19	27	
1	4	10	18	19	20	27
1	4	10	18	19	21	27
1	4	10	18	19	22	27
1	4	10	18	19	23	27
1	4	10	18	19	24	27
1	4	10	18	19	25	27
1	4	10	18	19	26	27
1	4	10	18	19	27	
1	4	10	19	20	27	
1	4	10	19	21	27	
1	4	10	19	22	27	
1	4	10	19	23	27	

1	27	0.015000	1.1600	0.1148
1	27	0.018750	1.1430	0.1085
1	27	0.002500	1.4600	0.0681
1	27	0.016000	1.0340	0.0970
1	27	0.020000	1.0600	0.1030
1	27	0.008000	0.9840	0.1014
1	27	0.004000	0.7440	0.0757
1	27	0.072000	0.9700	0.1214
1	27	0.048000	0.9640	0.0713
1	27	0.060000	0.9470	0.0651
1	27	0.008000	1.2640	0.0246
1	27	0.004000	0.7240	0.1518
1	27	0.005000	0.7500	0.1578
1	27	0.002000	0.6740	0.1561
1	27	0.001000	0.6340	0.1305
1	27	0.018000	0.6800	0.1751
1	27	0.012000	0.6540	0.1251
1	27	0.015000	0.6370	0.1198
1	27	0.002000	0.9540	0.0734
1	27	0.005000	0.8540	0.1870
1	27	0.006250	0.8800	0.1930
1	27	0.002500	0.8040	0.1914
1	27	0.001250	0.7640	0.1657
1	27	0.022500	0.9100	0.2114
1	27	0.015000	0.7840	0.1613
1	27	0.018750	0.7670	0.1550
1	27	0.002500	1.0840	0.1146
1	27	0.002000	0.6140	0.1485
1	27	0.002500	0.6430	0.1546

1	4	10	19	24	27	
1	4	10	19	25	27	
1	4	10	19	26	27	
1	4	10	19	27		
1	5	10	11	19	20	27
1	5	10	11	19	21	27
1	5	10	11	19	22	27
1	5	10	11	19	23	27
1	5	10	11	19	24	27
1	5	10	11	19	25	27
1	5	10	11	19	26	27
1	5	10	11	19	27	
1	5	10	12	19	20	27
1	5	10	12	19	21	27
1	5	10	12	19	22	27
1	5	10	12	19	23	27
1	5	10	12	19	24	27
1	5	10	12	19	25	27
1	5	10	12	19	26	27
1	5	10	12	19	27	
1	5	10	13	19	20	27
1	5	10	13	19	21	27
1	5	10	13	19	22	27
1	5	10	13	19	23	27
1	5	10	13	19	24	27
1	5	10	13	19	25	27
1	5	10	13	19	26	27
1	5	10	13	19	27	
1	5	10	14	19	20	27
1	5	10	14	19	21	27

1	27	0.000500	0.5740	0.1273
1	27	0.007000	0.5700	0.1729
1	27	0.005000	0.5440	0.1228
1	27	0.007500	0.5270	0.1166
1	27	0.001000	0.8440	0.0762
1	27	0.001000	0.7040	0.1527
1	27	0.001250	0.7300	0.1587
1	27	0.000500	0.6540	0.1571
1	27	0.000250	0.6140	0.1314
1	27	0.004500	0.6600	0.1771
1	27	0.003000	0.6340	0.1270
1	27	0.003750	0.6170	0.1207
1	27	0.000500	0.9340	0.0803
1	27	0.018000	0.7340	0.1937
1	27	0.022500	0.7600	0.1998
1	27	0.009000	0.6840	0.1981
1	27	0.004500	0.6440	0.1724
1	27	0.081000	0.6900	0.2181
1	27	0.054000	0.6640	0.1680
1	27	0.057500	0.6470	0.1618
1	27	0.009000	0.9640	0.1214
1	27	0.012000	0.7040	0.1432
1	27	0.015000	0.7300	0.1473
1	27	0.003000	0.6540	0.1476
1	27	0.003000	0.6140	0.1219
1	27	0.054000	0.6600	0.1676
1	27	0.036000	0.6340	0.1175
1	27	0.045000	0.6170	0.1113
1	27	0.005000	0.9340	0.0709
1	27	0.015000	0.6510	0.1403

1	5	10	14	19	23	27
1	5	10	14	19	24	27
1	5	10	14	19	25	27
1	5	10	14	19	26	27
1	5	10	14	19	27	
1	5	10	15	19	20	27
1	5	10	15	19	21	27
1	5	10	15	19	22	27
1	5	10	15	19	23	27
1	5	10	15	19	24	27
1	5	10	15	19	25	27
1	5	10	15	19	26	27
1	5	10	15	19	27	
1	5	10	16	19	20	27
1	5	10	16	19	21	27
1	5	10	16	19	22	27
1	5	10	16	19	23	27
1	5	10	16	19	24	27
1	5	10	16	19	25	27
1	5	10	16	19	26	27
1	5	10	16	19	27	
1	5	10	17	19	20	27
1	5	10	17	19	21	27
1	5	10	17	19	22	27
1	5	10	17	19	23	27
1	5	10	17	19	24	27
1	5	10	17	19	25	27
1	5	10	17	19	26	27
1	5	10	17	19	27	

1	27	0.007500	0.6010	0.1446
1	27	0.003750	0.5610	0.1190
1	27	0.007500	0.6070	0.1546
1	27	0.005000	0.5810	0.1145
1	27	0.006250	0.5640	0.1083
1	27	0.007500	0.9810	0.0579
1	27	0.002000	0.9740	0.0070
1	27	0.002500	1.0000	0.1030
1	27	0.001000	0.9240	0.1014
1	27	0.000500	0.9840	0.0757
1	27	0.009000	0.9300	0.1214
1	27	0.006000	0.9040	0.0713
1	27	0.007500	0.9870	0.0551
1	27	0.001000	1.2040	0.0247
1	27	0.008000	1.1400	0.1267
1	27	0.010000	1.1660	0.1327
1	27	0.004000	1.0900	0.1310
1	27	0.002000	1.0500	0.1054
1	27	0.036000	1.0760	0.1510
1	27	0.024000	1.0700	0.1009
1	27	0.030000	1.0530	0.0947
1	27	0.004000	1.3700	0.0543
1	27	0.002000	0.8300	0.1814
1	27	0.002500	0.8560	0.1874
1	27	0.001000	0.7800	0.1958
1	27	0.000500	0.7400	0.1531
1	27	0.009000	0.7860	0.2058
1	27	0.005000	0.7600	0.1557
1	27	0.007500	0.7430	0.1494

1	5	10	18	19	21	27
1	5	10	18	19	22	27
1	5	10	18	19	23	27
1	5	10	18	19	24	27
1	5	10	18	19	25	27
1	5	10	18	19	26	27
1	5	10	18	19	27	
1	5	10	19	20	27	
1	5	10	19	21	27	
1	5	10	19	22	27	
1	5	10	19	23	27	
1	5	10	19	24	27	
1	5	10	19	25	27	
1	5	10	19	26	27	
1	5	10	19	27		
1	6	10	11	19	20	27
1	6	10	11	19	21	27
1	6	10	11	19	22	27
1	6	10	11	19	23	27
1	6	10	11	19	24	27
1	6	10	11	19	25	27
1	6	10	11	19	26	27
1	6	10	11	19	27	
1	5	10	12	19	20	27
1	6	10	12	19	21	27
1	6	10	12	19	22	27
1	6	10	12	19	23	27
1	6	10	12	19	24	27
1	6	10	12	19	25	27
1	6	10	12	19	26	27

1	27	0.002500	0.9600	0.2166
1	27	0.003125	0.9860	0.2227
1	27	0.001250	0.9100	0.2210
1	27	0.000625	0.8700	0.1954
1	27	0.011250	0.9160	0.2410
1	27	0.007500	0.8900	0.1909
1	27	0.009375	0.8730	0.1947
1	27	0.001250	1.1900	0.1443
1	27	0.001000	0.7200	0.1782
1	27	0.001250	0.7460	0.1842
1	27	0.000500	0.6700	0.1825
1	27	0.000250	0.6300	0.1569
1	27	0.004500	0.6760	0.2025
1	27	0.003000	0.6500	0.1525
1	27	0.003750	0.6330	0.1462
1	27	0.000500	0.7500	0.1058
1	27	0.000500	0.8100	0.1823
1	27	0.000625	0.8360	0.1984
1	27	0.000250	0.7600	0.1867
1	27	0.000125	0.7200	0.1611
1	27	0.002250	0.7660	0.2067
1	27	0.001500	0.7400	0.1566
1	27	0.001875	0.7230	0.1504
1	27	0.000250	1.0400	0.1100
1	27	0.009000	0.8400	0.2234
1	27	0.011250	0.8660	0.2294
1	27	0.004500	0.7900	0.2277
1	27	0.002250	0.7500	0.2021
1	27	0.040500	0.7960	0.2477
1	27	0.027000	0.7700	0.1977

1	6	10	13	19	20	27
1	6	10	13	19	21	27
1	6	10	13	19	22	27
1	6	10	13	19	23	27
1	6	10	13	19	24	27
1	6	10	13	19	25	27
1	6	10	13	19	26	27
1	6	10	13	19	27	
1	6	10	14	19	20	27
1	6	10	14	19	21	27
1	6	10	14	19	22	27
1	6	10	14	19	23	27
1	6	10	14	19	24	27
1	6	10	14	19	25	27
1	6	10	14	19	26	27
1	6	10	14	19	27	
1	6	10	15	19	20	27
1	6	10	15	19	21	27
1	6	10	15	19	22	27
1	6	10	15	19	23	27
1	6	10	15	19	24	27
1	6	10	15	19	25	27
1	6	10	15	19	26	27
1	6	10	15	19	27	
1	6	10	16	19	20	27
1	6	10	16	19	21	27
1	6	10	16	19	22	27
1	6	10	16	19	23	27
1	6	10	16	19	24	27

1	27	0.004500	1.0700	0.1510
1	27	0.006000	0.9100	0.1729
1	27	0.007500	0.8360	0.1709
1	27	0.003000	0.7600	0.1772
1	27	0.001500	0.7200	0.1516
1	27	0.027000	0.7660	0.1972
1	27	0.018000	0.7400	0.1472
1	27	0.022500	0.7230	0.1409
1	27	0.003000	1.0400	0.1005
1	27	0.007500	0.7570	0.1699
1	27	0.009375	0.7810	0.1760
1	27	0.003750	0.7070	0.1743
1	27	0.001875	0.6670	0.1486
1	27	0.033750	0.7130	0.1943
1	27	0.022500	0.6870	0.1442
1	27	0.028125	0.6700	0.1380
1	27	0.003750	0.9870	0.0976
1	27	0.001000	1.0800	0.1267
1	27	0.001250	1.1060	0.1327
1	27	0.000500	1.0300	0.1310
1	27	0.000250	0.9900	0.1054
1	27	0.004500	1.0360	0.1510
1	27	0.003000	1.0100	0.1009
1	27	0.003750	0.9930	0.0947
1	27	0.000500	1.3100	0.0543
1	27	0.144000	1.1940	0.1656
1	27	0.180000	1.2200	0.1726
1	27	0.072000	1.1440	0.1710
1	27	0.036000	1.1040	0.1453

1	6	10	16	19	26	27
1	6	10	16	19	27	
1	6	10	17	19	20	27
1	6	10	17	19	21	27
1	6	10	17	19	22	27
1	6	10	17	19	23	27
1	6	10	17	19	24	27
1	6	10	17	19	25	27
1	6	10	17	19	26	27
1	6	10	17	19	27	
1	6	10	18	19	20	27
1	6	10	18	19	21	27
1	6	10	18	19	22	27
1	6	10	18	19	23	27
1	6	10	18	19	24	27
1	6	10	18	19	25	27
1	6	10	18	19	26	27
1	6	10	18	19	27	
1	6	10	19	20	27	
1	6	10	19	21	27	
1	6	10	19	22	27	
1	6	10	19	23	27	
1	6	10	19	24	27	
1	6	10	19	25	27	
1	6	10	19	26	27	
1	6	10	19	27		
1	7	10	11	19	20	27
1	7	10	11	19	21	27
1	7	10	11	19	22	27
1	7	10	11	19	23	27

1	27	0.432000	1.1240	0.1409
1	27	0.540000	1.1070	0.1347
1	27	0.072000	1.4240	0.0742
1	27	0.036000	0.8840	0.2214
1	27	0.045000	0.9100	0.2274
1	27	0.018000	0.8340	0.2257
1	27	0.009000	0.7940	0.2001
1	27	0.162000	0.8400	0.2457
1	27	0.108000	0.8140	0.1957
1	27	0.135000	0.7970	0.1894
1	27	0.018000	1.1140	0.1490
1	27	0.045000	1.0140	0.2566
1	27	0.056250	1.0400	0.2626
1	27	0.022500	0.9640	0.2610
1	27	0.011250	0.9240	0.2353
1	27	0.202500	0.9700	0.2810
1	27	0.135000	0.9440	0.2309
1	27	0.168750	0.9270	0.2246
1	27	0.022500	1.2440	0.1842
1	27	0.018000	0.7740	0.2131
1	27	0.022500	0.9000	0.2242
1	27	0.009000	0.7240	0.2225
1	27	0.004500	0.6840	0.1969
1	27	0.081000	0.7300	0.2425
1	27	0.054000	0.7040	0.1724
1	27	0.067500	0.6870	0.1862
1	27	0.009000	1.0040	0.1458
1	27	0.027000	0.8640	0.2223
1	27	0.011250	0.8900	0.2283
1	27	0.004500	0.8140	0.2257

1	7	10	11	19	25	27
1	7	10	11	19	26	27
1	7	10	11	19	27	
1	7	10	12	19	20	27
1	7	10	12	19	21	27
1	7	10	12	19	22	27
1	7	10	12	19	23	27
1	7	10	12	19	24	27
1	7	10	12	19	25	27
1	7	10	12	19	26	27
1	7	10	12	19	27	
1	7	10	13	19	20	27
1	7	10	13	19	21	27
1	7	10	13	19	22	27
1	7	10	13	19	23	27
1	7	10	13	19	24	27
1	7	10	13	19	25	27
1	7	10	13	19	26	27
1	7	10	13	19	27	
1	7	10	14	19	20	27
1	7	10	14	19	21	27
1	7	10	14	19	22	27
1	7	10	14	19	23	27
1	7	10	14	19	24	27
1	7	10	14	19	25	27
1	7	10	14	19	26	27
1	7	10	14	19	27	
1	7	10	15	19	20	27
1	7	10	15	19	21	27
1	7	10	15	19	22	27

1	27	0.040500	0.8200	0.2467
1	27	0.027000	0.7940	0.1966
1	27	0.033750	0.7770	0.1903
1	27	0.054000	1.0940	0.1499
1	27	0.162000	0.8040	0.2633
1	27	0.202500	0.9200	0.2594
1	27	0.081000	0.8440	0.2677
1	27	0.040500	0.8040	0.2420
1	27	0.729000	0.8500	0.2877
1	27	0.486000	0.8240	0.2376
1	27	0.607500	0.8070	0.2314
1	27	0.081000	1.1240	0.1910
1	27	0.108000	0.8640	0.2128
1	27	0.135000	0.8900	0.2199
1	27	0.054000	0.8140	0.2172
1	27	0.027000	0.7740	0.1915
1	27	0.486000	0.8200	0.2372
1	27	0.324000	0.7940	0.1871
1	27	0.405000	0.7770	0.1809
1	27	0.054000	1.0940	0.1405
1	27	0.135000	0.8110	0.2099
1	27	0.168750	0.8370	0.2159
1	27	0.067500	0.7610	0.2142
1	27	0.033750	0.7210	0.1886
1	27	0.607500	0.7670	0.2142
1	27	0.405000	0.7410	0.1942
1	27	0.506250	0.7240	0.1779
1	27	0.067500	1.0410	0.1375
1	27	0.018000	1.1340	0.1666

1	7	10	15	19	23	27
1	7	10	15	19	24	27
1	7	10	15	19	25	27
1	7	10	15	19	26	27
1	7	10	15	19	27	
1	7	10	16	19	20	27
1	7	10	16	19	21	27
1	7	10	16	19	22	27
1	7	10	16	19	23	27
1	7	10	16	19	24	27
1	7	10	16	19	25	27
1	7	10	16	19	26	27
1	7	10	16	19	27	
1	7	10	17	19	20	27
1	7	10	17	19	21	27
1	7	10	17	19	22	27
1	7	10	17	19	23	27
1	7	10	17	19	24	27
1	7	10	17	19	25	27
1	7	10	17	19	26	27
1	7	10	17	19	27	
1	7	10	18	19	20	27
1	7	10	18	19	21	27
1	7	10	18	19	22	27
1	7	10	18	19	23	27
1	7	10	18	19	24	27
1	7	10	18	19	25	27
1	7	10	18	19	26	27
1	7	10	18	19	27	
1	7	10	18	20	27	

1	27	0.040500	0.8200	0.2467
1	27	0.027000	0.7940	0.1966
1	27	0.033750	0.7770	0.1903
1	27	0.054000	1.0940	0.1499
1	27	0.162000	0.8940	0.2633
1	27	0.202500	0.9200	0.2594
1	27	0.081000	0.8440	0.2677
1	27	0.040500	0.8040	0.2420
1	27	0.729000	0.8500	0.2877
1	27	0.486000	0.8240	0.2376
1	27	0.607500	0.8070	0.2314
1	27	0.081000	1.1240	0.1910
1	27	0.108000	0.8640	0.2128
1	27	0.135000	0.8900	0.2199
1	27	0.054000	0.9140	0.2172
1	27	0.027000	0.7740	0.1915
1	27	0.486000	0.8200	0.2372
1	27	0.324000	0.7940	0.1971
1	27	0.405000	0.7770	0.1809
1	27	0.054000	1.0940	0.1405
1	27	0.135000	0.8110	0.2099
1	27	0.168750	0.8370	0.2159
1	27	0.067500	0.7610	0.2142
1	27	0.033750	0.7210	0.1886
1	27	0.607500	0.7670	0.2142
1	27	0.405000	0.7410	0.1942
1	27	0.506250	0.7240	0.1779
1	27	0.067500	1.0410	0.1475
1	27	0.018000	1.1140	0.1666

1	7	10	15	19	23	27
1	7	10	15	19	24	27
1	7	10	15	19	25	27
1	7	10	15	19	26	27
1	7	10	15	19	27	
1	7	10	16	19	20	27
1	7	10	16	19	21	27
1	7	10	16	19	22	27
1	7	10	16	19	23	27
1	7	10	16	19	24	27
1	7	10	16	19	25	27
1	7	10	16	19	26	27
1	7	10	16	19	27	
1	7	10	17	19	20	27
1	7	10	17	19	21	27
1	7	10	17	19	22	27
1	7	10	17	19	23	27
1	7	10	17	19	24	27
1	7	10	17	19	25	27
1	7	10	17	19	26	27
1	7	10	17	19	27	
1	7	10	18	19	20	27
1	7	10	18	19	21	27
1	7	10	18	19	22	27
1	7	10	18	19	23	27
1	7	10	18	19	24	27
1	7	10	18	19	25	27
1	7	10	18	19	26	27
1	7	10	18	19	27	
1	7	10	18	20	27	

1	27	0.009000	1.0840	0.1710
1	27	0.004500	1.0440	0.1453
1	27	0.081000	1.0900	0.1910
1	27	0.054000	1.0640	0.1409
1	27	0.067500	1.0470	0.1347
1	27	0.009000	1.0640	0.0943
1	27	0.096000	1.2040	0.1314
1	27	0.120000	1.2300	0.1375
1	27	0.048000	1.1540	0.1358
1	27	0.024000	1.1140	0.1101
1	27	0.432000	1.1600	0.1558
1	27	0.288000	1.1340	0.1057
1	27	0.360000	1.1170	0.0995
1	27	0.048000	1.4340	0.0591
1	27	0.024000	0.8940	0.1952
1	27	0.030000	0.9200	0.1922
1	27	0.012000	0.8440	0.1905
1	27	0.006000	0.8040	0.1649
1	27	0.108000	0.8500	0.2105
1	27	0.072000	0.8240	0.1605
1	27	0.090000	0.8070	0.1542
1	27	0.012000	1.1240	0.1138
1	27	0.030000	1.0240	0.2214
1	27	0.037500	1.0500	0.2274
1	27	0.015000	0.9740	0.2258
1	27	0.007500	0.9340	0.2001
1	27	0.135000	0.9800	0.2458
1	27	0.090000	0.9540	0.1957
1	27	0.112500	0.9370	0.1894
1	27	0.015000	1.2540	0.1490

1	7	10	19	22	27	
1	7	10	19	23	27	
1	7	10	19	24	27	
1	7	10	19	25	27	
1	7	10	19	26	27	
1	7	10	19	27		
1	8	10	11	19	20	27
1	8	10	11	19	21	27
1	8	10	11	19	22	27
1	8	10	11	19	23	27
1	8	10	11	19	24	27
1	8	10	11	19	25	27
1	8	10	11	19	26	27
1	8	10	11	19	27	
1	8	10	12	19	20	27
1	8	10	12	19	21	27
1	8	10	12	19	22	27
1	8	10	12	19	23	27
1	8	10	12	19	24	27
1	8	10	12	19	25	27
1	8	10	12	19	26	27
1	8	10	12	19	27	
1	8	10	13	19	20	27
1	8	10	13	19	21	27
1	8	10	13	19	22	27
1	8	10	13	19	23	27
1	8	10	13	19	24	27
1	8	10	13	19	25	27
1	8	10	13	19	26	27
1	8	10	13	19	27	

1	27	0.015000	0.8100	0.1890
1	27	0.006000	0.7340	0.1873
1	27	0.003000	0.6940	0.1617
1	27	0.054000	0.7400	0.2073
1	27	0.036000	0.7140	0.1572
1	27	0.045000	0.6970	0.1510
1	27	0.006000	1.0140	0.1106
1	27	0.006000	0.8740	0.1871
1	27	0.007500	0.9000	0.1931
1	27	0.003000	0.8240	0.1915
1	27	0.001500	0.7840	0.1658
1	27	0.027000	0.8300	0.2115
1	27	0.018000	0.8040	0.1514
1	27	0.022500	0.7870	0.1551
1	27	0.003000	1.1040	0.1147
1	27	0.108000	0.9040	0.2281
1	27	0.135000	0.9300	0.2342
1	27	0.054000	0.8540	0.2325
1	27	0.027000	0.8140	0.2068
1	27	0.486000	0.8600	0.2525
1	27	0.324000	0.8340	0.2024
1	27	0.405000	0.8170	0.1962
1	27	0.054000	1.1340	0.1558
1	27	0.072000	0.8740	0.1776
1	27	0.090000	0.9000	0.1837
1	27	0.036000	0.8240	0.1820
1	27	0.018000	0.7840	0.1563
1	27	0.324000	0.8300	0.2020
1	27	0.216000	0.8040	0.1519

1	8	10	14	19	20	27
1	8	10	14	19	21	27
1	8	10	14	19	22	27
1	8	10	14	19	23	27
1	8	10	14	19	24	27
1	8	10	14	19	25	27
1	8	10	14	19	26	27
1	8	10	14	19	27	
1	8	10	15	19	20	27
1	8	10	15	19	21	27
1	8	10	15	19	22	27
1	8	10	15	19	23	27
1	8	10	15	19	24	27
1	8	10	15	19	25	27
1	8	10	15	19	26	27
1	8	10	15	19	27	
1	8	10	16	19	20	27
1	8	10	16	19	21	27
1	8	10	15	19	22	27
1	8	10	16	19	23	27
1	8	10	15	19	24	27
1	8	10	16	19	25	27
1	8	10	16	19	26	27
1	8	10	16	19	27	
1	8	10	17	19	20	27
1	8	10	17	19	21	27
1	8	10	17	19	22	27
1	8	10	17	19	23	27
1	8	10	17	19	24	27
1	8	10	17	19	25	27

1	27	0.036000	1.1040	0.1053
1	27	0.090000	0.8210	0.1747
1	27	0.112500	0.8470	0.1807
1	27	0.045000	0.7710	0.1790
1	27	0.022500	0.7310	0.1534
1	27	0.405000	0.7770	0.1990
1	27	0.270000	0.7510	0.1490
1	27	0.337500	0.7340	0.1427
1	27	0.045000	1.0510	0.1023
1	27	0.012000	1.1440	0.1314
1	27	0.015000	1.1700	0.1374
1	27	0.006000	1.0940	0.1358
1	27	0.003000	1.0540	0.1101
1	27	0.054000	1.1000	0.1558
1	27	0.036000	1.0740	0.1057
1	27	0.045000	1.0570	0.0995
1	27	0.006000	1.3740	0.0591
1	27	0.120000	1.1270	0.1152
1	27	0.150000	1.1530	0.1212
1	27	0.060000	1.0770	0.1196
1	27	0.030000	1.0370	0.0939
1	27	0.540000	1.0830	0.1396
1	27	0.360000	1.0570	0.0395
1	27	0.450000	1.0400	0.0833
1	27	0.060000	1.3570	0.0428
1	27	0.030000	0.8170	0.1700
1	27	0.037500	0.8430	0.1760
1	27	0.015000	0.7670	0.1743
1	27	0.007500	0.7270	0.1497
1	27	0.135000	0.7730	0.1943

1	8	10	17	19	27	
1	8	10	18	19	20	27
1	8	10	18	19	21	27
1	8	10	18	19	22	27
1	8	10	18	19	23	27
1	8	10	18	19	24	27
1	8	10	18	19	25	27
1	8	10	18	19	26	27
1	8	10	18	19	27	
1	8	10	19	20	27	
1	8	10	19	21	27	
1	8	10	19	22	27	
1	8	10	19	23	27	
1	8	10	19	24	27	
1	8	10	19	25	27	
1	8	10	19	26	27	
1	8	10	19	27		
1	9	10	11	19	20	27
1	9	10	11	19	21	27
1	9	10	11	19	22	27
1	9	10	11	19	23	27
1	9	10	11	19	24	27
1	9	10	11	19	25	27
1	9	10	11	19	26	27
1	9	10	11	19	27	
1	9	10	12	19	20	27
1	9	10	12	19	21	27
1	9	10	12	19	22	27
1	9	10	12	19	24	27
1	9	10	12	19	26	27

1	27	0.112500	0.7390	0.1390
1	27	0.015000	1.0470	0.0976
1	27	0.037500	0.9470	0.2052
1	27	0.046875	0.9740	0.2112
1	27	0.018750	0.8970	0.2096
1	27	0.007375	0.8570	0.1839
1	27	0.168750	0.9030	0.2796
1	27	0.112500	0.9770	0.1795
1	27	0.140625	0.8600	0.1732
1	27	0.018750	1.1770	0.1328
1	27	0.015000	0.7070	0.1667
1	27	0.018750	0.7330	0.1728
1	27	0.007500	0.6570	0.1711
1	27	0.003750	0.6170	0.1455
1	27	0.007500	0.6630	0.1911
1	27	0.045000	0.6370	0.1410
1	27	0.056250	0.6200	0.1348
1	27	0.007500	0.9370	0.0944
1	27	0.007500	0.7470	0.1709
1	27	0.009375	0.8230	0.1769
1	27	0.003750	0.7470	0.1753
1	27	0.001875	0.7070	0.1496
1	27	0.033750	0.7530	0.1953
1	27	0.022500	0.7270	0.1452
1	27	0.028125	0.7100	0.1389
1	27	0.003750	1.0270	0.0985
1	27	0.135000	0.8270	0.2119
1	27	0.168750	0.8530	0.2180
1	27	0.067500	0.7770	0.2153

1	9	10	12	19	25	27
1	9	10	12	19	26	27
1	9	10	12	19	27	
1	9	10	13	19	20	27
1	9	10	13	19	21	27
1	9	10	13	19	22	27
1	9	10	13	19	23	27
1	9	10	13	19	24	27
1	9	10	13	19	25	27
1	9	10	13	19	26	27
1	9	10	13	19	27	
1	9	10	14	19	20	27
1	9	10	14	19	21	27
1	9	10	14	19	22	27
1	9	10	14	19	23	27
1	9	10	14	19	24	27
1	9	10	14	19	25	27
1	9	10	14	19	26	27
1	9	10	14	19	27	
1	9	10	15	19	20	27
1	9	10	15	19	21	27
1	9	10	15	19	22	27
1	9	10	15	19	23	27
1	9	10	15	19	24	27
1	9	10	15	19	25	27
1	9	10	15	19	26	27
1	9	10	15	19	27	
1	9	10	16	19	20	27
1	9	10	16	19	21	27
1	9	10	16	19	22	27

1	27	0.607500	0.7830	0.2363
1	27	0.405000	0.7570	0.1862
1	27	0.506250	0.7400	0.1800
1	27	0.067500	1.0570	0.1396
1	27	0.090000	0.7970	0.1614
1	27	0.112500	0.8230	0.1575
1	27	0.045000	0.7470	0.1658
1	27	0.022500	0.7070	0.1401
1	27	0.405000	0.7530	0.1858
1	27	0.270000	0.7270	0.1357
1	27	0.337500	0.7100	0.1295
1	27	0.045000	1.0270	0.0891
1	27	0.112500	0.7440	0.1585
1	27	0.140625	0.7700	0.1645
1	27	0.056250	0.6940	0.1628
1	27	0.028125	0.6540	0.1372
1	27	0.506250	0.7000	0.1828
1	27	0.337500	0.6740	0.1328
1	27	0.421875	0.6570	0.1265
1	27	0.056250	0.9740	0.0861
1	27	0.015000	1.0670	0.1152
1	27	0.018750	1.0930	0.1213
1	27	0.007500	1.0170	0.1196
1	27	0.003750	0.9770	0.0939
1	27	0.067500	1.0230	0.1396
1	27	0.045000	0.9970	0.0995
1	27	0.056250	0.9800	0.0832
1	27	0.037500	1.2470	0.0429
1	27	0.016000	1.3840	0.0724
1	27	0.020000	1.4100	0.0794

1	9	10	16	19	24	27
1	9	10	16	19	25	27
1	9	10	16	19	26	27
1	9	10	16	19	27	
1	9	10	17	19	20	27
1	9	10	17	19	21	27
1	9	10	17	19	22	27
1	9	10	17	19	23	27
1	9	10	17	19	24	27
1	9	10	17	19	25	27
1	9	10	17	19	26	27
1	9	10	17	19	27	
1	9	10	18	19	20	27
1	9	10	18	19	21	27
1	9	10	18	19	22	27
1	9	10	18	19	23	27
1	9	10	18	19	24	27
1	9	10	18	19	25	27
1	9	10	18	19	26	27
1	9	10	18	19	27	
1	9	10	19	20	27	
1	9	10	19	21	27	
1	9	10	19	22	27	
1	9	10	19	23	27	
1	9	10	19	24	27	
1	9	10	19	25	27	
1	9	10	19	26	27	
1	9	10	19	27		
1	10	11	17	20	27	
1	10	11	17	21	27	

1	27	0.004000	1.2940	0.0511
1	27	0.072000	1.3400	0.0967
1	27	0.048000	1.3140	0.0467
1	27	0.050000	1.2970	0.0404
1	27	0.000000	1.6140	0.0000
1	27	0.004000	1.0740	0.1271
1	27	0.005000	1.1000	0.1332
1	27	0.002000	1.0240	0.1315
1	27	0.001000	0.9840	0.1058
1	27	0.018000	1.0300	0.1515
1	27	0.012000	1.0040	0.1014
1	27	0.015000	0.9870	0.0952
1	27	0.002000	1.3040	0.0548
1	27	0.005000	1.2040	0.1624
1	27	0.006250	1.2300	0.1684
1	27	0.002500	1.1540	0.1567
1	27	0.001250	1.1140	0.1411
1	27	0.022500	1.1600	0.1967
1	27	0.015000	1.1340	0.1367
1	27	0.018750	1.1170	0.1304
1	27	0.002500	1.4340	0.0900
1	27	0.002000	0.9640	0.1239
1	27	0.002500	0.9900	0.1299
1	27	0.001000	0.9140	0.1283
1	27	0.000500	0.8740	0.1026
1	27	0.009000	0.9200	0.1483
1	27	0.006000	0.8940	0.0982
1	27	0.007500	0.8770	0.0919
1	27	0.001000	1.1940	0.0515
1	27	0.001000	1.0540	0.1291

1	10	11	19	22	27
1	10	11	19	23	27
1	10	11	19	24	27
1	10	11	19	25	27
1	10	11	19	26	27
1	10	11	19	27	
1	10	12	19	20	27
1	10	12	19	21	27
1	10	12	19	22	27
1	10	12	19	23	27
1	10	12	19	24	27
1	10	12	19	25	27
1	10	12	19	26	27
1	10	12	19	27	
1	10	13	19	20	27
1	10	13	19	21	27
1	10	13	19	22	27
1	10	13	19	23	27
1	10	13	19	24	27
1	10	13	19	25	27
1	10	13	19	26	27
1	10	13	19	27	
1	10	14	19	20	27
1	10	14	19	21	27
1	10	14	19	22	27
1	10	14	19	23	27
1	10	14	19	24	27
1	10	14	19	25	27
1	10	14	19	26	27
1	10	14	19	27	

1	27	0.051250	1.0900	0.1341
1	27	0.000500	1.0040	0.1324
1	27	0.000250	0.9640	0.1068
1	27	0.004500	1.0100	0.1524
1	27	0.003000	0.9840	0.1024
1	27	0.003750	0.9670	0.0951
1	27	0.000500	1.2840	0.0557
1	27	0.019000	1.0840	0.1691
1	27	0.022500	1.1100	0.1751
1	27	0.009000	1.0340	0.1735
1	27	0.004500	0.9940	0.1478
1	27	0.081000	1.0400	0.1934
1	27	0.054000	1.0140	0.1434
1	27	0.067500	0.9970	0.1371
1	27	0.007000	1.3140	0.0967
1	27	0.012000	1.0540	0.1186
1	27	0.015000	1.0800	0.1246
1	27	0.006000	1.0040	0.1230
1	27	0.003000	0.9640	0.0973
1	27	0.054000	1.0100	0.1429
1	27	0.034000	0.9840	0.0929
1	27	0.045000	0.9670	0.0866
1	27	0.006000	1.2840	0.0452
1	27	0.015000	1.0010	0.1156
1	27	0.018750	1.0270	0.1217
1	27	0.007500	0.9510	0.1200
1	27	0.003750	0.9110	0.0943
1	27	0.067500	0.9570	0.1400
1	27	0.045000	0.9310	0.0899
1	27	0.056250	0.9140	0.0837
1	27	0.004500	1.2114	0.0644

1	10	15	19	21	27
1	10	15	19	22	27
1	10	15	19	23	27
1	10	15	19	24	27
1	10	15	19	25	27
1	10	15	19	26	27
1	10	15	19	27	
1	10	16	19	20	27
1	10	16	19	21	27
1	10	16	19	22	27
1	10	16	19	23	27
1	10	16	19	24	27
1	10	16	19	25	27
1	10	16	19	26	27
1	10	16	19	27	
1	10	17	19	20	27
1	10	17	19	21	27
1	10	17	19	22	27
1	10	17	19	23	27
1	10	17	19	24	27
1	10	17	19	25	27
1	10	17	19	26	27
1	10	17	19	27	
1	10	18	19	20	27
1	10	18	19	21	27
1	10	18	19	22	27
1	10	18	19	23	27
1	10	18	19	24	27
1	10	18	19	25	27
1	10	18	19	26	27

1	27	0.002000	1.3240	0.0724
1	27	0.002500	1.3500	0.0784
1	27	0.001000	1.2740	0.0767
1	27	0.000500	1.2340	0.0511
1	27	0.009000	1.2800	0.0967
1	27	0.006000	1.2540	0.0467
1	27	0.007500	1.2370	0.0404
1	27	0.001000	1.5540	0.0000

1	10	18	19	27
1	10	19	20	27
1	10	19	21	27
1	10	19	22	27
1	10	19	23	27
1	10	19	24	27
1	10	19	25	27
1	10	19	26	27
1	10	19	27	

GERT PROBLEM NO. C&S BY E P MILLER DATE 2/ 2/ 1972

LOOP DELETION VALUE, DEL # 0.0

EQUIVALENT BRANCHES OF THE NETWORK

ENTRY	EXIT	PROB	MEAN RHO	VAR RHO
1	27	41.482071	0.9717	0.2123

APPENDIX III, 4.d: Form of Input for GERT

(Excerpted from a manual provided by Dr. A. Alan B. Pritsker, Purdue University.)

USER MANUAL FOR GERT EXCLUSIVE-OR PROGRAM

The procedure for using a digital computer program for analyzing GERT networks containing only EXCLUSIVE-OR nodes is presented here. The programs are modifications of the original program developed at The RAND Corporation by A. B. Nelson. Background information on GERT is not included.

Three FORTRAN versions of a digital computer program are available for obtaining pertinent information for GERT networks containing only EXCLUSIVE-OR nodes. The utilization procedure described applies to the GE 225 FORTRAN II version and the IBM 1130 FORTRAN IV version. The input to these programs is identical (even though the two FORTRAN versions are slightly different). The FORTRAN IV version has been run on the CDC 3400 and the IBM 360/50.

The program determines the source nodes, the sink nodes, the paths connecting the source nodes to the sink nodes, and the loops of the network. The standard output from the program includes: (1) appropriate problem identification headings; (2) the paths and loops of a network; (3) the probability of realizing a sink node from any source node; and (4) the mean and variance of the time to realize a sink node, given that the sink node is realized

and given an initial source node. The option exists to delete the loop and/or path output for large or complex networks if it is so desired. The exercising of this option can be beneficial on machines having relatively slow printers (such as the IBM 1130) or on high speed printers where the standard operating practice is to have a relatively low print limit.

Input to the program includes appropriate problem identification information and the branches of the network. Information concerning each branch includes the start node and end node for the branch, the probability of realizing the branch, and data about the moment generating function (M.G.F.) of the random variable associated with the branch. The M.G.F. is described by a three-letter code and up to two parameters of the M.G.F. The program determines all paths and loops of the network based on the input information. The desired output statistics are computed using the values associated with the loops and paths of the network.

The reader is referred to the GERT report (100) for information concerning the method for calculating the output statistics. The definition of variables and the techniques employed in the program are described in a separate report. This only describes the input procedure, the output formats and the options available to the user. Examples to

illustrate these facets of the program are presented.

Program Operating Procedure

The input specification for the first data card to the program and the first data card for each network are given in Table 1. Each branch of a network must be described by a separate card as shown in Table 2. The equations and moments of the distributions that have been programmed are shown in Table 3. Since only the mean and variance of each branch is used in the calculation of the mean and variance of the system, other distributions can be accommodated by the program by specifying the normal distribution with mean and standard deviation values of the distribution of interest. Further, it can be shown that n^{th} central moment for the network only depends on j central moments of the branches, j=1, 2, . . . n. This should aid in developing programs for computing higher moments. The GE 225 and IBM 1130 versions of the program will accept an input network containing up to one hundred branches although, as will be demonstrated by the first example problem, storage limitations can result in a smaller problem being too large for the computer if there are many possible paths through a network. When this occurs, an error message is printed out and execution of the problem is terminated. The only restrictions placed on the numbering of nodes is that all node numbers must be positive integers greater

Table 1 - Input to GERT Program

FIRST CARD OF THE DATA INPUT DECK

The first card of the input deck is the means by which the distribution codes are placed in the machine. These codes are then used to check the distribution codes in the input network.

Field 1 (cc. 1-9) = ABDEGNOPU

FIRST CARD OF EACH INPUT NETWORK IN THE INPUT DECK (HEADER CARD)

The first card of each input network contains the user name and the problem identification. Also contained in this card are the three program control options available to the user.

Field	Card Columns	Definition
1	1-4	Blank
2	5-17	User Name
3	17-20	Problem Designation (right justified) may be any combination of alphabetic or numeric characters
4	21-22	Month (right justified)
5	23-24	Day (right justified)
6	25-28	Year
7	29-30	Loop printout control option: If blank, print loops; If positive, do not print loops
8	31-32	Path printout control option: If blank, print paths; If positive, do not print paths
9	33-42	Loop deletion probability (F10.8); if this is left blank, no loops will be deleted
10	43-44	Option for adjustment of the equivalent branch printout when the loop deletion option is exercised; if this is left blank, the actual calculated branch values are printed. If this field contains a positive number, the equivalent branch printout will be adjusted so that the probabilities for all equivalent branches emanating from a given source node sum to one.

Table 2 - Input to GERT Program for Each Branch of the Network

Each network is specified by defining its branches as shown below:

1. Node beginning the branch;
2. Node terminating the branch;
3. Type of distribution of time associated with the branch;
4. Probability of realizing the branch if its beginning node is realized; and
5. Coefficients defining the time distribution.

One data card is required for each branch of the network. The order of the data cards is not significant. The fields on each data card are:

Field	Card Columns	Definition
1	1-4	Node beginning branch (right justified)
2	6-9	Node terminating branch (right justified)
3	11-13	Type of distribution B, D, E, GA, GE, NB, NO, P, U (left justified)
4	14-20	The definition of these fields depends on the type of distribution (see below)
5	21-27	
6	28-34	
7	35-41	
8	42-48	The format for all fields if F7.3.
9	49-55	
10	56-62	
11	63-69	

Type of Distribution*	Field 4	5	6	7
B (Binomial)	Prob.	n	p	-
D (Discrete)	Prob. 1	T1	Prob. 2	T2
E (Exponential)	Prob.	1/a	-	-
GA(GAmma)	Prob.	1/a	b	-
GE(GEometric)	Prob.	p	-	-
NB(Neg. Binomial)	Prob.	r	p	-
NO(NOrmal)	Prob.	m	a	-
P (Poisson)	Prob.		-	-
U (Uniform)	Prob.	a	b	-

*See Table 3 for Definition of the Parameters

Table 2 (continued)

Type of Distribution*	Field 8	9	10	11
B (Binomial)	-	-	-	
D (Discrete)	Prob. 3	T3	Prob. 4	T4
E (Exponential)	-	-	-	-
GA(GAmma)	-	-	-	-
GE(GEometric)	-	-	-	-
NB(Neg. Binomial)	-	-	-	-
NO(NOrmal)	-	-	-	-
P (Poisson)	-	-	-	-
U (Uniform)	-	-	-	-

Table 3 - Distribution Acceptable to GERT Program

Type of Distribution	$M_E(s)$	Mean	Second Moment	Input Variables
Binomial (B)	$(pe^s+1-p)^n$	np	$np(np+1-p)$	$w_E(o);n,p$
Discrete (D)	$\frac{p_1e^{st_1}+p_2e^{st_2}+\ldots}{p_1+p_2+\ldots}$	$\frac{p_1T_1+p_2T_2+\ldots}{p_1+p_2+\ldots}$	$\frac{p_1T_1^2+p_2T_2^2+\ldots}{p_1+p_2+\ldots}$	$w_E(o);p_1,T_1,p_2,T_2;$
Exponential (E)	$(1 - s/a)^{-1}$	$1/a$	$.2/a^2$	$w_E(o);\ 1/a$
Gamma (GA)	$(1 - s/a)^{-b}$	b/a	$\frac{b(b+1)}{a^2}$	$w_E(o);1/a,b$
Geometric (GE)	$\frac{pe^s}{1-e^s+pe^s}$	$1/p$	$\frac{2-p}{p^2}$	$w_E(o);p$
Negative Binomial (NB)	$\left(\frac{p}{1-e^s+pe^s}\right)^r$	$\frac{r(1-p)}{p}$	$\frac{r(1-p)(1+r-rp)}{p^2}$	$w_E(o);r,p$

(Continued)

Table 3 - Distribution Acceptable to GERT Program
(Continued)

Type of Distribution	$M_E(s)$	Mean	Second Moment	Input Variables
Normal (NØ)	$e^{(sm+\frac{1}{2}s^2\sigma^2)}$	m	$m^2 + \sigma^2$	$w_E(o);m,\sigma$
Poisson (P)	$e^{\lambda(e^s-1)}$	λ	$\lambda(1+\lambda)$	$w_E(o);\lambda$
Uniform (U)	$\frac{e^{sa}-e^{sb}}{(a-b)s}$	$\frac{a+b}{2}$	$\frac{a^2+ab+b^2}{3}$	$w_E(o);a,b$

than zero and ≤100. Node numbers can be in any order, i.e., they do not have to be in ascending order as is the case in most CPM programs.

For the computer program only one branch can join a given start and end node. There can, however, be another branch between the two nodes if the roles of the start node and end node are reversed as is shown below:



Not Permissible Permissible

If the network of interest has more than one branch between the same two nodes as shown on the previous page on the left, then either: (1) the techniques discussed in the GERT report (100) should be used to reduce the parallel paths to their equivalent single path prior to inputting the network into the computer program; or (2) a dummy node should be inserted for one of the branches as shown below:

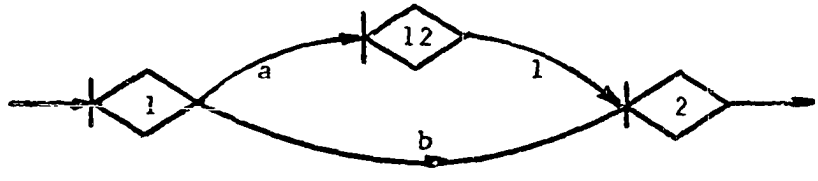

Program control options are included to allow the user to decide whether or not the loops and paths of the network are to be printed. For networks having a large number of

loops and paths it may be beneficial to delete the printing of the loops and/or paths. The nodes associated with loops and paths are printed depending on the values inserted into Fields 7 and 8 of the heading card associated with a network. An option to delete high order loops which have a low probability of occurrence can be exercised through Field 9 of data card 1. If this option field is left blank, all loops will be considered. If, however, loops should be deleted that have a probability of realization less than or equal to δ then δ can be read in as the deletion probability in Field 9 and no loops with lower probabilities will be included. The effect upon the accuracy of the results for the equivalent network will depend upon the size the complexity of the network as well as the magnitude of δ. Since the deletion of higher order loops having low probability of occurrence introduces some error into the final output, the probabilities for all equivalent branches of the network emanating from a given source node may not sum to one. The user can cause the program to adjust the probabilities so that they sum to one by the value specified in Field 10 of the first data card. The mean and variance of the time to traverse the equivalent branch are adjusted by dividing by the non-adjusted probabilities.

Multiple networks can be analyzed by separating the data decks with a blank card. The last data deck should be followed by a blank card and a card with a negative value in columns 1-4.