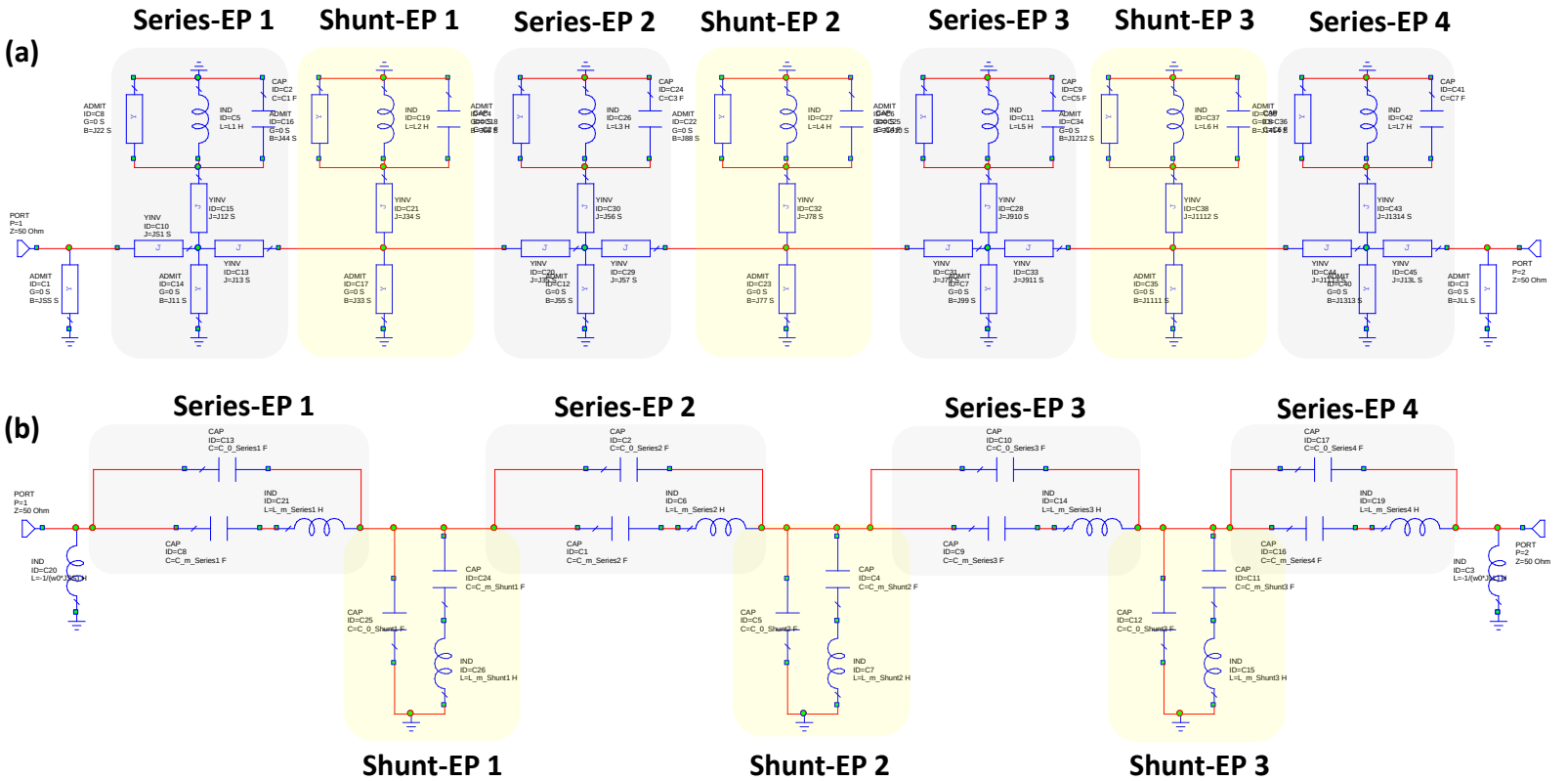
(a)
Series-EP 1
Shunt-EP 1
Series-EP 2
Shunt-EP 2
Series-EP 3
Shunt-EP 3
Series-EP 4
(b)
Series-EP 1
Series-EP 2
Series-EP 3
Series-EP 4
Shunt-EP 1
Shunt-EP 2
Shunt-EP 3