INFORMATION TO USERS

This dissertation was produced from a microfilm copy of the original document. While the most advanced technological means to photograph and reproduce this document have been used, the quality is heavily dependent upon the quality of the original submitted.

The following explanation of techniques is provided to help you understand markings or patterns which may appear on this reproduction.

1. The sign or "target" for pages apparently lacking from the document photographed is "Missing Page(s)". If it was possible to obtain the missing page(s) or section, they are spliced into the film along with adjacent pages. This may have necessitated cutting thru an image and duplicating adjacent pages to insure you complete continuity.

2. When an image on the film is obliterated with a large round black mark, it is an indication that the photographer suspected that the copy may have moved during exposure and thus cause a blurred image. You will find a good image of the page in the adjacent frame.

3. When a map, drawing or chart, etc., was part of the material being photographed the photographer followed a definite method in "sectioning" the material. It is customary to begin photoing at the upper left hand corner of a large sheet and to continue photoing from left to right in equal sections with a small overlap. If necessary, sectioning is continued again — beginning below the first row and continuing on until complete.

4. The majority of users indicate that the textual content is of greatest value, however, a somewhat higher quality reproduction could be made from "photographs" if essential to the understanding of the dissertation. Silver prints of "photographs" may be ordered at additional charge by writing the Order Department, giving the catalog number, title, author and specific pages you wish reproduced.

University Microfilms

300 North Zeeb Road
Ann Arbor, Michigan 48106

A Xerox Education Company

Downloaded from SHAREOK. Persistent Handle URL: https://hdl.handle.net/11244/3337

72-29,877

DWIVEDI, Indresh Hari, 1953-
GRAVITY'S EFFECT ON POLARIZATION.

The University of Oklahoma, Ph.D., 1972
Physics, general

University Microfilms, A XEROX Company, Ann Arbor, Michigan

THIS DISSERTATION HAS BEEN MICROFILMED EXACTLY AS RECEIVED

THE UNIVERSITY OF OKLAHOMA

GRADUATE COLLEGE

GRAVITY'S EFFECT ON POLARIZATION

A Dissertation

Submitted to the Graduate Faculty

in partial fulfillment of the requirements for the degree of

Doctor of Philosophy

By

INDRESH HARI DWIVEDI

Norman, Oklahoma

June

1972

GRAVITY'S EFFECT ON POLARIZATION

A DISSERTATION

APPROVED FOR THE DEPARTMENT OF PHYSICS

APPROVED BY

Ronald Kantowski

Arthur Bernhart

Jack Cohn

R. R. Bowrassa

J. N. Huffaker

THESIS COMMITTEE

PLEASE NOTE:

Some pages may have

indistinct print.

Filmed as received.

University Microfilms, A Xerox Education Company

ACKNOWLEDGEMENT

I want to express my appreciation to Dr. Ronald Kantowski for suggesting this topic and helping along the way.

The author also desires to thank Professor Jack Cohn, Dr. Ronald Bourassa, Dr. Neal Huffaker and Dr. Arthur Bernhart for reading the manuscript and for giving some useful suggestions.

This work is devoted to my Pitaji Dr Shankerhari Dwivedi and Babhi Uma Sundri Devi and for without whose encouragement, Patint this dissertation would never have been completed.

I also want to extend my appreciation to Shri N. S. Gautam and Srimati Vimla Rani Gautam for helping me in several other ways which helped me to finish this dissertation rather quickly.

LIST OF ILLUSTRATIONS

Figure		Page
1.	Definition of impact parameter ℓ and $\Delta\phi$	21
2.	Motion of a light beam in Schwarzschild field	23
3.	Graph (R vs. ℓ)	29
4.	Motion of a light beam in the presence of an inhomogeneity	32
5.	Construction of a null tetrad	37

TABLE OF CONTENTS

Page

ACKNOWLEDGEMENT. . . . . .

LIST OF ILLUSTRATIONS. . . . . .

CHAPTER

1. INTRODUCTION. 1

2. GEOMETRICAL OPTICS AND MAXWELL'S EQUATIONS. . . . 2

3. FIRST ORDER EFFECT ON POLARIZATION. 14

4. APPLICATIONS. 19

5. CONCLUSION. 35

APPENDIXES

1. PARALLEL TRANSPORTED NULL TETRADS AND SELF-DUAL BIVECTORS. 37

2. MAXWELL'S EQUATIONS. 41

3. FIRST ORDER CORRECTIONS TO GEOMETRICAL OPTICS. 44

BIBLIOGRAPHY. 52

CHAPTER 1

INTRODUCTION

Geometrical optics was created to explain the nature and behavior of light and although it provides information about the reflection, refraction, and the intensity of light rays, it fails to furnish information about polarization, interference, and diffraction. To take these latter phenomena into account geometrical optics has been extended to higher order optics. So far no attempt has been made to find observable differences predicted by these two theories in a curved space time. In this thesis, we make such an attempt, we examine the effect of a gravitational field on the polarization of an electromagnetic wave moving in a curved space time.

In order to estimate the effect of gravity on polarization we must go to higher order terms in wave length than just the geometrical optics limit. We therefore present in the next chapter the theory of higher optics in the context of general relativity. We devote chapter 3 to calculating the effect of a gravitational field on polarization and in the fourth chapter we apply our results to various types of gravitational fields that exist in nature.

CHAPTER 2

GEOMETRICAL OPTICS AND MAXWELL'S EQUATIONS

We intend to explore the relationship between geometrical optics (the branch of optics characterized by the neglect of wave length) and Maxwell's electromagnetic theory in the context of general relativity.

In order to solve optics problems whether in the range of radio frequencies or light frequencies, one must solve Maxwell's equations with initial and boundary conditions. Since Maxwell's equations can be solved exactly for very few real problems one frequently resorts to the simpler methods of geometrical optics. Although these methods have proved remarkably accurate in the optical domain, they are very much limited. They do not furnish information about interference, polarization, or diffraction and say nothing about numerical accuracy.

There have been two significant developments so far which connect geometrical optics and Maxwell's theory. The first one is due to Sommerfeld and Runge[1] and in their treatment a function u, which may represent some component of $\vec{E}$ or the Hertz vector, is assumed to satisfy a reduced scaler wave equation

$$\Delta u + k^2 u = 0 \ ,$$

where $k = (\varepsilon_0\mu_0)^{\frac{1}{2}}\frac{\omega}{c} = \frac{2\pi}{\lambda}$. The solutions sought are of the form

$$u = A(x,y,z)e^{i(kS(x,y,z) - ct)} ,$$

where A is the amplitude of the wave and S is the phase. By requiring that the assumed solution satisfies the above scaler wave equation and letting $k \to \infty$ we get the eikonal equation for the phase and a differential equation for the amplitude A.

The second development is due to Luneburg[2] who introduced the notion of an asymtotic series solution of Maxwell's equations in which the geometrical optics field is the first term. He considered solution of the type

$$\vec{E} = e^{i(kS - ct)}\{\vec{A}_0 + \frac{\vec{A}_1}{\omega} + \frac{\vec{A}_2}{\omega^2} + \cdots\cdots\} ,$$

$$\vec{B} = e^{i(kS - ct)}\{\vec{B}_0 + \frac{\vec{B}_1}{\omega} + \frac{\vec{B}_2}{\omega^2} + \cdots\cdots\} . \qquad (2.1)$$

If $\vec{E}$ and $\vec{B}$ in equation (2.1) are required to satisfy Maxwell's equations to all orders in $\frac{1}{\omega}$, we find that S satisfies the eikonal equation and vectors $\vec{A}_n$, $\vec{B}_n$ satisfy some differential equations. The zero order terms represent the geometrical optics field and higher order terms are corrections to geometrical optics.

Now let us consider the case of curved space time and relate geometrical optics and Maxwell's equations. We will follow the development given by Ehlers[3] who first writes the electric and magnetic fields

in terms of a self dual bivector and then does an expansion similar to Luneburg.

The source free Maxwell equations in vacuum for a curved space time are given by[4]

$$F^{ab}{}_{;b} = 0 \ , \tag{2.2}$$

$$F^{*ab}{}_{;b} = 0 \Leftrightarrow F_{ab,c} + F_{bc,a} + F_{ca,b} = 0 \ , \tag{2.3}$$

where ';' represents covariant differentiation, i.e.

$$V^{a}{}_{;b} \equiv \frac{\partial V^{a}}{\partial X^{b}} + \{{}^{a}_{bd}\}V^{d} \ ,$$

$$V^{ac}{}_{;b} \equiv \frac{\partial V^{a}}{\partial X^{b}} + \{{}^{a}_{bd}\}V^{dc} + \{{}^{c}_{bd}\}V^{ad} \ ,$$

and $\{{}^{a}_{bd}\}$ are the usual Christoffel symbols. F_{ab} is the electromagnetic field tensor and F^{*ab} is the dual of F^{ab}. (See equation A1.6). If we define a bivector

$$G^{ab} = F^{ab} + iF^{*ab} \ , \tag{2.4}$$

we see that it is self dual, <u>i.e.</u> $G^{*}_{ab} = -iG_{ab}$, and that Maxwell's equations (2.2) and (2.3) can be replaced by a single equation

$$G^{ab}{}_{;b} = 0 \ . \tag{2.5}$$

The electric and magnetic fields, as seen by an observer with four velocity u^{a} are related to $G^{ab}u_{b}$.

$$E^{a} - iB^{a} = G^{ab}u_{b} \ . \tag{2.6}$$

The above relation defines the electric and magnetic fields only for the observer with four velocity u^{a}. The above relation also states that ε^{4} and B^{4} (time components of $\vec{E}$ and $\vec{B}$) in the observers rest frame are always zero.

In order to relate geometrical optics and Maxwell's theory we consider a power series solution of the type

$$G^{ab}(x^c,\varepsilon) = G_+^{ab}(x^c,\varepsilon)e^{iS(x^d)/\varepsilon} + G_-^{ab}(x^c,\varepsilon)e^{-iS(x^d)/\varepsilon}$$

$$= \{ \sum_{n=0}^{\infty} \varepsilon^n G_+^{ab}(n) \} e^{iS/\varepsilon} + \{ \sum_{n=0}^{\infty} \varepsilon^n G_-^{ab}(n) \} e^{-iS/\varepsilon} , \tag{2.7}$$

where S is a real scaler phase function, ε is a real parameter and $G_{\pm}^{ab}(n)$ are self dual bivectors. Positive and negative phase represent the right and left circularly polarized waves and ε is related to the wave length (see equation 3.11).

If we require G^{ab} in equation (2.7) to satisfy Maxwell's equation (2.5) to all orders of ε we get

$$G_{\pm}^{ab}(0)S_{,b} = 0 , \tag{2.8}$$

$$G_{\pm}^{ab}(0)S^{,c} + G_{\pm}^{bc}(0)S^{,a} + G_{\pm}^{ca}(0)S^{,b} = 0 , \tag{2.9}$$

$$G_{\pm}^{ab}(n)_{;b} \pm iG_{\pm}^{ab}(n+1)S_{,b} = 0 . \tag{2.10}$$

Contracting equation (2.9) with $S_{,c}$ gives

$$G_{\pm}^{ab}(0)S^{,c}S_{,c} + G_{\pm}^{bc}(0)S^{,a}S_{,c} + G_{\pm}^{ca}(0)S_{,c}S^{,b} = 0 . \tag{2.11}$$

From equations (2.8) and (2.11) we get

$$G_{\pm}^{ab}(0)S_{,c}S^{,c} = 0 . \tag{2.12}$$

From equation (2.12) it follows that the phase function satifies

$$g^{ab}S_{,a}S_{,b} = 0 \ . \tag{2.13}$$

Since $S_{,a;b} - S_{,b;a} = 0$, equation (2.13) implies

$$S_{,a;b}S^{,b} = 0 \ . \tag{2.14}$$

Equation (2.13) is the well known eikonal equation and says that S = constant is a null hypersurface. Equation (2.14) implies that $k_a = S_{,a}$ is tangent to a set of null (lightlike) geodesics. Equation (2.8) says that $G^{ab}_{\pm}(0)$ is a null bivector with eigenvector $k_a \cong S_{,a}$.

The normals $k_a = S_{,a}$ to the null hypersurface S = constant give us a null congurence and allow us to construct parallel transported null tetrads at every point in space time (see appendix A1). The self dual bivectors $G^{ab}_{\pm}(n)$ can be written in terms of the null tetrad (see equation A1.9),

$$G^{ab}_{\pm}(n) = A_{\pm}(n)V^{ab} + B_{\pm}(n)U^{ab} + C_{\pm}(n)M^{ab} \ . \tag{2.15}$$

The geometrical optics approximation is identified with the high frequency limit <u>i.e</u> $\varepsilon \to 0$

$$G^{ab} = G^{ab}_{+}(0)e^{iS/\varepsilon} + G^{ab}_{-}(0)e^{-iS/\varepsilon} \ , \tag{2.16}$$

where $G^{ab}_{\pm}(0) = A_{\pm}(0)V^{ab} + B_{\pm}(0)U^{ab} + C_{\pm}(0)\ M^{ab}$.

Maxwell's equations appear as differential equations obeyed by $A_{\pm}(n)$, $B_{\pm}(n)$, and $C_{\pm}(n)$. To find these we put equation (2.15) in equations (2.8) and (2.10), we get

$$B_{\pm}(0) = C_{\pm}(0) = 0 ,$$

$$\dot{A}_{\pm} + A_{\pm}\Theta = 0 . \tag{2.17}$$

For n-th order corrections we get,

$$\dot{A}_{\pm}(n) + A_{\pm}(n)\Theta - C_{\pm}(n)_{,t} - B_{\pm}(n)\bar{\sigma}' = 0 , \tag{2.18}$$

$$\dot{C}_{\pm}(n) + 2C_{\pm}(n)\Theta = B_{\pm}(n)_{,t} - B_{\pm}(n)\{\bar{\alpha} + \xi\} , \tag{2.19}$$

$$B_{\pm}(n)_{,m} + C_{\pm}(n)_{,\bar{t}} + B_{\pm}(n)\{\Theta' - \gamma - Q\} - A_{\pm}(n)\sigma - 2C_{\pm}(n)\alpha$$

$$\pm iB_{\pm}(n+1) = 0 , \tag{2.20}$$

$$A_{\pm}(n)_{,\bar{t}} + C_{\pm}(n)_{,m} - A_{\pm}(n)\bar{\xi} + 2C_{\pm}(n)\Theta' + B_{\pm}(n)\delta$$

$$\pm iC_{\pm}(n+1) = 0 , \tag{2.21}$$

where

$$' = k_a\nabla^a ,$$

$$,_m = m^a \nabla a \ ,$$

$$,_t = t_a \nabla^a \ ,$$

and

$$\Theta = \bar{t}^a k_{a;b} t^b \ ,$$

$$\sigma = \bar{t}^a k_{a;b} \bar{t}^b \ ,$$

$$\alpha = \bar{t}^a k_{a;b} m^b \ ,$$

$$\gamma = m^a k_{a;b} m^b \ ,$$

$$\xi = t^a \bar{t}_{a;b} t^b \ ,$$

$$\Theta' = \bar{t}^a m_{a;b} t^b \ ,$$

$$\sigma' = \bar{t}^a m_{a;b} \bar{t}^b \ ,$$

$$\delta = \bar{t}^a m_{a;b} m^b \ ,$$

$$Q = t^a \bar{t}_{a;b} m^b \ ,$$

are the scalars associated with the tetrad.

Now let us take a look at the four differential equations (2.18), (2.19),(2.20),and (2.21). Equation (2.19) is a consequance of equations (2.18), (2.20),and (2.21) (see appendix A2). Equations (2.18), (2.20),and (2.21) are the ones we will use to find $A_{\pm}(n)$, $B_{\pm}(n)$,and $C_{\pm}(n)$. The procedure to find these n-th order terms is as follows.

First one finds the null tangent vector k_a and calculates

the tetrad field. Next one evaluates all scalars associated with the tetrad and integrates equation (2.17) for $A_{\pm}(0)$. The remaining equations (2.18), (2.20), and (2.21) are solved by an iterative process. Knowing $A_{\pm}(n)$, $B_{\pm}(n)$, and $C_{\pm}(n)$ equations (2.20) and (2.21) are solved for $B_{\pm}(n+1)$ and $C_{\pm}(n+1)$. Knowing $B_{\pm}(n+1)$ and $C_{\pm}(n+1)$ equation (2.18) is then solved for $A_{\pm}(n+1)$.

In this thesis we will look at only the first order terms and they are given by

$$B_{\pm}(1) = \mp iA_{\pm}(0)\sigma \ , \tag{2.22}$$

$$C_{\pm}(1) = \pm i\{A_{\pm}(0),_{\bar{t}} - A_{\pm}(0)\bar{\xi}\} \ , \tag{2.23}$$

$$A_{\pm}(1) = \pm iA_{\pm}(0)f_{\pm} \ , \tag{2.24}$$

where $f_{\pm}$ satisfies

$$f_{\pm}' = \{ \frac{A_{\pm}(0),_{\bar{t}},_{t}}{A_{\pm}(0)} - \frac{A_{\pm}(0),_{t}\,\bar{\xi}}{A_{\pm}(0)} - \bar{\xi},_{t} - \sigma\bar{\sigma}'\} \ . \tag{2.25}$$

Equation (2.25) is difficult to integrate , however, if one is interested only in polarization effects $B_{\pm}(1)$ is all that is needed. We have integrated equation (2.25) to get the exact first order correction terms to geometrical optics in a Schwarzschild gravitational field. Interested readers should see appendix A3.

For a reader who is not familiar with self dual bivectors ,

the concept of using them to represent electromagnetic fields is rather difficult to understand. We give an example to clear the air. Let us consider the simple case of classical electric dipole radiation. For a source at the origin and lined up with z axis, the far, intermediate, and near fields are given by [5]

$$\vec{E} = \vec{E}(0) + \vec{E}(1) + \vec{E}(2) ,$$

$$\vec{B} = \vec{B}(0) + \vec{B}(1) + \vec{B}(2) ,$$

where

$$\vec{E}(0) = - \frac{pk^2 \sin\theta \cos(kS)}{r} \vec{e}_\theta ,$$

$$\vec{B}(0) = - \frac{pk^2 \sin\theta \cos(kS)}{r} \vec{e}_\phi ,$$

$$\vec{E}(1) = \frac{pk \sin(kS)}{r^2} \{2\cos\theta \, \vec{e}_r + \sin\theta \, \vec{e}_\theta\},$$

$$\vec{B}(1) = \frac{pk \sin(kS)}{r^2} \vec{e}_\phi ,$$

$$\vec{E}(2) = \frac{p}{r^3} \{2\cos\theta \, \vec{e}_r + \sin\theta \, \vec{e}_\theta\} \cos(kS) ,$$

$$\vec{B}(2) = \vec{0} ,$$

where $S = r - ct$, $k = \frac{\omega}{c}$, and p is the electric dipole moment. $\vec{e}_\theta, \vec{e}_\phi$ and $\vec{e}_r$ are unit polar vectors. The $\vec{E}$ and $\vec{B}$ are the ones seen by an observer with four velocity $u^a = (1, \vec{0})$. The surfaces S = constant are the forward null cones.

$$S = r - ct, \quad \Rightarrow \quad k^a = \frac{1}{\sqrt{2}}(1,1,0,0) .$$

The other tetrad vectors can be taken as

$$t^a = \frac{1}{\sqrt{2}}(0,0,1,i) \equiv \frac{1}{\sqrt{2}}\{\vec{e}_\theta + i\vec{e}_\phi\} .$$

$$m_a = \frac{1}{\sqrt{2}}(1,1,0,0) .$$

The non-vanishing components of $E^a - iB^a = G^{ab}u_b$ are the spatial components

$$\vec{E} - i\vec{B} = \{\vec{E}(0) - i\vec{B}(0)\} + \{\vec{E}(1) - i\vec{B}(1)\} + \{\vec{E}(2) - i\vec{B}(2)\}.$$

$$\vec{E}(0) - i\vec{B}(0) = -\frac{pk^2}{r}\sin\theta\cos(kS)\{\vec{e}_\theta - i\vec{e}_\phi\} ,$$

$$= -\frac{pk^2}{r}\sin\theta\, 2(k^a u_a)\bar{t}^b\cos(kS) ,$$

$$= G^{ab}(0)u_b ,$$

where $G^{ab}(0) = -\frac{pk^2}{r}\sin\theta\cos(kS)\, k^{[a}\bar{t}^{b]}$.

$$\vec{E}(1) - i\vec{B}(1) = \frac{pk}{r^2}\sin\theta\sin(kS)\{\vec{e}_\theta - i\vec{e}_\phi\} + \frac{2pk}{r^2}\cos\theta\sin(kS)\vec{e}_r,$$

$$= \frac{Pk}{r^2}\{\sin\theta\,\bar{t}^a + \sqrt{2}\cos\theta(k^a + m^a)\}\sin(kS),$$

$$= G^{ab}(1)u_b ,$$

where $G^{ab}(1) = \frac{pk}{r^2}\sin(kS)\{\sin\theta\, k^{[a}\bar{t}^{b]} + 2\cos\theta\,(k^{[a}m^{b]} + \bar{t}^{[a}t^{b]})\}$.

$$\vec{E}(2) - i\vec{B}(2) = \frac{p}{r^3}\cos(kS)\{2\cos\theta\,\vec{e}_r + \sin\theta\,\vec{e}_\phi\},$$

$$= \frac{p}{r^3}\cos(kS)\{\sqrt{2}\cos\theta\,(k^a + m^a) + \sin\theta(t^a + \bar{t}^a)\},$$

$$= G^{ab}(2)u_b \ ,$$

where $G^{ab}(2) = \frac{p}{r^3}\cos(kS)\{2\cos\theta(k[a_m b] + \bar{t}[a_t b]) + \sin\theta(k[a\bar{t}b] - m[a_t b])\}$.

G^{ab} can be written in a power series of ε ($\varepsilon = \frac{\lambda}{2\pi} = \frac{1}{k}$)

$$G^{ab} = G_+^{ab} e^{iS/\varepsilon} + G_-^{ab} e^{-iS/\varepsilon} \ ,$$

where $G_\pm^{ab} = G_\pm^{ab}(0) + \varepsilon G_\pm^{ab}(1) + \varepsilon^2 G_\pm^{ab}(2)$,

and where $G_\pm^{ab}(n) = A_\pm(n)k[a\bar{t}b] + B_\pm(n)m[a_t b] + C_\pm(n)\{k[a_m b] + \bar{t}[a_t b]\}$.

The coefficients $A_\pm(n)$, $B_\pm(n)$ and $C_\pm(n)$ are

$$A_\pm(0) = -\frac{p\omega^2}{c^2 r}\sin\theta \ ,$$

$$B_\pm(0) = C_\pm(0) = 0 \ ,$$

$$A_\pm(1) = \pm\frac{ip\omega^2}{c^2 r^2}\sin\theta \ ,$$

$$B_\pm(1) = 0 \ ,$$

$$C_\pm(1) = \pm\frac{2ip\omega^2}{c^2 r^2}\cos\theta \ ,$$

$$B_\pm(2) = -A_\pm(2) = \frac{p\omega^2 \sin\theta}{c^2 r^3} \ ,$$

and

$$C_\pm(2) = \frac{p\omega^2}{c^2 r^3}\cos\theta \ .$$

The geometrical optics terms are

$$G^{ab} = G_{+}^{ab}(0)e^{iS/\varepsilon} + G_{-}^{ab}(0)e^{-iS/\varepsilon} ,$$

$$G_{\pm}^{ab}(0) = -\frac{p\omega^2}{c^2 r}\sin\theta\, k\left[\frac{a}{t}-b\right].$$

CHAPTER 3

FIRST ORDER EFFECT ON POLARIZATION

We will examine gravity's effect on polarization by restricting our attention to circularly polarized electromagnectic waves. We will start with a circularly polarized wave at a source and see how a gravitational field affects it as it propagates through a curved space time.

It is common practice to characterize the state of polarization by Stokes parameteres s_1, s_2, s_3 and s_0 which are defined by[2]

$$s_1 = s_0 \cos 2\chi \cos 2\theta ,$$
$$s_2 = s_0 \cos 2\chi \sin 2\theta ,$$
$$s_3 = s_0 \sin 2\chi ,$$

where χ characterizes the ellipticity and the sense in which the ellipse is being described, θ specifies the orientation of the ellipse and $s_0 = (s_1^2 + s_2^2 + s_3^2)^{\frac{1}{2}}$ is proportional to the total intensity of the wave. Right or left handed circularly polarized waves are characterized by $s_1 = s_2 = 0$ and linearly polarized waves by $s_3 = 0$.

We can take the quantity

$$P = \frac{(s_1^2 + s_2^2)^{\frac{1}{2}}}{s_0} \quad , \tag{3.1}$$

as a measure of the effect of gravity on polarization. Physically P represent the ratio of the part of the intensity of the wave which is linearly polarized to the total intensity of the wave. If we put a circularly polarized wave in a gravitational field then P will tell us how much of the wave has become linearly polarized. P defined above can be related in a simple way to the maximum and minimum values of E^2 (i.e., the lengths of the major and minor axis of the ellipse described by the electric vector of the wave)

$$P = \frac{(s_1^2 + s_2^2)^{\frac{1}{2}}}{s_0} = \cos 2\chi \quad . \tag{3.2}$$

Since

$$\tan\chi = \pm \frac{\surd E^2_{max}}{\surd E^2_{min}} \quad , \tag{3.3}$$

where ± represent the polarization (right and left handed) and E^2_{max}, E^2_{min} are the maximum and minimum values of E^2, the P in equation (3.2) reduces to

$$P = \frac{E^2_{max} - E^2_{min}}{E^2_{max} + E^2_{min}} \quad . \tag{3.4}$$

In equation (2.6) we have given the electric and magnetic fields seen by an observer with four velocity u^a,

$$\mathcal{E}^a = E^a - iB^a = G^{ab}u_b \ .$$

Assuming that the electromagnetic wave is elliptically polarized the maximum and minimum values of E^2 are given by

$$\begin{aligned} E^2_{max} &= \{\mathcal{E}^a\bar{\mathcal{E}}_a + |\mathcal{E}^a\mathcal{E}_a|\} \ , \\ E^2_{min} &= \{\mathcal{E}^a\bar{\mathcal{E}}_a - |\mathcal{E}^a\mathcal{E}_a|\} \ . \end{aligned} \tag{3.5}$$

Putting equation (3.5) in equation (3.4) we get for P

$$P = \frac{|\mathcal{E}^a\mathcal{E}_a|}{\mathcal{E}^a\bar{\mathcal{E}}_a} \ . \tag{3.6}$$

Restricting ourself to right or left circularly polarized waves at the source and then using equation (2.7) and equation (2.15) to evaluate the scalar products $|\mathcal{E}^a\mathcal{E}_a|$ and $\mathcal{E}^a\bar{\mathcal{E}}_a$, we get

$$\begin{aligned} |\mathcal{E}^a\bar{\mathcal{E}}_a| &= |G^{ac}G_{cb}u_a u^b| \\ &= |\{-2A_{\pm}B_{\pm}(k_a m_b + m_a k_b) + C^2_{\pm}\, g_{ab}\}u^a u^b| \\ &= |A_{\pm}B_{\pm} - C^2_{\pm}| \ , \end{aligned} \tag{3.7}$$

and

$$\mathcal{E}^{a}\bar{\mathcal{E}}_{a} = \{\,|A_{\pm}|^2(k^a u_a)^2 - |B_{\pm}|^2(m_a u^a)^2 + |C_{\pm}|^2\,(k_a u^a)(m^b u_b)$$

$$- |C_{\pm}(u^a t_a)|^2 - \{A_{\pm}\bar{B}_{\pm}(u_a \bar{t}^a) - \bar{A}_{\pm}B_{\pm}(u^a t_a)\}k^b u_b$$

$$+ 2A_{\pm}\bar{C}_{\pm}(k^a u_a)(u^b \bar{t}_b) + 2\bar{A}_{\pm}C_{\pm}(k^a u_a)(t^b u_b)$$

$$+ 2\bar{B}_{\pm}C_{\pm}(u_a m^a)(u^b \bar{t}_b) + 2B_{\pm}\bar{C}_{\pm}(m^a u_a)(t^b u_b)\,\} \,. \tag{3.8}$$

Putting equation(3.7) and equation (3.8) in equation (3.6) and taking the terms only up to first order in ε we get for P

$$P = \frac{\varepsilon|A_{\pm}(0)\ B_{\pm}(1)|}{|A_{\pm}(0)|^2(k^a u_a)^2} \,. \tag{3.9}$$

Using equation (2.22) P reduces to

$$P = \frac{\varepsilon|\sigma|}{(k^a u_a)^2} \,. \tag{3.10}$$

Since ε is related to the wave length by

$$\frac{\varepsilon}{(k^a u_a)} = \frac{\lambda}{2\pi} \,, \tag{3.11}$$

P in equation (3.10) becomes

$$P = \frac{\lambda|\sigma|}{2\pi(k^a u_a)} . \tag{3.12}$$

The above formula has been developed only for right and left circularly polarized waves, however, the effect on unpolarized waves should be no larger because unpolarized waves can be written as linear combinations of circularly polarized ones.

Equation (3.12) tells us that the first order effect on polarization is proportional to the shear (σ) introduced into the light waves. Shear is usually introduced into the rays of geometrical optics by an inhomogeneous index of refraction, however, in curved space time the gravitational field itself can distort the light rays and produce shear. In the next chapter we will look at several applications where shear (σ) becomes large and where P is most likely to be measurable.

CHAPTER 4

APPLICATIONS

In the preceding chapter we investigated gravity's effect on polarization and found it to be proportional to shear. In this chapter we apply our result to light waves propagating in (1) a Schwarzschild space time (2) an inhomogeneous universe. In order to evaluate P, the shear introduced into the light waves must be calculated for each case. The shear (σ) can be calculated by integrating the optical scalar equations along the central null geodesics,[6]

$$\theta' + \theta^2 + |\sigma|^2 = \tfrac{1}{2} R_{ij} k^i k^j \ , \tag{4.1}$$

$$\sigma' + 2\sigma\theta = R_{dabc} k^d k^c \bar{t}^a \bar{t}^b \ , \tag{4.2}$$

where (') represents differentiation with respect to an affine parameter of the central null ray. The expansion coefficient θ is real and shear is in general complex. The procedure for finding σ is to evaluate the driving terms of equations (4.1) and (4.2) along the central null geodesic and then integrate with appropriate initial conditions.

A

SCHWARZSCHILD GRAVITATIONAL FIELD

Before proceeding with our application let us give a brief review of the motion of light rays in a Schwarzschild field. The metric which gives us the gravitational field is

$$ds^2 = (1 - \frac{2m}{r})^{-1}dr^2 + r^2(\sin^2\theta d\phi^2 + d\theta^2) - (1 - \frac{2m}{r})dt^2 ,$$

where m is the Schwarzschild mass*. Orienting the coordinates such that $\theta = \frac{\pi}{2}$ and $\dot{\theta} = 0$ for our light ray the tangent vector must obey

$$0 = (1 - \frac{2m}{r})^{-1}dr^2 + r^2d\phi^2 - (1 - \frac{2m}{r})dt^2 .$$

The components of the tangent vector are easily calculated to be

$$\begin{aligned} k^t &= \frac{dt}{d\lambda} = \frac{k}{(1 - \frac{2m}{r})} , \\ k^\phi &= \frac{d\phi}{d\lambda} = \frac{\ell k}{r^2} , \\ k^r &= \frac{dr}{d\lambda} = \dot{r} = k\{1 - \frac{\ell^2}{r^2}(1 - \frac{2m}{r})\}^{\frac{1}{2}} , \end{aligned} \qquad (4A.1)$$

where λ is an affine parameter and ℓ is the impact parameter defined at ∞ (see Fig. 1). Integrating equation (4A.1) gives us the trajectory of

---

*Note: we use throughout units of c = 1, G = 1.

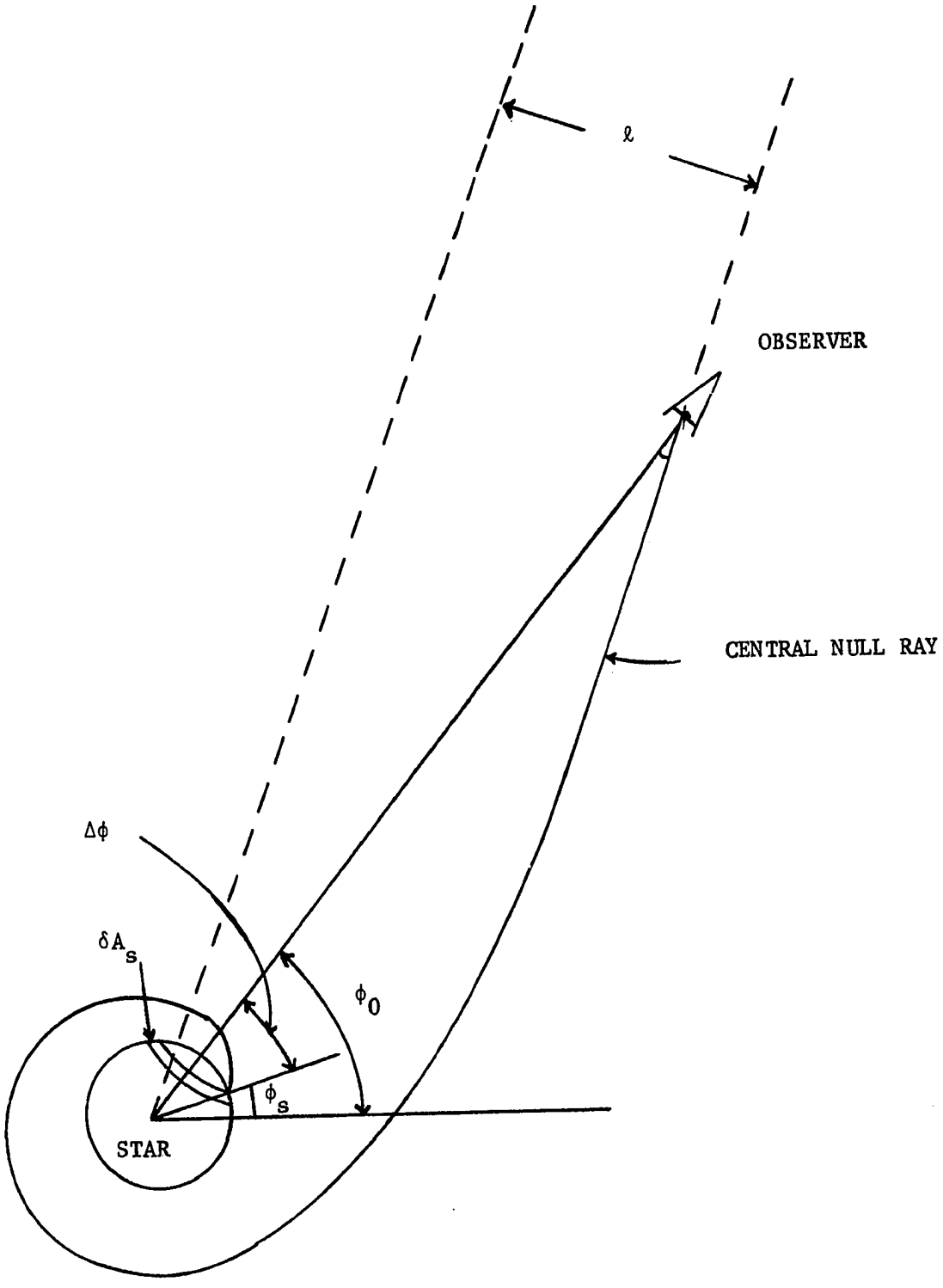

Definition of impact parameter ℓ and $\Delta\phi$.

Fig.1.

light rays

$$t_0 - t_s = \int_R^{r_0} \frac{dr}{(1 - \frac{2m}{r})\{1 - \frac{\ell^2}{r^2}(1 - \frac{2m}{r})\}^{\frac{1}{2}}} , \qquad (4A.2)$$

$$\phi_0 - \phi_s = \int_R^{r_0} \frac{\ell\, dr}{r^2\{1 - \frac{\ell^2}{r^2}(1 - \frac{2m}{r})\}^{\frac{1}{2}}} , \qquad (4A.3)$$

where ϕ_s, t_s and R are the coordinates of the source at emission and r_0, t_0,ϕ_0 are the observer's coordinates.

For the Schwarzschild metric the optical scalar equations (4.1) and (4.2) become[8]

$$\theta' + \theta^2 + |\sigma|^2 = 0 , \qquad (4A.4)$$

$$\sigma' + 2\sigma\theta = \frac{3m\ell^2k^2}{r^5} , \qquad (4A.5)$$

where the phase of the driving term in equation (4A.5) has been fixed such that if we start with the shear real it stays real. If we write θ and σ in terms of the two dimensions of the wave front (see Fig.2)

$$\theta \pm \sigma = \frac{D_\pm'}{D_\pm} , \qquad (4A.6)$$

equations (4A.4)and (4A.5) become

$$D_\pm'' \pm \frac{3m\ell^2k^2}{r^5} D_\pm = 0 . \qquad (4A.7)$$

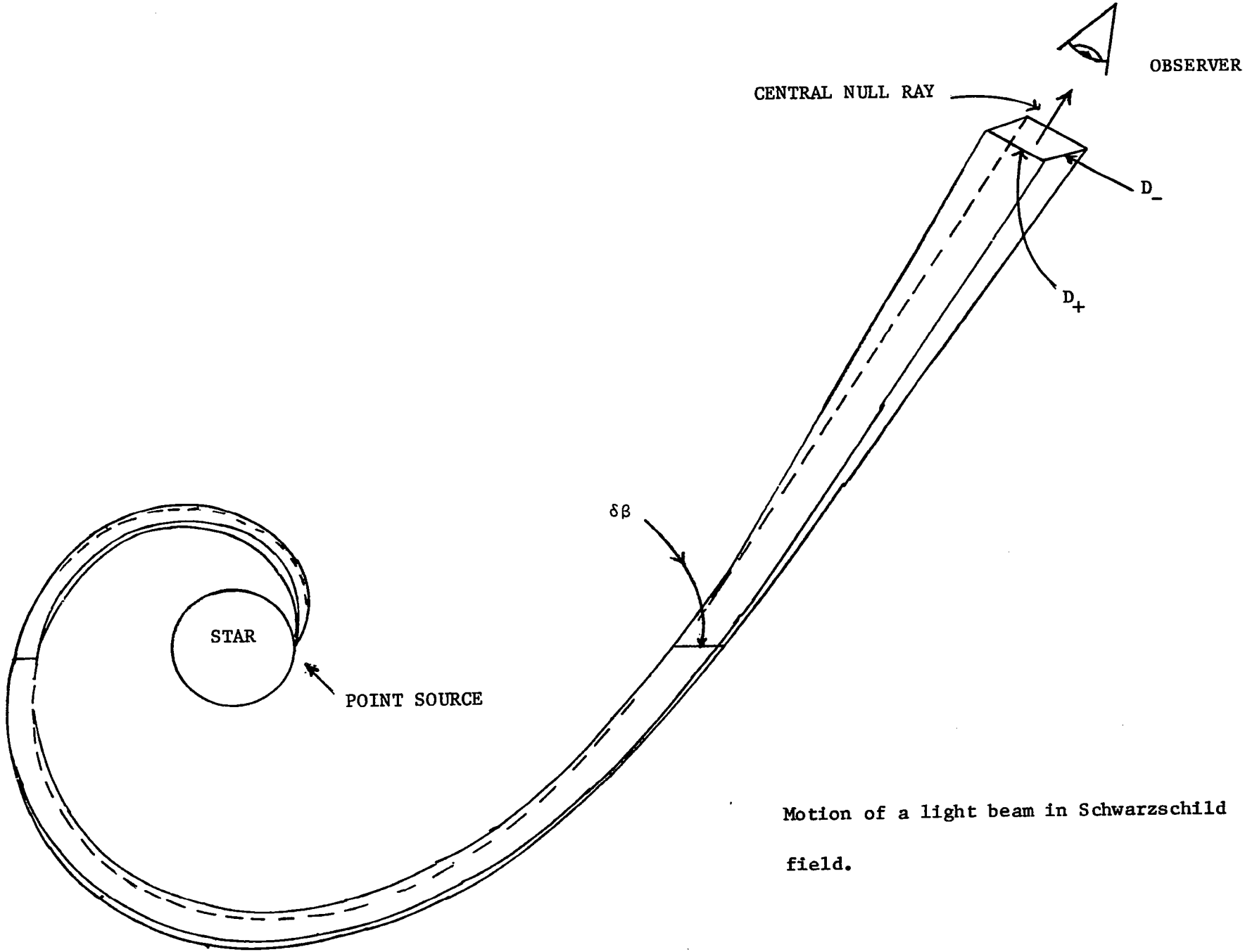

Motion of a light beam in Schwarzschild field.

Fig. 2.

The solution for a point source is given by[8]

$$D_+ = \delta \ell r\{r\}^{\frac{1}{2}} \int_R^{r_0} \frac{dr}{r^2\{r\}^{\frac{1}{2}}\{r\}} \tag{4A.8}$$

$$D_- = \delta \beta r \sin(\phi_o - \phi_s) \ , \tag{4A.9}$$

where $\{r\} = \{1 - \frac{\ell^2}{r^2}(1 - \frac{2m}{r})\}$ and β is the isotropy group parameter defined in Fig. 2. Putting equations (4A.8) and (4A.9) into equation (4A.6) and using equation (4A.1) we get for the shear

$$\sigma = \tfrac{1}{2}\{\frac{\ell^2(1 - \frac{3m}{r})}{r^3\{r\}^{\frac{1}{2}}} + \frac{1}{r^2\{r\} \int_R^{r_0} \frac{dr}{r^2\{r\}^{\frac{1}{2}}\{r\}}} - \frac{\ell k}{r^2}\cot(\phi_0 - \phi_s)\}. \tag{4A.10}$$

We observe from equation (4A.10) that shear in a Schwarzschild gravitational field becomes large only near focus (i.e. $\phi_0 - \phi_s \to n\pi$). There are two cases in nature where the gravitational field is appropriatly described by Schwarzschild and where light focusing may be seen. The first case is that of a stationary dense star (for example a neutron star) and the second a collapsing star as it approaches it's Schwarzschild radius.

(I)

A STATIONARY DENSE STAR

Since the shear becomes large only near focus we will estimate the value of P around the focused region. Frist we estimate the size of P for a single point source and then by assuming that the

surface of the star is covered with point sources we integrate to get the total P. For a point source the shear near focus can be approximated by

$$|\sigma| \simeq \left| \frac{\ell k}{2r_0^2} \cot(\phi_0 - \phi_s) \right|,$$

$$\simeq \left| \frac{\ell k}{2r_0^2 \Delta\Phi} \right| ; \qquad (4A.11)$$

where $\Delta\Phi$ is defined in Fig.1. The P from equation (3.12) becomes

$$P \simeq \left(\frac{\lambda}{r_0 \Delta\Phi}\right) \frac{\ell}{10 r_0} \quad . \qquad (4A.12)$$

Consider the case of a point source on the surface of a dense star (for example a neutron star) where $\ell \simeq 10$km and $r_0 \simeq 10^{14}$km then

$$P \simeq 10^{-14} \left(\frac{\lambda}{r_0 \Delta\Phi}\right) \quad . \qquad (4A.13)$$

If we put a radio antenna with it's center at the focus point equation (4A.13) tells us that the size of the region around focus where $P \simeq 1$ is of the order of $10^{-14}\lambda$. If we take the antenna of the size 100λ we see from equation (4A.13) that the P at the edge of the antenna is of the order of 10^{-16} which implies that the amount of energy of the wave that will become linearly polarized is very small and hence our antenna will not be able to detect it. If we assume the entire star is covered with point sources the average P. is given by

$$\bar{P} = \frac{\Sigma P_n I_n}{\Sigma I_n} \quad , \qquad (4A.14)$$

where P_n are the average values of P near focus for the point sources and I_n are the apparent average intensities near focus of the point sources in the small piece of the surface δA (see Fig. 1). We see from equation (4A.14) that $\bar{P}$ is very small even if light from each point source is focused. The conclusion is that we will not be able to observe any polarization effects due to gravity when we observe a dense star even if the gravitational field is strong enough to focus the light we observe.

(2)

COLLAPSING STAR

The case of a collapsing star is of special interest because in the late stages light rays are focused many times at different points before reaching the observer and we might expect to find large amounts of shear in the multi-focused rays. The luminosity of a collapsing star has been calculated by several authors[6,7,8]. However we will take only the results of I.Dwivedi and R.Kantowski[8] who give the luminosity of a collapsing star as

$$L = \frac{L_0}{4\pi r_0^2} \int_0^{\ell_{max}} \frac{\frac{\ell}{R^2}\left(1 - \frac{2m}{R}\right)(1 - v^2)\, d\ell}{\left(1 - \frac{2m}{r_0}\right)\left(v + \{R\}^{\frac{1}{2}}\right)\left(1 + v\{R\}^{\frac{1}{2}}\right)} \quad , \qquad (4A.15)$$

where L_0 is the total luminosity of the star, v is the collapse velocity,

and ℓmax is given by

$$\ell max = \frac{R}{(1 - \frac{2m}{R})^{\frac{1}{2}}} .$$

The average P is defined by

$$\bar{P} = \frac{\int_{star} P \delta I}{\int_{star} \delta I} . \qquad (4A.16)$$

Using equation (3.12) $\bar{P}$ becomes

$$\bar{P} = \frac{\int_{star} |\sigma| \, \lambda / k^a u_a \, \delta I}{2\pi \int_{star} \delta I} , \qquad (4A.17)$$

where δI is the apparent luminosity of a small piece of the surface and the integration is taken over the surface of the star. Using equation (4A.15) and equation (4A.11) we get for $\bar{P}$

$$\bar{P} = \frac{\lambda \int_0^{\ell max} \frac{\ell^2 k}{R^2}(1 - \frac{2m}{R})^2 (1 - v^2) \cot(\phi_0 - \phi_s) \, d\ell}{(v + \{R\}^{\frac{1}{2}})(1 + v\{R\}^{\frac{1}{2}})} \Bigg/ 4\pi (k^a u_a) r_0^2 \int_0^{\ell max} \frac{\frac{\ell}{R^2}(1 - \frac{2m}{R})^2 (1 - v^2) \, d\ell}{(v + \{R\}^{\frac{1}{2}})(1 + v\{R\}^{\frac{1}{2}})} . \qquad (4A.18)$$

Equation (4A.18) gives us the average value of P for a collapsing star. To find $\bar{P}$ in the late stages we have to evaluate the integrals in the denominator and in the numerator. The integral in the denominator has been calculated before [8].

$$\int_0^{\ell_{max}} \frac{\frac{\ell k}{R^2}(1 - \frac{2m}{R})^2(1 - v^2)\,d\ell}{(v + \{R\}^{\frac{1}{2}})(1 + v\{R\}^{\frac{1}{2}})} \simeq \frac{(1 - v_{3m}^2)}{v_{3m}} \exp(-\frac{t_0 - t_{3m} - r_0}{3\sqrt{3}\,m}),$$

(4A.19)

where v_{3m} is the collapse velocity at R = 3m as seen by an rest observer with coordinates t_0, r_0, and t_{3m} is the time when the star crossed R = 3m. To evaluate the numerator of equation (4A.18) we must find $\cot(\phi_0 - \phi_s)$; $(\phi_0 - \phi_s)$ is given by equation (4A.3). In the late stages we can approximate $(\phi_0 - \phi_s)$ by

$$\phi_0 - \phi_s = \frac{\ell}{\ell_c}(\frac{t_0 - t_{3m} - r_0}{3\sqrt{3}\,m}), \qquad (4A.20)$$

where $\ell_c = 3\sqrt{3}\,m$. Puting equation (4A.20) in equation (4A.18) for $\bar{P}$ we get for the numerator (call it I_L)

$$I_L = \int_0^{\ell_{max}} \frac{\frac{\ell^2}{R^2}(1 - \frac{2m}{R})^2(1 - v^2)\cot\{(\frac{t_0 - t_{3m} - r_0}{3\sqrt{3}\,m})\frac{\ell}{\ell_c}\}d\ell}{(v + \{R\}^{\frac{1}{2}})(1 + v\{R\}^{\frac{1}{2}})}.$$

(4A.21)

Next take a look at the curve which relates R and ℓ (see Fig.3)[8]. According to Fig.3 the value of ℓ remains close to ℓ_c as R goes from R = 3m to 2m. We also observe from equation (4A.21) that the major part of I_L comes from R ≃ 3m and that the part coming from R ≃ 2m is negligible. We therefore approximate I_L by

$$I_L = \frac{\ell_c(1 - v_{3m}^2)}{v_{3m}} \cot(\frac{t_0 - t_{3m} - r_0}{3\sqrt{3}\,m}) \exp(\frac{t_0 - t_{3m} - r_0}{3\sqrt{3}\,m}).$$

(4A.22)

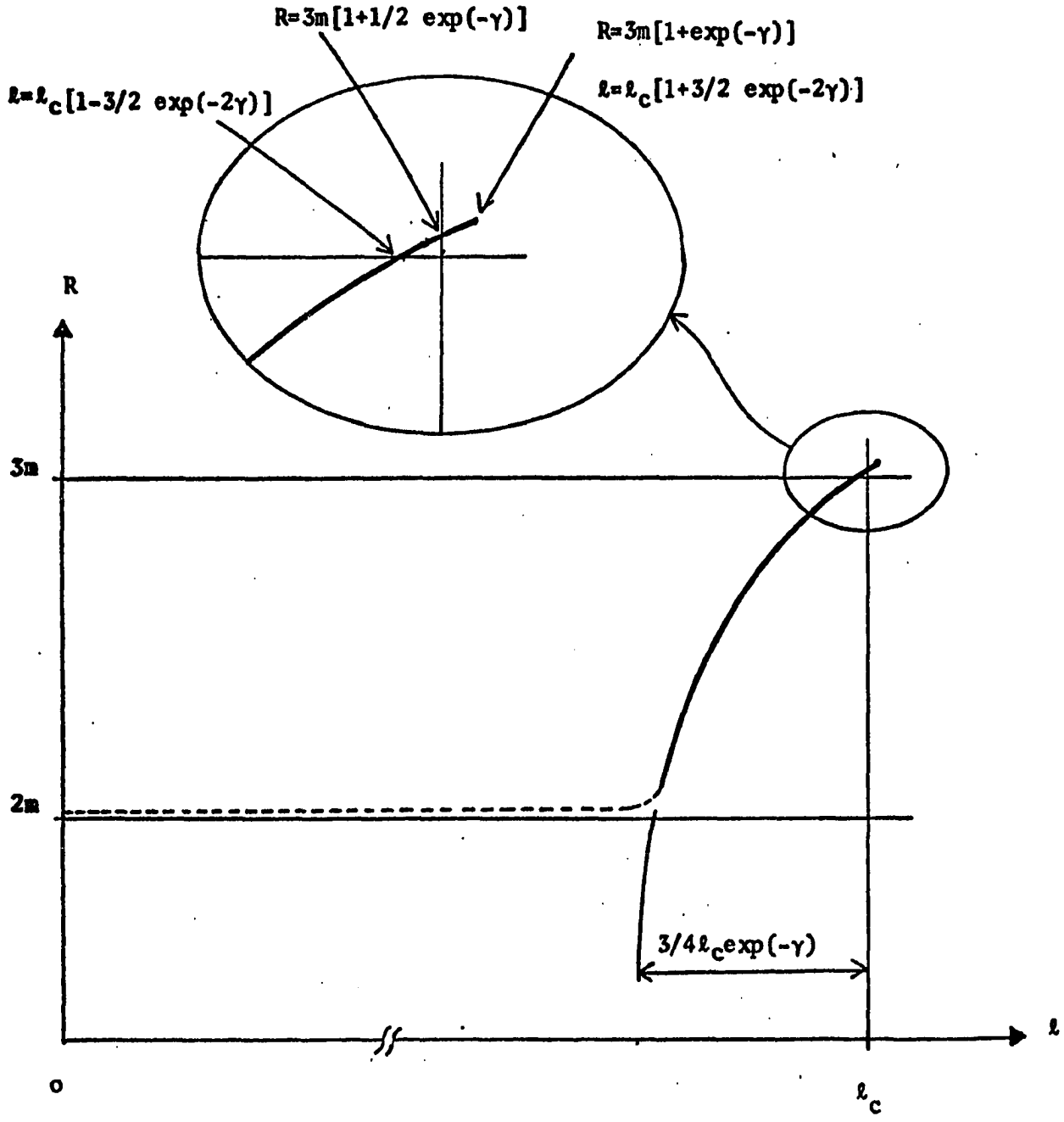

Fig.4.R(ℓ) curve for typical collapsing star given analytically for R≳2m by

$R \sim \frac{3m}{2}\{1+[1-2/3(1-\ell^2/\ell_c^2)\exp\{+\gamma\}]^{1/2}\}/(1-1/2\exp\{-\gamma\})$ where $\gamma \equiv (t_o-r_o-t3m)/3\sqrt{3}m$ and $\ell_c \equiv 3\sqrt{3}m$.

Using equations (4A.18), (4A.19), and (4A.22) we get $\bar{P}$ for a rest observer

$$\bar{P} \simeq \frac{\lambda 3\sqrt{3}\, m}{4\pi r_0^2} \cot\left(\frac{t_0 - t_{3m} - r_o}{3\sqrt{3}\, m}\right) . \qquad (4A.23)$$

To estimate the size of $\bar{P}$ let us put $\frac{\lambda}{r_0^2} \simeq 10^{-33} km^{-1}$ and $m \simeq 1km$ we get for $\bar{P}$

$$\bar{P} \simeq 10^{-33} \cot\left(\frac{t_0 - t_{3m} - r_0}{3\sqrt{3}\, m}\right) . \qquad (4A.24)$$

Equation (4A.24) tells us that when we observe the late stages of a collapsing star $\bar{P} \simeq 1$ for only 10^{-37}sec, much to short a time to measure $\bar{P}$.

B

INHOMOGENIOUS UNIVERSE

In the previous calculations we used a strong gravitational field (short focal length) to focus light but when we did achieve focusing the region of high shear was very small. In this section we use a weak gravitational field (long focal length) and repeat the calculation.

We intend to examine possible polarization effects on the primeval fireball remnants due to inhomogeneities in our universe. We could calculate σ (and hence P) by using equations (4.1) and (4.2), how-

ever we will instead use a simple geometrical procedure. The shear is defined in terms of the two dimensions of the wave front (see Fig.4) by[6]

$$\sigma = \tfrac{1}{2}\left(\frac{D'_+}{D_+} - \frac{D'_-}{D_-}\right) . \qquad (4B.1)$$

We calculate $\frac{D'_+}{D_+}$ and $\frac{D'_-}{D_-}$ as follows: Consider a single light beam coming from a source S (see Fig.4) passing by a inhomogeneity of mass M. Let β, γ be the angles defined in Fig.4 , ℓ be the closest distance of approach and D_s, D_I be the distances of the source and the inhomogeneity at the time rays arrive. Let α be the deflection angle due to an inhomogeneity. D_+ and D_- can be taken as shown in Fig.4 and their calculation is straight forward. We first calculate D_-.

$$D_- = (D_s\gamma - D_I\alpha)\delta , \qquad (4B.2)$$

where the angle δ is defined in Fig.4. γ is related to β by

$$\gamma = \frac{D_I\beta}{D_s - D_I} . \qquad (4B.3)$$

Hence we get for D_-

$$D_- = \left(\frac{D_s D_I}{D_s - D_I} - D_I\alpha\right)\delta . \qquad (4B.4)$$

Using the Einstein bending formula for α

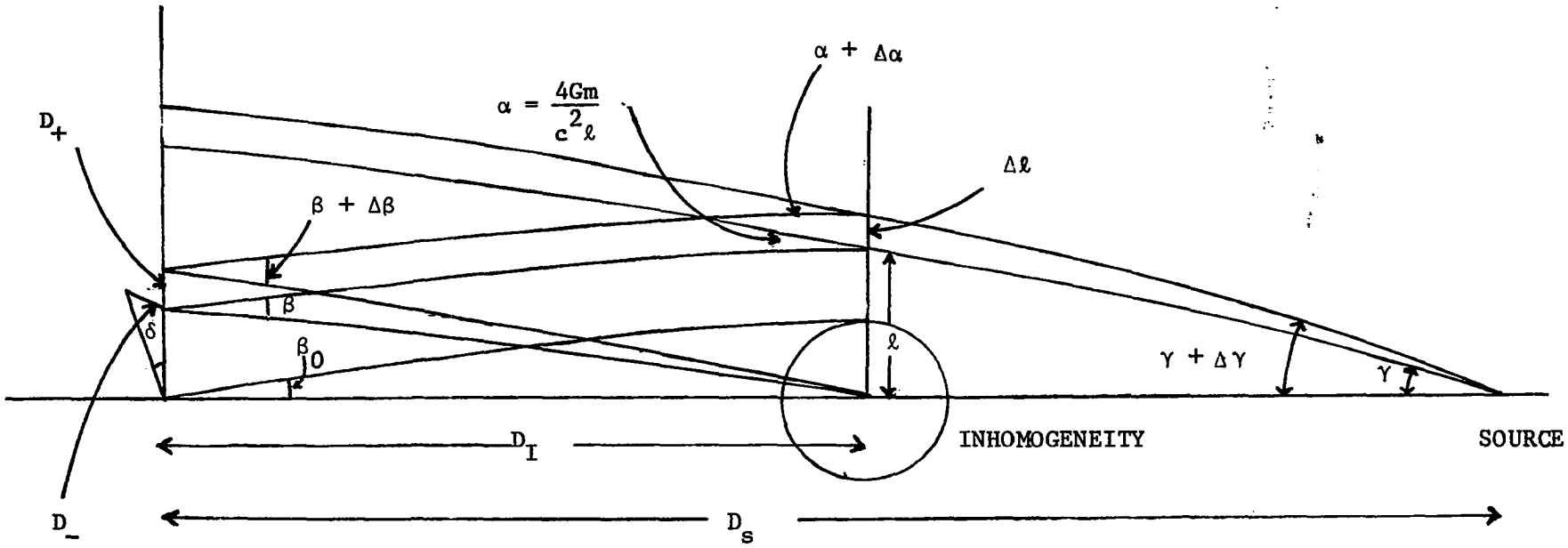

Motion of a light beam in the presence of an inhomogeneity.

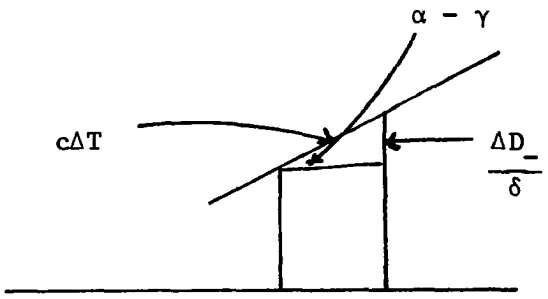

Change in D_-.

Fig. 4.

$$\alpha = \frac{4GM}{c^2 \ell} \quad , \tag{4B.5}$$

we can write D_- as

$$D_- = \frac{D_s D_I}{D_s - D_I}(\beta - \frac{\beta_0^2}{\beta})\delta \quad , \tag{4B.6}$$

where β_0 is the angle at focusing (see Fig.4) and is related to α_0 by

$$\alpha_0 = \frac{D_s \beta_0}{D_s - D_I} \quad . \tag{4B.7}$$

To calculate $\dot{D}_-$ let ΔD_- be the change in D_- for a small change in T (time) then (see Fig.4)

$$\Delta D_- = c\,\Delta T(\alpha - \gamma)\delta \quad , \Rightarrow \quad \dot{D}_- = c(\alpha - \gamma)\delta \; . \tag{4B.8}$$

Using equations (4B.3), (4B.5), (4B.6), (4B.7), and (4B.8) we get for $\frac{\dot{D}_-}{D_-}$

$$\frac{\dot{D}_-}{D_-} = \frac{-(\frac{\beta_0^2}{\beta^2} - \frac{D_I \beta}{D_s})}{D_I\,(1 - \frac{\beta_0^2}{\beta^2})} \; . \tag{4B.9}$$

Similarly we can calculate $\frac{\dot{D}_+}{D_+}$ and it is given by

$$\frac{D_+'}{D_+} = \frac{(\frac{D_s}{D_I} + \frac{\beta_0^2}{\beta^2})(1 + \frac{D_s\beta_0^2}{D_I\beta^2})^{-1}}{D_I} \quad . \tag{4B.10}$$

Therefore from equations (4B.1), (4B.9), and (4B.10)

$$\sigma = \frac{1}{2D_I}\{ (\frac{D_I}{D_s} + \frac{\beta_0^2}{\beta^2})(1 + \frac{D_s\beta_0^2}{D_I\beta^2})^{-1} + (\frac{\beta_0^2}{\beta^2} - \frac{D_I}{D_s})(1 - \frac{\beta_0^2}{\beta^2})^{-1}\} \quad . \tag{4B.11}$$

Near focus the first term is negligible and we can approximate σ by

$$\sigma \simeq \frac{1}{2D_I}(\frac{\beta_0^2}{\beta^2} - \frac{D_I}{D_s})(1 - \frac{\beta_0^2}{\beta^2})^{-1} \quad , \tag{4B.12}$$

and P by

$$P \simeq \frac{\lambda/\pi}{4D_I}(\frac{\beta_0^2}{\beta^2} - \frac{D_I}{D_s})(1 - \frac{\beta_0^2}{\beta^2})^{-1} \quad . \tag{4B.13}$$

To estimate the value of P we put a radio antenna of angular size β_0 at focus at time t = 0 and let it rotate with the earth. Let us also put the inhomogeneity half way between the source and the antenna, we get for P

$$P \simeq \frac{\lambda}{4\pi D_I \omega t} \quad , \tag{4B.14}$$

where ω is the angular velocity of the earth. If we take $\frac{\lambda}{D_I} \simeq 10^{-19}$ and let $\omega \simeq 10^{-5}$ rad/sec , we see from equation (4B.14) that the measurable effect on P lasts only 10^{-15} sec which is clearly too short a period of time to measure P.

CHAPTER 5

CONCLUSION

According to geometrical optics, a plane or circularly polarized wave at the source will remain plane or circularly polarized as it propagates through a curved space time, however, according to the first order correction to geometrical optics the gravitational field does alter the polarization of the wave. The effect is proportional to the shear introduced into the light rays by the gravitational field. If a circularly polarized wave is put in a curved space time, part of the wave becomes linearly polarized due to the gravitational field. The intensity of this part is proportional to the shear (σ).

We tried several applications the first of which was to light coming from a dense star. The conclusion was that due to the size of our antenna we are not able to detect any polarization changes, even when the light we observe is focused by the gravitational field of the star. Our next application was to light coming from the late stages of a collapsing star. Here the measurable effect lasted for such a short period of time that it was not measurable. The final case we tried was that of black body radiation passing near a inhomogeneity before reaching an antenna fixed on the earth. In this case the measurable effect lasted only 10^{-15}second and was therefore not detectable. Before closing we should mention a hypothetical case where the effect is measurable.

If an observer who is close to a neutron star ($r_0 \simeq 6R$) observes radiation coming from behind the star, he will be able to detect an effect on polarization. If we put an antenna of the size 100λ with its center at focus then P at the edge of antenna is down only to 10^{-3} which is detectable.

Although the first order corrections to geometrical optics are of theoratical interest their observational consequences are negligible. Our calculations were done only for polarization effects, however, other first order effects (interference. etc.) should be similarly small.

APPENDIX 1

PARALLEL TRANSPORTED NULL TETRADS AND SELF DUAL BIVECTORS

When one is working with null geodesics (light rays) a convienent way to handle the radiation fields that flow along these null directions is by the use of parallel transported null tetrads. The construction of a null tetrad everywhere along a null congruence is done by first building the null tetrad at some point on each geodesics of the congruence and then parallel transporting it along those null geodesics (see Fig.5).

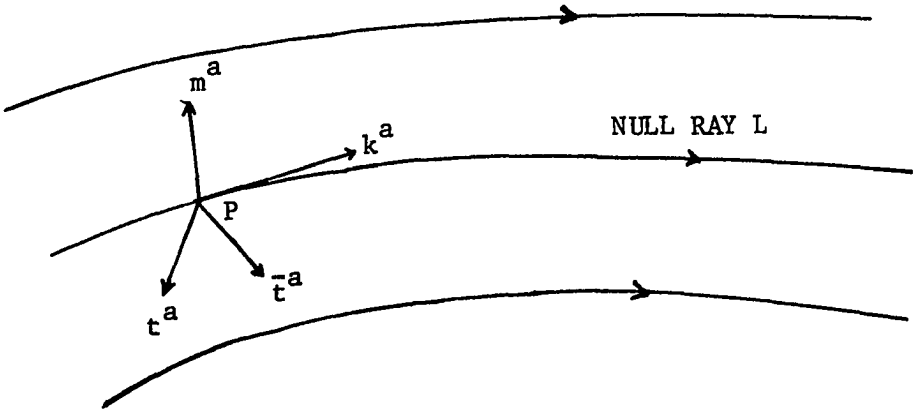

Figure 5.

Let k^a be the null tangent vector at point P on some null ray L. Let us construct two null vectors m^a and t^a at point P satisfying

$$k^a m_a = \bar{t}^a t_a = 1,$$

$$k^a k_a = k^a t_a = m^a m_a = t^a t_a = m^a t_a = 0 \ , \qquad \text{(A1.1)}$$

where m^a is a real null vactor and t^a is complex.

The complex vector t^a has real and imaginary parts

$$t^a = \frac{1}{\sqrt{2}} (p^a + iq^a) \ , \qquad \text{(A1.2)}$$

where p^a and q^a are real orthogonal space like unite vectors. From equation (A1.1) it follows that

$$\begin{aligned} p^a p_a &= q^a q_a = 1 \ , \\ p^a q_a &= 0 \ . \end{aligned} \qquad \text{(A1.3)}$$

Now we parallel transport the null tetrad defined at P along the null ray L

$$m^a{}_{;b} k^b = t^a{}_{;b} k^b = 0 \ , \qquad \text{(A1.4)}$$

k^a is the tangent vector to a geodesic and is automatically parallel transported. Since parallel transport preserves lengths and angles, m^a , t^a ,and k^a continue to satisfy the orthonormality relations (A1.1).

The null tetrad defined above forms a basis in terms of which we can decompose tensors of any order, for example the metric

tensor can be expressed as

$$g^{ab} = 2k^{(a}m^{b)} + 2\bar{t}^{(a}t^{b)} \quad . \tag{A1.5}$$

The self dual bivector is an another interesting tensor that we want to express in terms of these null vectors. A self dual bivector, a necessary tool for doing geometrical optics, is a two index antisymmetric tensor having the following property

$$F^{*}_{ab} = -iF_{ab} \quad , \tag{A1.6}$$

where F^{*}_{ab} denotes the dual of F_{ab} and is defined by

$$F^{*}_{ab} = \tfrac{1}{2}\sqrt{-g}\,\epsilon_{abcd}F^{cd} \quad , \tag{A1.7}$$

where ϵ_{abcd} is the Levi-Chavita alternating symbol and g is the determinent of metric g_{ab}.

There are only three independent self dual bivector and they can be taken as

$$V^{ab} = 2k^{[a}\bar{t}^{b]} \equiv k^{a}\bar{t}^{b} - k^{b}\bar{t}^{a}$$

$$U^{ab} = 2m^{[a}t^{b]} \equiv m^{a}t^{b} - m^{b}t^{a} \tag{A1.8}$$

$$M^{ab} = 2k^{[a}m^{b]} + 2\bar{t}^{[a}t^{b]} \equiv k^{a}m^{b} - k^{b}m^{a} + \bar{t}^{a}t^{b} - \bar{t}^{b}t^{a} .$$

Any other self dual bivector must be a linear combination of the three self dual bivectors defined above. For example if G^{ab} is a self dual bivector then

$$G^{ab} = AV^{ab} + BU^{ab} + CM^{ab} , \qquad (A1.9)$$

where A, B and C are complex scalars.

APPENDIX 2

MAXWELL'S EQUATIONS

The purpose of this appendix is to varify the statement that of the four Maxwell's equations only (2.18), (2.20),and (2.21) are needed for doing geometrical optics.

We can rewrite equation (2.10) as

$$G^{ab}_{\pm}{}_{;b} \pm \frac{i}{\varepsilon} G^{ab}_{\pm} k_b \equiv E_{\pm} k^a + F_{\pm} m^a + G_{\pm} t^a + H_{\pm} \bar{t}^a = 0, \quad \text{(A2.1)}$$

where

$$E_{\pm} \equiv A_{\pm},_{\bar{t}} - A_{\pm}\bar{\xi} + C_{\pm},_{m} - B_{\pm}\delta + 2C_{\pm}\Theta' \pm \frac{i}{\varepsilon} C_{\pm} = 0, \quad \text{(A2.2)}$$

$$F_{\pm} \equiv \overset{\bullet}{C}_{\pm} + 2C_{\pm}\Theta - B_{\pm},_{\bar{t}} + B_{\pm}(\bar{\alpha} + \xi) = 0 , \quad \text{(A2.3)}$$

$$G_{\pm} \equiv - B_{\pm},_{m} - C_{\pm},_{\bar{t}} + A_{\pm}\sigma - B_{\pm}(\quad \Theta' + Q - \gamma) + 2C_{\pm}\alpha$$

$$\mp \frac{i}{\varepsilon} B_{\pm} = 0 , \quad \text{(A2.4)}$$

$$H_{\pm} \equiv \overset{\bullet}{A}_{\pm} + A_{\pm}\Theta - C_{\pm},_{\bar{t}} - B_{\pm}\bar{\sigma}' = 0, \quad \text{(A2.5)}$$

are Maxwell's four (complex) equations. However only three are independ-

ent due to the fact that the divergence of equation (A2.1) vanishes. To find the dependent equation we take the divergence of equation (A2.1)

$$(G_{\pm}^{ab}{}_{;b} \pm \frac{i}{\varepsilon} G_{\pm}^{ab} k_b)_{;a} \equiv (E_{\pm} k^a + F_{\pm} m^a + G_{\pm} t^a + H_{\pm} \bar{t}^a)_{;a}. \quad (A2.6)$$

Since G^{ab} is a antisymmetric tensor and $k_{a;b}$ is symmetric, the left hand side of equation (A2.6) expands to

$$(G_{\pm}^{ab}{}_{;b} \pm \frac{i}{\varepsilon} G_{\pm}^{ab} k_b)_{;a} \equiv G_{\pm}^{ab}{}_{;b;a} \pm \frac{i}{\varepsilon} (G_{\pm}^{ab}{}_{;a} k_b + k_{b;a} G_{\pm}^{ab}),$$

$$\equiv \mp \frac{i}{\varepsilon} F_{\pm} . \quad (A2.7)$$

The right hand side becomes

$$(E_{\pm} k^a + F_{\pm} m^a + G_{\pm} t^a + H_{\pm} \bar{t}^a)_{;a} \equiv \dot{E}_{\pm} + 2E_{\pm}\Theta + F_{\pm,m} + F_{\pm} m^b{}_{;b}$$

$$+ G_{\pm,t} + G_{\pm} t^b{}_{;b} + H_{\pm,\bar{t}} + H_{\pm} \bar{t}^b{}_{;b} . \quad (A2.8)$$

Puting equation (A2.7) and equation (A2.8) in equation (A2.6) we get

$$\mp \frac{i}{\varepsilon} F_{\pm} \equiv \dot{E}_{\pm} + E_{\pm} 2\Theta + F_{\pm,m} + F_{\pm} m^b{}_{;b} + G_{\pm,t} + G_{\pm} t^b{}_{;b}$$

$$+ H_{\pm,\bar{t}} + H_{\pm} \bar{t}^b{}_{;b} . \quad (A2.9)$$

If equations (A2.2), (A2.4), and (A2.5) are satisfied then equation (A2.-9) implies that

$$F_{\pm,m} + F_{\pm}{}^{b}{}_{;b} \pm \frac{i}{\epsilon} F_{\pm} \equiv 0 \ . \qquad \text{(A2.10)}$$

This equation has only one solution analytic at $\epsilon = 0$ and that is $F_{\pm} = 0$. If we insert that $F_{\pm}(\epsilon = 0) = 0$ for the geometrical optics limit then $F_{\pm} = 0$ for all ϵ.

APPENDIX 3

FIRST ORDER CORRECTIONS TO GEOMETRICAL OPTICS

The solution of Maxwell's equation to first order in λ for a single point source located in a Schwarzschild space time will be presented here. The procedure of finding the solution will be the same as given in chapter 2.

For a point source situated in a Schwarzschild space time the vector k^a which is normal to the null hypersurface and tangent to the out going null geodesics is given by [8]

$$\begin{aligned}
\frac{dt}{d\lambda} &= k^t = \frac{k}{(1 - \frac{2m}{r})} \quad , \\
\frac{dr}{d\lambda} &= k^r = k\{1 - \frac{\ell^2}{r^2}(1 - \frac{2m}{r})\}^{\frac{1}{2}} = k\{r\}^{\frac{1}{2}} \quad , \\
\frac{d\phi}{d\lambda} &= k^\phi = \frac{\ell k \cos\beta}{r^2 \sin^2\theta} \quad , \\
\frac{d\theta}{d\lambda} &= k^\theta = \frac{\ell k \sin\beta \cos\phi}{r^2} \quad ,
\end{aligned} \tag{A3.1}$$

where λ is the affine parameter of the central null geodesic, ℓ is the impact parameter, and β is the isotropy parameter. The parameters ℓ and β label the different geodesics of the null congruence but are constant

along each nullgeodesic . The null vectors m^a and t^a of the null tetrad can be calculated from equation (A1.1) and the condition that they be parallel transported along the null geodesics. The vector m^a is given by

$$
\begin{aligned}
m^t &= \frac{k}{2r^2(1-\frac{2m}{r})}\left[\frac{r^2}{k^2}+\lambda^2-\frac{\lambda r}{k}\{r\}^{\frac{1}{2}}\right] , \\
m^r &= \frac{k^3}{2r^2}\left[\frac{r^2}{k^2}+\lambda^2\{r\}^{\frac{1}{2}}-\frac{2\lambda r}{k}\right] , \\
m^\theta &= \frac{\cos\phi\,\sin\beta}{2r}\left[\frac{\lambda^2k^2}{r^2}-1\right] , \\
m^\phi &= \frac{\cos\beta}{2r\sin^2\theta}\left[\frac{\lambda^2k^2}{r^2}-1\right] ,
\end{aligned}
\qquad \text{(A3.2)}
$$

and t^a by

$$
\begin{aligned}
t^t &= \frac{k^2}{\sqrt{2}r(1-\frac{2m}{r})}\left(\frac{r}{k}-\lambda\right) , \\
t^r &= \frac{k^2}{\sqrt{2}r}\left[\frac{r}{k}\{r\}^{\frac{1}{2}}-\lambda\right] , \\
t^\theta &= -\frac{1}{\sqrt{2}r}\left(\frac{\lambda k\cos\phi\,\sin\beta}{r}-\frac{i\cos\beta}{\sin\theta}\right) , \\
t^\phi &= -\frac{1}{\sqrt{2}r\sin\theta}\left(\frac{\lambda k\cos\beta}{r\sin\theta}+i\cos\phi\,\sin\beta\right) .
\end{aligned}
\qquad \text{(A3.3)}
$$

Some of the scalars associated with the null tetrad needed later are given by

$$
\theta \pm \sigma = \frac{D'_\pm}{D_\pm} , \qquad \text{(A3.4)}
$$

$$\alpha = \frac{1}{\sqrt{2}\ell}\left\{\frac{\lambda D_+'}{D_+} - 1 - \frac{1}{D_+}\right\} , \qquad \text{(A3.5)}$$

$$\xi = \frac{1}{\sqrt{2}\ell}\left\{\frac{\lambda D_-'}{D_-} - 1\right\} , \qquad \text{(A3.6)}$$

$$\gamma = \frac{1}{\ell^2}\left[\frac{\lambda^2 D_+'}{D_+} + \frac{r\{r\}^{\frac{1}{2}}}{k} - \lambda + \frac{r\{r\}^{\frac{1}{2}}}{f} + \frac{2\lambda}{D_+}\right] , \qquad \text{(A3.7)}$$

$$\Theta' = \tfrac{1}{2}\left[\frac{D_{-,m}}{D_-} - \frac{D_+'}{\ell^2 D_+}\left(\lambda^2 + \frac{r^2}{k^2}\right) + \frac{\lambda}{\ell^2} - \frac{r\{r\}}{\ell^2 k}\right] , \qquad \text{(A3.8)}$$

where $D_- = \frac{r\sin\Theta\,\sin\phi}{\cos\beta}$, $D_+ = r\{r\}^{\frac{1}{2}} f$, and $f = \int \frac{d\lambda}{r^2\{r\}}$.

Before proceeding with Maxwell's equation , let us derive certain relations, the usefulness of which will become clear later. From the definition of the Riemann tensor

$$2k_{a;[b;c]} = k^d R_{dabc} ,$$

$$2t_{a;[b;c]} = t^d R_{dabc} ,$$

we can drive the following relations

$$(\xi,_{\bar{t}} + \bar{\xi},_t) - 2\Theta\Theta' + (\bar{\sigma}\sigma' + \sigma\bar{\sigma}') - 2\xi\bar{\xi} = \bar{t}^d R_{dabc} t^a t^b \bar{t}^c ,$$

$$\Theta' + \bar{\sigma}\sigma' + \Theta\Theta' = m^d R_{dabc} \bar{t}^a t^b k^c .$$

Using the fact that for the Schwarzschild metric $R_{ab} = 0$ and combining the above two equations we get

$$2\xi_{,t} + 4\sigma\sigma' = 4m^{d}R_{dabc}\bar{t}^{a}t^{b}k^{c} - 2\theta' + 2\xi^{2} \quad . \tag{A3.9}$$

To derive the next useful relation we consider

$$R' = \frac{D_{+,a}\bar{t}^{a}}{D_{+}^{2}} \quad . \tag{A3.10}$$

From equation (A3.10) it follows that

$$\left(\frac{D_{+,\bar{t}}}{D_{+}}\right)_{,t} - \frac{D_{+,\bar{t}}D_{+,t}}{D_{+}^{2}} - \frac{D_{+,\bar{t}}}{D_{+}}\bar{\alpha} = -(R_{,t}D_{+})'.$$

For the Schwarschild metric this becomes

$$(\alpha_{,t} - q_{,t} - q\alpha + q^{2}) = (R_{,t}D_{+})' \quad , \tag{A3.11}$$

where we have put

$$\frac{D_{+,\bar{t}}}{D_{+}} = -\alpha + q \quad . \tag{A3.12}$$

R from equation (A3.10) turns out to be

$$R = \left[D_{+}\left(\frac{1}{f}\right)_{,t} + \frac{\lambda^{2}}{\sqrt{2}\ell D_{+}} - \frac{r\lambda\{r\}^{\frac{1}{2}}}{\sqrt{2}\ell D_{+}}\right] . \tag{A3.13}$$

Some other useful relations for Schwarzschild space time are given below

$$\xi = -\frac{D_-'t}{D_-} \quad , \tag{A3.14}$$

$$\Rightarrow \frac{D_-'t}{D_-^2} = \left[\frac{\lambda'}{\sqrt{2}\ell D_-}\right] \quad , \tag{A3.15}$$

and

$$\alpha^2 - 4m^d R_{dabc}\bar{t}^a t^b k^c - 3\xi^2 = \left[\gamma + \frac{3\lambda'}{\sqrt{2}\ell}\xi\right] \quad . \tag{A3.16}$$

Now let us go to Maxwell's equations. We first calculate $A_\pm(0)$ by integrating equation (2.17)

$$A_\pm'(0) + A_\pm(0)\Theta = 0 \quad .$$

Using equation (A3.4) we have

$$A_\pm(0) = \frac{P_\pm(\ell,\beta)}{\sqrt{D_+ D_-}} \quad , \tag{A3.17}$$

where $P_\pm(\ell,\beta)$ are constants of integration and are functions of ℓ and β. Knowing $A_\pm(0)$ and the scalers the calculation of $B_\pm(1)$ and $C_\pm(1)$ is straight forward from equations (2.22) and (2.23)

$$B_\pm(1) = \mp iA_\pm(0)\sigma = \mp \frac{iP_\pm(\ell,\beta)}{2\sqrt{D_+ D_-}} \left(\frac{D_+'}{D_+} - \frac{D_-'}{D_-}\right) \quad , \tag{A3.18}$$

$$C_{\pm}(1) = \pm \frac{iP_{\pm}(\ell,\beta)}{\sqrt{D_+ D_-}} \{\frac{P_{\pm,\bar{t}}}{P_{\pm}} - \tfrac{1}{2}(\frac{D_{+,\bar{t}}}{D_+} + \bar{\xi})\} \ . \qquad (A3.19)$$

In order to evaluate $A_{\pm}(1)$ we must integrate equation (2.25) which is given by

$$f_{\pm} = \{\frac{A_{\pm}(0),_{\bar{t}},_t}{A_{\pm}(0)} - \frac{A_{\pm}(0),_t}{A_{\pm}(0)} \bar{\xi} - \bar{\xi},_t - \sigma\bar{\sigma}'\} \ .$$

Using equation (A3.17) and expanding the terms we get

$$f_{\pm}' = I_{\pm} + L_{\pm} \ , \qquad (A3.20)$$

where

$$I_{\pm} = \frac{P_{\pm,\bar{t}},_t}{P_{\pm}} + \frac{P_{\pm,\bar{t}}}{2P_{\pm}}(\alpha - q - \xi) + \frac{P_{\pm},_t}{2P_{\pm}}(\alpha + \xi - q) \ , \qquad (A3.21)$$

$$L_{\pm} = \tfrac{1}{4}(2\alpha,_t - 2q,_t - 2q\alpha + \alpha^2 + q^2 - 2\xi,_t - \xi^2 - 4\sigma\bar{\sigma}') . \qquad (A3.22)$$

Integrating equation (A3.20) we get

$$f_{\pm} = \int I_{\pm} d\lambda + \int L_{\pm} d\lambda + \text{constant} \ . \qquad (A3.23)$$

Using equations (A3.9), (A3.11), and (A3.16) we can write $L_{\pm}$ as

$$L_{\pm} = \tfrac{1}{2}\Theta' + (\gamma + \frac{3\lambda\xi}{\sqrt{2}\ell}) - q^2 - \{R,_t D_+\} \ ,$$

hence

$$\int L_{\pm} d\lambda = \tfrac{1}{4}(- 2R,_t D_+ + 2\Theta' + \gamma - \int q^2 d\lambda + \frac{3\lambda\xi}{\sqrt{2}\ell}) \ . \qquad (A3.24)$$

To evaluate $\int q^2 d\lambda$ we first calculate q from equation (A3.12) for the Schwarzschild metric

$$q = \frac{1}{\sqrt{2}k}\left[\frac{\ell^2(1 - 2m/r)}{r^2\{r\}} - \frac{K_+'}{D_+} + \frac{3\int K_+'' D_+/r\,dr}{D_+}\right], \qquad \text{(A3.25)}$$

where

$$K_+ = \int \frac{\ell(1 - 2m/r)\,d\lambda}{r^2\{r\}^2} \quad . \qquad \text{(A3.26)}$$

q in equation (A3.25) can be squared and integrated to get

$$\int q^2 d\lambda = \frac{1}{2k^2}\left[\int \frac{\ell^2(1 - 3m/r)\,d\lambda}{r^4\{r\}^2} - \frac{K_+'^2 r\{r\}^{\frac{1}{2}}}{D_+} + \frac{3PK_+' r^2\{r\}}{D_+^2}\right.$$

$$\left. - \frac{3P^2 r^3\{r\}^{\frac{3}{2}}}{D_+^3}\right], \qquad \text{(A3.27)}$$

where

$$P = \int \frac{\ell^2(1 - 2m/r)\,d\lambda}{r^4\{r\}^2} \quad . \qquad \text{(A2.28)}$$

Putting equation(A3.27) in equation (A3.24) completes the integration of $L_\pm$.

To integrate $I_\pm$ we make a coordinate transformation from (r,θ,ϕ,t) to (λ,β,ℓ,t_s). In the new coordinates $I_\pm$ is written as

$$I_\pm = \frac{1}{2P_\pm D_+^2}\left(\frac{d^2P_\pm}{d\ell^2}\right) + \frac{1}{2P_\pm D_-^2}\left(\frac{d^2P_\pm}{d\beta^2}\right) + \frac{\sqrt{2}D_+',_t}{P_\pm D_+^2}\left(\frac{dP_\pm}{d\ell}\right)$$

$$+ \frac{\sqrt{2}iD_-',_t}{P_\pm D_-^2}\left(\frac{dP_\pm}{d\beta}\right) \quad . \qquad \text{(A3.29)}$$

Using equation (A3.10) and equation (A3.15) we can integrate $I_{\pm}$ as

$$\int I_{\pm} = -\frac{r\{r\}^{\frac{1}{2}}}{P_{\pm}k^2D_{+}}\left(\frac{d^2P_{\pm}}{d\ell^2}\right) - \frac{\cot\phi}{P_{\pm}\ell k\sin\beta}\left(\frac{d^2P_{\pm}}{d\beta^2}\right) + \frac{\sqrt{2}R}{P_{\pm}}\left(\frac{dP_{\pm}}{d\ell}\right)$$

$$+ \frac{\sqrt{2}i\lambda}{\ell P_{\pm}D_{-}}\left(\frac{dP_{\pm}}{d\beta}\right) \quad . \qquad \text{(A3.30)}$$

When this integral along with $\int L_{\pm}d\lambda$ is placed in equation (A3.23) we have completely determined the first order corrections to geometrical optics in a Schwarzschild space time.

BIBLIOGRAPHY

1. A. Summerfeld and J. Runge. Ann. I. Physik 35, 289 (1911).

2. M. Born and E. Wolf. "Principles of Optics", Pergamon Press, London (1959).

3. J. Ehlers, Z. Naturforschg. 229,1328 (1967).

4. P. G. Bergmann. "Introduction to the Theory of Relativity", New York, Prentice Hall, Inc., (1950).

5. J. B. Marion. "Classical Electromagnetic Radiation", Academic Press, New York (1965).

6. R. K. Sachs. Proc. Roy. Soc. (London) 264, 309 (1961).

7. M. S. Podurets. Astr. Zh. 41, 1090 (1964), [English trans. Soviet Ast. Aj, 8, 868 (1951)].

8. I. H. Dwivedi and R. Kantowsli, Lecture Notes in Physics (Berlin Springer-Verlag) in press.

9. L. Ames and K. S. Thorne. Ap. J. 151, 659 (1968).