INFORMATION TO USERS

This was produced from a copy of a document sent to us for microfilming. While the most advanced technological means to photograph and reproduce this document have been used, the quality is heavily dependent upon the quality of the material submitted.

The following explanation of techniques is provided to help you understand markings or notations which may appear on this reproduction.

1. The sign or "target" for pages apparently lacking from the document photographed is "Missing Page(s)". If it was possible to obtain the missing page(s) or section, they are spliced into the film along with adjacent pages. This may have necessitated cutting through an image and duplicating adjacent pages to assure you of complete continuity.

2. When an image on the film is obliterated with a round black mark it is an indication that the film inspector noticed either blurred copy because of movement during exposure, or duplicate copy. Unless we meant to delete copyrighted materials that should not have been filmed, you will find a good image of the page in the adjacent frame.

3. When a map, drawing or chart, etc., is part of the material being photographed the photographer has followed a definite method in "sectioning" the material. It is customary to begin filming at the upper left hand corner of a large sheet and to continue from left to right in equal sections with small overlaps. If necessary, sectioning is continued again–beginning below the first row and continuing on until complete.

4. For any illustrations that cannot be reproduced satisfactorily by xerography, photographic prints can be purchased at additional cost and tipped into your xerographic copy. Requests can be made to our Dissertations Customer Services Department.

5. Some pages in any document may have indistinct print. In all cases we have filmed the best available copy.

University
Microfilms
International

300 N. ZEEB ROAD, ANN ARBOR, MI 48106
18 BEDFORD ROW, LONDON WC1R 4EJ, ENGLAND

Downloaded from SHAREOK. Persistent Handle URL: https://hdl.handle.net/11244/4618

7926004

BADI, MAHMOUD MUHYADIN
APPLICATION OF INPUT-OUTPUT ANALYSIS TO PLANNING REFINERY OPERATIONS: A THEORETICAL AND EMPIRICAL STUDY.

THE UNIVERSITY OF OKLAHOMA, PH.D., 1979

University Microfilms International 300 N. ZEEB ROAD, ANN ARBOR, MI 48106

THE UNIVERSITY OF OKLAHOMA

GRADUATE COLLEGE

APPLICATION OF INPUT-OUTPUT ANALYSIS TO PLANNING REFINERY OPERATIONS: A THEORETICAL AND EMPIRICAL STUDY

A DISSERTATION

SUBMITTED TO THE GRADUATE FACULTY

in partial fulfillment of the requirements for the degree of

DOCTOR OF PHILOSOPHY

BY

MAHMOUD MUHYADIN BADI

Norman, Oklahoma

1979

APPLICATION OF INPUT-OUTPUT ANALYSIS

TO PLANNING REFINERY OPERATIONS:

A THEORETICAL AND EMPIRICAL STUDY

APPROVED BY

William F. Bentz

William C McGrew

John P. Klingstedt

James F. Horrell

Edward F. Stoffard

DISSERTATION COMMITTEE

In the Name of God, the Merciful, the Beneficent

To my parents who have sacrificed for many years without complaining. To them who have raised me in an Islamic way and taught me to love, give, share, and forgive but fear no one but Allah, the Creator, the Sustainer, the Supreme. To both of them who have taught me precious lessons that can never be learned in school. To them who have waited patiently for so long to see the day when my goals are achieved.

To the memory of my late father, Muhyadin Mahmoud Badi, who left this world before witnessing the fruit of his struggle. And to my respectful mother, Zainab Ahmed Al-Sallabi, I dedicate this humble work.

Mahmoud M. Badi

ACKNOWLEDGEMENTS

In recognizing the efforts of those who contributed to the completion of this dissertation, I extend my gratitude to all of them. I am grateful not only to those mentioned here but also to other people who are not.

I am indebted and thankful to Messrs. Abdussalam Zagaar and Doukali Megharief for their remarkable efforts in collecting data for this dissertation. Without their help, this study could not have been undertaken.

Special recognition should be given to Professor W. F. Bentz, the Chairman of my dissertation committee, whose knowledge and experience has guided me from the beginning to the final phases of this study. I also extend my sincere thanks to other members of my dissertation committee: Professors W. C. McGraw, J. P. Klingstedt, J. F. Horrell, and E. F. Stafford. Their generous contributions to the subject matter and their constructive comments were appreciated and with their patient assistance and considerable understanding this study was completed.

I am personally indebted to the people of my country, Libya, and to the College of Economics and Commerce of the University of Garyounis at Benghazi, Libya, for giving me the chance to continue my graduate studies and for providing the

necessary funds.

Mrs. V. A. Ospovat deserves more than the cordial expression of thanks for her excellent and professional typing. I appreciate her sincere efforts and devotion which enabled me to comply with the deadline for submitting this dissertation.

Finally, my family deserves more thanks than can ever be expressed here. My mother Zainab, my wife Naima, and my daughters Nadah, Amel, and Sarah have always provided me with the moral support which I needed. Their cooperation, patience, and understanding will never be forgotten. I am thankful to all of them for their continuous support and encouragement.

Mahmoud M. Badi

Norman, Oklahoma

June 1979

TABLE OF CONTENTS

	Page
ACKNOWLEDGEMENTS	iii
LIST OF TABLES	vii
LIST OF FIGURES	ix
Chapter	
I. INTRODUCTION	1
Purpose of the Study	1
Statement of the Problem	2
The Need for the Study	3
Methodology	6
Organization of the Study	15
II. THE INPUT-OUTPUT MODEL	19
The Model Described	20
Input-Output Analysis in Accounting Literature	24
Extending the Micro Input-Output Model into a Linear Program	35
III. REFINERY OPERATIONS DESCRIBED	41
Oil Refining Process	41
Accounting Concepts Underlying Petroleum Refining	49
Financial Characteristics of Refining Operations	51
The Future of Planning and Control in Refinery Operations	54
IV. LINEAR PROGRAMMING APPLICATIONS IN REFINING OPERATIONS	63
The Crude Oil Allocation Problem	64
The Blending Problem	67
The Running Plan Problem	73
The Distribution Transportation Problem	75
Other Applications of Linear Programming	78
Applications of Input-Output Analysis to Refinery Operations	79

Chapter		Page
V.	FORMULATION OF THE INPUT-OUTPUT MODEL	83
	The Refining System Being Modeled	83
	Estimating Technological Coefficients	89
	Input-Output Relationships of the Refinery	94
	Testing the Model	96
	Application of the Model to Planning and Budgeting	100
	Planning Production Requirements for the Refinery	103
VI.	ANALYSIS OF THE RESULTS AND MODEL VALIDATION	113
	Validating the Model	113
	Model Validity	114
	Data Validity	116
	Logical Validity	117
	Predictive Validity	118
	Application of Statistical Techniques	119
	Evaluation of the Results	122
VII.	SUMMARY, CONCLUSIONS, AND RECOMMENDATIONS	132
	Scope of the Study	133
	Summary	133
	Conclusions	139
	Recommendations	141
BIBLIOGRAPHY		143
APPENDIX		150

LIST OF TABLES

Table		Page
II-1	Input-Output Relations for an Economy Consisting of m Industries	21
III-1	U.S. Average Percentage Yield of Petroleum Products per Barrel of Crude Oil 1920-1968	48
V-1	Production Relationships for the Refinery--1975	91
V-2	Actual Outside Demand, $\bar{d}$, for the Refinery Products, as Obtained from the Records, for the Months January through December of 1976	98
V-3	Total Amount to be Started into Production, $\bar{x}$, as Predicted by the Model, for the Months January through December of 1976	101
V-4	Summary of Refinery Costs--1975 . . .	106
V-5	A General Operating Plan for the Refinery	111
VI-1	Total Actual Amount Started Into Production, $\bar{x}$, as Obtained from the Records for the Months January through December of 1976	120
VI-2	The Chi-Square Statistic, x^2, and the Decision to Accept or Reject the Null Hypothesis	123
VI-3	Analysis of Production Losses for the Months January through December of 1976	126
A-1	Refinery Production During 1975 . . .	151
A-2	Refinery Production During 1976 . . .	152
A-3	Refinery Sales During 1975	153
A-4	Refinery Sales During 1976	154

Table Page

A-5 HFO Consumed in Production and Production Losses for 1975 and 1976 155

A-6 Amount Started into Production in Each Process During the Year 1975 156

A-7 Amount Started into Production in Each Process During the Year 1976 157

LIST OF FIGURES

Figure		Page
I-1	Model Technical Validity	12
III-1	Flow Chart of a Refinery Operation .	45
V-1	A Simplified Production Flow Diagram for the Refinery	84
V-2	Production Relationships Within the Refinery	85

APPLICATION OF INPUT-OUTPUT ANALYSIS TO PLANNING REFINERY OPERATIONS: A THEORETICAL AND EMPIRICAL STUDY

CHAPTER I

INTRODUCTION

Purpose of the Study

The purpose of this research is to apply input-output analysis to micro-economic planning. An input-output model has been developed, empirically tested, and validated. Ijiri,[1] Livingstone,[2] and others[3] have applied the input-output analysis to some hypothetical accounting problems, but not to actual operating systems. In this research, input-output analysis has been applied to the operations of an actual refinery. In order to examine the feasibility of using the model in micro-economic planning, the following issues have been emphasized.

1. Implementing the model. An input-output model has been developed and implemented using historical data obtained from the records of an actual refinery. The extent to which the input-output model represents the relationships existing in the refinery have been evaluated through the

use of model validation techniques.[4] Problems of implementation have been identified, evaluated, and, where possible, quantified.

2. Evaluate usefulness. To evaluate the usefulness of the model, the costs involved have been discussed and the information obtained from the model has been evaluated. It may be feasible to implement a model (Part 1) but uneconomical to do so. Evaluation of the information obtained from the model is included as a part of the model validation conducted in Chapter VI. Discussion of the costs involved is also considered, without details, in Chapter VI.

Statement of the Problem

Management accounting and the accountant's role in planning and controlling business activities have been discussed extensively in the accounting literature over the last two decades. Among the problems considered are joint costs, cost allocation models, inventory costing, budgeting, standard costs, variance analysis, etc. Several mathematical and statistical models have been suggested by different writers to help solve the above-mentioned problems. However, some issues related to the use of models are still unsolved, and need to be investigated further:

1. To what extent can we benefit from models which have been suggested?
2. To what extent do models succeed in describing existing real relationships?

3. What are the problems of implementation and how should these problems be pursued?

4. How do you justify the use of a particular model?

The problem, as dealt with in this research, is how to develop and test models that will facilitate the planning and control process by providing better, more timely, and lower cost information.

The Need for the Study

Input-output analysis has been productively applied to macro-economic analysis and planning. The input-output analysis originated by Leontief (1951) was used first to analyze the flows of commodities or services between the industrial sectors of an economy for the purpose of describing, analyzing, planning, and forecasting the industrial structure of a particular region.[5] The analysis, since then, has been applied successfully to macro-economic regional planning.[6] The United States Navy has used the input-output analysis to plan and develop personnel programs.[7] Other applications have been suggested to help control air pollution and man's hazardous emissions which affect the environment.[8] Moreover, input-output analysis has been used with great success in preparing national income accounts, in planning and forecasting public investments, in evaluating international trade, and other areas of macro-economic planning.[9]

A noted Operations Research consultant has pointed

out the benefits of modeling at the firm level. In his article "Operations Research and Decision-Oriented Management Information System," Professor Arnoff states:

> Through the application of operations research and computers, the accountant has a unique opportunity to control and mold his destiny. Here there are new horizons to challenge the accountant and, at the same time, dazzling opportunities to improve his ability and his performance in serving operating management . . . opportunities that arise through the design, development, and implementation of a decision-oriented management information system.[10]

Two other articles have emphasized the role of the accountant in providing reliable information to be used for decision making and as a member in an Operational Research team. Davidson and Trueblood have explained the link between the accounting process and the decision-making process:

> The tie between the accounting process and the decision-making process . . . is basically one of information. In its broadest and most fruitful sense, accounting is an information or data-providing function--and information of one kind or another is required at each stage of the problem-solving process.[11]

Hartley describes the type of information which is more likely to be needed in the future and indicates that the accountant should meet the new challenge:

> It perhaps can be argued that accounting is being replaced by the total information system. This, to a large extent, may be true. But we must come to a realization soon that there will be little demand in the future for the type of accounting we once knew. A redefinition of accounting will not help. What matters is the development of the profession and its members to meet the current needs of management by employing up to date techniques . . . since OR deals with the future, the relevant data may consist of projections based on past accounting recorded data as well as opportunity costs.

> Thus, the accountant should provide incremental data and opportunity costs if he is to contribute to the OR data collection process.[12]

Two academicians have postulated, using hypothetical examples, the potential advantages of input-output for micro-economic planning and control. Livingstone has pointed out some of the advantages of the input-output micro-model:

> . . . the technique [input-output] has advantages for planning and resource allocation purposes, and also for insuring proper coordination of input and output requirements.[13]

In addition, Ijiri has explained the propriety of the input-output model for business activities:

> The input-output analysis is an effective method of analyzing interacting transactions between two or more accounts. Such interactions are often seen in business activities, particularly in manufacturing activities.[14]

Livingstone supports different applications of input-output analysis to micro-economic planning and expects successful results:

> There seems to be no reason why it cannot be as valuable a technique for intrafirm as it has been for interfirm and inter-industry economic analysis.[15]

What is needed, then, is an objective study of the strengths and weaknesses of linear planning models in various operating contexts.

Based upon the foregoing statements the need for this kind of research is evident. This study should provide some evidence as to the applicability of input-output models to the planning and control functions of a refinery.

Methodology

The research is conducted in two stages. In the first stage, an input-output model is developed for the refinery under consideration and its performance is tested using historical data as obtained from the refinery records. In the second stage, technical validity of the input-output model is examined and the results are evaluated.

The following discussion explains where data for the study are obtained and the stages in which the study is conducted.

Source of data. Data for this study are obtained from a small size refinery located in Libya which, at their request, will not have its name revealed. The refinery is owned jointly by an American Company and a Libyan corporation. The refinery uses oil obtained from oil fields through pipelines.

The refinery represents one of the simplest refining systems. Re-refining and re-processing relations do not exist. Corrosive oils are not used in the refinery. Therefore, sophisticated equipment for highly corrosive oils are not used.

The refinery operates on a continuous basis using three shifts daily. Most of the time, the refinery is operated at its maximum capacity or near capacity.

Crude oil is processed in the refinery to produce six products. These products are:

Premium Mogas	(PMOG)
Regular Mogas	(RMOG)
Naphtha	(NAPH)
Kerosene	(KEROS)
Auto Diesel Oil	(ADO)
Heavy Fuel Oil	(HFO)

Information about production, consumption, losses, and sales was obtained directly from the refinery management. Data were obtained in the form of production reports which are prepared monthly by the refinery's superintendent. Data pertaining to the years of 1975 and 1976 were received. A summary of these data is presented in the Appendix to this study.

Next, the basic stages of this study are considered.

Stage (I). Acutal data obtained from the records of the refinery under consideration for the year of 1975 are used to build the input-output model for the refinery. For the purpose of this research, seven major processes within the refinery are identified. Inter-process relationships are described, identified and quantified. From these relationships, a consumption matrix is developed. The consumption matrix, C, describes production relationships and the flow of production from one process to another. The consumption matrix is presented in the following form:

$$C = \begin{bmatrix} c_{11} & c_{12} & \cdot & \cdot & \cdot & c_{17} \\ c_{21} & c_{22} & \cdot & \cdot & \cdot & c_{27} \\ \cdot & \cdot & \cdot & \cdot & \cdot & \cdot \\ \cdot & \cdot & \cdot & \cdot & \cdot & \cdot \\ \cdot & \cdot & \cdot & \cdot & \cdot & \cdot \\ c_{71} & c_{72} & \cdot & \cdot & \cdot & c_{77} \end{bmatrix}, \text{ where}$$

c_{ij} represents the amount of output from process i needed per each unit to be started into process j.

The system is related to the outside world through demand for its final products. This demand for final products, referred to in input-output terms as the bill of goods, is represented by a vector of quantities, $\bar{d}$:

$$\bar{d} = \begin{bmatrix} d_1 \\ d_2 \\ \cdot \\ \cdot \\ \cdot \\ d_7 \end{bmatrix}, \text{ where}$$

d_i = the net amount of product i available for distribution to outsiders.

The input-output mechanism is used to determine the total amount to be started into each process, $\bar{X}$, based on inter-process relationships, as expressed in the consumption

matrix, and to satisfy the outside demand for the refinery products. The total amount to be started into process is represented by a column vector, $\bar{X}$.

$$\bar{X} = \begin{bmatrix} X_1 \\ X_2 \\ \cdot \\ \cdot \\ \cdot \\ X_7 \end{bmatrix}, \quad \text{where}$$

X_i = the gross amount of production started into process i.

An input/output coefficient matrix is obtained by subtracting the consumption matrix from a seven-by-seven identity matrix:

Input/Output Coefficient Matrix = (I - C),

where I = a seven-by-seven identity matrix.

The input-output relationships for the refinery under consideration are expressed as follows:

$$(I - C)\bar{X} = \bar{d} \tag{1}$$

$$\bar{X} = (I - C)^{-1}\bar{d} \tag{2}$$

From these equations, the total amount to be started into process is easily determined for any level of outside demand.

Successful applications of input-output analysis

depend on the ability to obtain reliable estimates of the technological coefficients, the C_{ij}'s. Therefore, at this stage, the aim is to develop reliable technological coefficients for the refinery under consideration.

In building the consumption matrix, input rather than output coefficients are used. In addition, physical units of flow, expressed in barrels, are used to develop the transactions matrix.

The model as developed in this research is applied to planning refinery operations to test its applicability and predictive validity. The model is used to predict the total amount to be started into production in each process for the months January through December of 1976. Moreover, the model is used to develop a general operating plan for the refinery. This general plan explains how the model might be used by the refinery in planning for production requirements.

Stage (II). In stage one, the input-output model for the refinery under consideration is developed and empirically tested. In the second stage, the model validity is examined and the results obtained from the model are evaluated using statistical procedures.

Model validation. Schellenberger's framework for model validation includes three kinds of validity: (1) technical validity; (2) operational validity; and (3) dynamic validity. Schellenberger states:

> Three kinds of validity must be recognized: (1) technical validity; (2) operational validity; and (3) dynamic validity. Technical validity requires the identification of all divergences in model assumptions from perceived reality, as well as the identification of the validity of the data. Rarely will one be able to find an analysis in which the model perfectly fits reality and in which the data are entirely valid. Thus, the analyst and manager must raise the question of the impact--or influence--of these divergencies on the model's validity. Operational validity deals with the questions of the importance of the divergences which are identified under technical validity. Finally, we must assume that the model will continue to be operationally valid. This is called dynamic validity and requires an analysis of the provisions for the application to be modified in light of new circumstances.[16]

For the purpose of this study, technical validity of the refinery input/output model is examined. Operational and dynamic validities may be discussed in the future as extensions of this study.

Technical validity is identified as ". . . a set of criteria against which any application of managerial analysis may be compared."[17] In this analysis, a judgment about the importance of the divergence from the mode is not included. Judging the importance of the divergence from the model is the subject of operational validity, as indicated above. The primary components of technical validity are: (1) model validity; (2) data validity; (3) logical validity; and (4) predictive validity. Each is judged on the basis of sub-criteria as indicated in Figure I.1.

This set of criteria and subcriteria as outlined in Figure I-1 is used in this study to examine the technical validity of the input-output model as it is applied to

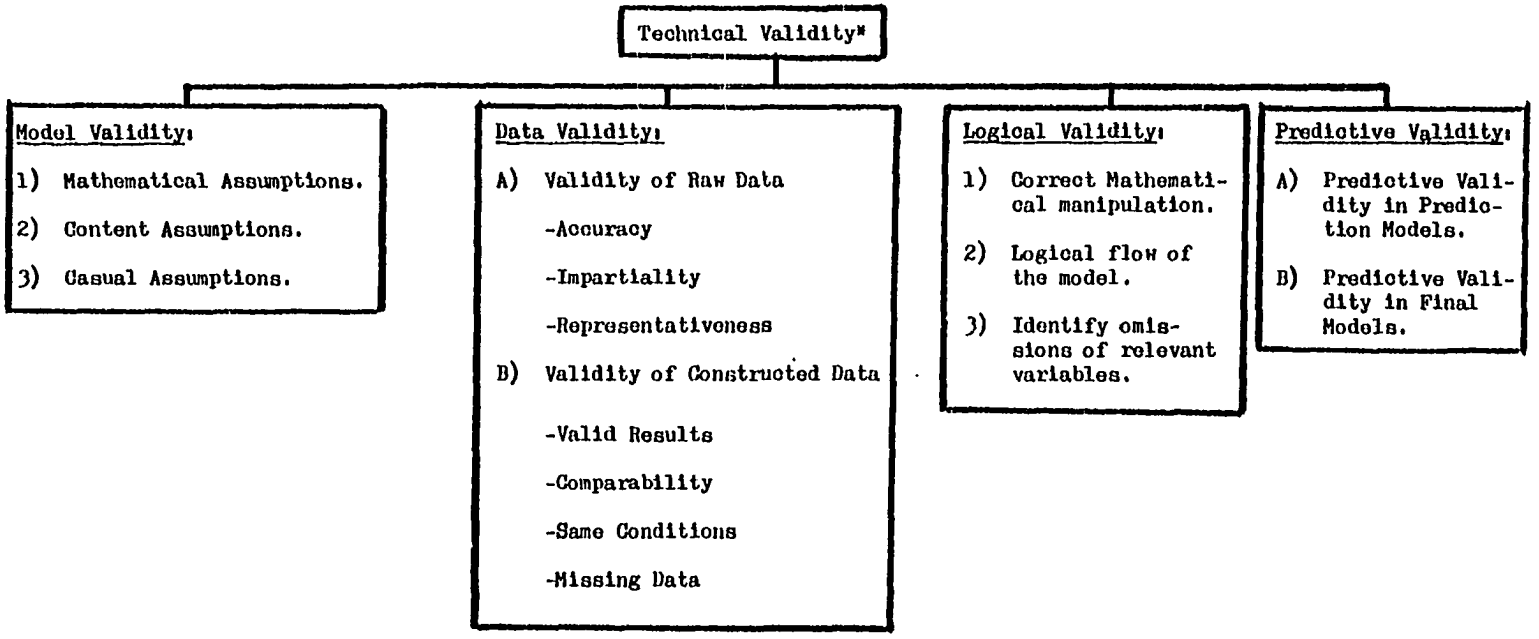

FIGURE I-1

Model Technical Validity

*This Figure is drawn by the author directly from the article written by Robert E. Schllenberger, "Criteria For Assessing Model Validity for Managerial Purposes". Decision Sciences, Vol. 5, No. 4, October, 1974.

planning refinery operations.

Schellenberger's framework for model validation is selected because it offers a more comprehensive approach upon which model validation might be based.

Evaluation of the results. To evaluate the results obtained from the model the chi-square "goodness of fit" test is used. The chi-square test is frequently used to evaluate the applicability of a theory or a mathematical model under certain circumstances.[18] The basic hypotheses to be evaluated are stated in the following form:

H_o: The operations of a simple refinery can be expressed in terms of an input-output model with sufficient validity to be of value in the planning and control of refinery operations.

H_a: The operations of a simple refinery cannot be expressed in terms of an input-output model with sufficient validity to be of value in the planning and control of refinery operations.

If the differences between the actual $(\bar{x})$, which represents the total amount to be started into process, vector and the calculated $(\bar{x})$ obtained from the model are insignificant, the null hypothesis is accepted. If the differences are significant and cannot be attributed to chance fluctuations, the null hypotheis is rejected.

The chi-square statistic, x^2, is calculated using the following equation:

$$x^2 = \sum_{o=t=1}^{n} \frac{(f_o - f_t)^2}{f_t},$$

where f_o = an observed frequency (calculated frequency),

f_t = an actual frequency, and

n = the number of observations.

The chi-square goodness of fit test is used in two ways. First, the chi-square statistic, x^2, is calculated on a month by month basis for the months of January through December of 1976. In this case, for each month there are seven observations representing the amount to be started into each of the seven processes included in the model. Therefore, the number of degrees of freedom is six, degrees of freedom equal the number of observations minus one (7 - 1). The null hypothesis, as stated above, is tested at three levels of significance. The levels of significance are arbitrarily selected. The null hypothesis is tested at the 2%, 5%, and 10% levels of significance.

Second, the chi-square statistic, x^2, is calculated for each process. In this case, there are twelve observations for each process, representing the amount to be started into that process for each month during 1976. Therefore, the number of degrees of freedom is eleven (12 - 1). The null hypothesis, in this case also, is tested at the 2%, 5%, and 10% levels of significance.

Organization of the Study

In Chapter II, the input-output model is discussed in general. The model is described, and its structure is explained. Different applications of the model to micro planning problems are reviewed with specific applications to cost accounting problems being emphasized. Also, a discussion of how the input-output model might be extended into a linear program is included.

In Chapter III, refinery accounting is discussed along with the basic accounting concepts underlying refinery accounting and the problems encountered in refinery planning. Current developments and their implications for refinery accounting are also discussed in Chapter III.

In Chapter IV, applications of linear programming to different refining problems are reviewed. The difference between previous applications and the expected contribution of this study is outlined.

In Chapter V, the input-output model for the refinery under consideration is developed and its applicability is tested. The model is used to predict the total amount to be started into each process in order to satisfy the final demand for the refinery outputs. In addition, the model is used to develop a general operating plan for the refinery.

The results obtained from the model are explained and analyzed in Chapter VI. The model's technical validity

is examined and results are evaluated. Model validation techniques and statistical procedures are applied as needed to help in the analysis. In addition, costs associated with the model are briefly considered in Chapter VI.

Finally, the scope of the study along with summary of the results and recommendations are presented in Chapter VII.

The Appendix includes a summary of the refinery's data which were used for the purpose of this study.

FOOTNOTES TO CHAPTER I

[1]Yuji Ijiri, "An Application of Input-Output Analysis to Some Problems in Cost Accounting," Management Accounting (April 1968).

[2]J. L. Livingstone, "Input-Output Analysis for Cost Accounting, Planning and Control," The Accounting Review (January 1969).

[3]A. B. Richards, "Input-Output Accounting for Business," The Accounting Review (July 1960); N. C. Churchill, "Linear Algebra and Cost Allocations: Some Examples," The Accounting Review (October 1964).

[4]R. E. Schellenberger, "Criteria for Assessing Model Validity for Managerial Purposes," Decision Sciences, Vol. 5, No. 4 (October 1974); E. F. Stafford, Techniques of Model Validation, paper presented at the SIMSCRIPT and Simulation Conference, Consolidated Analysis Centers, Inc., Washington, D.C., September 20, 1976.

[5]R. Mattessich, Accounting and Analytical Methods, (Homewood, Illinois: Richard D. Irwin, Inc., 1964), p. 296.

[6]H. W. Richardson, Input-Output and Regional Economics (New York: John Wiley & Sons, 1972).

[7]S. W. Sorensen and R. E. Willis, An Input-Output Model for Manpower Planning in Large-Scale Systems (San Diego, Calfornia: Navy Personnel Research and Development Center).

[8]E. F. Stafford, "An Analytical Model of the World Sulphur Cycle"; B. McCarl, D. Raphael and E. F. Stafford, "The Impact of Man on the World Nitrogen Cycle," Journal of Environmental Management, Vol. 3, No. 1 (April 1975).

[9]D. F. Gossline, Input-Output and Throughput: Proceedings of the 1971 Norwich Conference (London: Input-Output Publishing Company, 1975).

[10]E. L. Arnoff, "Operations Research and Decision-Oriented Management Information System," Management Accounting (June 1970).

[11]H. J. Davidson and R. M. Trueblood, "Accounting for Decision-Making," The Accounting Review (October 1961), p. 578.

[12]R. V. Hartley, "Operations Research and Its Implications for the Accounting Profession," The Accounting Review (April 1968), p. 327.

[13]Livingston, op. cit., p. 56.

[14]Ijiri, op. cit., p. 61.

[15]Livingstone, op. cit., p. 64.

[16]Schellenberger, op. cit., p. 645.

[17]Ibid., p. 645.

[18]M. Hamburg, Statistical Analysis for Decision-Making (New York: Harcourt, Brace and World, Inc., 1970).

CHAPTER II

THE INPUT-OUTPUT MODEL

The input-output analysis, as perfected by Leontief,[1] is concerned with the study and analysis of the flow of commodities and services between the industrial sectors of an economy. Professor Mattessich described the input-output analysis as follows:

> The input-output analysis inspired by the general equilibrium approach of Leon Walras (1874) and originated by Wassily Leontief (1951) is concerned with analyzing the flow of commodities or services between the industrial sectors of an economy for the purpose of describing, analyzing, planning, and forecasting the industrial sectors of a particular region.[2]

The input-output analysis, developed as a macro-economic tool, was first used to describe and analyze the American economy for the period 1919-1939.[3] Since then, the model has been applied successfully in macro-economic planning and forecasting. It has been applied extensively in the field of regional economic planning.[4] Other uses of the input-output analysis have been found in the process of constructing national income accounts, in planning and forecasting public investment, and in evaluating international trade.[5] Efforts have been exercised to extend the input-output analysis through its application to different areas of micro-

economic planning. In addition, several authors have outlined possible applications of the input-output analysis to accounting problems at the firm level.

The Model Described

The input-output analysis makes use of matrix algebra in the solution of simultaneous linear equations. Different writers have taken different approaches in describing the model and its use. However, they all come to similar results and conclusions. The analysis and discussion presented in this part of the study follows the presentation used by Draper and Klingman.[6] In describing the input-output analysis, Draper and Klingman state:

> Analysts frequently find it convenient to think of a manufacturing firm as a 'black box' with an input of various kinds of raw materials and an output of finished products. Similarly, all the firms that manufacture the same type of finshed products can be considered as an industry group that takes similar kinds of inputs and transforms them into finished products. In economics, the systematic recording of inputs used by all industries in the economy, expressed in mathematical form, is referred to as input-output analysis.[7]

To explain the system, assume that an economy is divided into (M) industries, and each industry produces only one type of output. Industries are interrelated in a sense that each industry must use some of the others' products. In addition to the amount consumed by different industries each industry must satisfy demand by entities other than industries. This demand is defined as the final demand for the industry's product. One use of input-output analysis is

to determine the production requirements of each of the industries if final demand changes, assuming the structure of the economy does not change.

Assuming that C_{jk} represents the total dollar amount of the products of industry j used by industry k, and h_j is the final demand for the products of industry j, it follows that $X_j = \sum_{j=1}^{m} c_{jk} + h_j$, where X_j represents the total output of industry j. For this hypothetical economy, Table II-1 is prepared to summarize input-output relations.

TABLE II-1

Input-Output Relations for an Economy Consisting of M Industries

		User				
Industry		1	2 --- m		Final Demand	Total Output
Product	1	C_{11}	$C_{12} \cdots C_{1m}$		h_1	X_1
	2	C_{21}	$C_{22} \cdots C_{2m}$		h_2	X_2
	.	.	.	.	.	.
	.	.	.	.	.	.
	.	.	.	.	.	.
	m	C_{m1}	C_{m2}	C_{mm}	h_m	X_m

The technical matrix which represents the structure of the economy is represented by $A = a_{jk}$, where $a_{jk} = \frac{C_{jk}}{X_k}$. The element a_{jk} can be explained as the dollar value of the

output of industry j which industry k must purchase to produce one dollar's worth of its own products. For a stable economy each industry must produce output to satisfy other industries' needs as well as final demand. The interindustry demand can be written in matrix form as AX, where

$$A = \begin{bmatrix} a_{11} & a_{12} \cdots & a_{1m} \\ a_{21} & a_{22} \cdots & a_{2m} \\ \cdot & \cdot \cdots & \cdot \\ \cdot & \cdot \cdots & \cdot \\ \cdot & \cdot \cdots & \cdot \\ a_{m1} & a_{m2} \cdots & a_{mm} \end{bmatrix}, \text{ and } X = \begin{bmatrix} X_1 \\ X_2 \\ \cdot \\ \cdot \\ \cdot \\ X_m \end{bmatrix}$$

And the final demand vector can be written as H:

$$H = \begin{bmatrix} h_1 \\ h_2 \\ \cdot \\ \cdot \\ \cdot \\ h_m \end{bmatrix}, \text{ where}$$

A_{jk}, h_j, and X_j all must be ≥ 0 for j = 1, 2 ---m, and k = 1, ...m.

Now the general model can be written as follows:

$$X = AX + H \tag{1}$$

And the solution to the system is obtained as follows:

$$(I - A)X = H \tag{2}$$

$$X = (I - A)^{-1} H \tag{3}$$

Given a stable and linear economic structure (the technological matrix does not change) the model can be used to determine the final output needed for any expected level of final demand.

The input-output models might be either open or closed models. In an open model, one or more of the variables will be determined exogenously (outside the model), where in a closed model all variables are determined endogenously (within the model).

Leontief's initial work included a closed input-output model for the American economy. However, experience has indicated that open models have been extensively applied to a wider range of problems.

In most of the input-output studies, the final demand vector is considered the open-end of the system, that is determined exogenously. Also the input-output model might be a static or a dynamic model. In static models, capital transactions are not included and only operating transactions

are included, while in dynamic models, capital transactions are also included.

The usefulness of input-output analysis in macroeconomic analysis and forecasting is now well accepted. Many authors have suggested that the methodology of input-output analysis may be equally useful for planning and control at the firm level. The nature of the proposed uses of input-output analysis at the firm level are reviewed next.

Input-Output Analysis in Accounting Literature

For a long time, conventional accounting was mainly concerned with the past. Accountants used to present historical data which were used for different analyses and as the basis for business decisions. Moreover, accountants seemed to be conservative in dealing with the future and in using mathematical models, as was pointed out by Mattesich:

> Traditionally, accounting has been directed toward the past; only relatively recently with the spread of budgeting, standard costing, and input-output analysis, has an immediate orientation toward the future come about. . . . There exist many tokens that accounting is in a position to make important contributions, on the micro- and macro- level, to the projection of future economic data. Thus, during the next decade the center of gravity of accounting might shift from the descriptive-legalistic to the analytic-predictive side.[8]

Application of quantitative methods to solve accounting problems, especially cost accounting problems, started in the late 1950's with the advent of computers. Before this time, cost accountants used generalized approaches to estimate

and to solve cost accounting problems. Since model application, at that time, was neither economical nor timely because of the difficulty in obtaining solutions to the models. Advancement in computer technology in the 1950's has allowed a multiple number of mathematical operations to be performed in a relatively short period of time and at lower cost. As a result, a great number of articles have appeared in accounting literature, within the last two decades, dealing with quantitative aspects of linear models. Arnoff, among others, has pointed out possible impacts of linear models on accounting education and practice:

> Linear programming is so effective, and often so essential, in developing meaningful costs that I feel safe in saying that, in the not too distant future, it will be firmly established as an integral part of all accounting education and, eventually, accounting practice.[9]

In addition, Mattesich has discussed possible applications of matrix algebra to explain accounting systems and to develop a general framework for accounting theory:

> There are strong indications that the matrix formulations of accounting facilitate not only the classifying analysis of flows, but also the explanation why such flows occur. The combination of accounting equations with production functions by means of matric concepts has been successfully initiated in input-output accounting and might find further application and extension (to liquidity preference and investment functions and so on) in other kinds of accounting systems.[10]

Several short-run and long-run planning models have been used to help solve planning problems at the micro-level. The accounting literature in the last two decades has been

enriched with many articles dealing with modeling business operations and applying different mathematical and statistical techniques to help solve accounting problems. Linear-programming techniques have been widely used in solving different planning problems at the micro-level.

However, the first attempt to apply input-output analysis to micro-planning, that the writer is aware of, was made by Professor Richards in 1960.[11] The model he proposed consisted of translating a complete accounting system in the form of an open input-output model. His goal was to illustrate the relationship between input-output analysis and business accounting and to indicate how input-output accounting might be used as a tool for financial analysis and planning.

He grouped the accounts of a real company into five groups: current and other nonfixed assets, fixed assets (net), all equity accounts, balance account (a fictitious account which represents debits and credits to the balance of the operating accounts normally found in a business accounting system). He then used the model to predict changes in the levels of the balance sheet accounts which arise from some level of operations, to analyze the dollar flows into and out of the accounts, and to investigate the impact on the accounting system and levels of accounts caused by changes in operating levels and conditions.

His findings indicated that the differences between

computed and actual debits to the current assets and equity accounts were insignificant. On the other hand, the differences between the computed and actual results for the balance and fixed assets accounts were significant. The results indicate, as he said, that the coefficients for the current assets and equity accounts were quite stable from year to year. However, the coefficients for the balance and fixed assets accounts indicated much less stability:

> It was found that the estimated changes were very close to actual changes for two accounts and somewhat variable for the other two accounts. The input-output system provides a method whereby management can predict changes in the level of the balance sheet accounts which arise from some level of operations, analyze the dollar flows into and out of accounts, or investigate the impact on the accounting system and level of accounts brought about by changes in operating levels and conditions. The framework common to all firms also provides a uniform procedure for aggregating firm data and thus a method of consistently establishing an inter-firm analysis for an industry or an inter-industry analysis for the economy.[12]

One important argument raised against Richards' model was based on the fact that the model attempts to subject all the accounts of a business enterprise to the assumptions of input-output analysis. While the production accounts of an enterprise can be subjected to input-output type of analysis and assumptions, the other accounts of the enterprise may contain many irregular items and adjustments which make their estimation by input-output methods subject to wide margins of error.[13]

Williams and Griffin[14] have explained, using hypothetical examples, the applications of matric algebra to

solve some accounting problems. Their work extended matrix theory to the problem of cost allocation when reciprocal relationships exist:

> In respect to reciprocally related accounting elements, matrix theory may be usefully applied both in aid of calculational simplicity and in promoting a clear understanding of the basic structure of the interrelated elements.[15]

They explained the problem of reciprocal relationships using the example of an employee profit sharing bonus. They outlined the problem in a matrix form, $AX = B$. Then, the solution was obtained using the technique of the matrix inverse, $X = A^{-1}B$. In another application, they extended matrix theory to another type of business problems involving the allocation of costs incurred in service departments to producing departments. They have described the existing departmental relationships in terms of simultaneous linear equations and used matric concepts to obtain solution to the system. Their findings were, theoretically, reasonably sound. However, their model was not tested in real situations.

Neil Churchill postulates that linear algrebra can be useful in representing and solving allocation and analysis problems encountered in cost accounting.[16] He illustrated, using hypothetical examples, how linear algebra is used to solve the following problems: (1) reciprocal cost allocation; (2) the analysis of costs charged to various departments and inventory accounts in a simple process cost system; (3) the analysis of residual cost balances in cost collection centers

under changing cost incurrence conditions; and (4) the analysis of product costs under varying levels of expenditures.[17]

Churchill recast the abovementioned accounting problems in matrix form. Then, matrix techniques were used to obtain solutions to these problems. As Churchill has indicated, the intent of his paper was not the immediate applicability. Rather, the purpose of his paper was to explore some possible areas for mathematical analysis in the research and the teaching of accounting. His paper is considered among the pioneer studies dealing with mathematical applications in accounting.

A more comprehensive analysis of input-output analysis was conducted by Farag. His work has outlined the historical background for input-output analysis, reviewed its previous applications and examined its applicability to micro-economic accounting.[18] Farag used input-output analysis to describe the operations of a divisionalized enterprise. The model that he proposed is a static open-end input-output model. It is a static model because it is concerned only with operating transactions and does not include capital transactions. The open-end in the model is represented by the sales and inventory requirements which are determined outside the model (exogenously). This model was used to predict total output needed to meet a given outside demand for the products of the enterprise:

> Using the sales forecast and inventory requirement information, it is possible to use the micro input-output model to obtain conditional point predictions of the levels of production in each department corresponding to each level of sales. The model also permits the calculation of the costs and profits associated with each production program. This method of planning enterprise activities ensures the consistency of the plan in the sense that overproduction or bottlenecks can be avoided, assuming the accuracy of the sales forecasts.[19]

Farag has pointed out some of the basic advantages of the input-output model:

> The micro input-output model, therefore, possesses the advantage of integrating all the relevant cost accounting data in one unified framework and of using these data in a systematic manner to prepare a budget or a plan.[20]

The model was used to predict total outputs of each department, given final demand predictions and inter-department demand. Farag suggests the use of certain measures to ensure that predicted data and actual data are in an acceptable range.

Farag has concluded that the assumptions underlying the micro input-output model will always turn to be its limitations in every application where these assumptions are not good approximations of the real situation.[21] He further states that the model has three general limitations. First, the model does not incorporate explicitly the constraints on the resources available to the enterprise and thus it may yield non-feasible solutions. Second, the model does not permit optimization. Finally, the model relies on the existence of market prices for all inputs and outputs, i.e.,

it is incapable of independent price determinations.[22] To overcome the first of the three general limitations mentioned above, Farag suggests the conversion of the input-output model into a linear programming model. Using the primal and dual solution of linear programming and the decomposition principle, the output of a divisionalized enterprise can be optimized subject to a set of operating constraints.[23]

Ijiri (1968) has described input-output analysis and explained its possible application to different cost accounting problem areas.[24] Ijiri's work represents a comprehensive review of a number of cost accounting problems for which input-output analysis can provide practical solutions. Ijiri states the purpose of his paper as follows:

> The purpose of this paper is to select some cost accounting problems and apply the techniques of input-output analysis in order to make more effective use of the accounting data.[25]

In his paper, Ijiri has explained the flow of costs within a hypothetical factory in terms of input-output relations. Using the technique, he calculated the per unit cost and total costs; summarized data for general journal entries; and estimated the effect of price changes (prices of materials, labor, and overhead) on total production costs. He demonstrated that input-output analysis can be implemented using either input or output coefficients based on dollar amounts or physical quantities:

> . . . even if the data is shown in physical quantities, we can make the detailed analysis by dealing with

> the input coefficients as well as by dealing with the output coefficients.[26]

Ijiri's work is considered a milestone for input-output application to cost accounting problems and micro planning. His findings are concluded as follows:

> The input-output analysis is an effective method of analyzing interacting transactions between two or more accounts. Such interactions are often seen in business activities, particularly in manufacturing activities. . . . Two approaches are possible to the interacting transactions--one based on the output coefficients and the other based on the input coefficients. Both approaches can achieve the same results. . . . It was shown by numerical examples how various useful data can be derived when the input-output analysis applied to cost data. The areas in business operation where such an application of the input-output analysis are useful will be expanded more in the future as we know more about the regularities that may exist in business operations.[27]

Gambling has presented and described a model-building technique to cope with accounting problems due to frequent technological changes.[28] He explained a technological model, which he developed with other associates, to be used in input-output analysis and cost accounting. This model, as Gambling points out in his paper, was found not merely feasible but virtually essential for the solution of a practical problem. In his paper, Gambling has explained this model using the example given by Ijiri in his above mentioned article.

Livingstone has outlined possible applications of input-output analysis to micro-economic planning.[29] He recasted, in an input-output framework, the example used by Williams and Griffin. In his paper, Livingstone has indicated that input-output analysis is used to allocate costs, to

record transactions, and, most important, to facilitate forecasting and planning business operations.

He started by constructing the transaction matrix from which different uses of the input-output analysis can be derived:

> Input-output applications normally proceed by gathering the data for the transactions matrix and then computing the technological coefficients from these data.[30]

Moreover, Livingstone has explained how input-output analysis is used to predict and plan total production if the final demand is projected:

> . . . it has been shown how any vector of expected final demand can be translated into the required vector of primary inputs. In addition, we have shown how to derive the associated interactivity transactions . . . the technique has advantages for planning and resource allocation purposes, and also for ensuring proper coordination of input and output requirements. In fact, it conforms to the normal budgeting procedure of commencing with expected sales and then working back to determine production and other budgets consistent with the sales forecast. However, in the standard budget procedure this internal consistency is not assured as it is in input-output analysis--where the output of any activity is consistent with the demands, both final and from other activities, for its product.[31]

Livingstone has explained how to convert a monetary transactions matrix into physical units and unit costs. He stated that using physical units and unit costs is more effective because it enables the management to separate the price and the quantity effects. He further demonstrated that input-output analysis can be extended to include production for inventories as well. Professor Livingstone expects that input-output will be as valuable for intrafirm as it has

been for interfirm and interindustry economic analysis.

Feltham (1970) has pointed out how linear algebra and linear programming techniques can be used in planning business operations.[32] He explained how the accountant can use these techniques to help estimate per unit costs for various products and calculate the estimated total activities and inputs required to achieve a given level of net output.

Feltham used both input-output analysis and linear programming in his paper. His work extended input-output analysis to include by-products. He started his analysis by building input-output matrices, using physical units, for a multi-product production system. Then, he extended the analysis by using linear programming techniques to find optimum production levels under a set of operational constraints.

Butterworth has proposed a multi-stage input-output model from which all possible alternatives may be derived as special cases:

> Our principal purpose is to show that all the possible models of input-output analysis for a given problem may be derived from a single general model, under one or two alternative sets of assumed conditions, each leading to a distinct concept of economic activity. One such set of conditions applies to the output-oriented systems, designed to determine the unknown inputs for a given output, and the other to the less common input-oriented systems, in which the inputs are given and the outputs are unknown. Only under exceptional circumstances can both sets of conditions be satisfied by the same system.[33]

Kaplan (1973) studied the variable and self-service costs in allocation models.[34] His work was basically to

analyze alternative cost allocation models by relating them to cost functions obtained from input-output models. In his paper, Kaplan estimated incremental costs based on information obtained from input-output models.

Russo anticipates increasing application of input-output models in the areas of financial decision-making.[35] He states that the input-output model is to be preferred when compared with regression forecast and trend projections:

> There are a few of the different ways the ideas of input-output analysis are being used or can be used in some areas of financial decision-making. There are many more. The growing interdependence in our society and the world will demand a greater utilization of this tool. I expect that with this growth will come its application to areas other than those that are sales dependent.[36]

Extending the Micro Input-Output Model Into a Linear Program

The input-output model does not indicate the optimal solution under certain conditions. In this respect, Farag states:

> . . . all production activity being carried out at a certain point of time can be represented by the input-output matrix of coefficients or technology matrix at unit level which leaves open a whole range of possible production arrangements.[37]

For this reason, Farag and others recommended that the linear programming model should be used along with the input-output model to arrive at optimal solutions. To convert into a linear program, either the primal or the dual linear programming problem is used.

The primal linear programming problem. In this case, the objective is to maximize the enterprise's profit. Using matrix notations, as developed in the input-output model, the primal problem is constructed as follows:

$$\text{Max} \qquad P = c\bar{x}$$

subject to:

$$A\bar{x} \leq e$$

$$\bar{x} \geq 0$$

where:

P = total profit

c = vector of profit margin

$\bar{x}$ = vector of outputs

A = matrix of input-output coefficients

e = vector of input constraints

The dual linear programming problem. The dual problem is always associated with the primal problem. If the objective of the primal is to maximize, the dual will be a minimization problem and vise versa. In the primal problem stated above, the purpose is to find a vector of non-negative outputs $\bar{x}$, that maximizes profits. In the dual problem, the purpose is to find a vector of non-negative input shadow prices $\bar{w}$, that minimizes costs. The dual problem is stated as follows:

$$\text{Minimize} \qquad Z = e'\bar{x}$$

subject to:

$$A'\bar{w} \geq c'$$

$$\bar{w} \geq 0$$

where:

z = total value of the resources

e' = the transpose of inputs constraint vector

$\bar{w}$ = vector of input shadow prices

A' = the transpose of input-output matrix of coefficients

C' = the transpose of the vector of profit margins.

For each input i, there is a dual variable $\bar{w}_i$ which is called the imputed value or shadow price of that input. The shadow price has nothing to do with actual cost. It represents the marginal contribution of that input to the total profits. It simply measures the rate of change in total profit with respect to each input, that is:

$$\bar{w}_i = \partial P / \partial e$$

The above presentation indicates how linear programming may be used to complement input-output analysis in order to achieve maximum profits under certain operation constraints. The objective of combining both techniques is to provide better information for planning purposes. The above analysis is not prepared in detail, since the integration of linear programming with input-output analysis is beyond the scope of this study.

FOOTNOTES TO CHAPTER II

[1]W. W. Leontief, The Structure of American Economy, 1919-1939--An Empirical Application of Equilibrium Analysis, 2nd ed. (New York: Oxford University Press, 1951).

[2]R. Mattessich, Accounting and Analytical Methods, First Printing (Homewood, Illinois: Richard D. Irwin, Inc., 1964), p. 295.

[3]Leontief, op. cit.

[4]C. K. Liew, The Structure of the Oklahoma Economy (1958-1970) (Norman, Oklahoma: University of Oklahoma, College of Business Administration, Center for Economic and Management Research, 1976), pp. 1-62; and H. W. Richardson, Input-Output and Regional Economics (New York: John Wiley & Sons, 1972).

[5]W. F. Gossling, Input-Output and Throughput--Proceedings of the 1971 Norwich Conference (London: Input-Output Publishing Company, 1975).

[6]J. E. Draper and J. S. Klingman, Mathematical Analysis: Business and Economic Applications, First Edition (New Nork: Harper and Row, Publishers, 1967).

[7]Ibid., p. 490.

[8]Mattessich, op. cit., p. 295.

[9]E. L. Arnoff, "Operations Research and Decision-Oriented Management Information System," Management Accounting (June 1970), p. 16.

[10]R. Mattessich, "Towards a General and Axiomatric Foundation of Accountancy," Accounting Research (October 1957), p. 348.

[11]A. B. Richards, "Input-Output Accounting for Business," The Accounting Review (July 1960), pp. 429-436.

[12]Ibid., p. 436.

[13]S. M. Farag, "A Planning Model for the Divisionalized Enterprise," The Accounting Review (April 1968), p. 319.

[14]T. H. Williams and C. H. Griffin, "Matrix Theory and Cost Allocation," The Accounting Review (July 1964), pp. 671-678.

[15]Ibid., p. 671.

[16]N. Churchill, "Linear Algebra and Cost Allocations: Some Examples," The Accounting Review (October 1964), pp. 894-904.

[17]Ibid., p. 894.

[18]S. M. Farag, Input-Output Analysis: Applications to Business Accounting (Urbana, Illinois: Center for International Education and Research in Accounting, 1967); and S. M. Farag, "A Planning Model for the Divisionalized Enterprise," The Accounting Review, (April 1968).

[19]Farag, A Planning Model for the Divisionalized, pp. 314, 315.

[20]Ibid., p. 315.

[21]Ibid., p. 320.

[22]Ibid.

[23]Farag, Input-Output Analysis: Applications to Business Accounting, pp. 102-114.

[24]Yuji Ijiri, "An Application of Input-Output Analysis to Some Problems in Cost Accounting," Management Accounting (April 1968), p. 59.

[25]Ibid., p. 49.

[26]Ibid., p. 58.

[27]Ijiri, op. cit., p. 61.

[28]T. E. Gambling, "A Technological Model for Use in Input-Output Analysis and Cost Accounting," Management Accounting (December 1968).

[29]J. L. Livingstone, "Input-Output Analysis for Cost Accounting, Planning and Control," The Accounting Review (January 1969), p. 51.

[30]Ibid., p. 53.

[31]Ibid., p. 56.

[32]G. A. Feltham, "Some Quantitative Approaches to Planning for Multiproduct Production System," The Accounting Review (January 1970).

[33]J. E. Butterworth and B. A. Sigloch, "A Generalized Multi-Stage Input-Output Model and Some Derived Equivalent Systems," The Accounting Review (October 1971), p. 701.

[34]R. S. Kaplan, "Variable and Self-Service Costs in Reciprocal Allocation Models," The Accounting Review (October 1973).

[35]J. A. Russo, Jr., "Input-Output Analysis for Financial Decision-Making," Management Accounting (September 1976).

[36]Ibid., p. 24.

[37]Farag, Input-Output Analysis: Application to Business Accounting, p. 103.

CHAPTER III

REFINERY OPERATIONS DESCRIBED

In this chapter, the oil refining process is described, the financial characteristics of refining operations are explained, and the future of planning and control in refinery operations is considered.

Oil Refining Processes

In the oil refining industry, crude oil is used to produce several products for different uses. Crude oil comes into the refinery where high heat temperatures and different cracking methodologies are used, in processing crude oil, to produce several products.

Describing oil refining, Mr. Waters states:

> The leading processes, simply classified, which are chiefly utilized are: topping, cracking, reforming, lube manufacture and catalytic processes for specialized products. Crude oil comes to the refinery a single homogenous material, which when charged into toppig stills is separated by the process of boiling or distillation into gases, gasoline, kerosene, fuel oils, lubricating oils, asphalt, coke, and many other products and chemical compounds. This is accomplished by heating to successively higher degrees of temperature and the vapors of the various overhead light products are separated. Each of these constituent portions of the raw crude oil has a different boiling or vaporization point. The vapors are passed from the still to condensers where, by cooling, the vapors become liquid products. The products so secured may be either finished or unfinished, depending on

> the type or kind of distillation that produced it and the particular specifications. If unfinished, the product may be redistilled, washed, treated with chemicals, filtered, or subjected to some further special processing. The other processes all utilize the application of heat and seek as their purpose a molecular rearrangement to produce the desired products; cracking, reforming, polymerization, hydrogenation, and catalytic reaction comprise this group, and they are generally found in a variety of combinations of methods and processes in any individual refinery.[1]

Another simplified description of oil refining, which might contribute to a better understanding of refinery processing, has been developed by Mr. Fox:

> Refining in its elementary form involves vaporizing of the crude oil by heating it to a high temperature, collecting the resulting vapors, and condensing them back into liquid state. The basic Petroleum Products are obtained through a physical change caused by the application of heat through a wide temperature range. The initial application of heat drives off the lightest fractions, the napthas and gasoline; the successively heavier fractions such as kerosene and gas oil, follow as temperature rises. This process of varpoizing the crude and condensing the gaseous vapors to obtain the various "cuts" is commonly referred to as primary distillation. Certain of these cuts are marketable with but little treating while it is necessary for the others to undergo further processing in order to make them more readily salable and, therefore, more valuable. Thus, heavier fractions, such as kerosene and gas oil, may be subjected to cracking and, consequently, made to yield a more valuable product, i.e., gasoline. The heaviest of the fractions resulting from primary distillation is known as residuum or heavy bottoms. The residuum, after processing, treating, and blending, forms lubricating oils and ancillary wax or asphalt products. The unit which brings about this physical separation of the crude oil into its component fractions might be thought of as constituting the primary process in refining. As the primary process, it separates the various fractions which may serve as charging stocks for the secondary processes. The term "charging stock" as used in refining terminology refers to unfinished products which are to be further processed in some secondary refining operation. These secondary processes constitute additional refinery treatments which either result in new products or bring primary products up to required quality standards.[2]

The refining process starts with crude distillation which is performed in the fractionating tower. In the fractionating tower, heat is applied at a wide temperature range which will cause products with lowest boiling points to vaporize first and rise to the top of the tower. Similarly, the products with the highest boiling points will remain near the bottom of the tower. Other products will come off in between according to their boiling points. The products obtained through this process are called "raw products." They have to be treated or further processed before they are sold. Schmeltz[3] listed the usual processes involved as follows:

1. Thermal Cracking. This process applies heat and pressure to break down the heavier molecules of fuel oils and distillates into gasoline of high anti-knock quality.

2. Catalytic Cracking. This more recent cracking process also is designed to increase the yield of high quality anti-knock gasoline by changing the molecular structure of fuel oils and distillates.

3. Catalytic Reforming. This process upgrades low octane naphtha to high octane gasoline by a rearrangement of molecular structure. It also produces some commercial chemicals such as benzene.

4. Polymerization. This process converts the light ends such as propylenes and butylenes, which are by-products of other cracking processes, into gasoline, a heavier product. It consists of uniting smaller hydrocarbon molecules into products with larger molecular structures. There are both thermal and catalytic polymerization methods.

5. Alkylation. This process is similar to polymerization except that it combines dissimilar light-end molecules. It unites propylene and butylene with isobutane to produce a high quality and relatively stable product important to the blending of aviation gasoline.

6. Other Special Processes. Solvent extraction, lube oil manufacturing, isomerization, aromatization, hydrogenation, dehydrogenation, and many other chemical names are used to describe special processes which alter hydrocarbon structures to produce improved fuels and lubricants. These special units are the result of refiners' efforts to maximize their yields from crude oil. A large refinery might have all of the above special units.

7. Treating Processes. After the product meets its specifications, it usually has to be treated to remove objectionable odors and corrosive substances. Treating plants further process raw products to reduce gum formation and stabilize color.

8. Blending Processes. Gasolines are blends of various products. In this process, gasoline stocks and alkylates from the process described above are mixed with varying quantities of purchased materials--aromatics, tetraethyl lead, and butane--to produce high quality gasoline products.

Therefore, oil refining is the process of converting crude oil into several usable products. The process has one main input, crude oil, and several outputs represented by the different products produced. Refinery operations are very complex especially when primary and secondary processing exist together in huge refineries.

A simple and partial flow chart of a refinery operation is shown in Fig. III-1. In most operational refineries there are many more stages and many more fractions at each stage. However, Fig. III-1 will suffice for the purpose of this research and will help the reader visualize and better understand the refining process.

The oil refining industry has developed from a very simple process to a highly complicated industry. The

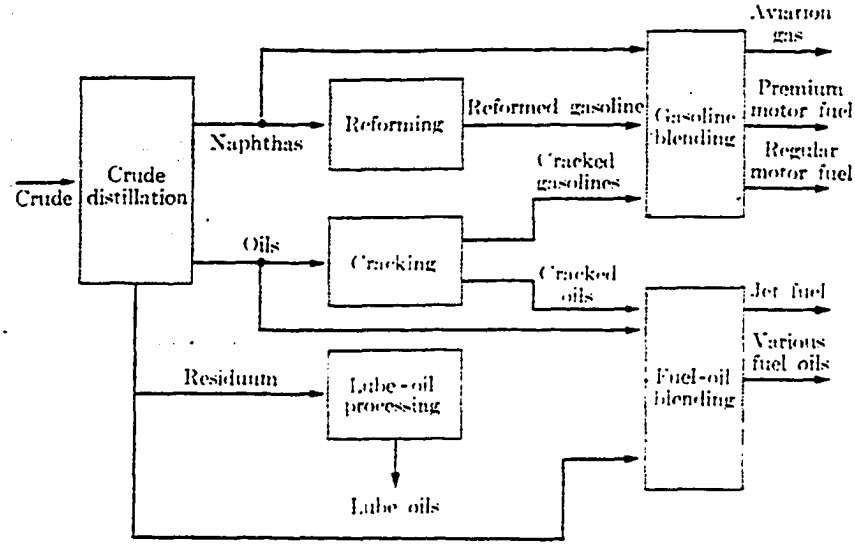

FIGURE III-1

Flow Chart of a Refinery Operation

Source: G. Hadley, Linear Programming (Reading, Massachusetts: Addison-Wesley Publishing Company, Inc., 1962), p. 452.

refiner's objective has been to increase the total yield of the refinery process and, especially, the yields of those products in great demand. Most of the processes discussed above are designed to increase the yields of profitable products from a barrel of crude oil.

The oil refining industry has been known as a research-oriented industry. Refiners have invested heavily in chemical and mechanical research in order to increase the total yield of the refinery process and especially the yields of those products in great demand. Innovations and advancements in refining technology have increased the refiner's control over the mix of end products which might be produced from a barrel of crude oil. Improvement in refining technology was one of the landmarks of the first half of this century.

Several innovations in refinery technology have significantly influenced the refining process. An account of the major innovations and their effect on the industry in general is provided by Enos in his book, Petroleum Progress and Profits.[4] The objective of this discussion is to provide general understanding of the importance of these technological advancements in planning and control aspects of refinery operations.

Innovations and technological advancements in refinery processing have increased the yields of end products with high demand and have given refiners the ability to control their products. The effect of these innovations on the yields

of a barrel of oil is depicted in Table III-1. Schmetz has indicated that the refiner has become a manufacturer rather than a processor:

> The refiner has thus become, through advance in technology, a manufacturer rather than a processor. He is no longer bound irrevocably to the natural fractions provided by the distillation process. Technological advances have given him the ability to alter his production and manufacture new products or convert old products to ones with more utility. If he is a manufacturer, then it should logically follow that much more detailed information is necessary in order for him to choose wisely among his many alternatives, and evaluate and control his operating performance.[5]

Those advancements in oil refining technology along with the new role taken by the refiner, as a manufacturer rather than a processor, have significantly influenced the planning and control process of a refinery. The need for much more detailed information for planning and control purposes has become evident. Refiners have become more interested in searching for models and procedures to help them in planning their operations, choosing among differenet alternatives, and evaluating and controlling their operating performance. This implies the need for more timely information which will help refiners in planning and controlling their operations. Refiners have effectively used the linear programming model to help them solve several practical problems, as discussed in Chapter IV. The search for new tools to facilitate the planning and control process is continued.

TABLE III-1

U.S. AVERAGE PERCENTAGE YIELD OF PETROLEUM PRODUCTS PER BARREL OF CRUDE OIL 1920-1968

Product	1920	1930	1940	1950	1960	1965	1968
Gasoline	26.1	42.1	43.1	43.0	45.2	44.9	44.7
Kerosene	12.7	5.3	5.7	5.6	4.6	6.1	7.7
Gas Oil and Distillates	48.6	8.8	14.1	19.0	22.4	22.9	22.1
Residual Fuel Oil	--	31.5	24.4	20.2	11.2	8.1	7.3
Lubricating Oils	5.7	3.7	2.8	2.5	2.0	1.9	1.7
Other Products	6.9	8.6	9.9	9.7	14.6	16.1	16.5
TOTAL	100.0	100.0	100.0	100.0	100.0	100.0	100.0

Source: American Petroleum Institute Calculations, based on Bureau of Mines Data, as published in Petroleum Facts and Figures (Washington, D.C.: The American Petroleum Institute, May 1971).

Accounting Concepts Underlying Petroleum Refining

In the accounting literature, little has been written about oil refining accounting. Mr. Waters indicates that "the reason for this lies in the fact that refinery accounting is not practiced on definite basis, which is due principally to products manufactured being both co-products and by-products."[6] Accounting Research Study No. 11, published by the American Institute of Certified Public Accountants, did not discuss refinery accounting.[7] The Research Study was limited to prospecting, acquiring, exploring, developing, and producing crude oil and other mineral reserves. The Financial Accounting Standards Board issued Statement No. 19 dealing with financial accounting and reporting by oil and gas producing companies.[8] The FASB Statement, also, was limited to operations related to acquisition, exploration, development and production of gas and oil. The statement specifically says:

> This Statement applies only to oil and gas producing activities; it does not address financial accounting and reporting issues related to the transportation, refining, and marketing of oil and gas.[9]

Generally accepted accounting principles constitute a general framework for refinery accounting. However, the concepts which have affected the industry the most are the going concern concept, the matching principle, the cost principle, and the principle of conservatism.[10] Adherence

to conservatism has led refiners to immediately expense the outlays for research and development and to rapidly depreciate their equipment. These practices have led to distortion of financial data and misleading financial statements.

As in other industries, the historical cost principal has affected the statements of refiners. Adherence to historical cost has led to the matching of previous costs with current revenues. This has led to elusive profits and improper matching of costs and revenues. In addition, the going concern concept has led to the depreciation of assets over longer periods of time and to procedures for capital maintenance and for evaluation of the management stewardship function. Adherence to the matching principle has led to the development of different accounting procedures in order to account for costs and to allocate costs to different products produced. A detailed analysis of the above mentioned accounting principles and their effect on the financial statements of refiners is provided by Schmeltz in his Ph.D. dissertation, "Accounting and Management Control Practices in Petroleum Refining."[11]

Certain steps were exercised in order to eliminate some of the inadequacies in refiners' accounting data. Some of the principles which have dominated for a long time were given less importance and other concepts and principles were gradually emphasized. The objective was to provide more re-

liable data, as was indicated by Schmeltz:

> . . . starting in the late 1950's, substantial progress was made in improving the financial reports relating to refinery operations. The trend was toward making the reports more useful management tools. Concepts of the going concern and of matching costs and revenue have gained in importance since that time. The historical cost concept has not changed, but the decline in the importance of conservatism has helped overcome some of the objections to it.[12]

The Financial Accounting Standards Board has issued Statement No. 2 dealing with accounting for research and development costs.[13] This Statement might have a good effect on refinery accounting with respect to treatment of research and development costs and comparability of financial statements. Also the requirements of the Securities and Exchange Commission that current costs of fixed assets and inventories be disclosed and that current cost of depreciation and materials used be disclosed will help overcome some of the inadequacies of reporting inherent in refinery reports.

Financial Characteristics Of Refining Operations

There are some important characteristics underlying refinery operations which are worth mentioning. Among these are: (1) large amounts of capital expenditures are involved; (2) large investments in inventories; and (3) the existence of joint products. In this section, a brief discussion of these characteristics is presented. The objective is to develop a better understanding of the problems involved.

Capital expenditures. Oil refining involves large amounts of capital investment. The two basic types for capital expenditures are purchases of plant assets and equipment, and payment for research and development. The fact that the industry is capital intensive rather than labor intensive requires better financial information to be furnished to investors. With the fact that refineries are located far away from owners, a better and an effective means of reporting to investors is needed. Management is separated from ownership, in most cases, which requires an effective reporting system to help owners evaluate management performance and policies. To attract capital, refiners should provide financial information as required by the money market.

Large investments in inventories. The large investments in crude oil, semi-processed products, and finished products requires close inventory control in order to secure stock balancing, as Schmeltz points out:

> The physical control of production in a refinery includes metering products at various stages to accumulate production totals. Calculations are verified by periodic tank gauging, taking into account allowance for temperature and the basic sediment and water that accumulates in the tanks. Usually a production statement is prepared daily and summarized monthly as a result of these efforts. . . . accounting for the quantities of all products, received, manufactured, and shipped provides an important link in internal auditing controls. It also provides information on the value and quantities of crude oil consumed in the refining process.[14]

Inventory control is of utmost importance for refiners because crude oil or its equivalent constitutes most of the

total cost of all refinery products. Fox, in 1949, stated that "raw crude cost constitutes from 75 to 85 percent of the total cost of all refinery products."[15] The percentages have not changed much since then. In 1964, once again Fox indicated that "crude or its equivalent constitutes from 70 to 90 percent of the total cost of all refinery products, depending on the complexity of the refinery."[16] With the current increase in crude oil prices, crude oil or its equivalent still constitutes the largest part of the total cost of all refinery products.

Inventory controls in a refinery generally include the following: (1) physical control of petroleum products from the time crude oil and unfinished distillates enter the refinery until finished products emerge and are shipped; (2) preparation of the production statement; and (3) compilation of production statistics to evaluate technical performance of processing units and to provide additional control over physical quantities.[17]

Joint products. The existence of joint products is the most important feature of the oil refining accounting. The costs incurred to process joint products up to the separation point have to be assigned to revenue from those products. Different methods for the allocation of product costs in refinery accounting have been developed. Among these methods are: (1) realization method which assumes that all products refined from crude oil are joint products and

that each yields the same rate of profit; (2) by-products method which assumes that all refinery activities are directed toward the manufacture of one principal product, with all other products supplementary to its production; (3) replacement value method which assumes that motor gasoline is the most important refinery product manufactured and that its cost should be determined as independently as possible of the many other products' costs; (4) barrel-gravity method which uses the specific gravities of the products refined as weights to assign cost in the same way as current prices are used in the sales realization method.[18] Another allocation method, developed by Professor Feller, is the volume-oriented joint cost allocation.[19]

Therefore, the existence of joint products is one of the most important characteristics of petroleum refinery operations. How to account for those products?, how to allocate costs among those products?, and how to report on those products? are very important questions for the cost accounting department in a refinery.

The Future of Planning and Control In Refinery Operations

Planning and control aspects of oil refining operations will be affected by technological advancements both in the refining process and in computing techniques. Advancements in refining technology have added greater

flexibility to the refining process, and hence have increased the number of decisions to be made concerning planning and controlling refinery operations. On the other hand, advancements in computing techniques have given refiners an ample chance to benefit from different short- and long-run planning models and to improve their information gathering and reporting techniques. These advancements are expected to have a notable favorable effect on the planning and control aspects of a refinery. The following discussion points out the areas which are gaining importance and are expected to influence to a great extent the future of planning and control in refinery operations.

Manufacturing rather than Processing. Technological advancements and innovations in the first half of the current century have given the refiner more actual control over the end products which might be obtained from a barrel of crude oil. This situation has raised the question whether the refiner should be considered a processor who is faced with limited or specific result known in advance or a manufacturer who is faced with several courses of action and can select from different alternatives. Most of the writings in refinery accounting support the second proposition. Schmeltz states:

> All of this evidence . . . the historical evolution of refining; the recent and rapid increase in refining technology; the documented trends in capital investment, employment, production, and value added by manufacturing;

> the increased importance of modernization and automation; the trend towards the further processing of intermediate products and processing innovations . . . supports the hypothesis that refining has become a manufacturing rather than a processing activity.[20]

Advocating the same idea, Professor Feller had concluded that:

> . . . regardless of the accounting methods used, one must bear in mind that refining, once exclusively a processing operation, has become a manufacturing activity with all that attendant cost-accounting and management-information requirements.[21]

Therefore, the cost accounting department in a refinery should provide refiners with useful information to help them in balancing inventories, controlling operating expenses, allocating costs, costing products, and most important, evaluating different courses of action and selecting among alternatives. This implies the need for more reliable information to improve planning and control refinery operations. Therefore, modeling refinery operations and extensive applications of different planning models to solve refining problems will become more important.

Broader Objective of Refinery Cost Accounting: The objective of a cost accounting department within the refinery should be to provide useful factual information relating to all aspects of refinery operations. The cost accounting department, in addition to its conventional role, should help in assisting management with information required for decision-making, different analyses, and evaluation of alternatives. This new look at the responsibilities of the cost department

in a refinery will serve better the needs of investors, management, and the society, as was concluded by Schmeltz:

> Many departments do not accept this broad a statement of their responsibilities and are content to account for material, labor, and overhead costs; and to establish the inventory values that are required for the preparation of financial statements. If a department accepts this limited point of view, it assumes three basic responsibilities: (1) to account physically for all products received, manufactured, and shipped; (2) to account for operating expenses and to allocate these as accurately as possible to the manufacturing processes, service units, and end products; (3) to choose a product costing method to provide data for inventory purposes. If the department assumes a broader level of responsibility, it adds to these three objectives a fourth which is to furnish management with additional meaningful information for evaluating and controlling the operations of the refinery.[22]

It is the broader concept of responsibility which will dominate the work of the cost department in a refinery. This implies increasing involvement in planning and controlling refinery operations. This new role requires more attention to be directed towards modeling refinery operations applying planning models, and providing useful information for decision-making.

Computer Applications: Looking at the refiner as a manufacturer who selects among different courses of action will require more useful information to be provided when needed. The availability of computers and different mathematical programs has had a favorable impact on the quality of information gathered and has helped the refiners in evaluating the impact of different alternatives and courses of action. Through the use of computers, the management of a

modern refinery can obtain timely answers to different planning questions and can effect a more precise evaluation of different alternatives.

Computers have been applied successfully in planning and controlling refinery operations. Computer applications to refinery planning and control have been one of the basic developments in the last two decades. With the new developments in computers, successful applications and increasing utilization of computer capabilities will better serve the refining planning and control process.

The refining industry has developed several computer techniques for the purposes of planning and control of refinery operations. In the following discussion, some examples of successful computer applications are presented.

Continental has applied a computer technique for refinery planning and control.[23] The computer technique developed by Continental includes: (1) refinery simulation program which calculates product yields, product properties cost data for any combination of feedstocks and refinery operations conditions; (2) an optimization program which studies the alternatives and selects an optimum plan for the refinery; (3) yield-accounting program which provides the refinery management with data necessary for effective plant control by daily comparison of actual with optimum budgeted operation. The yield-accounting program also provides high-quality data as feedback to the simulation and optimization functions. Commenting on Continental's successful experience with computers, Mr. Withey states:

> We at Continental feel that the computer has a place in refinery planning and control because of the mass of information which must be handled, the complexity of the logic which must be applied, and the repetitive nature of the work. We believe that the economic significance of the decisions to be made can justify the time, effort, and cost of seeking a more nearly optimum solution to the refinery planning and control problem.[24]

Another refinery-simulation procedure was developed by Standard Oil Company of California.[25] The procedure was found to be of value for planning studies for existing refineries, processing studies for individual plants, selection of new facilities, and integration into existing refineries.

A very recent application has been undertaken by Gulf Oil Canada Ltd. in 1978.[26] Gulf Oil Canada has developed a new refinery computer technique which is expected to produce big payout. The computer system is designed, by Gulf Oil Canada, to: (1) improve planning, scheduling, and cost accounting; (2) to maximize production of the most valuable products within constraints imposed by product specifications; (3) to improve efficiency of fuel and steam usage; and (4) to maximize recovery of heat to crude and reduce furnace fuel consumption. The system has two parts: (1) the refinery information system; and (2) the supervisory control package. This system provides valuable information for operating, planning, and controlling the refinery activities. Projected costs and benefits promises Gulf Oil Canada a high rate of return.

Refinery accounting should continue to benefit from

computers. Computers will give the cost accounting department more ability to apply different mathematical programs and to produce more reliable information on a timely basis. Refiners can expect more benefits from computers applications as it was disclosed by Farrar:

> Refiners can expect substantial profit or cost savings in many instances from proper application of computer process control. That's the conclusion reached in a survey of companies using this new, sophisticated control technique.[27]

In general, and as explained above, the three characteristics which mark the future of planning and control in refinery operations are: (1) Manufacturing rather than processing; (2) Broader objective of refinery cost accounting; and (3) Computer applications.

FOOTNOTES TO CHAPTER III

[1]S. K. Waters, "Oil Refinery Accounting," The National Association of Cost Accountants Bulletin, Vol. XXIV, No. 1 (September 1, 1942), pp. 3-4.

[2]J. L. Fox, "Cost Analysis Budget to Evaluate Operating Alternatives for Oil Refiners," The National Association of Cost Accountants Bulletin (December 1949), pp. 403-404.

[3]W. F. Schmeltz, Accounting and Management Control Practices in Petroleum Refining, unpublished Doctor's Dissertation, Western Reserve University, 1966, pp. 251-254.

[4]J. L. Enos, Petroleum Progress and Profits (Cambridge, Massachusetts: The MIT Press, 1962), pp. 1-262.

[5]Schmeltz, op. cit., pp. 7-8.

[6]Waters, op. cit., p. 3.

[7]R. E. Field, Financial Reporting in Extractive Industries. Accounting Research Study No. 11. The American Institute of Certified Public Accountants. New York, 1969.

[8]Financial Accounting Standards Board, Financial Accounting and Reporting by Oil and Gas Producing Companies, Statement of Financial Accounting Standards No. 19. Stamford, Connecticut (December 1977).

[9]Ibid., p. 2.

[10]See Schmeltz, op. cit., pp. 42-45.

[11]Ibid., p. 44.

[12]Ibid., p. 45.

[13]Financial Accounting Standards Board, Accounting for Research and Development Costs, Statement of Financial Accounting Standards No. 2, Stambord, Connecticut (October 1974).

[14]Schmeltz, op. cit., pp. 35 and 38.

[15]Fox, op. cit., p. 405.

[16]J. L. Fox, "Accounting for Petroleum Refiners," The Price Waterhouse Review, IX, No. 2 (Summer 1964), pp. 42-43.

[17]Ibid., pp. 45-46.

[18]For more details about these methods the reader might refer to: C. H. Griffin, "Multiple Products Costing in Petroleum Refining," The Journal of Accountancy, March 1958.

[19]R. E. Feller, "Accounting for Joint Products in the Petroleum Industry," Management Accounting, September 1977.

[20]Schmeltz, op. cit., pp. 31-32.

[21]Feller, op. cit., p. 42.

[22]Schmeltz, op. cit., p. 35.

[23]J. V. Withey, "Computer Techniques for Refinery Planning and Control," The Oil and Gas Journal, January 20, 1964.

[24]Ibid., p. 76.

[25]W. A. Raatz and R. A. Spellmann, "Refinery-Simulation Procedure for Operations Planning," The Oil and Gas Journal, July 2, 1962.

[26]G. R. McClean, "New Refinery Computer to Produce Big Payout," The Oil and Gas Journal, January 30, 1978.

[27]G. L. Farrar, "How Refiners Size up Process Control by Computers," The Oil and Gas Journal, April 29, 1963.

CHAPTER IV

LINEAR PROGRAMMING APPLICATIONS IN REFINING OPERATIONS

During the early days of oil refining, all refining was done in batch processes. Crude oil was placed into large vats and its temperature was gradually increased by applying heat either from fire or high pressure steam. Lower boiling fractions were vaporized first and then condensed. The process was continued until all of the desired products were obtained. The vats had to be cleaned after each batch and the residue was usually burned or dumped. The process was very simple. The cost of each batch was accounted for separately and then allocated to the resulting final products.

Several innovations in technology have transformed refining into a production process. Today, refining takes place on a continuous basis in a fractionating tower. Refiners have limited control over the combination of end products and thus the yields of the various products from each barrel of crude. Modern refining processes are more efficient and require product mix decisions.

Refiners must deal with a variety of very important

planning and control issues ranging from the location of crude inputs to the final distribution of end products. Among these problems are: (1) crude oil allocation problems; (2) blending problems; (3) running plan problems; and (4) transportation problems. Refiners have developed various solutions to these problems.

The application of mathematical models to help solve refinery related problems started in the early 1950's. The development of computers and computing techniques made such application economically feasible. As a result, linear models have been applied to a variety of problem areas concerning oil refining. In essence, linear programming has been the most widely used technique in solving refiners' problems. Symonds (1955),[1] and Manne (1956)[2] have outlined oil refining problem areas for which linear programming has provided practical solutions.

The following analysis provides an overview of the application of linear models to refinery planning and control. In particular, for each of the aforementioned problems, we briefly point out the problem area, state the objective, outline the model to be used, and describe the outputs of the model.

The Crude Oil Allocation Problem

The crude oil allocation problem involves the assignment of crude oils among the various refineries of a multiplant firm. Different crude oils with different viscosity

and gravity numbers at different locations might be available for the firm. The multiplant firm must decide on an allocation scheme which indicates the quantities of different crudes to be routed to each refinery.

The objective, in this case, is for the firm to assign the different crudes available to its various refineries in a more profitable way. This objective is measured in terms of the company's net realization per barrel of the ith crude oil at the jth refinery.

The company's net realization per barrel of the ith crude oil at the jth refinery is determined by crediting the yield of each product with its refinery gate realization, debiting each product for the manufacturing expenses associated with it, and also debiting the costs of producing, transporting, and distilling one barrel of the crude.

To apply the linear programming model, the firm must specify the objective function and the operating constraints. Let P_{ij} represent the company's net realization per barrel of the ith crude at the jth refinery; Q_i represents the total daily quantities available of the ith crude; and D_j represents the distillation capacity limits of the jth refinery, the problem can be reduced to the following linear programming form:

$$\text{Maximize} \qquad \sum_{ij} P_{ij} X_{ij},$$

$$\text{Subject to} \qquad \Sigma_j X_{ij} \leq Q_i \quad (i = 1,2,\ldots n),$$

$$\sum_i X_{ij} \leq D_j \quad (j = 1,2,\ldots m),$$

$$X_{ij} \geq 0 \quad (\text{all } i \text{ and } j),$$

where

X_{ij} = indicates the quantity of the ith crude which should be shipped to the jth refinery.

n = the number of crudes available, and

m = the number of refiners.

Solving the above model provides the multiplant firm with the assignment scheme which maximizes its overall realization value for the constraints specified. The solution to the above model is in the form of a rectangular matrix which includes quantities of different crude oils to be routed to different refineries. The optimal solution is of the form:

$$\bar{X}^* = \begin{bmatrix} X_{11} & X_{12} & \cdot & \cdot & \cdot & X_{1m} \\ X_{21} & X_{22} & \cdot & \cdot & \cdot & X_{2m} \\ \cdot & \cdot & \cdot & \cdot & \cdot & \cdot \\ \cdot & \cdot & \cdot & \cdot & \cdot & \cdot \\ \cdot & \cdot & \cdot & \cdot & \cdot & \cdot \\ X_{n1} & X_{n2} & \cdot & \cdot & \cdot & X_{nm} \end{bmatrix}$$

An important constraint which is always included in crude oil allocation problems pertains to the capability of

different refineries to process corrosive oils. Some refineries are equipped with special facilities for processing highly corrosive oils while other refineries may tolerate only a certain maximum degree of hydrogen sulfide. Therefore, constraints pertaining to the physical and chemical composition of different crude oils must be included in actual crude oil allocation problems. This will insure that each refinery will receive maximum quantities from different crude oils subject to its capability in handling the hydrogen sulfide. Other constraints pertaining to the yields of different products in different refineries are always considered in such problems.

Crude allocation problems actually require a more complex model which incorporates all of the constraints discussed above. However, these constraints are omitted in the above analysis just to simplify the illustration.

Next we turn to another problem which is of utmost importance to refiners. This is the blending problem, where the refiner must decide on the different streams to be blended and the different products to be developed from the blending process. Blending problems represent another case in which linear programming has provided the refiner with practical solutions.

The Blending Problem

Blending activities represent very important part of the refining process, as Hadley explains:

> Gasoline blending is a very important problem because a small percentage improvement in operations could mean millions of dollars to the oil companies. Many of the larger oil companies have been using linear programming for some time to solve their blending problems. Some have claimed that substantive amounts of money were saved by means of linear programming.[3]

Blending problems in refining involve both gasoline blending and fuel oil blending. Linear programming has been widely used in these areas and was proved to be significantly effective, as Hadley points out:

> Linear programming forms a natural technique for optimizing blending operations provided that the various quantities of interest blend linearly. It is by no means true that all physical quantities blend linearly, and hence if linear programming is applied in a case of nonlinear blending, it will yield only an approximate answer. In many instances, however, the assumption of linearity has given answers which were good enough to make linear programming a very useful tool for studying blending operations.[4]

Gasoline blending problems can lead to a very large linear programming problem. In one oil company the number of constraints involved in a blending problem reached eighty constraints.[5]

Blending activities in a refinery include both gasoline blending and fuel oil blending. Although the blending problem formulation is the same in each case, a brief discussion of both problems is presented to see how they are solved using linear programming techniques.

Gasoline blending. Gasoline blending problems involve the blending of different refinery streams to produce regular gasoline, premium gasoline, and aviation gasoline.

The refinery has to blend different streams including naphtha, reformed gasoline, and cracked gasoline in a complex process in order to satisfy the final demand for its regular, premium, and aviation gasolines. The blending process is performed under certain specifications and subject to constraints.

The objective is to increase the company's total profit from sales of different gasolines. The profit per barrel of final output is different from one gasoline blend to another. However, the quantities that can be produced and that can be sold from each kind are also specified. Therefore, it is very important for the company to decide on the production mix that would increase its total profit under the given circumstances.

Let us assume that three different refinery streams, X, Y, and Z, are blended into regular (R), premium (P), and aviation (A) gasolines. The daily available quantities of the three streams are Q_X, Q_Y, and Q_Z, respectively. For simplicity, we assume that for each gasoline, there is only a single octane requirement to be satisfied. It is required that regular, premium, and aviation gasoline have octane numbers of at least M^r, M^p, and M^a, respectively. Let M^x, M^y, and M^z be the octane numbers of the three refinery streams.

Let X_R, X_P, and X_A denote the daily quantities of stream X blended into regular, premium, and aviation gasolines, respectively. Similarly, Y_R, Y_P and Y_A will denote the

quantities of stream Y, and Z_R, Z_P, and Z_A will denote the quantities of stream Z blended into regular, premium, and aviation gasolines, respectively.

The objective function is of the form:

$$\text{Maximize} \quad \pi = C_r (X_R + Y_R + Z_R) + C_p (X_P + Y_P + Z_P) + C_a (X_A + Y_A + Z_A),$$

where

C_r, C_p, and C_a represent the contribution margin per barrel of regular, premium, and aviation gasolines, respectively.

The objective function will be maximized subject to a set of constraints. Quantity constraints, in this case, will read as follows:

$$X_R + X_P + X_A \leq Q_X$$

$$Y_R + Y_P + Y_A \leq Q_A$$

$$Z_R + Z_P + Z_A \leq Q_Z$$

The octane constraints for regular, premium, and aviation gasolines, respectively, will read as follows:

$$(M^r - M^x) X_R + (M^r - M^y) Y_R + (M^r - M^z) Z_R \leq 0$$

$$(M^p - M^x) X_P + (M^p - M^y) Y_P + (M^p - M^z) Z_P \leq 0$$

$$(M^a - M^X)\ X_A + (M^a - M^Y)\ Y_A + (M^a - M^Z)\ Z_A \leq 0$$

In addition to octane requirements on gasoline, there may be some constraints related to production specifications. A typical specification constraint requires that the premium gasoline produced be a given fraction (λ) of the output of regular gasoline. This constraint has the following form:

$$X_p + Y_p + Z_p - \lambda X_R - \lambda Y_R - \lambda Z_R = 0.$$

Constraints related to demand for different gasolines may also be incorporated. If the total demand for regular, premium, and aviation gasolines are D_R, D_P, and D_A, respectively, demand constraints will read as follows:

$$X_R + Y_R + Z_R \leq D_R$$

$$X_P + Y_P + Z_P \leq D_P$$

$$X_A + Y_A + Z_A \leq D_A$$

Solution to the linear programming problem, outlined above, is obtained using the simplex method. The solution to this blending problem will provide the optimum quantities of different gasolines which should be produced in order to increase total profit. The output obtained from the model will read as follows:

	From Stream X	From Stream Y	From Stream Z	Total To Be Produced
Regular Gasoline	X_R	Y_R	Z_R	--
Premium Gasoline	X_P	Y_P	Z_P	--
Aviation Gasoline	X_A	Y_A	Z_A	--

Fuel oil blending. Fuel oil blending problems also involve a very complex setting. The objective in fuel oil blending is to increase profits by blending different streams in order to produce products with higher revenue. Constraints pertaining to availabilities of raw stocks, production specifications, gravity, and viscosity are all incorporated in the model.

A fuel oil blending problem is formulated for solution in a linear programming context in the same way as the gasoline blending problem is formulated. The objective function will be to maximize profits from various fuel oils subject to constraints related to quantities of primary stocks, production specifications, gravity and viscosity numbers, and the quantities demanded. The solution will provide the refinery's management with the optimal quantities of various fuel oils to be produced. This optimal solution will provide for the maximum profit scheme that can be attained under the given circumstances.

Seasonal demand for different products affects the

blending process. More fuel oil is produced during winter time while more gasoline is produced during summer time. In addition, the government may intervene and order some change in the production mix as was demonstrated by the U.S. government action in 1973. The U.S. government, in 1973, ordered the industry to cut back production of gasoline and increase production of fuel oil. Constraints pertaining to seasonal demand or government actions which affect the production mix must be included in the blending problems.

A third problem which we discuss next represents another successful application of linear programming. This problem represents the development of a running plan for a refinery. A running plan for a refinery sets the production strategy to be used by the refinery in order to satisfy the demand for its final products. It helps the refinery's management select the combination of crude oils to be used in producing its final products.

The Running Plan Problem

Symonds argues that plans that will assure maximum running profit can be prepared by the simplex method of linear programming.[6] A running plan for a refinery involves the combination of crude oils to be used in order to satisfy final demand for the refinery products. Here, the refinery is faced with an outside demand for its final products that should be satisfied. On the other hand, there are several

crude oils available for the refinery which can be used to produce that final demand. The refinery's management is to decide on the combination of crude oils to be used which will increase the overall profits.

The objective is to make a selection of crude oils which will meet production requirements with maximum possible profit. The simplex method of linear programming is effectively used to set up this kind of problem for solution.

Let us assume that a refinery has five crude oils available in stated quantities and wishes to meet the requirements for four different products. Crude oils are available in daily quantities of Q_i, (for i = 1.....5). Daily demand for the refinery products is D_j, (for j = 1...4). The yields for each crude are expressed in decimal fractions as λ_{ij}, which represents the percentage of product j obtained from a barrel of oil from crude i. We further assume that X_i represents the daily amount of crude i used in production, and P_i represents the profit obtained from processing one barrel from crude i.

Using the linear programming technique, the above problem is set up for solution in the following form:

$$\text{Maximize} \quad \pi = \sum_{i=1}^{5} P_i X_i$$

$$\text{Subject to:} \quad X_i \leq Q_i, \text{ for } i = 1....5.$$

$$\sum_{i=1}^{5} \lambda_{ij} X_{ij} \leq D_j, \text{ for } j = 1....4.$$

$$X_i \geq 0, \text{ for } i = 1....5.$$

$$D_j \geq 0, \text{ for } j = 1....4.$$

$$Q_i \geq 0, \text{ for } i = 1....5.$$

Using the simplex method to solve the linear programming problem, the refinery's management can find the optimal solution which will maximize the total profits for the constraints specified. The optimal solution, in this case, will consist of a vector of quantities from different crude oils which should be used in production:

$X_i^* = [X_i, X_2, ..., X_5]$, where

X_i = the quantity of crude i used in production.

The last problem considered in this brief discussion concerns the transfer of final outputs from different refineries to different distribution points. It is known as a transportation problem. Linear programming has provided the refiners with economical and practical solutions for this class of problems.

The Distribution Transportation Problem

Transportation problems are generally concerned with minimizing total transportation costs for the entity. For a multiplant firm which operates more than one refinery at different locations, the transportation problem involves

transferring the required quantities of final products from different supply points (refineries) to different destinations (distribution points) at a minimum cost. In this case, refiners are concerned with transferring final products from different refineries to different distribution outlets, while in a crude oil allocation problem the cost of transferring crude oils to different refineries is treated as an element in calculating the net realization per barrel of crude oil. It is in this sense that a transportation problem is different from a crude oil allocation problem.

The linear programming model, in this case, is developed in the following manner:

Define X_j = quantity available at the jth supply point (refinery),

Y_i = quantity required at the i_{th} destination,

A_{ij} = quantity transferred from refinery j to destination i, and

C_{ij} = the cost of transferring one unit from j to i.

The objective function is:

$$\text{Mininize cost} = \sum_i \sum_j C_{ij} A_{ij}.$$

The constraints are:

$$\sum_j A_{ij} = Y_i, \quad i = 1...m$$

$$\sum_i A_{ij} = X_j, \quad j = 1....n$$

and

$$A_{ij} \geq 0.$$

The solution to this problem is obtained using the simplex method. The solution would provide the multiplant firm with quantities to be transferred from different refineries to different destinations. This scheme would provide for the needs of different destinations at a minimum cost. The output from the model is of the form:

$$A^*_{ij} = \begin{bmatrix} A_{11} & A_{12} & \cdots & A_{1n} \\ A_{21} & A_{22} & \cdots & A_{2n} \\ \cdot & \cdot & \cdots & \cdot \\ \cdot & \cdot & \cdots & \cdot \\ \cdot & \cdot & \cdots & \cdot \\ A_{m1} & A_{m2} & \cdots & A_{mn} \end{bmatrix}$$

Notice that all of the above models are integrated together to optimize the performance of a refinery. All of the above models contribute to the general objective of any operating refinery which is to increase profits and reduce costs. These activities are compatible and optimization in any single activity is not implemented at the expense of other activities.

The problems considered above represent some ways in

which linear programming has been used to solve refinery problems. Although these problems represent important application areas, linear programming has been used to solve several other problems which are faced by refiners. Next, some specific applications of linear programming by different oil companies will be discussed.

Other Applications of Linear Programming

Standard Oil Company of California has incorporated linear programming into its refinery simulation program. Linear programming was used to indicate the feasible solutions without optimizing. Raatz and Spellman, explaining the model, have stated:

> Gasoline blending is an area which challenges the ability of many planners. Linear programming is a widely used procedure for optimizing gasoline blends. However, for this simulation procedure, a motor-gasoline blending module was developed, based on linear programming, primarily to consistently achieve feasible blends rather than to attempt an optimal answer.[7]

The refinery simulation program has successfully helped planning studies for existing refineries, processing studies for individual plants, selection of new facilities and integration into existing refineries. Pointing some of the advantages of the program, Raatz and Spellman further observe that:

> A great advantage of the simulation procedure is its ability to efficiently explore many refinery plans pivoting around a base case. This is an important attribute of a nonoptimizing simulation procedure. Normal use involves calculation of several cases to develop a final plan for, say, selecting the optimal size of a new plant.[8]

Continental has incorporated the linear programming model into a refinery simulation program. The company's optimizer program is to evaluate different alternatives submitted by the refinery simulator and select the optimum plan. The results are incorporated into a general operating plan as Withey, in his article, explains:

> Optimized case studies provide economic information to the crude oil supply, marketing, transportation, and manufacturing organizations. In addition, an optimum operating scheme is prepared for the refinery each month. A 12-month refinery operating plan is obtained using standard linear-programming techniques. This year-around operation must be broken down into 12 separate monthly periods to be an effective planning and control tool.[9]

Thus far, specific applications of linear programming in refinery operations have been reviewed. The above analysis has indicated the extent to which linear programming has been used to solve specific refining problems. Next, input-output analysis is briefly discussed to indicate how this form of analysis can be used in planning and controlling refinery operations.

Applications of Input-Output Analysis To Refinery Operations

Input-output analysis, as far as the writer is aware of, has not been applied to planning and control of refinery operations. Refinery operations may be subjected to the linearity assumption, as explained above, and this increases the likelihood that input-output analysis may prove to be a valuable planning technique for refiners.

Input-output analysis describes and analyzes the flow of production between different processes. If the interactions among different processes can be explained using an input-output framework, then input-output techniques can be used to develop valuable operating plans.

Applications of input-output analysis have been suggested by noted scholars as an effective means of planning and controlling process activities. It is expected that input-output analysis can well contribute to the solution of several problems which face refiners. Among these problems is that of developing a general operating plan for the refinery.

Input-output analysis is expected to influence the process of planning and controlling refinery operations by providing valuable information that can be used by refiners in making their decisions. The analysis is advocated as a planning model that can be used in different areas. Among these areas are: (1) planning production levels; (2) planning production requirements; (3) planning inventory levels; (4) planning sales mix; (5) developing operating budgets; and (6) generating total debit and credit entries. However, in this research, application of input-output analysis into two specific planning areas is considered. In addition, the study examines the extent to which refinery operations can be subjected to an input-output framework.

First, it is expected that input-output analysis can be used to provide the refiner with estimates of production

levels that correspond to different levels of final demand. Using production relationships within the refinery, the refiner is able to determine production volumes corresponding to final demand estimates.

Second, input-output analysis can be further used to develop estimates of total production requirements for different levels of production. This, in turn, can be used to develop general operating plans for the refinery.

It is expected that these new applications, and the valuable information to be provided by the micro input-output model, can make significant contributions to the development of an effective planning and controlling measures of refinery operations.

Input-output analysis, as considered in this study, is by no means advocated as a substitute for the linear programming model. Linear programming will continue to provide refiners with practical solutions for the problems discussed above. Both techniques provide solutions to different planning problems, and hence should be complementary to each other. It is expected that the use of input-output analysis will contribute to the solution of refining problems which have not been modeled before.

FOOTNOTES TO CHAPTER IV

[1]G. H. Symonds, Linear Programming the Solution of Refinery Problems (New York: ESSO Standard Oil Company, 1955).

[2]A. S. Manne, Scheduling of Petroleum Refining Operations (Cambridge, Massachusetts: Harvard University Press, 1956).

[3]G. Hadley, Linear Programming (Reading, Massachusetts: Addison-Wesley Publishing Company, Inc., 1962), p. 459.

[4]Ibid., p. 459.

[5]Ibid., p. 459.

[6]Symonds, op. cit., p. 12.

[7]W. A. Raatz and R. A. Spellmann, "Refinery-Simulation Procedure for Operations Planning," The Oil and Gas Journal (July 2, 1962), p. 110.

[8]Ibid., p. 111.

[9]J. V. Withey, "Computer Techniques for Refinery Planning and Control," The Oil and Gas Journal (January 20, 1964), p. 80.

CHAPTER V

FORMULATION OF THE INPUT-OUTPUT MODEL

This chapter includes a description of the refining process being modeled, the means by which the input-output coefficients were derived, the input-output relationships of the refinery being studied, and the ways in which the model can be used. An evaluation of the validity of the input-output representation of the underlying refining process is presented in Chapter VI.

The Refining System Being Modeled

Production takes place through different successive processes. In describing the refining process, reference is being made to the refinery simplified flow diagram which is presented in Figure V-1. In addition, production relationships among different processes within the refinery are further explained in Figure V-2. Seven basic processes are identified according to significant stages thoughout the refining system. The following is a general description of the basic processes and interprocess relationships.

Process I: Crude distillation. The production process in the refinery starts with crude distillation (refer to

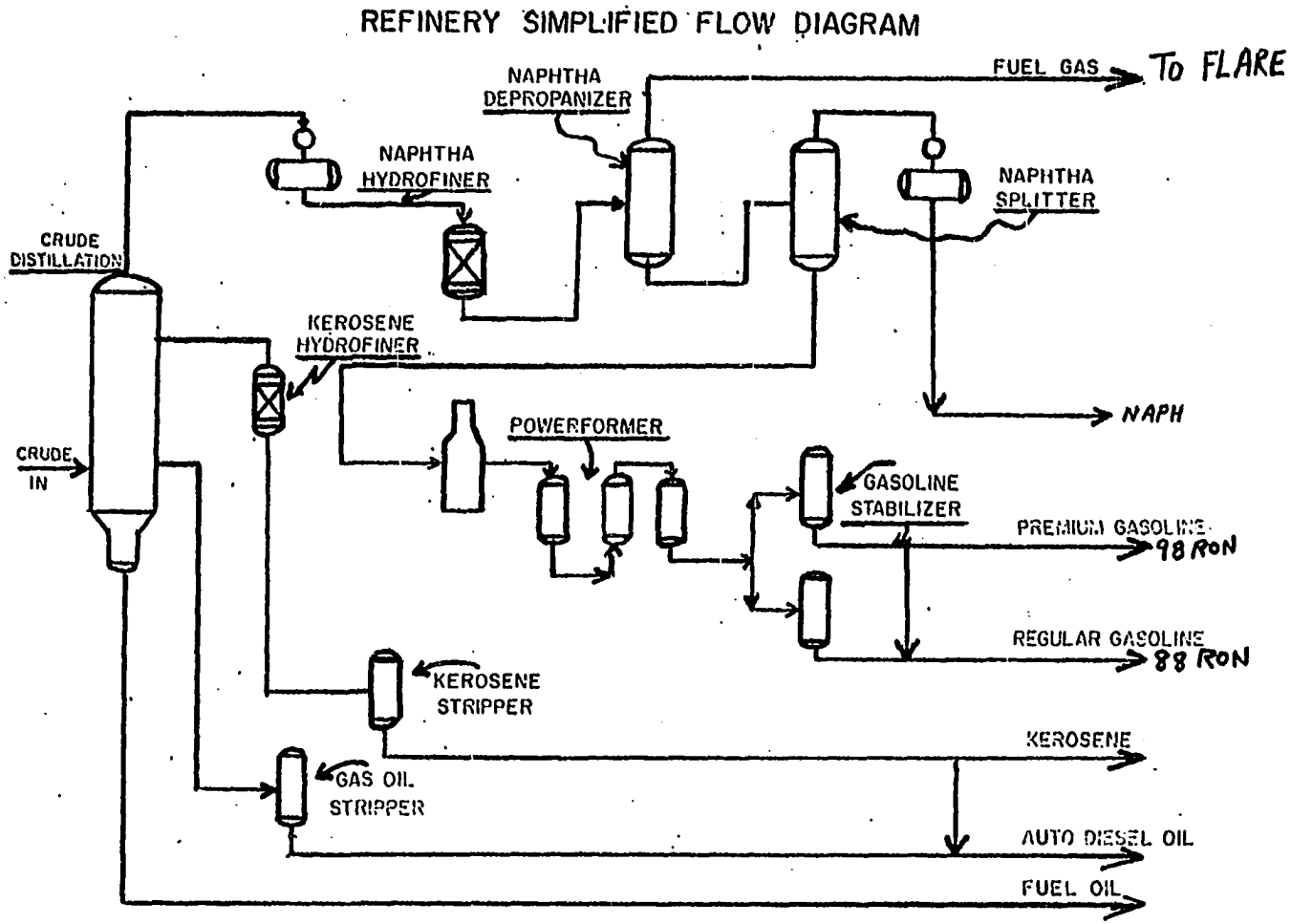

FIGURE V-1

Source: This diagram was prepared by refining engineers and released to the writer by the refinery's superintendent.

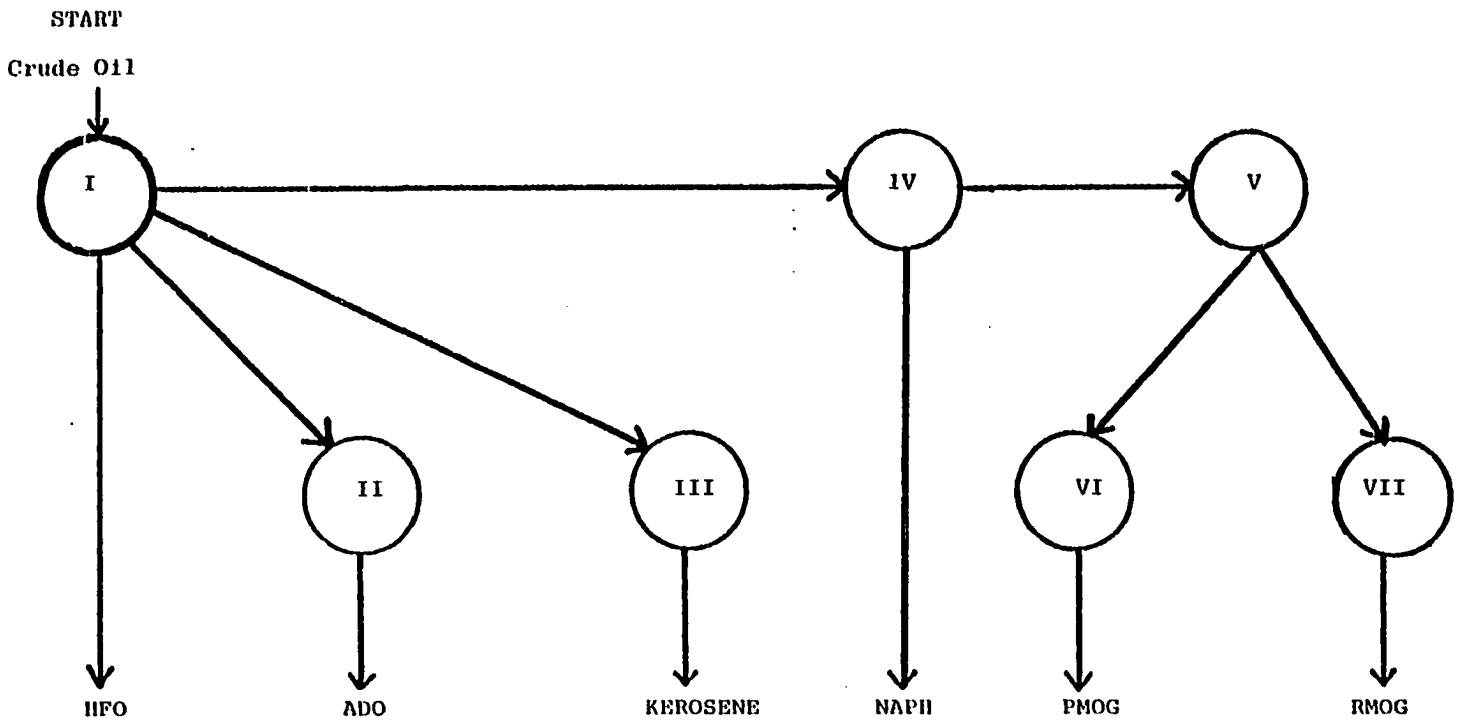

FIGURE V-3*

Production Relationships Within The Refinery

*This figure was prepared by the writer based on the analysis of interprocess relationships.

Figure V-1). In this process, crude oil is received and is separated by the process of applying high heat temperatures through a wide range. Because of heat, crude oil is separated into naphtha, kerosene, auto diesel oil and heavy fuel oil. The heavy fuel oil (HFO) is considered the final product of this process because no further processing is performed on the HFO. However, the naphtha, kerosene, and auto diesel oil are transferred into other processes. This process is represented by Process I of Figure V-2.

Process II: Treating the auto diesel oil. This process receives the auto diesel oil (ADO) from Process I in the form of gases. These gases are condensed in the gas oil stripper, washed, and treated to produce the ADO in its final form. This process is represented by Process II of Figure V-2.

Process III: Treating kerosene. In this process, kerosene (KEROS) is received from Process I in the form of gases. The KEROS is further processed through the kerosene hydrofiner and the kerosene stripper. The gases are transformed to liquid which is washed and further treated to produce the KEROS in its final form. This process is represented by Process II of Figure V-2.

Notice that Processes II and III both provide outputs for final demand only. Outputs of these processes are not inputs for other processes within the refinery. This is to say that internal demand for the products of Processes II and

III does not exist.

Process IV: Naphtha reforming. This process receives naphtha (NAPH) from Process I in the form of gases. The naphtha is processed through naphtha hydrofiners, naphtha depropanizers, and naphtha splitters. In this process, part of the gases is condensed into liquid and treated to produce naphtha in its final form (NAPH) to meet final demand. The other part (reformed gasoline) is sent to Process V. This process is referred to as Process IV on Figure V-2. Notice that Process IV provides final output to meet outside demand and it also provides inputs to Process V. Also notice that fuel gases are driven out of the naphtha depropanizer (refer to Figure V-1). These fuel gases are sent out to flare and that is why in building the model, as is explained later, production losses are assumed to occur in Process IV.

Process V: Gasoline blending. This process provides inputs for Processes VI and VII only and does not produce for outsiders. That is why the outside demand for its product is zero. In Process V the reformed gasoline received from Process IV is cycled through reheat furnaces to subject it to higher temperatures. Then it is introduced to powerformer reactors with different heat temperatures (refer to Figure V-1). In this process the gasoline is split into two streams representing low octane and high octane. The high octane stream is transferred into Process VI and the low octane stream is sent to Process VII. This process is referred to in Figure V-2 as Process V.

Process VI: Premium gasoline treatment. This process receives high octane gasolines from Process V in the form of gases. These gases are cycled through gasoline stabilizers (refer to Figure V-1) and condensed into liquid form. The liquid is washed, treated, and raised to the required octane number. Lead is added in this process as needed. The output from this process is premium gasoline, referred to in the refinery as premium mogas (PMOG). This process is represented by Process VI of Figure V-2.

Process VII: Regular gasoline treatment. Inputs to this process are received from Process V in the form of gases. The low octane gasolines as received from Process V are cycled through gasoline stabilizers and condensed into liquid form. The liquid is washed, treated, and raised to the desired octane number for regular gasoline. Lead is added in this process as needed. The output from this process is regular gasoline, referred to in the refinery as regular mogas (RMOG). This process is referred to as Process VII in Figure V-2.

The basic processes, as explained above, will be identified by their Roman numerals throughout this study. This identification is used for simple and quick reference.

The above description and analysis of the refining system was presented based on the information obtained from the refinery's superintendent and a review of previous

studies in similar situations. In addition to the simplified flow diagram which is presented in Figure V-1 above, the writer reviewed with the superintendent a more complex diagram which includes detailed analysis of production relationships. Moreover, the writer reviewed the ideas pertaining to modeling refinery operations which were developed by Manne and other authorities. Manne has explained in his article, "A Linear Programming Model of the U.S. Petroleum Refining,"[1] the basic operations of a refinery and how these operations may be identified within a general planning model. Schmeltz has also identified the basic processes of a refinery and used them in developing his refinery model.[2] In addition, Hadley has described the refinery operations using a simplified model.[3] Hadley's model is reproduced in Figure III-1 above.

The above description of the refining system and interprocess relations is used as the basis for estimating input-output coefficients and constructing the refinery's input-output model.

Estimating Technological Coefficients

The input-output model for the refinery was constructed using information provided in production reports obtained from the refinery. Quantities are expressed in barrels of 42 U.S. gallons at 60°F., B.S. & W. Free. Data obtained from the records of the refinery for the year of 1975 were used to

construct the input-output model. Data for one year, rather than one month, were used to overcome the effect of cyclical changes. The Appendix to this study includes a summary of the refinery's data used in this research.

Building the input-output model for the refinery requires reliable estimation of technological coefficients. To estimate technological coefficients, production relationships within the refinery must be identified and quantified. As has been explained above, production takes place within the refinery through seven processes. These processes are illustrated in Figure V-2 above. The production relationships for the year of 1975 are quantified and tabulated in Table V-1 below.

In Table V-1, Process I should provide 100% of the total amount started into Processes II, III, and IV. Also, Process I should provide the necessary amount of output to meet outside demand, $\bar{d}$, for its product, HFO. Moreover, part of the crude started into Process I is consumed as a result of production in that process. The entry of 75,840 barrels in the first column of Table V-1 above represents the amount consumed in production.

Processes II and III, as shown in Table V-1, produce only to satisfy the requirements of outside demand, $\bar{d}$, for their products, ADO and KEROS. They do not trasfer to other processes. This can also be realized from Figure V-2. As a result, Table V-1 shows zeroes all the way for these two processes except for the $\bar{d}$, and the $\bar{x}$ columns.

TABLE V-1

Production Relationships for the Year of 1975
(Quantities are Expressed in Barrels)

Process:	TO I	II	III	IV	V	VI	VII	$\bar{d}$	$\bar{x}$
I	75,480	639,979	257,054	594,565	0	0	0	948,925	2,516,003
II	0	0	0	0	0	0	0	639,979	639,979
III	0	0	0	0	0	0	0	257,054	257,054
IV	0	0	0	63,607	384,312	0	0	146,646	594,565
FROM V	0	0	0	0	0	258,966	125,346	0	384,312
VI	0	0	0	0	0	0	0	258,966	258,966
VII	0	0	0	0	0	0	0	125,346	125,346

Table V-1 shows that Process IV should provide for 100% of the amount to be started into Process V. Also, Process IV should meet the outside demand, $\bar{d}$, for its product, NAPH. Morover, notice that production losses occur within this process. The loss is a result of burning fuel gas. The refinery does not utilize this element and it is sent only to flare. The amount of fuel gas loss is included as self consumption for Process IV. This should not indicate that Process IV is responsible for the loss. The loss existed as a result of burning fuel gases. The amount of fuel gas loss of the equivalent of 63,607 barrels was included in Process IV to account for its effect on the model.

Process V, as presented in Table V-1, provides for 100% of the amount to be started into Processes VI and VII. As expressed in Table V-1, Process V has no outside demand for its products. It only transfers to Processes VI and VII. Therefore, the outside demand for its product is included as zero in Table V-1. This situation can be easily examined in Figure V-2 above.

Processes VI and VII both produce to satisfy outside demand for their products, PMOG and RMOG. They do not transfer to other processes, as may be seen from Table V-1. This is also apparent from Figure V-2 above.

In Table V-1, the $\bar{d}$ dolumn represents the outside demand for the refinery products "bill of goods" and the column $\bar{x}$ represents the total amount to be started into process. Notice that outside demand does not exist for Process V

and internal demand (internal transfers), does not exist for Processes II, III, VI, and VII.

Technological coefficients, representing elements of the consumption matrix (C_{ij}'s), are developed from the information presented in Table V-1 above in the following manner:

$$C_{11} \cdot X_1 = 75,480$$

$$C_{11} = 75,480 \div X_1 = 75,480 \div 2,516,003 = .03$$

$$C_{12} \cdot X_2 = 639,979$$

$$C_{12} = 639,979 \div X_2 = 639,979 \div 639,979 = 1.00$$

$$C_{13} \cdot X_3 = 257,054$$

$$C_{13} = 257,054 \div X_3 = 257,054 \div 257,054 = 1.00$$

$$C_{14} \cdot X_4 = 594,565$$

$$C_{14} = 594,565 \div X_4 = 594,565 \div 594,565 = 1.00$$

$$C_{44} \cdot X_4 = 63,607$$

$$C_{44} = 63,607 \div X_4 = 63,607 \div 594,565 = .10$$

$$C_{45} \cdot X_5 = 384,312$$

$$C_{45} = 384,312 \div X_5 = 384,312 \div 384,312 = 1.00$$

$$C_{56} \cdot X_6 = 258,966$$

$$C_{56} = 258,966 \div X_6 = 258,966 \div 258,966 = 1.00$$

$$C_{57} \cdot X_7 = 125,346$$

$$C_{57} = 125,346 \div X_7 = 125,346 \div 125,346 = 1.00$$

The coefficient C_{ij} represents the amount of output from process i needed per each unit to be started into process j. Notice that the rest of the technological coefficients (C_{ij}'s), other than those calculated above, are equal to zero.

Next, the input-output relationships for the refinery being studied are considered. These relationships represent the refinery's input-output model.

Input-Output Relationships of the Refinery

The first step in developing input-output relationships of the refinery under consideration is the compilation of the consumption matrix, C. Using estimates of the technological coefficients (C_{ij}'s) as developed above, the following 7 by 7 consumption matrix is constructed for the refinery.

Notice that the entries included in the consumption matrix for the refinery are mostly zeroes. This is because there are few interprocess transfers. All transfers are forward transfers, backward transfers do not exist. Also notice that $C_{11} = .03$ represents the amount consumed in

$$C = \begin{bmatrix} .03 & 1 & 1 & 1 & 0 & 0 & 0 \\ 0 & 0 & 0 & 0 & 0 & 0 & 0 \\ 0 & 0 & 0 & 0 & 0 & 0 & 0 \\ 0 & 0 & 0 & .10 & 1 & 0 & 0 \\ 0 & 0 & 0 & 0 & 0 & 1 & 1 \\ 0 & 0 & 0 & 0 & 0 & 0 & 0 \\ 0 & 0 & 0 & 0 & 0 & 0 & 0 \end{bmatrix}$$

Process I, and $C_{44} = .10$ represents the average loss which, for the purpose of constructing the model, was included as part of Process IV.

The identity matrix minus the consumption matrix, the input-output coefficient matrix, reads as follows:

$$(I - C) = \begin{bmatrix} .97 & -1 & -1 & -1 & 0 & 0 & 0 \\ 0 & 1 & 0 & 0 & 0 & 0 & 0 \\ 0 & 0 & 1 & 0 & 0 & 0 & 0 \\ 0 & 0 & 0 & .90 & -1 & 0 & 0 \\ 0 & 0 & 0 & 0 & 1 & -1 & -1 \\ 0 & 0 & 0 & 0 & 0 & 1 & 0 \\ 0 & 0 & 0 & 0 & 0 & 0 & 1 \end{bmatrix}$$

Using a computer program developed by Professor W. F. Bentz for linear planning models,[4] the inverse of the input/output coefficient matrix $(I-C)^{-1}$ was obtained. The inverse of the input/out coefficient matrix, $(I-C)^{-1}$, reads as follows:

$$(I-C)^{-1} = \begin{bmatrix} 1.03 & 1.03 & 1.03 & 1.15 & 1.15 & 1.15 & 1.15 \\ 0 & 1 & 0 & 0 & 0 & 0 & 0 \\ 0 & 0 & 1 & 0 & 0 & 0 & 0 \\ 0 & 0 & 0 & 1.11 & 1.11 & 1.11 & 1.11 \\ 0 & 0 & 0 & 0 & 1 & 1 & 1 \\ 0 & 0 & 0 & 0 & 0 & 1 & 0 \\ 0 & 0 & 0 & 0 & 0 & 0 & 1 \end{bmatrix}$$

Now the inverse of the input/output coefficient matrix, $(I-C)^{-1}$, can be used to predict the total amount to be started into production in each process, $\bar{x}$, if the outside demand, $\bar{d}$, is given. The $\bar{x}$ vector is obtained using the following relationship:

$$\bar{x} = (I-C)^{-1} \bar{d} \qquad (5-1)$$

Testing the Model

In the preceding section an input-output model for the refinery under consideration was developed and constructed. In this section, the performance of the input-output model, as developed above, is tested. Testing the model involves the application of the model in order to determine its predictability, and to point out the problems of application, if any. The results of this application should provide support to any conclusion regarding future applications of the model for planning purposes within the refinery.

The model has been tested using data related to the year of 1976 on a month to month basis. The objective is to see how well the model predicts the total amount to be started into production ($\bar{x}$), if the quantities of outside demand for the products ($\bar{d}$) "the bill of goods," are given. The actual outside demand, ($\bar{d}$), for the refinery products, as obtained from the records of the refinery, is presented in Table V-2 for the months January through December of 1976.

In Table V-2, the outside demand for the refinery products is given on a month by month basis. This information, as presented in Table V-2, is used as an input to the model in order to have the model predict the total amount to be started into production to meet the requirements of final demand, ($\bar{d}$). The structure of the input-output model as developed in this research are explained by equation (5-1) above. In applying the model, to obtain the total amount to be started into production, ($\bar{x}$), a vector of outside demand for the products, ($\bar{d}$), during each month is post-multiplied to the inverse of the input/output coefficient matrix, as obtained above.

For example, using the input-output model developed above, the total amount to be started into production in each process, ($\bar{x}$), for the month of January 1976 is obtained in the following manner:

TABLE V-2

Actual Outside Demand for the Products, ($\bar{d}$), as Obtained From the Refinery's Records for the Months January Through December of 1976 (Quantities Are Expressed in Barrels)

Products	HFO I	ADO II	KEROS III	NAPH IV	PMOG V	RMOG VI
January	102,204	69,901	30,667	14,772	27,551	15,620
February	109,685	74,522	33,624	15,409	27,511	16,827
March	100,267	78,135	28,093	12,733	39,632	4,521
April	107,121	77,754	38,098	16,603	38,947	13,944
May	98,868	77,424	27,725	15,969	31,146	13,682
June	108,493	82,453	37,422	19,699	30,417	19,328
July	100,285	82,281	34,212	12,210	31,297	20,701
August	80,199	68,079	22,155	17,748	31,519	1,810
September	101,473	75,081	35,928	14,353	25,319	25,449
October	106,709	79,525	37,862	19,323	32,563	15,476
November	102,448	73,933	36,236	19,616	28,086	16,264
December	105,365	80,264	39,278	21,801	35,318	8,795

$$(I - C)^{-1} \qquad \bar{d}$$

$$\bar{x} = \begin{bmatrix} 1.03 & 1.03 & 1.03 & 1.15 & 1.15 & 1.15 & 1.15 \\ 0 & 1 & 0 & 0 & 0 & 0 & 0 \\ 0 & 0 & 1 & 0 & 0 & 0 & 0 \\ 0 & 0 & 0 & 1.11 & 1.11 & 1.11 & 1.11 \\ 0 & 0 & 0 & 0 & 1 & 1 & 1 \\ 0 & 0 & 0 & 0 & 0 & 1 & 0 \\ 0 & 0 & 0 & 0 & 0 & 0 & 1 \end{bmatrix} \begin{bmatrix} 102,204 \\ 69,901 \\ 30,667 \\ 14,772 \\ 0 \\ 27,551 \\ 15,620 \end{bmatrix}$$

Notice that the outside demand for Process V outputs is included as zero in the $\bar{d}$ vector. This is in accordance with the above analysis of production flow within the refinery.

The calculations to obtain the $\bar{x}$ vector are performed using the same computer program referred to above which was developed by Professor W. F. Bentz.[5] The total amount to be started into production in each process, $(\bar{x})$, is calculated by the model for the month of January of 1976 as follows:

$$\bar{X} \text{ (Predicted by the Model) January 1976} = \begin{bmatrix} 275,415 \\ 69,901 \\ 30,667 \\ 64,381 \\ 43,171 \\ 27,551 \\ 15,620 \end{bmatrix}$$

In the same way as the $\bar{x}$ vector for the month of January 1976 was calculated, the model was used to predict the total amount to be started into production in each process, $(\bar{x})$, for the months February through December of 1976. Predictions, as obtained from the input-output model, are presented in Table V-3 for the months January through December of 1976.

Thus far, the input-output model for the refinery has been tested using actual data. The model has produced a set of predictions which are presented in Table V-3 below. However, no conclusions can be reached until these predictions are compared with actual results. Comparing the results obtained from the input-output model with actual results and testing the extent to which the model succeeded in its predictions are both discussed in Chapter VI, along with the analysis of results.

Considered next is the question of how the refinery's management may apply the input-output model in planning and controlling refinery operations. An example of how to develop a general operating plan for the refinery is explained.

Application of the Model to Planning and Budgeting

In the preceding sections, the refinery's input-output model was developed and empirically tested. The model was used to predict the production levels associated with different levels of final demand. In this section, the

TABLE V-3

The Total Amount to be Started into Production, ($\bar{x}$) as Predicted By the Model for the Months January through December Of 1976 (Quantities are Expressed in Barrels)

Process	I	II	III	IV	V	VI	VII
Jan.	275,415	69,901	30,667	64,381	43,171	27,551	15,620
Feb.	293,006	74,522	33,624	66,385	44,338	27,511	16,827
Mar.	278,043	78,135	28,093	63,206	44,153	39,632	4,521
Apr.	309,472	77,754	38,098	77,217	52,891	38,947	13,944
May	279,965	77,424	27,725	67,549	44,828	21,146	13,682
Jun.	314,977	82,453	37,422	77,160	49,745	30,417	19,328
Jul.	297,030	82,281	34,212	71,342	51,998	31,297	20,701
Aug.	234,211	68,079	22,155	56,752	33,329	31,519	1,810
Sep.	293,647	75,081	35,928	72,356	50,768	25,319	25,449
Oct.	308,188	79,525	37,862	74,846	48,039	32,563	15,476
Nov.	292,464	73,933	36,236	71,073	44,350	28,086	16,264
Dec.	307,365	80,264	39,278	73,237	44,113	35,318	8,795

refinery's input-output model is used to illustrate the development of a general plan for the refinery.

Consequently, the objective of the following analysis is to explain how the model is used in planning production levels and financial operating plans for the refinery under consideration. Planning for production levels is represented by the set of predictions which was obtained from the model and presented in Table V-3 above.

However, to explain how the refinery's input-output model is used in planning production requirements, some new relationships are to be identified. Let W be defined as a rectangular matrix which depicts the per unit requirements from different inputs. The per unit matrix, W, reads as follows:

$$W = \begin{bmatrix} W_{11} & W_{12} & \cdot & \cdot & \cdot & W_{1n} \\ \cdot & \cdot & \cdot & \cdot & \cdot & \cdot \\ \cdot & \cdot & \cdot & \cdot & \cdot & \cdot \\ \cdot & \cdot & \cdot & \cdot & \cdot & \cdot \\ W_{m1} & W_{m2} & \cdot & \cdot & \cdot & W_{mn} \end{bmatrix} \quad \text{where,}$$

W_{ij} represents the amount of the ith input (labor, material, parts, utilization of capacity, etc.) per unit of the jth product started into process.

From the per unit requirement matrix, a total input requirement vector is developed. The total input requirement vector ($\bar{r}$) is obtained by multiplying the per unit

requirement matrix (W) times the vector of total amount to be started into process ($\bar{X}$), in the following form:

$$\bar{r} = W\bar{X} \tag{5-2}$$

Next, total production cost is obtained by premultiplying the total input vector ($\bar{r}$) by the row vector ($\bar{P}$) of input prices:

$$\text{Total Cost} = \bar{P}\bar{r} \tag{5-3}$$

Substituting for $\bar{X}$ in equation 5-2 above, the equation can be written in the following form:

$$\bar{r} = W(I - C)^{-1}\,\bar{d} \tag{5-4}$$

$$= WA^{-1}\,\bar{d} = (WA^{-1})\,\bar{d} \tag{5-5}$$

where $A^{-1} = (I - C)^{-1}$.

Thus far, it has been explained how input-output analysis may be used in planning production requirements for the firm. Next, the refinery's input-output model is used to develop a general operating plan for the refinery under consideration.

Planning Production Requirements for the Refinery

The micro input-output model, as a planning tool, is applied in two important areas of planning production operations. First, it is applied in planning production levels corresponding to different demand levels. Second, input-output analysis is applied in planning production requirements from different inputs.

In previous sections of this chapter, it has been explained how the refinery's input-output model is used in planning production levels within the refinery to correspond to outside demand for the refinery's products. Using the model, the total amount to be started into each process for the months January through December of 1976 has been predicted. These predictions are presented in Table V-3 above. The final demand vector ($\bar{d}$) as given, and the total amount to be started into each process ($\bar{x}$), as predicted by the model, are reproduced below for the month of January 1976:

$$\bar{d} = \begin{bmatrix} 102,204 \\ 69,901 \\ 30,667 \\ 14,772 \\ 0 \\ 27,551 \\ 15,620 \end{bmatrix} \quad ; \quad \bar{x} = \begin{bmatrix} 275,415 \\ 69,801 \\ 30,667 \\ 64,381 \\ 43,171 \\ 27,551 \\ 15,620 \end{bmatrix}$$

Next, the refinery's input-output model is used to estimate total production requirements for the refinery under consideration. For simplicity, estimates of production requirements are presented only for the month of January 1976. However, the same analysis can be used to develop estimates of production requirements for other months.

The analysis begins with calculations of the W matrix for the refinery, in the same way as explained above. Then,

the W matrix is used to calculate the total requirement vector, $\bar{r}$. Finally, total cost is calculated and an operating budget for the refinery is completed.

The W matrix, which represents the per unit requirements from different inputs, for the refinery under consideration is prepared from the analysis of refinery costs during the year of 1975, as shown in Table V-4 below.

Notice that all crude oil is started in Process I. Refinery operating costs include all costs incurred in the refinery. The administration, general, and distribution costs include management salaries, office expenses, marketing and distribution expenses and other related costs. The total number of barrels of crude oil started into production, the total refinery operating costs, and the total administration, distribution, and general costs are all obtained from the refinery records for the year of 1975. However, the assignment of costs to different processes has been worked out, by the writer, based on approximation of the market realized value of different products.

The W matrix has been developed for the refinery based on the information given in Table V-4 below. The W matrix reads as follows:

$$W = \begin{bmatrix} 1 & 0 & 0 & 0 & 0 & 0 & 0 \\ .010 & .074 & .046 & .020 & .094 & .1116 & .100 \\ .001 & .009 & .006 & .002 & .011 & .014 & .012 \end{bmatrix},$$

where the W_{ij} represents the amount of the ith input (in this case, crude oil, refinery operating costs, and administrative and distribution costs), per unit of input started into the jth process.

TABLE V-4

Summary of Refinery Costs--1975

	Crude Oil (in units)	Refinery Operating Costs ($)	Administrative, General, and Distribution Costs ($)
I	2,516,003	$ 238,837	$109,070
II	0	447,205	217,925
III	0	121,308	55,400
IV	0	115,482	52,736
V	0	367,443	167,800
VI	0	335,550	139,535
VII	0	128,175	58,534
Total	2,516,003	$1,754,000	$801,000

Notice that crude oil is included in terms of units needed per each unit started into process. The refinery operating costs are measured in terms of direct labor hours. For example, $W_{21} = .010$ indicates that 1% of a direct labor hour is needed for each unit started into process I. Administrative, general, and distribution expenses are measured in terms of total hours worked in office and on distribution.

The total requirement vector ($\bar{r}$) for the refinery is obtained, using the methodology developed above, as follows:

$$\bar{r} = W\,(I - C)^{-1}\,\bar{d} \quad \text{(from equation 5-4 above)}$$

Therefore, for the month of January 1976:

$$\bar{r} = \begin{bmatrix} 1 & 0 & 0 & 0 & 0 & 0 & 0 \\ .010 & .074 & .046 & .020 & .094 & .116 & .100 \\ .001 & .009 & .006 & .002 & .011 & .014 & .012 \end{bmatrix} .$$

$$\begin{bmatrix} 1.03 & 1.03 & 1.03 & 1.15 & 1.15 & 1.15 & 1.15 & 102,204 \\ 0 & 1 & 0 & 0 & 0 & 0 & 0 & 69,901 \\ 0 & 0 & 1 & 0 & 0 & 0 & 0 & 30,667 \\ 0 & 0 & 0 & 1.11 & 1.11 & 1.11 & 1.11 & 14,772 \\ 0 & 0 & 0 & 0 & 1 & 1 & 1 & 0 \\ 0 & 0 & 0 & 0 & 0 & 1 & 0 & 27,551 \\ 0 & 0 & 0 & 0 & 0 & 0 & 1 & 15,620 \end{bmatrix} = \begin{bmatrix} 275,415 \\ \\ 16,245 \\ \\ 1,880 \end{bmatrix}$$

Now, assuming that prices for the month of January 1976 are expected to be as follows:

$$\bar{P} = [\$10 \quad \$20 \quad \$40]$$

This means that crude oil will cost \$10 per barrel, operating costs will be \$20 per direct labor hour, and administrative and distribution costs will be \$40 per each hour worked in office or on distribution. The total cost in this case is calculated in the following manner:

$$\text{Total Cost} = \bar{P}.\bar{r} = [10 \quad 20 \quad 40] \begin{bmatrix} 275,415 \\ 16,245 \\ 1,880 \end{bmatrix}$$

$$= \$3,154,250$$

Hence, using the input-output model, the refinery management is able to predict the level of production necessary to meet the requirement of an expected outside demand for its products. This prediction has been represented, in this study, by the total amount to be started into each process ($\bar{x}$). Also, the refinery is able to estimate the total costs expected at the desired level of production.

Therefore, for the month of January 1976, an operating budget for the refinery is developed based on the information provided by the input-output model, as explained above. The general operating budget for the refinery for the month of January 1976 is presented in Table V-5 below.

This kind of information is vital for planning and budgeting refinery operations. The quality and content of this information can be improved by breaking down the refinery operating costs into fixed and variable parts. Also, the variable element may be broken into its components as labor, indirect material, heat, etc. The same thing is true for the administrative, general and distribution costs.

It has been explained how the model is used in planning the refinery operations for the month of January. However, the model can be easily used to develop a year-around

plan on a month by month basis.

The example of planning production requirements for the refinery, as explained above, is a crude example. In reality, a refinery would separate costs into fixed and variable, by process, and forecast costs accordingly.

The objective of the above presentation is to show that the model can be used to forecast operating costs given input usage rates and input prices.

The model is capable of predicting profits associated with different levels of production in the same way as it predicts costs. However, profits have not been calculated in this study due to lack of information.

The model has been recommended by several writers as a means of planning and budgeting production levels. Farag explains the advantages of the model as follows:

> Using the sales forecasts and inventory requirement information, it is possible to use the micro input-output model to obtain conditional point predictions of the levels of production in each department corresponding to each level of sales. The model also permits the calculation of the costs and profits associated with each production program. This model of planning enterprise activities ensures the consistency of the plan in the sense that overproduction or bottlenecks can be avoided, assuring the accuracy of the sales forecasts. Moreover, by comparing the vector of total production of the departments, X, to the vector of capacity of these departments, K, an index of the degree of utilization of the resources of the enterprise may be obtained.[6]

Thus far, the input-output model has been developed and empirically tested. Its possible application to planning refinery operations has also been demonstrated. Next, the

model will be validated and the results obtained will be analyzed. This phase of the study is the subject of the next chapter.

TABLE V-5

A General Operating Plan for the Refinery
For the Month of January 1976

Production Levels:

Quantitites To Be Started Into Each Process

(Expressed in Barrels of Oil)

Process		Process	
I.	245,415 Barrels	V:	43,171 Barrels
II.	69,901 "	VI.	27,551 "
III:	30,667 "	VII.	15,620 "
IV:	64,381 "		

Production Requirements:

Expected Production Costs

(In Dollars)

Crude Oil	$2,754,150
Refinery Operating Costs.	324,900
Administrative, General, and Distribution Costs	75,000
TOTAL COSTS (Expected)	$3,154,250

FOOTNOTES TO CHAPTER V

[1]A. S. Manne, A Linear Programming Model of the U.S. Petroleum Refining Industry (Santa Monica, California: The Rand Corporation, RM-1757, July 1956).

[2]W. F. Schmeltz, "Accounting and Management Control Practices in Petroleum Refining," unpublished Ph.D. dissertation, Western Reserve University, Department of Economics, February 1966, pp. 250-285.

[3]G. Hadley, Linear Programming (Reading, Massachusetts: Addison-Wesley Publishing Co., Inc., 1962), pp. 452-463.

[4]W. F. Bentz, A Computer Program Used in Solving Cost Accounting Problems (Norman, Oklahoma: University of Oklahoma, Division of Accounting, 1978).

[5]Ibid.

[6]S. W. Farag, "A Planning Model for the Divisionalized Enterprise," The Accounting Review (April 1968), pp. 314-315.

CHAPTER VI

ANALYSIS OF THE RESULTS AND MODEL VALIDATION

This chapter includes an analysis of the results obtained from the refinery model and an evaluation of its performance. Basically, the analysis is performed within the framework of model validity, which includes evaluation of the model and its basic assumptions in addition to evaluation of the results obtained from the model. As part of the model validation process, model performance is examined statistically and its results are evaluated. For the purpose of this study, only technical validity of the refinery input-output model is considered.

Validating the Model

Schellenberger's framework for model validation is used to examine the validity of the input-output model for the refinery under consideration.[1] In the following analysis, technical validity of the refinery's input-output model is considered. Technical validity refers to a reasonably identifiable set of criteria, against which any application of managerial analysis may be compared.[2]

Technical validity encompasses four components: (1) model validity; (2) data validity; (3) logical validity; and (4) predictive validity. Each of these components is discussed and examined in relation to the refinery input-output model developed above.

Model Validity

Model validity involves the process of identifying the assumptions underlying the model and comparing them with what exists in the real world, as explained by Schellenberger:

> Model validity refers to the correspondence of the model to the real world. The best possible model is one that exactly reproduces what is perceived. The validity of the model must be judged by comparing each assumption to the real world.[3]

The basic assumptions underlying the input-output model are: (1) homogeneity of products; and (2) constant technological coefficients.

Homogeneity of products. According to this assumption each activity included in the matrix must have one input or one output. By-products and joint products are not allowed. Professor Ijiri states:

> In order to apply the input-output analysis, the products of any process must be homogeneous, i.e., joint products or by products should not be produced in any process included in the matrix. The reason of this assumption is that each cell in a matrix must have a single input or output coefficient.[4]

However, if in a specific situation by-products or joint products appear, data can be modified and adjusted to comply with the homogeneity assumption. The adjustment

might be achieved by expressing joint and by-products in terms of relative quantities of the basic output. Or, if possible and practical, the process can be broken into two or more processes each of which has a single product.

Constant technological coefficients. This assumption implies that production takes place with fixed relationships between inputs and outputs. Professor Livingstone states:

> Production takes place through process with fixed technological yields of constant proportionality. There is only one process used with no substitution in each activity.[5]

It is difficult to satisfy this particular assumption because of the fact that innovation and advanced technology might extremely affect the existing technological coefficients. When coefficients change, the relationships expressed in the technological matrix no longer hold and the matrix should be revised.

The operations of the reinfery under consideration meet both of these assumptions. First, homogeneity of products is secured because for each process included in the model there is only one basic input and one basic output. Second, technological coefficients are constant over time periods. This is true since production relationships within the refinery studied do not change. The percentages of input to each process provided by other processes do not change over time.

Technological coefficients were held constant

because intermediate products are not purchased from outside for rerefining. The accurate predictions of the amount to be started into process for five of the processes included in the model support this contention. The inaccurate predictions in the case of the other two processes were due to excessive losses, as will be explained later, and do not appear to be related to change in production relationships.

Notice that even though the yields of different products obtained from a barrel of crude oil have changed significantly during 1976, this change did not affect the model performance.

Another assumption which is inherent in input-output analysis is the linearity assumption. This assumption has been discussed with production people in the refinery. It has been concluded that production relationships can be approximately explained by a linear function, as might be proven from Table V-1 of Chapter V.

As a result of the above analysis of the assumptions underlying the input-output model, it is concluded that the model fairly describes the operations of the refinery under consideration.

Data Validity

For data validity the objective is to examine and insure the validity of raw and structured data. Data obtained from records of the refinery comprise the raw data.

Raw data were examined for accuracy, impartiality, and representativeness. Accuracy means the ability to correctly identify and measure what is desired.[6] Data used in the study are obtained from refinery records and are fairly accurate. Impartiality is the assurance that data are correctly recorded.[7] Necessary steps have been performed to secure correctness of the collected data. Finally, the amount of data collected represents fairly the universe from which it is drawn.

Structured data refer to raw data upon which some manipulations have been performed, involving addition and subtraction. Calculations have been reviewed step by step and the validity of structured data has been assured.

Logical Validity

Logical validity of the model deals with the progression from model construction to solution, and assuring that the progression is logical. This process includes: (1) correctness of the solution procedure, i.e., whether the mathematical manipulations are correct and accurate; (2) the logical flow of the model; and (3) identifying the obvious omission of a relevant variable. Schellenberger points out the difficulty of evaluating logical validity because no clear methodology to conduct such an evaluation exists. He adds that the analyst is tempted to skip lightly over this phase because of such difficulty.

Mathematical manipulations within the refinery

input-output model were tested and accuracy and correctness were assured. Solution to the model was obtained using an algorithm developed by Professor Bentz[8] which is self checked for accuracy, correctness and logical flow. This logarithm provides certain measures to control and identify missing variables and accounts for irregular progression. An error message is received, if irregularities exist. The matrices and vectors are reprinted by the computer for double-checking before they are processed.

Predictive Validity

Predictive validity of the model deals with prediction errors. In this case, the focus is on the differences between actual and predicted results. Schellenberger discusses two concepts of predictive validity. The first deals with predictive validity in prediction models. The second deals with predictive validity in final models. Final models portray the environment and are considered general models.

The input-output model developed in this research is considered a final model. Prediction models are used to develop parameter values to be used as inputs to final models. If the final demand vector ($\bar{d}$) which is used as input to the model developed in this research is obtained using other models, these other models are called prediction models. However, this research deals only with a final model.

Predictive validity deals with differences between

actual and predicted results and the significance of these differences. The question to be answered is to what extent did the model succeed in predicting actual performance? Usually, statistical techniques are used in this phase of model validity to help the analyst in his conclusions regarding the model.

The total amount to be started into production in each process, $\bar{x}$, as predicted by the input-output model, is presented in Table V-3 above. In Table VI-1 below, the actual total amount to be started into production in each process, $\bar{x}$, as obtained from the refinery's records, is presented. Comparison of Tables V-3 and VI-1 indicates the differences between actual and predicted results.

Next, differences between actual and predicted results are examined and the significance of those differences is evaluated. Statistical techniques are used to evaluate the significance of these differences on the overall performance of the input-output model.

Application of statistical techniques. The chi-square "goodness of fit" test is used to evaluate the results obtained from the application of the refinery's input-output model. The chi-square goodness of fit test is frequently used to evaluate the applicability of a theory or a mathematical model under certain circumstances.[9] The test deals with differences between actual and predicted results and the significance of such differences. For the purpose it serves,

TABLE VI-1

The Total Amount Started into Production, ($\bar{x}$) as Obtained From the Records of the Refinery for the Months January Through December of 1976
(Quantities are Expressed in Barrels)

Process	I	II	III	IV	V	VI	VII
Jan.	275,982	69,901	30,667	64,930	43,171	27,551	15,620
Feb.	294,083	74,522	33,624	67,429	44,338	27,511	16,827
Mar.	278,543	78,135	28,093	63,692	44,153	39,632	4,521
Apr.	307,404	77,754	38,098	75,209	52,891	38,947	13,944
May	281,233	77,424	27,725	68,779	44,828	31,146	13,682
Jun.	317,725	82,453	37,422	79,825	49,745	30,417	19,328
Jul.	298,875	82,281	34,212	73,131	51,998	31,297	20,701
Aug.	240,390	68,079	22,155	62,745	33,329	31,519	1,810
Sep.	291,052	75,081	35,928	69,838	50,768	25,319	25,449
Oct.	311,620	79,525	37,862	78,175	48,039	32,563	15,476
Nov.	297,869	73,933	36,236	76,316	44,350	28,086	16,264
Dec.	312,464	80,264	39,278	78,183	44,113	35,318	8,795

the test fits the needs of this research and is used in evaluating the predictive validity of the refinery's input-output model.

The chi-square goodness of fit test provides that if the aggregate discrepancy between the observed (actual) and theoretical (predicted) frequencies is too great to attribute to chance fluctuations at the selected significance level, the null hypothesis is rejected.

The test proceeds by calculating the chi-square statistic, x^2, whose value depends on the aggregate discrepancy between the actual and predicted results. The value of the chi-square statistics, x^2, is calculated from the following equation on a month by month basis:

$$x^2 = \sum_{t=o=1}^{N} \frac{(f_o - f_t)^2}{f_t} \quad , (n = 7), \qquad \text{(VI-1)}$$

where, f_o refers to calculated frequency (obtained from the model), and f_t refers to actual frequency (obtained from the records).

The chi-square statistic, x^2, was calculated using the results obtained from the refinery input-output model for the months January through December of 1976. Using chi-square tables with six degrees of freedom, degrees of freedom are equal to the number of observations minus one (7 - 1), the decision rules reported in Table VI-2 were developed to test the null hypothesis.

The null and alternative hypotheses to be tested, as developed in Chapter I, read as follows:

Ho: The operations of a simple refinery can be expressed in terms of an input-output model with sufficient validity to be of value in the planning and control of refinery operations.

Ha: The operations of a simple refinery cannot be expressed in terms of an input-output model with sufficient validity to be of value in the planning and control of refinery operations.

Using predicted results obtained from the model, as shown in Table V-3, and the actual results obtained from the refinery records, as shown in Table VI-1, the chi-square statistics for the months January through December of 1976 are calculated.

The chi-square statistics, x^2, and the decision to accept or reject the null hypothesis, based on the decision rules for different significance levels, are presented in Table VI-2 below.

Evaluation of the results. Reviewing the results obtained from the application of the chi-square "goodness of fit" statistical techniques, as presented in Table VI-2, one might conclude that the null hypothesis ought to be

TABLE VI-2

The Chi-Square Statistics, x^2, and the Decision

To Accept or Reject the Null Hypothesis

Presented for the Months January Through December of 1976

The Chi-Square Statistics $x^2 = \sum_{O=t=1}^{7} \frac{(fo - ft)^2}{f_t}$		Decision Rules		
		At 2%	At 5%	At 10%
		If $x^2 > 15.033$, Reject Ho If $x^2 \leq 15.033$, Reject Ho	If $x^2 > 12.592$, Reject Ho If $x^2 \leq 12.592$, Accept Ho	If $x^2 > 10.645$, Reject Ho If $x^2 \leq 10.645$, Accept Ho
January	5.8	Accept	Accept	Accept
February	20.0	Reject	Reject	Reject
March	4.6	Accept	Accept	Accept
April	66.2	Reject	Reject	Reject
May	27.8	Reject	Reject	Reject
June	116.0	Reject	Reject	Reject
July	56.3	Reject	Reject	Reject
August	795.0	Reject	Reject	Reject
September	110.5	Reject	Reject	Reject
October	186.3	Reject	Reject	Reject
November	486.7	Reject	Reject	Reject
December	412.6	Reject	Reject	Reject

rejected, stating that the input-output analysis is not applicable in this situation. However, a closer look at the results will indicate that the performance of the model was well accepted under all levels of significance for two months, January and March. On the other hand, the chi-square statistic (x^2) for the other months ranged from a low of 20.0 to a high of 795.00. This cannot be attributed to a chance fluctuation.

Because of the significant changes in the chi-square values from month to month, the chi-square test was repeated. This time the chi-square was calculated for each process based on the amount to be started into production in each process. Therefore, for each process, twelve observations were obtained representing the amount to be started into production for the months January through December of 1976. In this case, the same levels of significance were used but with eleven degrees of freedom (12 - 1).

The chi-square statistic, x^2, was calculated for the seven processes. The chi-square for processes II, III, V, VI, and VII was equal to zero ($x^2 = 0$). This indicates that the model performance as far as these processes are concerned is excellent and the null hypothesis is accepted. However, for processes I and IV, the chi-square statistic was very high; $x^2 = 469.7$ for Process I and $x^2 = 1,818.1$ for Process IV. This indicates that the fluctuation in results for these two processes is not attributable to chance

fluctuations and the null hypothesis ought to be rejected.

It is understandable that the performance of the input-output model depends on the accuracy of technological coefficients and the extent to which these coefficients are held constant. For the two processes where variations existed, Processes I and IV, two elements are included in building the model. In the first process, Process I, an element representing the amount consumed in production is included. The coefficient for the amount consumed in production in Process I is included as 3%. Analysis of the actual amount consumed in production in Process I for the months January through December of 1976 indicated that it was held constant at 3%. Therefore, the coefficient for the amount consumed in Process I is not responsible for the differences between predicted and actual results.

In Process IV, the amount of the average production loss is included in the model as self consumption for this process. The coefficient for the loss as included in the model is 10%. However, the acutal loss during the months January through December of 1976 did not occur at the average rate of 10%, as may be depicted in Table VI-3. This was the reason for the differences between predicted and actual results. The model predicted the total amount to be started into process based on an average loss of 10% of the total amount to be started into Process IV, while the actual loss has occurred at a rate higher than the average expected

TABLE VI-3

Comparison of Actual Loss Per Records With Average Loss as Included in the Model (Quantitites are Expressed in Barrels)

Month	Actual Amount Started into Production in Process IV	Actual Loss Occurred as Per Record	Average Loss (10% of the Amount Started	Excessive Loss (Actual Loss - Average Loss)
Jan.	64,930	6,987	6,493	494
Feb.	67,429	7,682	6,743	939
Mar.	63,692	6,806	6,369	437
Apr.	75,209	5,715	7,521	(1,806)
May	68,779	7,984	6,878	1,106
Jun.	79,825	10,381	7,983	2,398
Jul.	73,131	8,923	7,313	1,610
Aug.	62,745	11,668	6,275	5,393
Sep.	69,838	4,717	6,984	(2,267)
Oct.	78,175	10,813	7,818	3,995
Nov.	76,316	12,350	7,632	4,718
Dec.	78,138	12,269	7,814	4,455

loss. The differences in Process IV will have a carryover effect to Process I, because Process I provides for 100% of the amount to be started into Process IV. If excessive losses are ignored, the results will indicate that the chi-square statistics for all processes and all months are equal to or close to zero. This will lead to the acceptance of the null hypothesis stating that the input-output analysis is applicable to planning refinery operations.

In building the input-output model for the refinery, production losses were estimated and loss rates were provided for in the model. As a result, production volumes as predicted by the model were estimated based on loss rates as provided for in the model. The difference between the actual production volumes and the volumes predicted by the model is attributable to the fluctuations in actual loss rates during the year. Since loss rates as provided for in the model represent the average expected loss, the differences between actual and predicted results will be a function of loss rates.

Therefore, as a result of using the model, attention can be directed to the existence of excessive losses. The analysis of actual losses and comparisons of actual rates with predicted rates, as illustrated in Table VI-3, provides the refinery management with valuable information for control purposes. Analysis of these losses will point out weaknesses and initiatie corrective actions.

The results of this study support the hypothesis that

input-output analysis is applicable to planning refinery operations. In addition, these results provide practical support for future research in this area.

Even though the input-output model is applied to the operations of a small size refinery with limited products, the results of this application are encouraging. However, at this point, generalizations are not intended. Further investigation of more complex situations should be performed before general conclusions regarding refinery industry as a whole are stated.

Model Costs

Thus far in this research, an input-output model for the refinery under consideration has been constructed, implemented, and validated. However, the costs involved have not yet been considered. In the following paragraphs, model costs are briefly exposed. Detailed cost analysis is not intended.

Cost is a decisive factor in using the model, because if the cost of the model is higher than the benefits to be derived, the model is not economically feasible. Previous studies indicate that assembling the basic data from various sources presents the greatest problem and occupies most of the time involved in building and implementing an input-output model. The final calculations, involving matrix inversion, can be made in a very short time and at relatively small cost on a computer.[10]

Therefore, the process of estimating the technological coefficients and constructing the matrix of technological coefficients is the costly process. It involves most of the time of the analyst. Also costs related to revising the matrix in the future and gathering data for such a revision are significant. The costs involved in this process will differ from one situation to another depending on the kind of firm involved and the availability of the revised data.

The writer did not estimate the costs involved in this process. However, it is believed that the model can be constructed at a reasonable cost and that the benefits derived from the model, with no doubt, will exceed the costs of building and operating the model.

Previous experiences with model application and modeling refinery operations have indicated that linear models are not only economical but also profitable, as Hadley points out:

> Many of the larger oil companies have been using linear programming for some time to solve their blending problems. Some have claimed that substantive amounts of money were saved by means of linear programming.[11]

Based on past experience and according to the statements of different writers, as cited above, the costs involved in building and implementing an input-output model are expected to be reasonable. This supports the contention that the model is feasible and its adoption could benefit the refinery. The benefits to be derived from the input-output

model, as a micro-planning tool, are expected to exceed the cost of the model. However, exact estimations of costs and benefits is not intended in this research. This matter may be the subject of another paper.

FOOTNOTES TO CHAPTER VI

[1]R. E. Schellenberger, "Criteria for Assessing Model Validity for Managerial Purposes," Decision Sciences, Vol. 5, No. 4 (October 1974).

[2]Ibid., p. 645.

[3]Ibid., p. 645.

[4]Yuji Ijiri, "An Application of Input-Output Analysis to Some Problems in Cost Accounting," Management Accounting (April 1968), p. 59.

[5]J. L. Livingstone, "Input-Output Analysis for Cost Accounting, Planning and Control," The Accounting Review (January 1969), p. 51.

[6]Ibid., p. 647.

[7]Ibid., p. 647.

[8]W. F. Bentz, A Computer Program Used in Solving Cost Accounting Problems (Norman, Oklahoma: University of Oklahoma, 1978).

[9]M. Hamburg, Statistical Analysis for Decision Making (New York: Harcourt, Brace and World, Inc., 1970).

[10]R. O'Connor and E. W. Henry, Input-Output Analysis and Its Applications (New York: Hafner Press, 1976), p. 6.

[11]G. Hadley, Linear Programming (Reading, Mass: Addison-Wesley Publishing Company, Inc., 1962), p. 459.

CHAPTER VII

SUMMARY, CONCLUSIONS, AND RECOMMENDATIONS

This research was conducted because of the current need for testing different models and examining its propriety for planning and controlling operations of different firms. Different articles, in the accounting literature, have pointed out the benefits expected from modeling the activities of the firm.

Several models have been successfully applied in planning and controlling the activities of different firms. There are other models such as input-output analysis which may contribute significantly to effective planning and control at the level of the firm. However, these models need to be tested before making recommendations regarding their application.

This research was undertaken to test the applicability of input-output models in planning refinery operations. Different articles in the literature have pointed out, theoretically, the expected advantages of the micro input-output model. Some of these articles have described the areas where input-output analysis may be successfully applied. Among the

mentioned areas were refinery operations.

Scope of Study

The objective of this research was to develop an input-output model for a refinery and to test its applicability. The main research hypothesis concerned the validity of input-output analysis in describing refinery operations. One refinery was selected and an input-output model was developed for that particular refinery.

The refinery selected for the study is a small size refinery which comprises only simple refining operations. Most of the complex refining operations are not included in this refinery. The refinery uses crude oil only in its operations. Intermediate products are not purchased from outside because rerefining facilities are not included.

Data for the years 1975 and 1976 on a month by month basis were used to develop and test the refinery's input-output model. The results of these two years represent normal operations of the refinery.

Summary

The refinery's model developed in this research is an open-end, static input-output model for a simple refinery. It is an open-end model because the vector for outside demand, $\bar{d}$, is determined exogenously, outside the model. It is a static model because it does not deal with capital formation and capital transactions.

The model was developed from transactions matrix

expressed in physical units. In this study, physical units were used instead of monetary units because information obtained from the records of the refinery represents flow of physical units rather than monetary values. Since the transactions matrix is prepared in physical units, it can be easily converted into monetary terms, if this is needed. Outputs coefficients rather than input coefficients might have been used without affecting the performance of the model. However, based on the information obtained and according to research assumptions, the refinery's input-output model was constructed using physical input units.

The selected refinery represents the simplest setting for a modern refinery. It does not include a great number of processes. Only six final products are produced in the refinery. Most of the products might have been processed further had the refinery under consideration been a complex modern refinery. As has been illustrated in Figure V-2 in the previous chapter, the flow of production within the refinery is very simple. The operation is not complicated by rerefining and backward transfers.

The simplicity of the situation, as it exists in the refinery under consideration, should not affect the findings of this research. In a more complex situation, the analyst should provide additional care in estimating sequential relations as they may exist within the refinery. The matrix of technological coefficients will be more complex, but the

steps to the solution and the mechanism of the model are still the same. Therefore, simplicity of the refinery system, as discussed above, should not bear on the findings of this study. However, further testing of the input-output performance in more complex situations is recommended.

In developing input-output models, gathering data to be used in estimating technological coefficients represents a major problem. The extent to which the analyst is successful in gathering needed information will greatly influence the model. This is because the estimation of technological coefficients will directly affect model predictions. The extent to which technological coefficients are held constant over time will also bear on the results.

Technological coefficients as included in the re-refinery model developed in this research, proved to be fairly constant except for the coefficient for production losses. The coefficient for the amount lost in production in Process IV was included in the model as 10% of the amount to be started in Process IV. However, actual results for the year of 1976 showed that losses occurred at higher rates. This situation indicates that either the coefficient for the amount lost in production was poorly estimated or excessive losses have occurred which disturbed the results obtained from the model. It was indicated that the rate of 10% which was included in the model represents the average loss according to refinery estimates. Excessive losses did occur during

the year of 1976, as was explained in the production reports obtained from the refinery, and that was the reason for the differences between actual and predicted results.

The refinery's input-output model was first used, in this research, to predict production levels corresponding to different levels of outside demand. Then the model was used to develop an operating plan for the refinery for the month of January 1976. Other potential applications of the model were not included in this research. Other areas where the model may be applied include: (1) evaluating the effect of changes in prices of different inputs; (2) planning for inventory requirements; (3) joint-cost allocation; and (4) generalizing debit and credit entries to different accounts. Applications of the model in these areas may be the subject of future research.

The results of this study support the hypothesis that input-output analysis is applicable to planning refinery operations. The results are sufficiently encouraging to suggest that future research is likely to be productive.

In this research, Schellenberger's framework for model validation was used to examine the model's technical validity. The three kinds of validity considered by Schellenberger include: (1) technical validity, (2) operational validity, and (3) dynamic validity. In this research, only technical validity of the refinery's input-output model was considered. Technical validity includes a set of criteria

against which any application of managerial analysis might be compared. Operational validity, which deals with the importance of the divergences which are identified under technical validity, and dynamic validity, which assures that the model will continue to be operationally valid, might be postponed to future studies without affecting this research. Schellenberger's framework was used in this study because it includes a comprehensive set of criteria for model validation.

In studying the technical validity of the refinery's model, it was found that input-output analysis satisfactorily represents production relationships within the refinery. The most important of the assumptions underlying input-output analysis are: (1) the homogeneous products, (2) constant technological coefficients, and (3) the linearity assumptions which are inherent in the model. The homogeniety assumption states that for each cell included in the matrix there should be only one input or one output. Joint-products and by-products are not allowed. Joint-products and by-products, if they exist, should be translated in terms of the major product or otherwise be included as separate products in the matrix. The assumption of constant technological coefficients assumes that production relationships remain constant and that innovation will not affect the way in which production takes place. If the technological coefficients change, the relationships expressed in the input/output coefficients matrix no longer hold and the matrix should be revised. The

linearity assumption assumes that production processes can be characterized by linear functions.

In applying input-output analysis to refinery operations, in this research, no significant divergencies from these assumptions were depicted. However, the assumption of constant technological coefficients may not hold for either a long period of time or under different operating circumstances. Therefore, in other applications, it may be necessary to construct several different input-output coefficient matrices for different situations. Thus, the matrix of technological coefficients might need to be revised to incorporate any expected change in production relationships within the refinery.

The analyst should proceed with care when dealing with these assumptions. In most of the input-output applications, estimating technological coefficients represented the most difficult task. If the analyst estimates such coefficients with extra care and intelligence, his work will be extensively reduced. In fact, estimating technological coefficients is a team task rather than an individual matter.

Input-output analysis is a general planning model which is usually used in predicting production levels and planning production requirements for different levels of final demand. The analysis describes and analyzes the interprocess relationships and how they might be used to secure enough production to meet outside demand. Input-output

analysis is not advocated as a substitute for linear programming. Linear programming techniques are considered maximization models which optimize an objective function subject to constraint conditions. On the contrary, input-output analysis is not an optimization technique. It is a general model which provides specific results under certain circumstances. Linear programming techniques have been incorporated into input-output analysis by some writers.

Application of input-output analysis to petroleum refining operations is consistent with the application of linear programming in the same industry. Linear programming is usually used to provide estimates of how much should be produced for outside demand. Input-output analysis will help in planning for the production to satisfy the requirements of outside demand.

Linear programming has been successfully applied to solve several refining problems, as discussed in Chapter IV. Input-output is recommended as a complement to linear programming.

Conclusions

The conclusions drawn from this research cannot be generalized to other refineries because only one refinery of small size and simple operations was selected for the study. However, the findings of this study should be of benefit in future studies of this type.

This research was conducted based on the following assumptions which were emphasized in developing the refinery's model:

1. It was assumed that refinery operations could be subjected to the assumption of input-output analysis, with respect to the homogeniety of products and the constancy of technological coefficients.

2. It was assumed that the micro input-output model can be used to help refiners predict production levels and plan production requirements.

The following conclusions are reached in this research:

1. Refinery operations can be subjected to the assumptions of input-output analysis. Therefore, production relationships within a refinery can be expressed in an input-output framework.

2. The input-output refinery model can be used to predict the production volume in each process that corresponds to particular levels of final demand for the refinery's products.

3. The input-output refinery model can be used to generate an operating plan for the refinery. This should contribute to better, more timely planning of production requirements within the refinery.

4. The results of this research support the

hypothesis that input-output analysis is applicable to refinery accounting. However, additional research is recommended, especially applying the model in a more complex situation, before generalizing this hypothesis.

Recommendations

The way in which this research was conducted and the results of the study have generated some ideas which might be considered for future research. These research possibilities are presented below for the benefit of those who are interested in pursuing research in these areas:

1. This research focused on developing the input-output model using input coefficients in physical units. Constructing the model for another refinery using output coefficients and / or monetary units may be good subjects for future studies.

2. In this research, the applicability of input-output analysis to planning refinery operations was examined. Other applications of the model in other activities might be examined. Application of input-output analysis in planning the operations of a chemical plant was suggested by different writers and might be considered as the subject for some future studies.

3. The technical validity of the input-output model was considered in this research. Model validation techniques include operational validity and dynamic validity in addition

to technical validity. The input-output model should be examined for both operational and dynamic validity in future research.

BIBLIOGRAPHY

Books:

Allen, R. I. and Gossling, W. F. Estimating and Projecting Input-Output Coefficients. London: Input-Output Publishing Company, 1975.

Chisholm, R. K. and Whitaker, G. R. Forecasting Methods. Homewood, Illinois: Richard D. Irwin, Inc., 1971.

Churchman, Ackoff, and Arnoff. Introduction to Operations Research. New York: John Wiley & Sons, Inc., 1964.

Draper, J. E. and Klingman, J. S. Mathematical Analysis: Business and Economic Applications. New York: Harper and Row Publishers, 1967.

Emos, J. L. Petroleum Progress and Profits. Cambridge, Massachusetts: The MIT Press, 1962. Pp. 1-262.

Farag, S. M. Input-Output Analysis: Applications to Business Accounting. Urbana, Illinois: Center for International Education and Research in Accounting, Monograph No. 5, 1967.

Field, R. E. Financial Reporting in the Extractive Industries. New York: The AICPA, ARS #11, 1969.

Financial Accounting Standards Board. Financial Accounting and Reporting by Oil and Gas Producing Companies. Statement No. 19, December 1977.

Gossling, W. F. Capital Coefficients and Dynamic Input-Output Models. London: Input-Output Publishing Company, 1975.

_____. Input-Output and Throughput: Proceedings of 1971 Norwich Conference. London: Input-Output Publishing Company, 1975.

Guetzkow, H.; Kotler, P.; and Schultz, R. Simulation in Social and Administrative Science--Overview and Case Examples. Englewood Cliffs, New Jersey: Prentice-Hall, Inc., 1972.

Hadley, G. Linear Programming. Reading, Mass.: Addison-Wesley Publishing Company, Inc., 1962.

Hamburg, Morris. Statistical Analysis for Decision Making. New York: Harcourt, Brace & World, Inc., 1970.

Hill, J. E. and Kerber, A. Models, Methods, and Analytical Procedures in Education Research. Detroit: Wayne State University Press, 1967.

Hottenstein, M. P. Models and Analysis for Production Management. Scranton, Pennsylvania: International Textbook Comapny, 1968.

Leontief, W. W. The Structure of American Economy, 1919-1939: An Empirical Application of Equilibrium Analysis. New York: Oxford University Press, 1951. Second edition.

Manne, A. S. Scheduling of Petroleum Refinery Operations. Cambridge, Mass.: Harvard University Press, 1956.

Mattessich, R. Accounting and Analytical Methods. Homewood, Illinois: Richard D. Irwin, Inc., 1964. First printing.

Milne, T. E. Business Forecasting: A Managerial Approach. London: Longman Group Limited, 1975.

O'Connor, R. and Henry, E. W. Input-Output Analysis and Its Applications. New York: Hafner Press, 1975.

Richardson, H. W. Input-Output and Regional Economics. New York: John Wiley & Sons, 1972.

Rigby, P. H. Conceptual Foundations of Business Research. New York: John Wiley & Sons, Inc., 1965.

_____. Models in Business Analysis. Columbus, Ohio: Charles E. Merrill Publishing Company, 1969.

Schmeltz, W. F. Accounting and Management Control Practices in Petroleum Refining. Unpublished Ph.D. Dissertation. Western Reserve University, Department of Economics, February 1966.

Staubus, G. J. Activity Costing and Input-Output Accounting. Homewood, Illinois: Richard D. Irwin, 1971.

The Cowles Foundation for Research in Economics. Studies in Process Analysis. Edited by Manne and Markowitz. New York: John Wiley & Sons, 1961.

Traenkle, J. H.; Cox, E. B.; and Bullard, J. A., Jr. The Use of Financial Models in Business. New York: Financial Executives Research Foundation, 1975.

Articles and Periodicals:

Arnoff, E. L. "Operations and Decision-Oriented Management Information System." Management Accounting. June 1970.

Bentz, W. F. "Input-Output Analysis for Cost Accounting, Planning and Control: A Proof." The Accounting Review. April 1973.

_____. "Incremental Costing of Interrelated Activities: Methodological Extensions." Presented to the Accounting Workshop, University of Oklahoma, Norman, Oklahoma. August 1976

_____. "A Computer Extended Costing Model." Presented to the Accounting Workshop, University of Oklahoma, Norman, Oklahoma. August 1976.

Bentz, W. F.; Sherr, and Miller. "Sensitivity Analysis with Interaction Effects." Decision Sciences. July 1976.

Butler, J. J. "Joint Product Analysis." Management Accounting. December 1977.

Butterworth, J. E. and Sigloch, B. A. "A Generalized Multi-Stage Input-Output Model and Some Derived Equivalent Systems." The Accounting Review. October 1971.

Churchill, N. C. "Linear Algebra and Cost Allocations: Some Examples." The Accounting Review. October 1964.

Cohen, A. S. and Harter, A. P. "An Input-Output Analysis of the Cost of Air Pollution Control." Management Science, Vol. 21, No. 4. December 1974.

Davidson, H. J. and Trueblood, R. M. "Accounting for Decision Making." The Accounting Review. October 1961.

Demski, J. S. "An Accounting System Structured on a Linear Programming Model." The Accounting Review. October 1967.

Dopuch, Birnberg, and Demski. "An Extension of Standard Cost Variance Analysis." The Accounting Review. July 1967.

Farag, S. M. "A Planning Model for the Divisionalized Enterprise." The Accounting Review. October 1971, pp. 746-755.

Farrar, G. L. "How Refiners Size Up Process Control by Computers." The Oil and Gas Journal. April 29, 1963.

Feller, R. E. "Accounting for Joint Products in the Petroleum Industry." Management Accounting. September 1977.

Feltham, G. A. "Some Quantitative Approaches to Planning for Multiproduct Production Systems." The Accounting Review. January 1970.

Fox, J. L. "Accounting for Petroleum Refiners." The Price Waterhouse Review, IX, No. 2 (Summer 1964).

_____. "Cost Analysis Budget to Evaluate Operating Alternatives in Oil Refiners." The National Association of Cost Accountants Bulletin. November 1949.

Frank, W. and Manes, R. "A Standard Cost Application of Matrix Algebra." The Accounting Review. July 1967.

_____. "Solving Financial Planning Problems Using Input-Output Models." The Accounting Review (Academic Notes). April 1974.

Gambling, T. E. "A Technological Model for Use in Input-Output Analysis and Cost Accounting." Management Accounting. December 1968.

Gambling, T. E. and Nour, A. "A Note on Input-Output Analysis: Its Uses in Macro-Economics and Micro-Economics." The Accounting Review. January 1970.

Griffin, C. H. "Multiple Products Costing in Petroleum Refining." The Journal of Accountancy. March 1958.

Hartley, R. V. "Operations Research and Its Implications for the Accounting Profession." The Accounting Review. April 1968.

_____. "Decision-Making When Joint Products are Involved." The Accounting Review. October 1971.

Howard, J. A. and Morgentoth, W. M. "Information Processing Model of Executive Decision." Management Science. Vol. 14, No. 7. March 1968.

Ijiri, Y. "An Application of Input-Output Analysis to Some Problems in Cost Accounting." Management Accounting. April 1968.

Jones, G. M. "Linear Algebra for Neophytes." The Accounting Review. 1965.

Kaplan, R. S. "Variable and Self Service Costs in Reciprocal Allocation Modles." The Accounting Review. October 1973.

Livingstone, J. L. "Matrix Algebra and Cost Allocation." The Accounting Review. July 1968.

_____. "Input-Output Analysis for Cost Accounting, Planning and Control." The Accounting Review. January 1969.

_____. "Input-Output Analysis for Cost Accounting, Planning and Control: A Reply." The Accounting Review. April 1973.

Manes, R. P. "Comment on Matrix Theory and Cost Allocation." The Accounting Review. July 1965.

Manne, A. S. "A Linear Programming Model of the U.S. Petroleum Industry." Santa Monica, California: The RAND Corporation, RM-1757, July 1956.

McCarl, B.; Raphael, D.; and Stafford, E. F. "The Impact of Man on the World Nitrogen Cycle." Journal of Environmental Management. Vol. 3, No. 1 (April 1975).

Mattessich, R. "Mathematical Models in Business Accounting." The Accounting Review. July 1958.

_____. "Towards a General and Axiomatic Foundation of Accountancy." Accounting Research. Vol 8 (October 1957).

Minch, R.; and Petri, E. "Matric Models of Reciprocal Service Cost Allocation." The Accounting Review. July 1972.

Parker, F. "Petroleum Refining Accounting." The Arthur Anderson Chronicle. Vol. 6, No. 2. 1945.

Raatz, W. A. and Spellman, R. A. "Refinery Simulation Procedures for Operating Planning." The Oil and Gas Journal. July 2, 1962.

Richards, A. B. "Input-Output Accounting for Business." The Accounting Review. July 1960.

Russo, J. A., Jr. "Input-Output Analysis for Financial Decision Making." Management Accounting. September 1976.

Schellenberger, R. E. "Criteria for Assessing Model Validity for Managerial Purposes." Decision Sciences. Vol. 5, No. 4. October 1974.

Schendel, D. A.; Summers, J. D.; and Weiss, D. L. Simulation and Model Testing. Institute for Research in the Behavioral, Economic, and Management Sciences, Purdue University, Lafayette, Indiana. Paper No. 220. September 1968.

Schwan, E. S. "Process Costing Via Reaction Accounting." Management Accounting. September 1974.

Sorensen, S. W. and Willis, R. E. An Input-Output Model for Manpower Planning in Large-Scale Systems. Navy Personnel Research and Development Center. San Diego, California.

Stafford, E. F. An Analytical Model of the World Sulphur Cycle. Proceedings and Abstracts, American Institute for Decision Sciences, Fifth Annual Meeting, Western Regional Conference, San Diego, California, March 18-19, 1976. Pp. 166-170.

_____. Technical Validation of a Simulation Model. Presented at the ORSA/TIMS Joint National Meeting, Miami, Florida, November 4, 1976.

_____. An Iterative Procedure for Estimating and Validating Technical Coefficients. Presented at the Annual Meeting of the American Institute of Decision Sciences. San Francisco, California. November 1976.

_____. Techniques of Model Validation. Presented at the SIMSCRIPT and Simulation Conference, Consolidated Analysis Centers, Inc., Washington, D.C., September 20, 1976.

Stormont, D. H. "The 1970 Refinery--How Will it Have Changed?" The Oil and Gas Journal. April 6, 1964.

Trueblood, R. M. "Operation Research and Its Implications for the Accounting Profession." The Journal of Accounting. Vol. 109, No. 5. May 1960.

Waters, S. K. "Oil Refinery Accounting." The National Association of Cost Accountants Bulletin. Vol. XXIV, No. 1. September 1942.

Williams, T. H.; and Griffin, C. H. "Matric Theory and Cost Allocation." The Accounting Review. July 1964.

Withey, J. V. "Computer Techniques for Refinery Planning and Control." The Oil and Gas Journal. January 20, 1964.

Reports:

Anthony, Robert L. Refinery Joint and By-Product Costing. Accounting Papers of the Eleventh Annual Conference of Accountants. Tulsa: The University of Tulsa, 1957.

Financial Accounting and Reporting in the Extractive Industries. Comments to the Financial Accounting Standards Board. New York: Arthur Young & Company, 1977.

Modeling Techniques for Community Development. National Academy of Sciences. Washington, D.C., 1975.

APPENDIX

This appendix includes a summary of the refinery's data pertaining to the years of 1975 and 1976. These data were originally obtained from the refinery in the form of production reports. Production reports are prepared, in the refinery, on a monthly basis.

The first five tables of this appendix were prepared directly from the production reports. Information included in these five tables represents primary data as related to refinery activities.

The last two tables, Tables A-6 and A-7 which include the total amount started into process on a month by month basis for the years 1975 and 1976, were constructed by the writer based on direct information obtained from the refinery's production reports. The last two tables were constructed in this manner in accordance with the assumptions made in building the refinery's model.

TABLE A-1

Refinery Production During 1975
(Quantities Expressed in Barrels of 42 U.S. Gallons @60°F.; B.S.&W. Free)

Product	HFO	ADO	KEROS	NAPH	PMOG	RMOG	Total for Month
January	36,700	28,593	7,388	5,625	6,239	3,739	88,284
February	35,188	23,521	6,731	8,258	8,247	3,006	84,951
March	107,970	74,358	26,519	15,981	28,197	14,556	267,581
April	110,466	73,980	31,404	16,977	27,317	12,583	272,727
May	80,885	56,634	16,085	25,892	17,596	3,023	200,115
June*	--	--	--	--	--	--	--
July	46,591	32,276	4,660	15,904	5,650	4,624	109,705
August	115,374	65,297	31,580	9,643	35,805	15,066	272,765
September	116,906	68,390	28,881	9,281	29,914	16,837	270,209
October	124,073	71,045	34,011	10,233	33,523	20,487	293,372
November	121,285	71,782	33,966	12,202	33,859	15,095	288,189
December	128,967	74,103	35,829	16,650	32,619	16,330	304,498
Total per Year	1,024,405	639,979	257,054	146,646	258,966	125,346	2,452,396

*Refinery did not operate during the month of June 1975 because of some technical problems.

TABLE A-2

Refinery Production During 1976
(Quantities Expressed in Barrels of 42 U.S. Gallons @60°F.; B.S.&W. Free)

Product	HFO	ADO	KEROS	NAPH	PMOG	RMOG	Total for Month
January	110,484	69,901	30,667	14,772	25,551	15,620	268,995
February	118,508	74,522	33,624	15,409	27,511	16,827	286,401
March	108,623	78,135	28,093	12,733	39,632	4,521	271,737
April	116,343	77,754	38,098	16,603	38,947	13,944	301,689
May	107,305	77,424	27,725	15,467	31,146	13,682	273,249
June	118,025	82,453	37,422	19,699	30,417	19,328	307,344
July	109,251	82,281	34,212	12,210	31,297	20,701	289,952
August	87,411	68,079	22,155	17,748	31,519	1,810	228,722
September	110,205	75,081	35,928	14,353	25,319	25,449	286,335
October	116,058	79,525	37,862	19,323	32,563	15,476	300,801
November	111,384	73,933	36,236	19,616	28,086	16,264	285,519
December	114,739	80,264	39,278	21,801	35,318	8,795	300,195
Total per Year	1,328,336	919,352	401,300	200,234	379,306	172,417	3,400,945

TABLE A-3

Refinery Sales During 1975
(Quantities Expressed in Barrels of 42 U.S. Gallons @60°F.; B.S.&W. Free)

Product	HFO	ADO	KEROS	NAPH	PMOG	RMOG	Total for Month
January	34,471	28,593	7,388	5,625	6,239	3,739	86,055
February	32,968	23,521	6,731	8,258	8,247	3,006	82,731
March	101,128	74,358	26,519	15,981	28,197	14,556	260,739
April	103,496	73,980	31,404	16,977	27,317	12,583	265,757
May	75,692	56,634	16,085	25,892	17,596	3,023	194,922
June*	--	--	--	--	--	--	--
July	43,813	32,276	4,660	15,904	5,650	4,624	106,927
August	108,343	65,297	31,580	9,643	35,805	15,066	265,734
September	109,899	68,390	28,881	9,281	29,914	16,837	263,202
October	116,562	71,045	34,011	10,233	33,523	20,487	285,861
November	113,863	71,782	33,966	12,202	33,859	15,095	280,767
December	121,272	74,103	35,829	16,650	32,619	16,330	296,803
Total per Year	961,507	639,979	257,054	146,646	258,966	125,346	2,389,498

*During this month refinery was shut down and there were no sales.

TABLE A-4

Refinery Sales During 1976
(Quantities Expressed in Barrels of 42 U.S. Gallons @60°F.; B.S.&W. Free)

Product	HFO	ADO	KEROS	NAPH	PMOG	RMOG	Total for Month
January	102,204	69,901	30,667	14,772	27,551	15,620	260,715
February	109,685	74,522	33,624	15,409	27,511	16,827	277,578
March	100,267	78,135	28,093	12,733	39,632	4,521	263,381
April	107,121	77,754	38,098	16,603	38,947	13,944	292,467
May	98,868	77,424	27,725	15,967	31,146	13,682	264,812
June	108,493	82,453	37,422	19,699	30,417	19,328	297,812
July	100,285	82,281	34,212	12,210	31,297	20,701	280,986
August	80,199	68,079	22,155	17,748	31,519	1,810	221,510
September	101,473	75,081	35,928	14,353	25,319	25,449	277,603
October	106,709	79,525	37,862	19,323	32,563	15,476	291,458
November	102,448	73,933	36,236	19,616	28,086	16,264	276,583
December	105,365	80,264	39,278	21,801	35,318	3,795	290,821
Total per Year	1,223,117	919,352	401,300	200,234	379,306	172,417	3,295,726

TABLE A-5

HFO Consumed in Production and Production Losses for 1975 and 1976
(Quantities Expressed in Barrels of 42 U.S. Gallons @60°F.; B.S.&W. Free)

	HFO Consumed in Production		Production Losses	
	1975	1976	1975	1976
January	2,229	8,280	862	6,987
February	2,220	8,823	3,849	7,682
March	6,842	8,356	6,119	6,806
April	6,970	9,222	6,081	5,715
May	5,193	8,437	7,617	7,984
June*	--	9,532	--	10,381
July	2,778	8,966	1,406	8,923
August	7,031	7,212	8,477	11,668
September	7,007	8,732	10,084	4,717
October	7,511	9,349	7,085	10,813
November	7,422	8,936	8,706	12,350
December	7,695	9,374	3,321	12,269
Total per Year	62,898	105,219	63,607	106,295

*The refinery was shut down during the month of June 1975.

TABLE A-6

Amount Started into Production in Each Process During the Year 1975
(Quantities Expressed in Barrels of 42 U.S. Gallons @60°F.; B.S.&W. Free)

Process	I	II	III	IV	V	VI	VII
January	89,146	28,593	7,388	16,465	9,978	6,239	3,739
February	88,800	23,521	6,731	23,360	11,253	8,247	3,006
March	273,700	74,358	26,519	64,853	42,753	28,197	14,556
April	278,808	73,980	31,404	62,958	39,900	27,317	12,583
May	207,732	56,634	16,085	54,128	20,619	17,596	3,023
June*	--	--	--	--	--	--	--
July	111,111	32,276	4,660	27,584	10,274	5,650	4,624
August	281,242	65,297	31,580	68,991	50,871	35,805	15,066
September	280,293	68,390	28,881	66,116	46,751	29,914	16,837
October	300,457	71,045	34,011	71,328	54,010	33,523	20,487
November	296,895	71,782	33,966	69,862	48,954	33,859	15,095
December	307,819	74,103	35,829	68,920	48,949	32,619	16,330
Total per Year	2,516,003	639,979	257,054	594,565	384,312	258,966	125,346

*Refinery was shut down during this month.

TABLE A-7

Amount Started into Production in Each Process During the Year 1976
(Quantities Expressed in Barrels of 42 U.S. Gallons @60°F.; B.S.&W. Free)

Process	I	II	III	IV	V	VI	VII
January	275,982	69,901	30,667	64,930	43,171	27,551	15,620
February	294,083	74,522	33,624	67,429	44,338	27,511	16,827
March	278,543	78,135	28,093	63,692	44,153	39,632	4,521
April	307,404	77,754	38,098	75,209	52,891	38,947	13,944
May	281,233	77,424	27,725	68,779	44,828	31,145	13,682
June	317,725	82,453	37,422	79,825	49,745	30,417	19,328
July	298,875	82,281	34,212	73,131	51,998	31,297	20,701
August	240,390	68,079	22,155	62,745	33,329	31,519	1,810
September	291,052	75,081	35,928	69,838	50,768	25,319	25,449
October	311,620	79,525	37,862	78,175	48,039	32,563	15,476
November	297,869	73,933	36,236	76,316	44,350	28,086	16,264
December	312,464	80,264	39,278	78,183	44,113	35,318	8,795
Total per Year	3,507,240	919,352	401,300	858,252	551,723	379,306	172,417