UNIVERSITY OF OKLAHOMA

GRADUATE COLLEGE

A MODULAR APPROACH TO THE DEVELOPMENT OF A PRODUCT PLATFORM FOR MECHANICAL SEAL CHARACTERIZATION

A THESIS

SUBMITTED TO THE GRADUATE FACULTY

In partial fulfillment of the requirements for the

Degree of

MASTER OF SCIENCE

By

RICHARD PERRY
Norman, Oklahoma
2020

Downloaded from SHAREOK. Persistent Handle URL: https://hdl.handle.net/11244/325267

A MODULAR APPROACH TO THE DEVELOPMENT OF A PRODUCT PLATFORM FOR MECHANICAL SEAL CHARACTERIZATION

A THESIS APPROVED FOR THE
SCHOOL OF AEROSPACE AND MECHANICAL ENGINEERING

BY THE COMMITTEE CONSISTING OF

Dr. Zahed Siddique, Chair

Dr. Yingtao Liu

Dr. Hamidreza Shabgard

Dr. Raghu Madhavan

© Copyright by RICHARD PERRY 2020
All Rights Reserved.

ACKNOWLEDGEMENTS

I would like Dr. Zahed Siddique for his constant support through my college career. He has a calming effect during stressful times, and I consider myself fortunate to call him my mentor and advisor. I would also like to thank Dr. Raghu Madhavan. He supported my research and provided any technical support and expertise required throughout my studies. I consider myself fortunate to call him a mentor. I would like to thank Dr. Liu Yingtao, Dr. Hamidreza Shabgard for taking the time to serve on my committee.

I would like to thank Jon Keegan, Brandon Mansur, and Olga Umanskaya. They made my graduate studies and projects enjoyable. I consider them all great friends and cherish the countless memories. I would like the thank Madhumitha Ramachandran for her help and statistical brilliance. It was a pleasure to share a lab with her. I would like to thank Billy Mays and Greg Williams for all their constant support in the machine shop. The university is fortunate to have them, and I consider them good friends.

Thank you to all my family and friends who made this possible. A special thank you to my mother. Her mental and physical toughness is something I will always admire.

Richard Perry: "I feel like I'm in a sinking ship and my job is to steer it to shore."

Dr. Zahed Siddique: "I feel like it's my job to figure out how to breathe underwater."

TABLE OF CONTENTS

ACKNOWLEDGEMENTS iv
LIST OF TABLES vii
LIST OF FIGURES viii
ABSTRACT x
CHAPTER 1 1
INTRODUCTION 1
1.1 RESEARCH MOTIVATION 1
1.2 RESEARCH SCOPE 2
1.3 PRODUCT PLATFORM AND FAMILY EXAMPLE 3
1.4 OVERVIEW OF APPROACH 6
CHAPTER 2 10
LITERATURE REVIEW 10
2.1 INTRODUCTION 10
2.2 DEVELOPMENT OF PRODUCT FAMILY AND PLATFORM 10
2.3 MODULAR PLATFORM DESIGN 12
2.4 MECHANICAL SEALS 13
2.5 OPERATION OF MECHANICAL SEALS 16
CHAPTER 3 21
ARCHITECTURAL AND FUNCTIONAL DESIGN (STEP 1-3) 21
3.1 INTRODUCTION 21
3.2 FUNCTION REQUIREMENTS FOR FAMILY MEMBERS (STEP 1) 23
3.3 DEVELOP AGGREGATE MODULAR ARCHITECTURE DIAGRAM (STEP 2) 25
3.4 CONFIGURATION DESIGN OF FAMILY MEMBERS (STEP 3) 27
CHAPTER 4 30
EVALUATE FAMILY MEMBER COMMONALITIES (STEP 4) 30
4.1 INTRODUCTION 30
4.2 MODULES WITH SAME PARAMETERS (STEP 4A) 31
4.2.1 DATA ACQUISITION AND CONTROLS 32
4.2.2 VOLUME DISPLACEMENT ASSEMBLY 35
4.2.3 PRESSURE SENSOR (PX429-250GI) 41
4.2.4 USER INTERFACE (LabVIEW) 42

4.3 MODULES WITH DIFFERENT PARAMETERS (STEP 4B) 43
4.3.1 MOTOR AND CONTROLLER 43
4.3.2 TEST CHAMBER ROTATION 46
CHAPTER 5 49
PHYSICAL SETUPS (STEP 5) 49
5.1 INTRODUCTION 49
5.2 MECHANICAL SYSTEMS 50
5.3 ELECTRICAL SYSTEMS 59
CHAPTER 6 61
PRODUCT FAMILY PERFORMANCE (STEP 6) 61
6.1 INTRODUCTION 61
6.2 COMPARE PHYSICAL SETUP WITH FUNCTIONAL REQUIREMENTS 61
6.3 TEST DATA 63
CHAPTER 7 66
CONCLUSIONS AND RECOMMENDATIONS 66
7.1 CONCLUSIONS 66
7.2 FUTURE WORK AND LIMITATIONS 68

LIST OF TABLES

Table 1: Family Member Functional Requirements (Bold functions have different parameters)..... 23

LIST OF FIGURES

Figure 1: Steps Required for Approach Overview 7

Figure 2: Conceptual Platform Development 9

Figure 3: Comparison of Modular and Integral Components 13

Figure 4: Mechanical seal nomenclature [8] 14

Figure 5: Hydraulic Forces. Source Flowserve 16

Figure 6: Pressure and temperature deflections. Source Flowserve 18

Figure 7: Approach steps addressed in Chapter 3 21

Figure 8: Architecture and Function Diagram 22

Figure 9: Aggregate Module Structure 26

Figure 10: Shared Module Architecture 27

Figure 11: Family Member 1 Mechanical Schematic 28

Figure 12: Family Member 2 Mechanical Schematic 29

Figure 13: Approach steps in Chapter 4 31

Figure 14: cDAQ Chassis: (1) USB Connector, (2) TRIG 0 and 1 BNC Connector, (3) USB Cable Strain Relief, (4) Power Connector, (5) Module Slots, (6) Installed Modules, (7) Chassis Grounding Screw - Source http://www.ni.com/pdf/manuals/372838e.pdf 33

Figure 15: cDAQ Module Configuration 34

Figure 16: Piston Accumulator Mechanical Schematic 36

Figure 17: Analog output options for MTS sensor - Source: http://www.mtssensors.com/fileadmin/media/pdfs/Products/Industrial/G_Series_GP_GH_Analog_DPulse.pdf 37

Figure 18: Assembly image of displacement sensor 39

Figure 19: Image showing stroke length 40

Figure 20: User Interface (Family Member 2) 43
Figure 21: Family Member 1 Servo and Drive Combination [14] 44
Figure 22: Family Member 2 Servo and Drive Combination [15-19] 45
Figure 23: Family Member Test Chamber Comparison 46
Figure 24: Vacuum Fill Schematic 48
Figure 25: Approach Step in Chapter 5 49
Figure 26: Mechanical Subsystems (Right Image: Family Member 1, Left Image: Family Member 2) 50
Figure 27: Tabletop Assembly (Family Member 1) 51
Figure 28: Tabletop Assembly (Family Member 2) 52
Figure 29: Rotating mechanism - Left horizontal position, Right vertical position (Family Member 1) 53
Figure 30: Rotating Mechanism (Family Member 2) 54
Figure 31: Framing (Family Member 1) 55
Figure 32: Family Member 1 Fabricated Assembly 56
Figure 33: Family Member 2 Fabricated Assembly 57
Figure 34: Family Member 1 Electronics: (1) 3PH Shutoff, (2) Motor Controller, (3) Data Acquisition, (4) AC to DC PS, (5) Signal Conditioner 59
Figure 35: Family Member 2 Electronics: (1) 3PH Shutoff, (2A-2D) Motor Controller Components, (3) Data Acquisition, (4) AC to DC PS, (5) Signal Conditioner 60
Figure 36: Approach Step in Chapter 6 61
Figure 37: Family Member 1 Plumbing Leak Test 63
Figure 38: Family Member 1 Experiment 64
Figure 39: Family Member 2 Data 65

ABSTRACT

Sealing technology is critical for all industries – especially in the oil and gas industry. This technology can be broadly defined as the ability to prevent unwanted material from freely flowing into a reservoir. This is critical in extending the life of rotating dynamic systems such as bearings found in compressor or pumps. The oil and gas industry must maintain rotating equipment for several critical applications during drilling and production. Since many of the fluids in this field can be flammable or toxic, the ability to consistently limit the movement of this media in dynamic applications is not only critical for extending the life of equipment, but also the operators. Polymers are cost effective and often used in dynamics applications, but harsh environmental conditions related to surface speed or temperature can limit their application. This limitation found in the dynamic application of polymers has created a demand for the development of mechanical seals.

Mechanical seals are the topic of this thesis. Even with the advent of modern engineering simulation software, experimental evaluation of mechanical sealing technology is still critical. Since materials are in a constant state of development, familiar standards such as API or ASME cannot keep up with industry demand. It is the lack of standardization that creates the need for mechanical seal characterization equipment. Since mechanical seals are used in a wide range of applications, the ability to create a family of products that can characterize a variety of rotary seals can be beneficial.

This thesis will attempt to address the following research questions:

RQ1: How to develop a modular product platform for rapid deployment of equipment for mechanical seal characterization?

RQ2: How does modular and physical commonality relate to each other using a platform approach for characterization of mechanical seals?

These questions were addressed through the development of a modular product platform and the fabrication of the family of products while taking advantage of commonalities found in the product platform development. Addressing modular commonalities can prevent a duplication of efforts and provide economy of scale in the design and manufacture throughout the life of this family of products.

In this thesis two systems are designed for mechanical seal characterization using a product family approach. After the family members are fabricated, the systems will be commissioned to demonstrate an ability to characterize mechanical seals. This thesis finds a strong correlation between modular and physical commonalities.

A future direction for this research would be developing a modular product platform for characterization of all sealing technology – not just rotary. The key parameters and metrics of all sealing technology are similar: temperature, pressure, surface footage, and leakage. The ability to rapidly prototype characterization equipment for all sealing technology can benefit research in this lab and industry in general.

CHAPTER 1

INTRODUCTION

1.1 RESEARCH MOTIVATION

The subject of sealing technology is broad and foundational to any industry. The ability to consistently constrict the flow of unwanted gas, fluid, or solids from freely moving across a boundary is crucial in mechanical design. Several categories fall under the terminology of sealing technology such as static, rotary, and reciprocating seals. A common seal that most are familiar with would be called an O-ring. Even though O-rings are used in static, rotary, and reciprocating applications, they are limited by environmental conditions. These conditions include temperature, linear and rotational speed, or pressure, and all seal types have environmental restrictions.

Several critical applications of sealing technology can be found in the oil and gas industry. Rotating equipment found in pumps and compressors are used throughout several processes in the industry such as production, processing, and transporting. In oil and gas industry, the media that the rotating equipment is expected to seal is often toxic and flammable at various temperatures and pressures. The performance of the seals in rotating equipment, to prevent debris from invading compartments that house bearings or other critical components, is important to the life of the equipment and safety of the operators.

The wide range of operational and environmental conditions that rotating equipment is expected to perform in requires the application and development of new seal materials. This wide range of operating conditions makes it harder to develop applicable standards or performance data, which prevents the industry from making data driven decisions. This thesis is going to address the

issue of gathering data on seal performance, during a range of extreme operational conditions, through an approach to design setups for testing rotating seals using a platform approach.

1.2 RESEARCH SCOPE

The changes in operating conditions mechanical seals are exposed to vary depending on the piece of equipment. Even with the varying operational conditions, the factors required for characterization will be the same across an entire family of seals. These factors include rotation speed, volume displacement, temperature, and pressure. It is the shared factors in rotary seals that inspired a platform-based approach to the design.

A platform-based approach has been used in consumer products to provide variety and meet customer requirements. We hypothesize, that the same approach can be used in rapid design of rotary seal characterization set-ups. The goal of this work is to provide a proven product platform that can be used for future set-up development in the lab or in the field.

1.3 PRODUCT PLATFORM AND FAMILY EXAMPLE

Before providing an overview of proposed approach, it would be helpful to review an industry example of platform development. The business end of handheld power tools is interchangeable in today's market, but this was not always true. Hand-held power tools used to be designed individually without a platform approach which lead to high labor, inventory, and manufacturing costs. Black and Decker was the first company to take a platform approach to their line of products. Overall concepts found in Black and Decker's redesign of their power tool product line will be applied and integrated in approach.

A well-documented successful product family and platform development project would be Black and Decker's revamp of their power tool product line in the 1970's. The business end of a power tool must provide multiple functions and operate in a range of conditions like sealing technologies are required to function and perform in a variety of environments. Developing a product family and platform provides the ability to quickly and economically create a family of products to operate in these varying conditions.

In the 1970's Black and Decker was an established company in the power tool market with a broad portfolio consisting of drills, jigsaws, shrub and hedge trimmers, power hammers, circular saws, grinders and polishers, finishing sanders, and edgers [1]. Black and Decker's portfolio of power tools grew to what it was in 1970 by introducing each unique product one at a time with little thought given to economies associated with shared componentry or manufacturing processes [1]. Through the years the lineup of power tools had grown into an incoherent collection of technology, designs, and materials [1]. For example, their lineup of power tools consisted of thirty unique electric motors with 60 unique motor housing required to accommodate the variety of power and application needs [1]. Black and Decker also relied on 104 armatures that connect the

electric motor to the end of the tool such as the drill bit or saw blade [1]. Since each of the unique armatures required its own tooling, switches, and buttons, the manufacturing and assembly processes were not economical and populated Black and Decker's bill-of-materials and parts bins [1]. In order to manage the thousands of unique parts, the company required thousands of square feet of stocking space with hundreds of employees to manage this inventory [1]. The inept line of products translates into higher overhead associated with dedicated production lines or recurring and costly line changeovers [1].

Despite these inefficiencies, Black and Decker had grown into a successful company in the power tool market with 20 percent market share worth approximately 200 million in revenue annually [1]. Even though the company found themselves in a comfortable position, the managers and leadership within the company saw three future hurdles headed their way: (1) overseas manufacturers were starting to attack domestic markets, (2) profit margins were dropping due to labor and material cost, and inflation, (3) future regulations were going to require backup insulation around electric motors to prevent electrical shock [1]. Black and Decker understood the consequence of ignoring these threats on the horizon and that it needed to be tackled with big change [1]. They also knew that their competition shared these same threats and that if they could were able to respond quickly it would turn into an opportunity to grab a larger market share [1].

The stimulant for the overhaul of Black and Decker's entire power tool portfolio was the need to implement double insulation into all their power tools [1]. Management began this project with an intelligible goal: (1) simultaneously redesign entire power tool portfolio, (2) redesign of the entire manufacturing process with an emphasis on reducing cost, (3) implement double insulation in power tool portfolio for customers without price increases [1]. The end goal of this product line overhaul would be that all present power tool product lines would be forsaken [1].

One of the more important decisions made by the senior management team at Black and Decker was to concentrate the resources of the company towards the task of creating a product platform with minimal efforts remaining on the development of their current product line [1]. A retired executive from the company at this time stated "We bet the company, but if we hadn't, there wouldn't have been a company by the end of the decade." [1].

The first step in the overhaul required the company to build a common product platform to support the new generation of power tools [1]. An example of this would be the electric motor which would be considered a critical subsystem that would be shared across tools in the platform [1]. By keeping the axial diameter of all the electric motors the same and only allowing variation in the length, a common motor housing could be shared among the platform and power requirements could be adjusted through the length of motor [1]. This standardization of motors in the platform allowed the company to produce all motors on an automated production line that reduced labor cost by 85 percent [1].

The standardization and modularization of the motors was just the beginning. The company took the same approach to each subsystem of the entire power tool platform such as gears, armatures, and even power cords [1]. This allowed them to leverage better pricing from vendors due to higher volumes associated with standardization [1]. 1970 failure rates for small appliances fell in the range of 6 to 10 percent and with the development of this new platform field failure rates dropped to nearly 1 percent [1]. Modularization and standardization also allowed Black and Decker to decrease cycle times for new product derivatives and the flexibility to move on from new product derivative that were unsuccessful [1]. The ability move from failed product derivatives after they had reached maturity without the loss of special tooling or equipment gave

marketing personal and managers the flexibility to move on from unsuccessful product derivatives quickly [1].

1.4 OVERVIEW OF APPROACH

Many approaches or methodologies have been developed for product design. The overlap between these different design concepts is significant and what differentiates them is unclear [2]. The approach in this research focuses on the steps required to develop a modular product platform for characterization equipment and how to validate the product against the functional requirements. Traditionally modules in product platforms can be found through various methods of functional decomposition, and it is after the decomposition that the modules are sectioned together [3]. This research will use product architecture and focus on modular identification due to limited products

required for characterization. Figure 1 outlines the overview of the approach that was applied in this thesis.

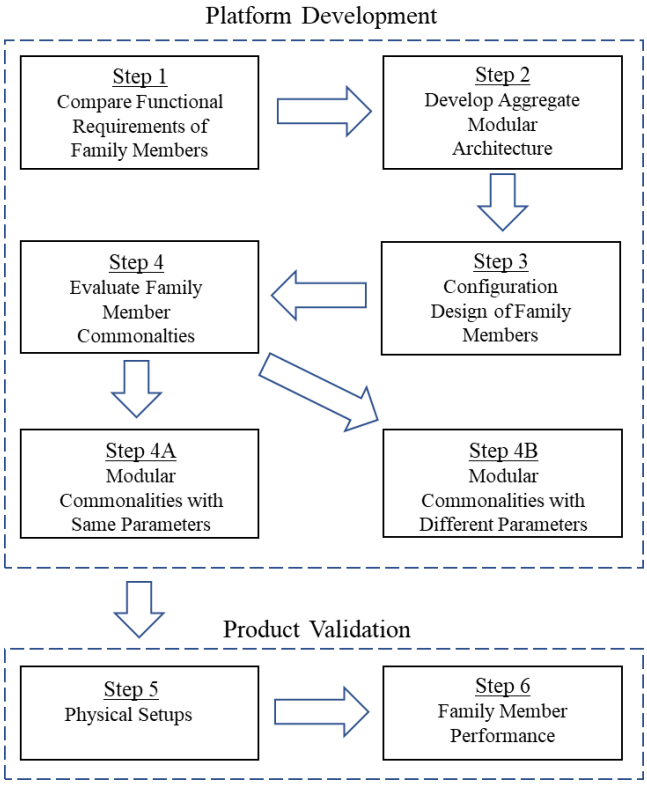

Figure 1: Steps Required for Approach Overview

The steps in the development and validation of a proposed product platform are discussed in detail below.

- **Step 1 (Section 3.2): Compare Functional Requirements for Family Members:** This step allows direct comparison of functional requirements between the two setups by creating a table that aligns the rows by similar functions and columns by parameters. This row alignment by similar function allows for ease of direct comparison between the family members.
- **Step 2 (Section 3.3): Develop Aggregate Modular Architecture:** This step generates a function diagram that tracks the material, energy, and signal usage of the family members.

The idea is to adapt all family members into a modular flow chart that is accurate for all family members in the platform.

- **Step 3 (Section 3.4): Detailed Design of Family Members:** During this step, a shared modular architecture is developed. The architecture will identify shared modules in the product platform. The architecture developed will find the intersection between family members in the platform. It is from this shared modular diagram that the mechanical schematics for each family member can be generated.
- **Step 4 (Chapter 4): Evaluate Family Member Commonalities:** This step focuses on evaluating the shared and unique modules found in Step 3. If modules in the Step 3 are shared, then they are considered modules with the same parameters. For the purpose in this thesis, the modules with the same parameters will have standardized components. If the modules are unique in the shared module architecture, they are considered modules with different parameters. For the purpose in this paper, the modules with different parameters are interchangeable throughout the product platform.
- **Step 5 (Chapter 5): Physical Setups:** This step takes place after the product platform has been developed. Before any fabrication can take place, the main subsystems will need to be modeled to ensure the operational requirements can be demonstrated.
- **Step 6 (Chapter 6): Family Member Performance:** The last step takes place after final assembly of the setup. When the setup is fully assembled the functional requirements can be checked and demonstrated.

Figure 2 is another way to conceptualize platform development. This happens at a functional, architectural, and embodiment level understanding of a product family. First a functional level understanding of the family of products is tabulated before product family modules can be identified. Once the product functions are understood, an architecture level understanding for the family can be developed. The last stage is considered the embodiment level where the modules identified in the architecture can be designed for implementation.

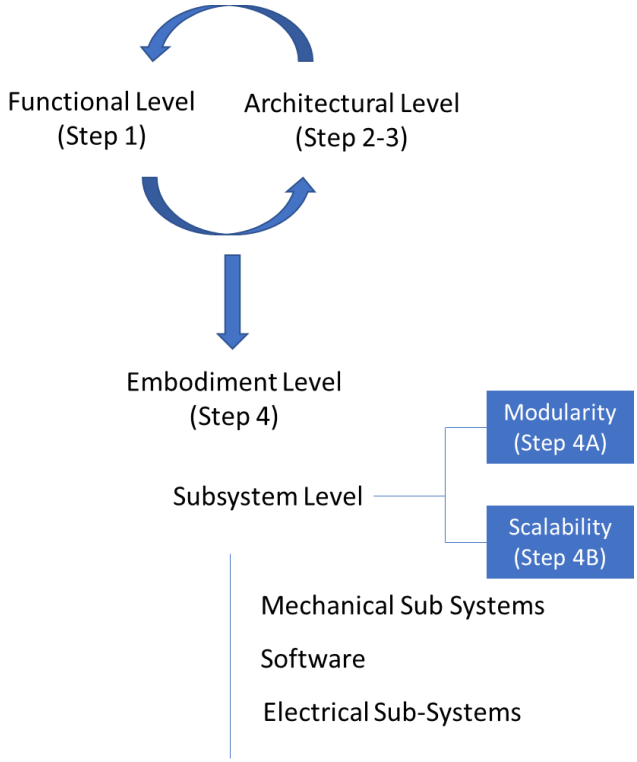

Figure 2: Conceptual Platform Development

CHAPTER 2

LITERATURE REVIEW

2.1 INTRODUCTION

In the last chapter we discussed the expectation of mechanical seals to perform in harsh environments and the importance of gathering performance data in these conditions. The need for this data from different seals in various operating conditions reveals demand for rapid setup deployment using a product family approach. This information in this section is important since it will be utilized in the family of products and platform development used for characterization equipment in this thesis.

2.2 DEVELOPMENT OF PRODUCT FAMILY AND PLATFORM

Generally, a product family is a range of products that share common components or technologies (e.g., modules, subsystems, manufacturing processes) but target a variety of potential market interests [4]. In other words, a product family can be defined as individual products that share common components or technology that address common market applications [1]. It would be inefficient and costly for a company to design and produce each product separately to address range of customer needs. A product family approach can be used to mitigate time and cost challenges. In fact, product families should be planned such that a number of derivative products can be efficiently created from a common core technology or foundation [1]. The foundation of derivative products is defined as the product platform, which is a set of subsystems that form a similar structure from which a flow of derivative products can be efficiently developed and produced [1]. This platform approach to developing products can reduce the cost of manufacturing

drastically and provides economies through the sharing of materials, components or technologies across the product platform [1].

The modern day interconnected global economy is one of the many factors that has renewed and continued interest in product and family platforms [4]. Industry interest is in a constant state of change and it can be difficult to forecast future interests. The ability to create a product platform can help mitigate the costs associated with customer and industry changes. A trade-off will quickly emerge with an increase in product variants: satisfying a wider customer base may lead to more sales, but at increased costs which reduces profitability [4].

The research related to the development of a product platform, focus on families of products that are manufactured in large quantities. It is true that the large quantities associated with these product families provide a greater potential of total economic saving when compared to lower quantity families, but the product platform can be worth developing in either case. One such lower quantity family would be in the development of experimental set-ups required for product and material characterization, especially as it relates to the imitation of operational conditions. Certain products can be used in multiple operational conditions, so the ability to adapt and change these conditions is an important consideration in the development of these experimental set-ups. This small quantity product platform for characterization set-ups can benefit economics differently that large quantity.

Large quantity product development has the benefit of sharing a platform across multiple product families. This can reduce manufacturing complexities and provides economies of scale that reduce costs associated with materials. An example of a potential benefit of reducing manufacturing complexity might be the ability to manufacture two or three products on the same assembly line versus just one. In the case of product or material characterization set-ups, small

quantity platform development provides economics in different ways. An example of one of these benefits might be the ability to make data-driven decisions based on the information collected from the set-up or find that the product or material tested can operate outside the traditional parameters.

2.3 MODULAR PLATFORM DESIGN

The definition of modularity will differ depending on what the designer considers ideal [5], but if someone considers modularity as the use of common components across multiple products, then the idea of modularity in product design is well over a century old. Henry Ford standardized a single product series, but the idea of standardizing automotive components such as wheel sizes, bearings, axles, and fuel systems across a family of automobiles came about in 1914 [6]. Unique designs are not commonplace in today's economy. It is much more likely that modern projects are simply modified or altered design of the past. General Electric claims that 85% or their development projects are simply modification projects [7].

The ability to identify common modules in a product platform that can be shared across a family of products provides economics and the ability to introduce new product variants at a faster rate [5]. Some examples of these cost savings in modular platform design is through standardization of components and customization through interchangeability of modules between family members. Standardization of components provides economics through inventory and labor reduction, whereas customization through interchangeability of modules allows the family of products to appeal to a larger customer base. Figure 3 shows a comparison between modular and integral components.

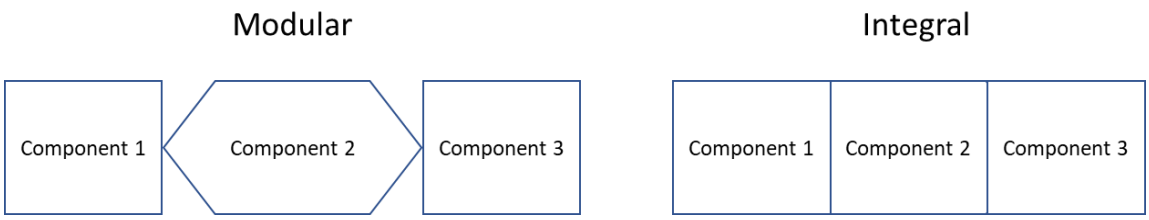

Figure 3: Comparison of Modular and Integral Components

A physical comparison between integral and modular components in a product would be found in a laptop and a desktop computer. A laptop would be considered an integral product when compared to a modular desktop computer. With a desktop computer, the consumer has the ability of choosing a monitor, keyboard, and internal components in the tower. The modular design and standardization of components found in desktop computers leads to significantly lower cost for similar performance when compared to laptops. The integral design of laptops leads to fewer customization options and higher associated costs.

2.4 MECHANICAL SEALS

A mechanical seal is generalized as a dynamic seal where the flat radial faces of the seals, one that is static and the other rotates, are held in contact with a combination of force from system pressure and a spring [8]. The static component of the mechanical seal can be precision located in a housing where the rotary component is spring loaded and floating on the shaft that allows for misalignments in the system while maintaining the proper sealing contact [8]. These type of seals have become the primary choice for containing fluids in a dynamic sealing application around a rotating shaft such as in centrifugal pumps, mixers and compressors [8]. A variety of designs and

seal combinations exist for specific applications that accommodate different production rates, such as washing machines or one-off specialty applications like high-pressure pumps [8].

Mechanical seals are divided into three broad categories by how they load the faces together and how the quasi-static mechanism seals around the rotating shaft – the quasi-static seal is often referred to as secondary sealing. [8]. These three categories include elastomer-bellow seals, pusher seals, and metal-bellow seals. In pusher seals and elastomer-bellow seals the loading that creates the contact pressure at the sealing interface is created by some form of metal spring [8]. The secondary sealing in a pusher seal is created with an O-ring, where the secondary seal for an elastomer-bellow seal is created by the elastomer bellow itself [8]. A benefit of the metal-bellow seal is that the bellow itself acts as the spring and the secondary seal around the shaft [8]. Common nomenclature for pusher seals and bellow seals can be found in Figure 1.

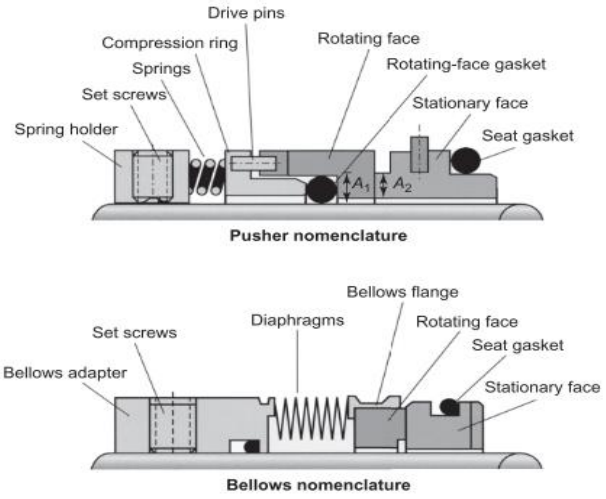

Figure 4: Mechanical seal nomenclature [8]

Typically a pusher seal consists of a stationary face, rotating face, and supplemental components that consist of a gaskets, drive pins, springs, and spring holders that adapt the pusher seal to operating conditions [8]. In many pusher seals designs, the stationary seal is fixed to the housing with a retaining ring and pin and the rotating face is free to move in the axial direction but

is held in place by a spring and spring holder. Since the rotating component of the mechanical seal is free to move in the axial direction, rotating-face gasket is often referred to as a dynamic secondary seal or just secondary seal [8]. Even though other materials can be used, the dynamic secondary seals are often elastomer and are limited by pressure and temperature. The spring holder also sets the compression of the spring that creates the contact pressure at the sealing interface [8].

Metal bellow seals are similar in concept to pusher seal, but the metal bellow acts as the spring that creates the contact pressure at the interface [8]. Unlike a spring, a metal bellow can hold prevent fluid flow and hold pressure. This allows the secondary seal to be incorporated into the bellows adapter, which does not allow axial movement and creates a static seal [8]. Some of the advantages in using static secondary seals would be use in higher temperature and potential different fluid types do to more material choices and design or geometry considerations [8]. Because the metal bellow is often welded or hydroformed into place, it does not require the use of drive pins to transmit the torque from the shaft to rotating face of the mechanical seal [8].

Elastomer bellows are similar in concept to metal bellow mechanical seals, but in place of the metal bellow it would be an elastomer. In some cases, the elastomer bellow acts as the static secondary seal, transmits torque from the rotating shaft to the seal face, and provides the flexibility in the system required for misalignment. The elastomer bellow does not have the ability to provide the axial force required at the sealing interface, so a spring is required to maintain this contact pressure like a pusher seal. An added benefit of the elastomer bellow seal as compared to the pusher seal is that the rubber bellow seal provides a static secondary seal, whereas the pusher seal required a dynamic secondary seal.

Several types of mechanical seals exist. The specific application and environmental conditions will dictate which type is more appropriate. New materials are developed faster than

applicable standards, so the need for characterization is important. The overview of different mechanical seal types and the associated components demonstrates the need for rapid deployment of characterization equipment.

2.5 OPERATION OF MECHANICAL SEALS

The expectation for mechanical seals is long term reliability with minimal leakage. This is a balance between film thickness at the interface and allowable leakage. The thicker the film at the interface the better the lubrication and life of the seal but the trade-off is higher leakage. If the film at the interface is too thin, the seal life is compromised due to excessive heat generation, but the leakage is lower. The thickness of the film at the interface is of similar size to the peaks due to the roughness of the surface [8]. For instance typical fluid film thickness is under 1 micron whereas the typical flatness of the sealing faces is between one or two light bands which translates to 0.3 to 1 micron [8].

To the left in Figure 5 is the rotating face component of a typical pusher seal and to the right would be the stationary face [8]. The rotating component on the left is kept in equilibrium through a combination of the fluid pressure (P_{fluid}), the spring force (F_{spring}), and pressure at the sealing interface (P_{total}) [8].

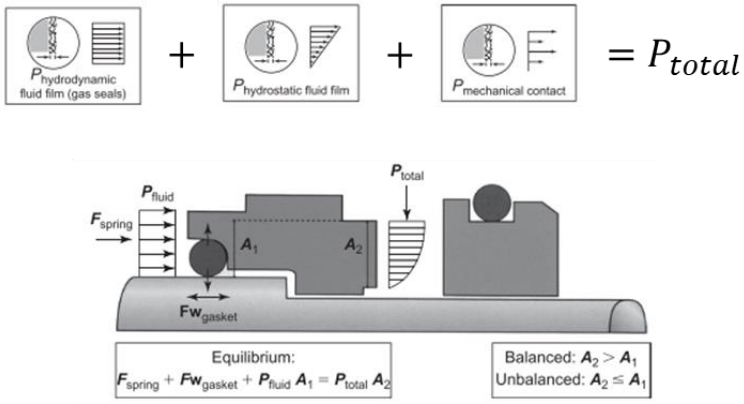

Figure 5: Hydraulic Forces. Source Flowserve

An important factor to consider in the operation of mechanical seals is the hydraulic balance of the rotational component. If A_2 is greater than A_1 then the seal is balanced, but if A_1 is equal to or greater than A_2 then the seal is considered unbalanced and only suitable for lower pressures. Notice in the pusher seal in Figure 4 that A_1 is greater than A_2 this would be an unbalanced configuration. In an unbalanced configuration, an increase in system pressure acts on the sealing face of the seals increasing heat generation and wear. The seal in Figure 5 would be balanced because A_2 or greater than A_1 but notice the step in the shaft that is required for this balanced seal. The associated manufacturing costs with machining the step in the shaft is required for a balanced configuration, but only required with higher pressures [8]. A balanced seal gives the designer the ability to offset system pressures and give better control of deflections shown in Figure 6.

The hydrostatic pressure shown in Figure 5 shows a pressure drop across the seal face that follows a linear trend from system pressure to a gauge pressure of zero. In theory, this linear trend would hold true if no deflections in the seal exist. In other words, if the seal faces were parallel, one would expect a linear decrease in hydrostatic pressure. In practice, there are deflections due to system fluid pressure and temperature that need to be considered. Figure 6 below shows an exaggerated representation of these deflections.

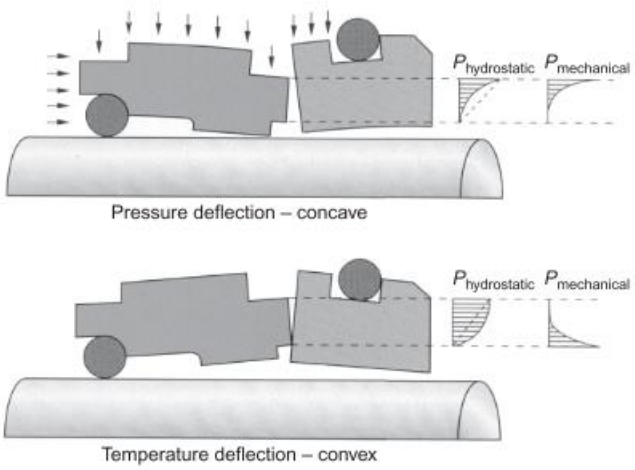

Figure 6: Pressure and temperature deflections. Source Flowserve

As illustrated above, the hydrostatic pressure is dependent on the orientation of the seal faces. If the faces at the interface are parallel under static and zero pressure conditions, deflections shown in the top figure of Figure 6 will be observed with an increase in pressure and rotation. Pressure forces that act on the outside diameter of the seals cause deflections that bend the seal inwards creating an exponential increase and divergence in hydrostatic pressure towards the outside diameter of the sealing interface. The deflections cause lubrication issues along the outside of the seal that can create excessive heat generation and seal material wear because of the reduction of film support. Looking at the bottom figure in Figure 6, the deflection due to temperature tends to open and create mechanical contact on the inside diameter of the seal. Notice the system pressure due to temperature deflection will have an easier time slipping into the sealing interface and providing face separation compared to pressure deflections. The deflections due to temperature and pressure act in opposite directions and will tend to cancel each other out [8].

An understanding of the magnitudes of these deflections is crucial in providing long life and sealing capabilities. Coating choices are critical parameters since it relates to thermal

conductivity at the sealing interface which dictates temperature deflections. Seal material considerations are important in managing the pressure deflections since different materials will have a different modulus of elasticity. There are many other variables such as thermal expansion of seal, geometry considerations of the seal, thermal properties of the fluid, pressure differential, and cooling rate of the system. The compounding effect of these variables results in a complex problem that only until recently can be analyzed using modern FEA technology [8].

Mechanical seal has been the topic of many modern research efforts and likely more than other sealing technologies. This research has provided a better understanding of critical aspects of mechanical seal design such as deflections, heat generation, tribological conditions, and cooling effects around the seal. Modern day mechanical seals have made significant improvements with the use of new materials such as silicon carbide. This material has high modulus of elasticity and thermal conductivity allowing for substantial reduction in temperature and pressure deflections when compared to other materials in use [8].

In face-ended mechanical seals, the hydrodynamic lubrication can be achieved through imperfections in the sealing faces or discontinuities in the mechanical seal [9]. The imperfections can be waviness in the sealing faces not found during the installation but generated by imperfections in the seal balancing, spring loading, or geometric discontinuities such as location of drive pin holes [8]. Many of the seal designs that have been rigorously analyzed are those found in hazardous or rigorous conditions where reliability is critical [8]. In many general and lower pressure applications, the seal material properties are relied on heavily rather than lengthy deflection analysis [8].

An understanding of the operation of mechanical seals is necessary for designing equipment for characterization. All the variables involved in mechanical seal pressure and

temperature deflections effect the performance of the seal. Even with the advent of modern engineering simulation, all the variables involved in mechanical seals makes it difficult to account for all of them without experimental verification.

CHAPTER 3

ARCHITECTURAL AND FUNCTIONAL DESIGN (STEP 1-3)

3.1 INTRODUCTION

As discussed in Section 2.2, a product platform is the foundation that allows a family of products to be efficiently developed and produced. A family of products is derived from a common core of technology, modules, and functional requirements. This chapter focuses on identifying the common modules through an evaluation of functional requirements between the two family members. Figure 7 shows the proposed approach from Section 1.4 with the steps covered in this chapter highlighted in blue.

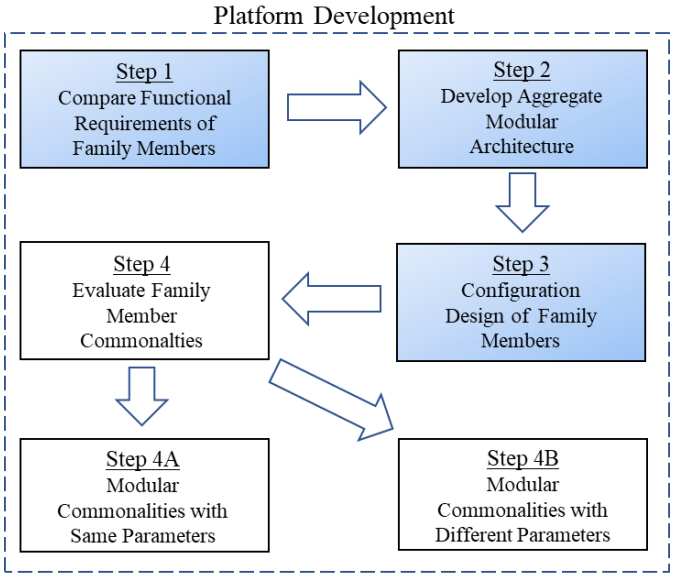

Figure 7: Approach steps addressed in Chapter 3

The proposed process of identifying modular commonalities involves developing an architectural and functional level understanding of the products. In this paper, the first step involved in developing a modular platform is organizing requirements and information in a table that compares the functional requirements of the family members. In this table, similar functions are aligned in

the rows. Since the products in this family are both characterizing mechanical seals, the functional requirements will be similar. The next steps involve creating an aggregate module architecture for characterizing mechanical seals before detailed architecture and mechanical schematics are developed. Figure 8 shows the iterative process that occurs between the functional and architectural level. During the development of the modular architecture, an iterative process of comparing the modules in the architecture to the functional requirements of the family members will take place to ensure the modules satisfy the function requirements.

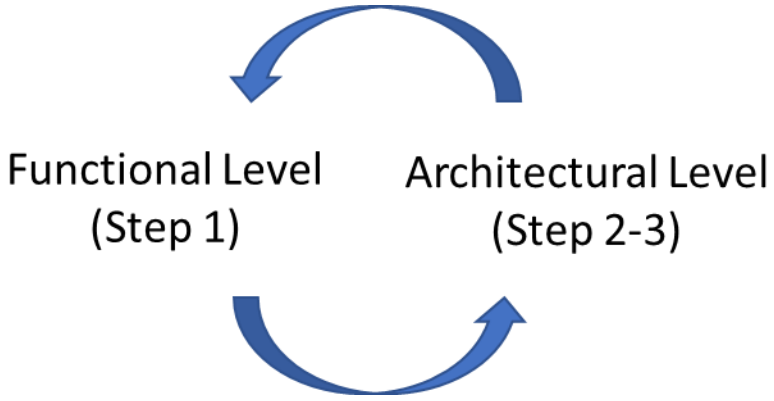

Figure 8: Architecture and Function Diagram

3.2 FUNCTION REQUIREMENTS FOR FAMILY MEMBERS (STEP 1)

The first step in the platform development process is to identify the exact needs of the family members. This section will describe the function requirements related to the characterizing of face-ended mechanical seals for these projects. Some common parameters in characterizing end-faced mechanical seals would be RPM, pressure, temperature, and fluid displacement. Since end-faced mechanical seals can be used in a variety of applications that require sealing around a rotating shaft – such as with mixers, pumps, or compressors, not all parameters will be the same.

The applications for face-ended mechanical seal is broad, the ability to characterize these rotary seals at various speeds, temperatures, and pressures can be beneficial. Table 1 below shows the function requirements for testing different mechanical seals related to this project.

Table 1: Family Member Functional Requirements (Bold functions have different parameters)

Functional Requirement for Family of Products	Family Member 1 Parameter	FM1 Quantity	Family Member 2 Parameter	FM2 Quantity
1. Unidirectionally rotate face-end mechanical seal	**6,000 RPM**	**1**	**10,000 RPM**	**1**
2. Measure fluid volume displacement seal face	<0.5cc/hr	1	<0.5cc/hr	2
3. Ability to measure fluid displacement at 0.5cc/hr for extended period	2 weeks	1	2 weeks	2
4. Regulate pressure in fluid reservoirs	True	2	True	2
5. Log pressure data from reservoir	145 PSI MAX	1	145 PSI Max	2
6. Measure temperature at various locations	True	>1	True	>1
7. Ability to rotate test chamber vertical and horizontal orientations	**Test Chamber 1**	**1**	**Test Chamber 2**	**1**

The overlap between the two projects is substantial: Both systems spin unidirectionally, measure fluid volume displacement across the mechanical seal face, regulate fluid reservoir pressures,

measure fluid pressure of reservoirs, measure temperature at various locations of interest, and ability to rotate the test chamber from vertical to horizontal positions. The only difference between the two projects would be specific parameters associated with rotational speed and the ability to rotate the test chamber. The physical significance of the differing parameters is that each family member is characterizing a different mechanical seal. Each family member will have a unique test chamber that requires different motor and controller combinations. The ability to rotate two unique test chambers and motor combinations will require unique mechanisms.

Even though the function requirements mention two family members, it can be economical to create a platform for products because of the overlap. Industry interest and standards can often change with a moment notice and the ability to create a product platform will allow economics for potential future derivative products.

3.3 DEVELOP AGGREGATE MODULAR ARCHITECTURE DIAGRAM (STEP 2)

The second step in the platform development process involves developing an aggregate modular structure or architecture. The result found in Figure 9 will provide a clear understanding of the shared functions and modules required to allow the product to execute its overall function [10]. From Section 2.5, mechanical seals have the expectation of long-term reliability with minimal leakage. This expectation is a balance between film thickness and allowable leakage. With minimal film thickness, an excess of heat will be generated resulting in premature failure. If the film thickness is large, the leakage across the seal face will be high.

Considering the expectation of mechanical seals, an aggregate modular architecture can be generated under the assumptions of the mechanical seals operating conditions. The module diagram should have the required functional modules for spinning the mechanical seal such as a motor and associated controller. Since mechanical seals operate in a pressure differential, functions that allow the ability to measure fluid pressure and collect the data with acquisition equipment will be required. As previously mentioned, the mechanical seals heat generation varies with film thickness so functions that provide the ability to measure temperature is necessary.

The modules found in Figure 9 are supply reservoir, pressure regulator, test chamber, collection reservoir, laptop, DAQ, sensors, motor, motor controller, and electrical source. The supply reservoir will hold the test fluid for distribution throughout the system. The pressure regulator in the aggregate architecture represents functional requirement row 4 in Table 1. The test chamber module represents the physical test chamber and the ability to rotate which corresponds to functional requirement row 7. Collection reservoir module simply collects the test fluid that has leaked through mechanical seals in the test chamber. The laptop module represents the user interface and allows operator to control the family members data acquisition,

motor speed, and controls. DAQ module is the data acquisition equipment required for all the sensors and motor controlling capabilities found in Table 1. The sensor module corresponds to the temperature and pressure sensors found in row 5 and 6. The motor and motor controller module corresponds to row 1 in Table 1.

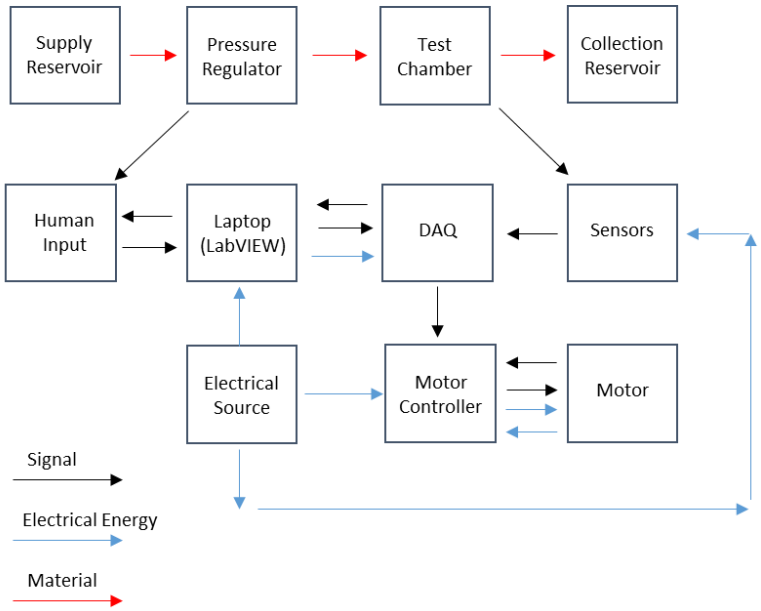

Figure 9: Aggregate Module Structure

The flow elements in the function diagram found in Figure 9 are electrical energy (blue), fluid material (red), and signal (black).

- The blue arrows represent the electrical energy required to operate the modules in the diagram. Electrical energy consumption is required for the laptop that run LabVIEW, the motor controller and motor, and the data acquisition equipment.
- The red arrows represent the fluid flow through the system. The fluid will start from a reservoir before leaking through the mechanical seals ending in a collection reservoir.
- The black arrows represent the digital and analog signals required to operate the modules blocks. Digital signals will exist between the laptop and acquisition equipment. Analog

signals will exist between temperature sensors and acquisition equipment. Visual and physical signals will occur between the operator and the laptop.

3.4 CONFIGURATION DESIGN OF FAMILY MEMBERS (STEP 3)

Step 3 in this platform and development process involves the union of both family members into a shared module structure. This structure provides all the modules for each family member in a single diagram. The identification of groups of components (modules) that can be shared between the systems at this stage of design can provide economics and prevent duplication of efforts that can be associated with designing products individually. The shared module architecture is shown in Figure 10 and is constructed through an iterative process that involves the aggregated diagram and functional requirements found in Steps 1 and 2.

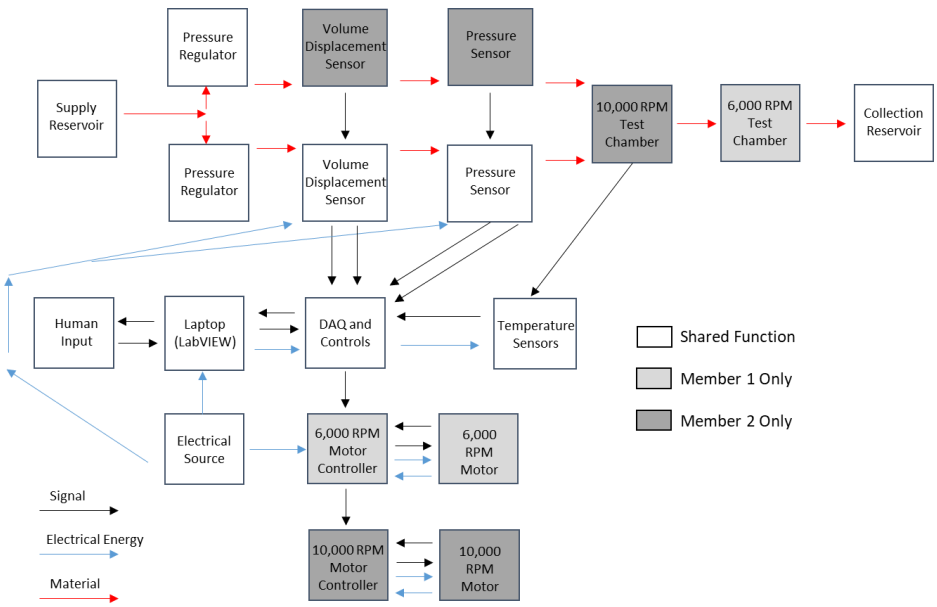

Figure 10: Shared Module Architecture

This iterative process involved expanding the aggregated diagram into more specific functions that can fulfil the functional requirements found in Table 1. The intersections between products are shown as unshaded function blocks and show potential for a common modular

platform. What complicates this platform is that the motor, controller, and test chamber do not share the same parameters. The motors are required to spin at significantly different speeds and the test chambers are going to be different geometries preventing a more comprehensive common platform. Even so, the shared modularity of the platform is substantial.

Figure 11 below was constructed from the modules from the shared module architecture in Figure 10. The mechanical schematic below supports the functional requirements by allowing rotation of the mechanical seal through the electric motor, it can measure volumetric displacement across one sealing face, it can measure pressure from the same reservoir that is measuring displacement, and temperature at various places of interest.

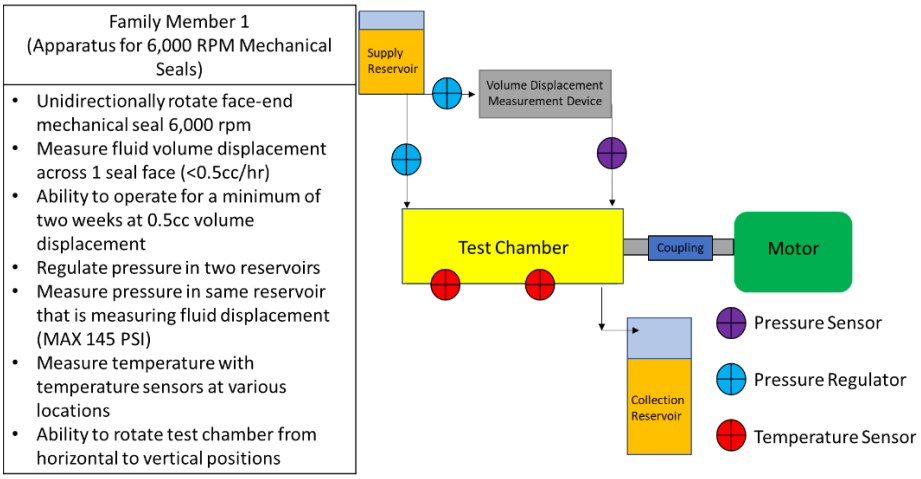

Figure 11: Family Member 1 Mechanical Schematic

Figure 12 was constructed from the modules in the function structure in Figure 10. The mechanical schematic in Figure 12 supports the functional requirements of family member 2 by allowing rotation of the mechanical seal through the electric motor, it can measure volumetric displacement across two sealing faces, it can measure pressure from both reservoirs, and it has the capability to measure temperature at various places of interest.

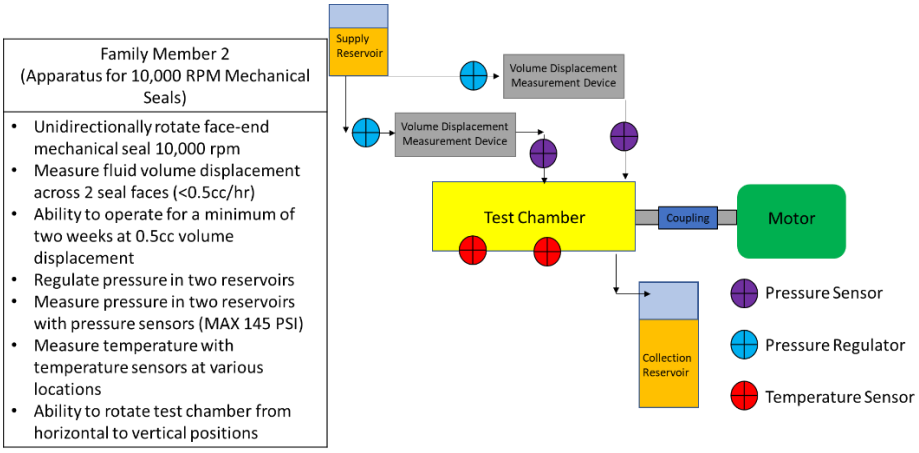

Figure 12: Family Member 2 Mechanical Schematic

The only functional requirement omitted in the mechanical schematic would be the ability to rotate the test chamber. This rotation of the test chamber will differ between the two family members because of the differing geometries and motor speed requirements. While considering these differences, the similarities between the two family members is apparent through the evaluation of mechanical schematic and family function structure.

CHAPTER 4

EVALUATE FAMILY MEMBER COMMONALITIES (STEP 4)

4.1 INTRODUCTION

In this research, not all the module commonalities from the previous chapter in Figure 10 are evaluated. The modules that are evaluated are thought to provide economics throughout the life of the product family. Modules that are ignored are supply reservoir, pressure regulator, collection reservoir, temperature sensors, human input, and electrical source. It is thought that a critical review or a physical design of these modules will not save time or provide economics for the product family. For example, critically reviewing a pressure regulator module in this platform would not be beneficial in this product family since several pressure regulating devices exist at reasonable cost.

Identifying modular commonalities between products in a product family is a primary objective for standardization. This standardization can happen at functional, configuration, sub-assembly, and component level. For this research, standardization of components and modules are explored from functional requirements to detailed design. Components and subassemblies are standardized with a focus on scalability when modular commonalities have the same parameters. If modular commonalities have differing parameters, the primary focus will be modularity within the product platform. Figure 13 shows the approach steps from Section 1.4 with the steps covered in this chapter highlighted in blue.

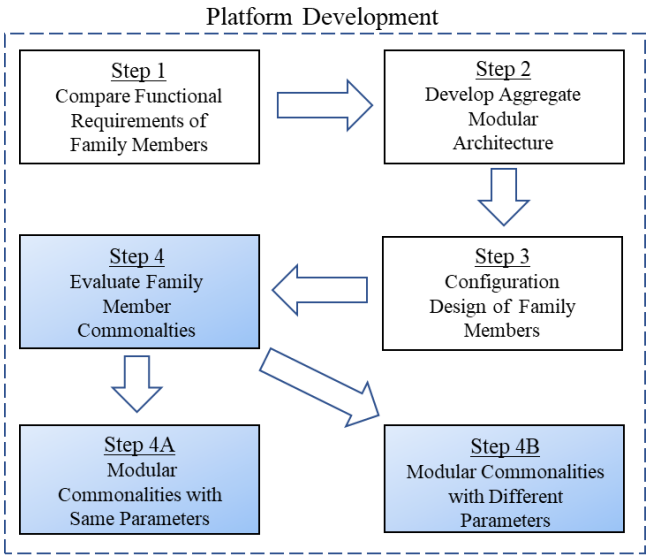

Figure 13: Approach steps in Chapter 4

4.2 MODULES WITH SAME PARAMETERS (STEP 4A)

The modules evaluated in this section are from Figure 10 and thought to provide economics and share the same parameters from Table 1. The modules in this section are considered to have the same parameters if the function requirements found in Table 1 share the same parameter across the product family (rows that are not bold). The modules evaluated in this section are DAQ and controls, volume displacement sensor, pressure sensor, and LabVIEW (user interface). The DAQ and controls modules is responsible for acquiring signals from sensors and controlling the motor which partially responsible for functions requirements related to sensors and controlling the motor in Table 1. The volume displacement sensor module is responsible for measuring low fluid displacement leakage and is responsible for functional requirement 2. The pressure sensor module is responsible for measure pressure in the fluid reservoirs and is responsible for functional requirement 5. The LabVIEW module is responsible for user interface for the system and is partially responsible for all the functional requirements in Table 1.

The focus during the design of the functional commonalities in this section will be on scalability. If the commonalties found in the shared module diagram are associated with have the same functional requirements in Table 1, for the purposes of this research, the components are considered common with same parameters, which leads to components component-level standardized between the family members. Consequently, the focus in this section will be on scalability for future projects related to mechanical seals.

4.2.1 DATA ACQUISITION AND CONTROLS

The data acquisition is a module commonality between the family members. The members in the product family require the ability for acquisition of analog sensor signals and motor control. Choosing a data acquisition platform that provides scalability for the addition of sensors in future family members can provide economics and convenience. Industry interests are in a constant state of change and new materials are in a constant state of development and providing the flexibility to scale the data acquisition is ideal.

DAQ Chassis: National Instrument manufactures a modular DAQ chassis that provides the ability to accommodate issues related to scalability using a modular approach. The DAQ chassis can accept different modules that accommodate different functions such as digital inputs or analog inputs. The chassis accompanied with the selected DAQ modules provide the ability to acquire data and provide electric signals for automation of the set-up. The modules inserted into the chassis accommodate specific tasks such as sensor inputs or motor controller communication outputs. For instance, a module that has analog input and output capabilities, thermocouple input, digital input and output, and strain gauge inputs were selected to meet the functional requirement

of family members. A chassis with four input modules can use any combination of modules which provides flexibility to scale and accommodate functional changes during the equipment characterization process. An example of a C DAQ chassis with modules can be found below in the Figure 14.

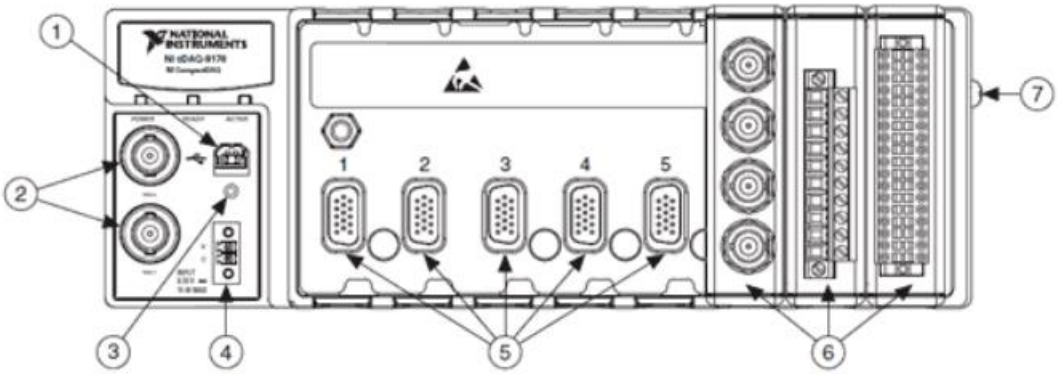

Figure 14: cDAQ Chassis: (1) USB Connector, (2) TRIG 0 and 1 BNC Connector, (3) USB Cable Strain Relief, (4) Power Connector, (5) Module Slots, (6) Installed Modules, (7) Chassis Grounding Screw - Source http://www.ni.com/pdf/manuals/372838e.pdf

DAQ Modules: Family members require the ability to acquire signals from temperature and pressure sensors, MTS linear displacement sensors, and the ability to communicate with a motor controller. There are several combinations of modules that can be purchased to achieve the parameters required for both set-ups. A thermocouple module can be used to acquire the temperature readings throughout the set-up, an analog in and out module could be used to measure the pressure and MTS sensor outputs, and a digital in and out module can be utilized to communicate with the motor drive. Figure 15 shows a possible module configuration for the chassis.

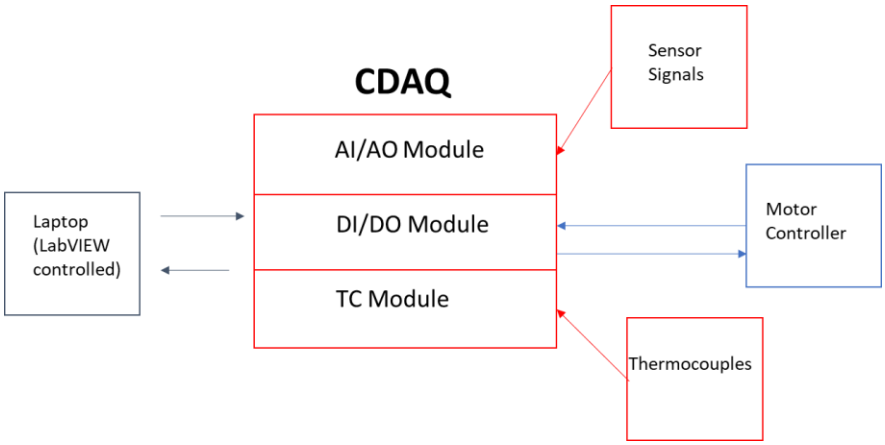

Figure 15: cDAQ Module Configuration

The DAQ will require the ability to acquire analog signals in a variety units and scales. For example, a pressure transmitter can be used with an output in 4-20 mA or 0-20 mA ranges as compared to a thermocouple with a different unit system in mV with varying ranges depending on thermocouple type. One reason for choosing sensor transmitters with mA output would be low susceptibility to electrical noise but comes at an added expense.

As mentioned, the analog signals from the thermocouple are in the mV range, the pressure transducers are in the mA range, the typical linear displacement sensor and the motor controller communication is in the V range. Digital signals will be required for both set-ups to enable communication between the cDAQ and the motor controller, so a DO/DI module for the DAQ will be required. For the analog signals that need acquired from pressure and MTS sensors, an AI module was acquired for this application that can measure various voltage ranges of ±10V, ±5V, ±1V, ±0.2V. Since the pressure transmitter has an output range of 4-20mA, a signal converter and conditioner can be used to convert the current signal into a voltage for measurement with the DAQ. Even though the thermocouple signal has an mV range that can be measured with certain AI modules, a separate thermocouple module is used in this application. This gives the ability to change thermocouple types without manually scaling the values in the software.

4.2.2 VOLUME DISPLACEMENT ASSEMBLY

The fluid volume displacement sensors are common between the two members in the product platform. The volume displacement sensors share the same parameter of measuring a rate of fluid displacement of less than 0.5 cubic centimeters per hour. Since face-ended mechanical seal leak rates are low, conventional volumetric flow rate sensors such as paddlewheel or induction flowmeters will not provide enough accuracy at low flowrates required for the characterization of these seals.

Fluid volume displacement will need to be measured in both directions. For instance, if the fluid reservoir and mechanical seal are at room temperature during static operation, when the mechanical seal starts rotation heat will be generated at the seal face. The generated heat at the seal face will transfer to the fluid causing an expansion of the fluid. The expanding fluid will increase system pressure which will create difficulties consistently maintaining a pressure differential across the seal face. To properly characterize the seal requires the ability to measure the fluid expansion without significant system pressure increase.

Accumulators are used in hydraulic systems as an auxiliary or emergency power source, leakage compensator, and hydraulic shock absorptions [11]. There are several types of accumulators, but a piston accumulator provides an opportunity to track the position of piston and therefore fluid displacement. Figure 16 is a schematic representation of a piston accumulator. Two different fluid media are separated by a piston. The right side of the piston is an incompressible fluid and the left side is a compressible gas. The gas on the right side of the piston is compressible so it behaves like a spring absorbing transient shock from the oil (left) side of the piston.

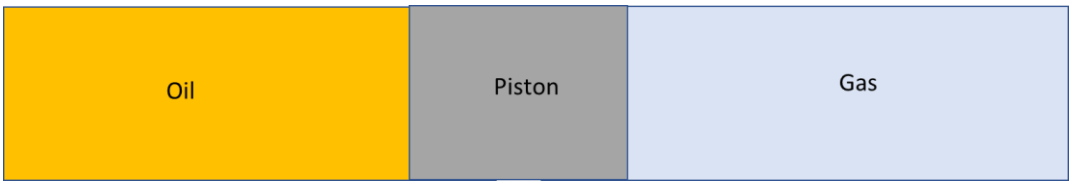

Figure 16: Piston Accumulator Mechanical Schematic

Assuming negligible piston and seal friction, notice that if the piston is static then the pressure on either side of the piston should be equal. This allows the hydraulic side pressure to be regulated by the pressure of the gas side of the piston. System pressure can then be regulated through a gas regulator like what is found on metal welding or torching equipment.

When the fluid side of the accumulator expands or loses fluid, the piston will move to equalize the pressure. It is this movement of the piston that can be directly translated to an evacuation or expansion of fluid. Traditionally piston accumulators are manufactured with low or no resolution in the ability to track piston position. This lack of resolution required the design of a piston accumulator device with high piston displacement resolution. The economics required to design this accumulator device can be spread across the product platform for characterizing mechanical seals.

MTS non-contact time based magnetostriction linear displacement sensors was used for tracking the piston in the accumulator. This sensor was particularly desirable due to the no contact sensing and high linearity. The ability to measure displacement without direct contact allows movement of the piston without additional friction forces. The high linear range of these sensors demonstrates Class A performance per ASTM E2309. A typical linear displacement sensor with a physical range of more than 25cm can struggle to achieve Class C performance [12].

The functional requirements state that the volume displacement measuring device needs to measure displacement smaller than 0.5 cubic centimeters per hour. The design considerations for

the fluid displacement assembly is the analog input resolution, the analog output range of the linear displacement sensor, and volume of displaced fluid per linear distanced travel of piston. Figure 17 below is an image of a typical MTS sensor with associated analog output options available. The magnet in Figure 17 rides along the axial direction of the shaft throughout the active stroke length without physical contact between the shaft and magnet. As this magnet moves along the shaft of the sensor, the sensor will provide an analog output signal for measurement that is proportional to an absolute position along the shaft.

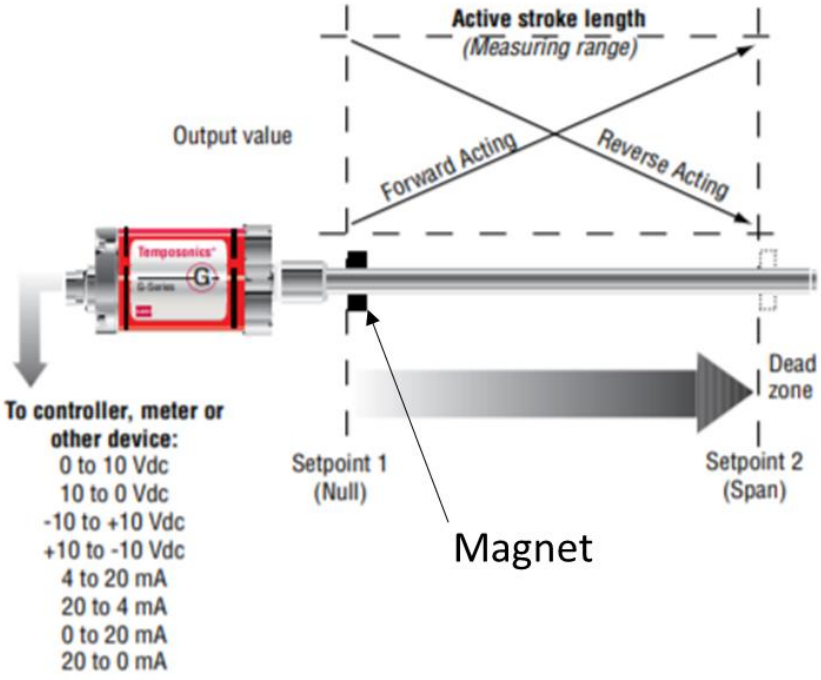

Figure 17: Analog output options for MTS sensor - Source: http://www.mtssensors.com/fileadmin/media/pdfs/Products/Industrial/G_Series_GP_GH_Analog_DPulse.pdf

Standard analog input resolutions for data acquisition equipment include 12, 16, and 24-bit. The analog input resolution is defined at the minimum analog signal that the acquisition equipment can resolve [13]. This is because all analog signals must be digitized to be displayed on

a computer screen or data logged for future reference. The digitization of the analog signal is done with an analog to digital converter (ADC) which converts the analog signal to a binary number (base 2) which is later converted to a physical number (base 10) that is more familiar.

To verify the ADC resolution that would be required for this application of measuring displacement, a sensor analog output of -10VDC to +10VDC is chosen with a total span of 20VDC. To find the resolutions of an n-bit ADC, the span of the signal will be divided by 2^n [13]. For instance, a 12-bit resolution ADC can resolve 4,096 unique values, 16-bit represents 65,536 values, and 24-bit represents 16,777,216 values. Dividing the total span of the sensor by the unique values will provide the minimum measurable value of the ADC. For instance, a 12-bit ADC will have a minimum measure value of 4.88mV, 16-bit ADC can measure 0.305mV, and 24-bit ADC can measure 0.0012mV. In summary, if a 12-bit ADC can resolve the measurement in this application then any greater resolution ADC will work.

First an inside diameter of the piston accumulator was chosen to be 1.702-inch or 4.318 cm for tooling and manufacturing purposes. The linear distance required for a piston with 1.702-inch diameter to displace 0.5cc of fluid is calculated.

$$D_p = 1.702in. = 4.318\ cm$$
$$A_{CS} = \pi r^2 = \pi(\frac{4.318cm}{2})^2 = 14.64cm^2$$
$$V_d = A_{CS} \cdot l \ \ \therefore l = \frac{V_d}{A_{CS}} = \frac{0.5cm^3}{14.64cm^2} = 0.034\ cm = 0.013in$$

where D_p is the piston diameter, A_{CS} is the cross-sectional area of the piston, V_d is the volume of displaced fluid, and l is the length required to displace 0.5cc of fluid. In plan terms, the equation above states that the magnet will move 0.013 inches when it displaces 0.5mL of fluid with a piston diameter of 1.702 inches. This length will be required to find the active stroke length of the MTS sensor and if 12-bit ADC can resolve the linear distance.

To calculate the active stroke length of the MTS sensor, the total travel of the piston in the accumulator is required. The total volume the piston accumulator holds is necessary to find this total travel of piston. From the operational requirements, the system will need to operate continuously for minimum of two weeks at 0.5cc per hour fluid displacement. There are 336 hours in a 2-week span, multiplying 336 hours by 0.5cc per hour results in a minimum volume of 168cc for the displacement sensor. Providing roughly 30 percent increase in the theoretical minimum volume would result in a volume for the displacement sensor of roughly 220mL. This 30 percent increase in volume will provide the buffer required for fluid expansion.

The volume displacement sensor is divided into 5 components – piston housing, hydraulic side endcap, sensor side endcap, piston, and MTS sensor. Figure 18 is an image of the assembly demonstrating the location of each of the components is found below.

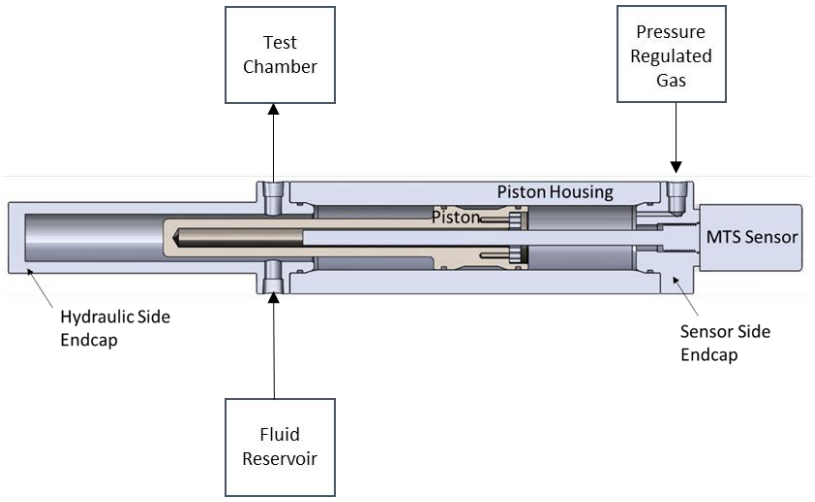

Figure 18: Assembly image of displacement sensor

Comparing the schematic above with the one found in Figure 16 provides an understanding of how the volume displacement sensor functions. The gas on the right side of the assembly is separated from the fluid on the left by the piston. There is a magnet attached to the piston that rides axially along the shaft of the MTS sensor. As the fluid displaces through the

assembly the piston will move the magnet along the shaft of the MTS sensor creating a voltage change in the sensor output that can be detected through data acquisition equipment.

The overall length of the displacement sensor assembly is determined by the required stroke length of the sensor to displace 220mL of fluid. This stroke length is calculated by dividing total volume of displacement sensor by the cross-sectional area.

$$V_{total} = \pi r^2 \cdot l_{total}$$

$$l_{total} = \frac{V_{total}}{\pi r^2} = \frac{220mL}{\pi(4.323/2)^2 cm^2} \cong 15cm \cong 6in$$

$$V_{total} = \pi(\frac{4.326cm}{2})^2 \cdot 15cm \cong 220mL$$

V_{total} is the total displacement equal to 220mL and l_{total} is the stroke length of the sensor required to displace 220mL. The calculations in Figure 12 show that a stroke length of 6 inches would be required for the sensor assembly to displace 220mL of fluid. Figure 19 below give a visual representation of this stroke length in the models.

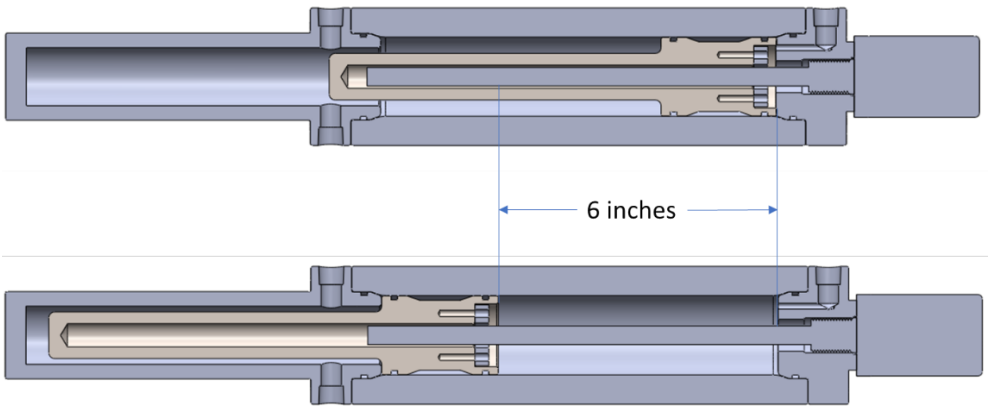

Figure 19: Image showing stroke length

As mentioned earlier in the section, functional requirement of this assembly is the ability to measure leakage of less than 0.5cc. Another way to phrase this requirement would be an ability

to measure several discrete values when the accumulator leaks 0.5cc. This can be accomplished by finding the voltage per inch of the displacement assembly and then multiplying that value by linear piston movement required to leak 0.5cc.

$$V_s = 20V;\ \ l = 0.013in$$

$$\frac{20V}{6in} \cdot 0.013in = 43.33mV$$

V_s is the voltage span for the MTS sensor and l is the length required to displace 0.5mL fluid. Dividing the voltage span by active stroke length of the sensor provides the signal output per inch (V/in) of the sensor. Multiplying the signal output per inch of the sensor by the length required to displace 0.5cc provides the voltage change in the output of the sensor, 44.33 mV.

A 12-bit ADC can resolve measurements into minimum increments of 4.88mV. Dividing the change in output of the sensor by this minimum incremental value will show the resolution possible with the 12-bit ADC.

$$R = \frac{43.33mV}{4.88mV} = 8.9$$

R is the resolution of the ADC when the MTS sensor leaks 0.5cc of fluid. In other words, there are 8.9 discrete values possible when the fluid displacement sensor displaces 0.5cc of fluid. In theory, this resolution is enough to satisfy the functional requirements since it will provide significant resolution.

4.2.3 PRESSURE SENSOR (PX429-250GI)

Another functional commonality shared between the two family members would be the pressure measurement sensors. The functional requirements state a maximum pressure of 145 PSI for both product variants. A pressure gauge would be a common solution for this application because it is a cheap form of pressure sensor. The issue with using an analog pressure gauge would

be the experimental duration that would cause the operator to manually record the data to characterize the mechanical seals. The use of a transducer or transmitter with an analog output signal that can be digitized with data acquisition equipment will provide data logging capabilities over extended periods of time.

Strain gauge pressure transducers have output signals in either mV or V, whereas transmitters have output signals in mA. One of the benefits of using a transmitter is that the mA signal is not as susceptible to electrical noise from the environment or resistances in the wiring. This allows for long distances between the transmitter and receiver and use in noisy environments.

Omega Engineering manufactures a pressure transmitter that accepts supply voltage range of 9-30 VDC and an accuracy of ±0.08% BSL (Best Straight Line). The accuracy of the transmitter is the combined linearity of hysteresis and repeatability within ±0.08% of full-scale output. From the objectives, the maximum system pressure is close to 150-psi and OMEGA manufactures 150 psi and 250 psi transmitters. The calculated BSL error for 150-psi transmitter would be ±0.12 psi, whereas the 250-psi transmitter is ± 0.2 psi. In other words, the 150-psi transmitter will not transmit a signal that differs from actual pressure by more than ±0.12psi and 250-psi transmitter will not differ by more than ±0.2 psi. The 250-psi transmitter was used for both set-ups since the error ranges for both transmitters are permissible, and the larger range could potentially accommodate future objective changes.

4.2.4 USER INTERFACE (LabVIEW)

The user interface between the two family members similar. The user interface will require the ability to display temperature, pressure, and volume displacement readings from the sensor and toggle the ability to record the sensor data. The LabVIEW program has safety features programmed into it such that if temperature values reach a certain threshold the servo motor stop

rotation. The user interface for the family member 1 is shown in Figure 20. The user interface for family member 2 is not shown because it is almost identical. The only difference is family member 1 only measures leakage with one volume displacement sensor, so there is only one horizontal bar graph related to fluid volumes.

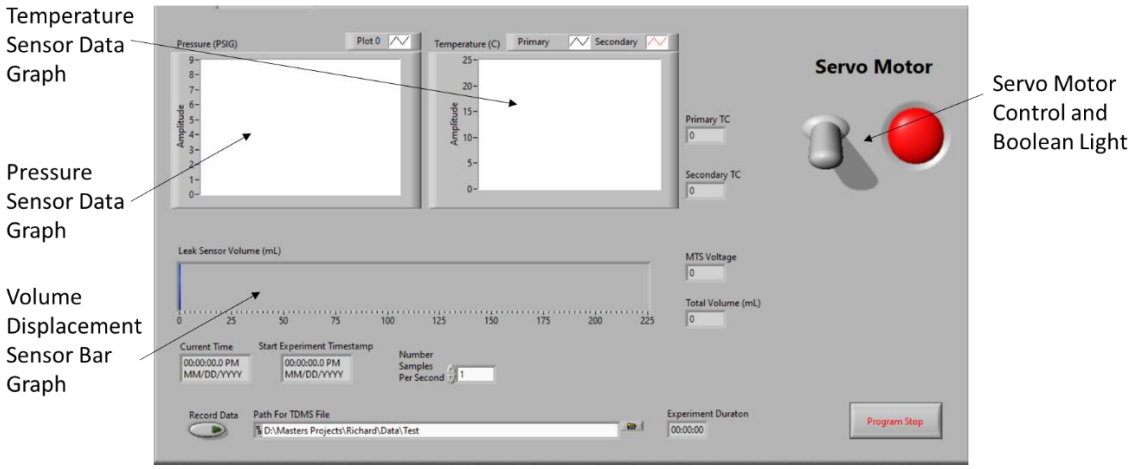

Figure 20: User Interface (Family Member 2)

4.3 MODULES WITH DIFFERENT PARAMETERS (STEP 4B)

The focus on design and component selection has been modularity within the product family. If the commonalties found in the shared function diagram have differing functional requirements in Table 1 (bold rows), for the purposes of this research, the components are considered common with different parameters. This means components in this section are going to be modularly standardized in the product platform. From product architecture perspective, the functional components in this section should be interchangeable within family members.

4.3.1 MOTOR AND CONTROLLER

Even though each of the family members have a motor and controller functional commonalty of unidirectional rotation, the parameters of the motor controller will need to be different. Family member 1 needs to spin a mechanical seal at 6,000 rpm, whereas family member

2 spins the mechanical seal 10,000 rpm. Family member 1 and 2 have the functional requirement of the test chamber having the ability to rotate from a horizontal to vertical position. The reasoning behind the ability to rotate the test chamber will be discussed in Section 4.3.2.

An electric motor that operates exclusively in the vertical positions can require a different combination of bearings than a motor operating in the horizontal position. This is due to the weight of the rotor that is attached to the shaft creating a reaction force that needs supported differently depending on the orientation of the motor. The rotors in larger electric motors can be heavy.

FAMILY MEMBER 1 MOTOR AND CONTROLLER

One requirement for family member 1 is the ability to rotate for long periods of time at 6,000 RPM in the vertical position. The AKM43L-ACCNC synchronous motor was chosen for this application due to familiarity of Kollmorgen products and the ability to reach rotational speed requirements. The AKM4 series is a family of synchronous servo motors with SFD (Smart Feedback Device) option. The servo drive chosen for this motor is AKD-T01206-ICAN-0000. Figure 21 shows the servo and drive combination chosen.

Servo Motor	Motor Drive
	
AKM43L-ACCNC-00	AKD-T01206-ICAN-0000

Figure 21: Family Member 1 Servo and Drive Combination [14]

Considering the facilities voltage capability of 240 Vac, the servo and drive combination chosen is capable of rated speed of 6000 rpm, continuous torque of 41.9 lb-in, and peak torque of 104 lb-in [14].

FAMILY MEMBER 2 MOTOR AND CONTROLLER

One requirement for family member 2 is the ability to rotate in the vertical position for extended periods of time at 10,000 rpm. The challenge with this requirement was locating a motor manufacturing company that is capable of spinning at these high speed in the vertical position. Siemens induction servo motor and drive combination are chosen for this family member. It has the capability to operate in the vertical position at a maximum operating speed of 12,000 rpm. Figure 22 shows the servo and drive components required for family member 1.

Servo Motor	Power Module	Control Unit	Line Filter/Reactor	Braking Resistor
				
1PH81051DS000LA1	6SL32101PE227UL0	6SL30401MA000AA0	6SL32030CE238AAO	6SL32010BE238AA0

Figure 22: Family Member 2 Servo and Drive Combination [15-19]

This family of Siemens S120 product focuses on modular design. The closed loop functionally and controls is handled in the control unit. The control unit acts as the central intelligence component of the S120 drive system. The power module is like a traditional variable frequency drive for induction motors but provide closed loop feedback to the control unit. Line filters are used smooth out rates of change in voltage and prevent load spikes from the input of the power module. This

filtering of the voltage protects and improves performance of the induction motor. When the motor is decelerating, it creates an access of DC voltage that is stored in the DC link. When the DC link voltage becomes too high, the power module will dump the access energy into the braking resistor.

4.3.2 TEST CHAMBER ROTATION

Even though each family member requires the ability to change the orientation of the test chamber from vertical and horizontal positions, what makes this module's parameters different is the fact that the test chamber and motor combinations are different. The reason behind the different test chamber geometries is each system is characterizing a differ mechanical seal stack. An illustration that gives a general sense of scale and compares the different seal stacks for family member 1 and 2 is shown below in Figure 23.

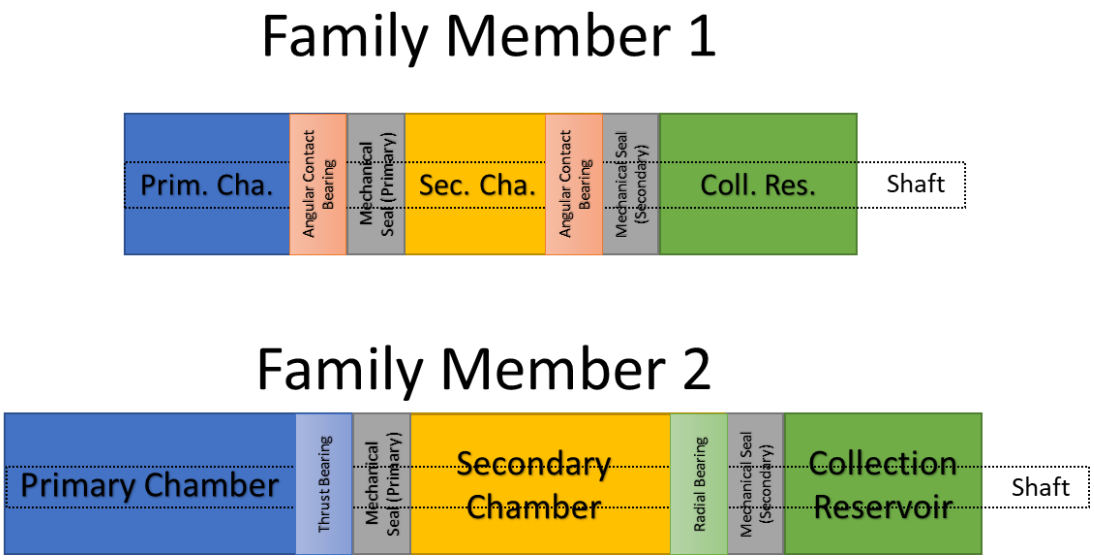

Figure 23: Family Member Test Chamber Comparison

Even though each of the family members have a motor and controller functional commonalty of unidirectional rotation, the parameters of the motor controller will need to be different. Family member 1 needs to spin a mechanical seal at 6,000 rpm, whereas family member

2 spins the mechanical seal 10,000 rpm. Family member 1 and 2 have the functional requirement of the test chamber having the ability to rotate from a horizontal to vertical position. The reasoning behind the ability to rotate the test chamber will be discussed

In Figure 10, the test chamber modules for both family members require the ability to rotate the test chamber periodically between the vertical and horizontal position. The mechanical seals that are being characterized are ran in the field in the vertical position, but the ability to operate horizontally is beneficial for other mechanical seals types. Matching the field orientation of the mechanical seal during the experiments will result in better characterization of the seal which would ultimately result in better data for possible data driven decisions. For both family members, the horizontal positioning of the test chamber serves multiple purposes by allowing the operator to vacuum fill the interior components of the test chamber with the test fluid and allows the operator to easily remove test chamber for disassembly and troubleshooting.

The inside components of the test chamber have intricacies that trap gases when pressure filled. Since the sealing interface of a mechanical seal is rotating at high speeds, heat is generated and transferred to the test fluid resulting in high temperatures around the seal. Mineral and synthetic based fluids oxide rapidly at higher temperature so removing as much air as possible before running the experiment will slow the degradation process of the test fluid. The Figure 24 below shows an example of a test chamber that houses a mechanical seal stack and possible vacuum ports that would allow for a vacuum fill of the test chambers.

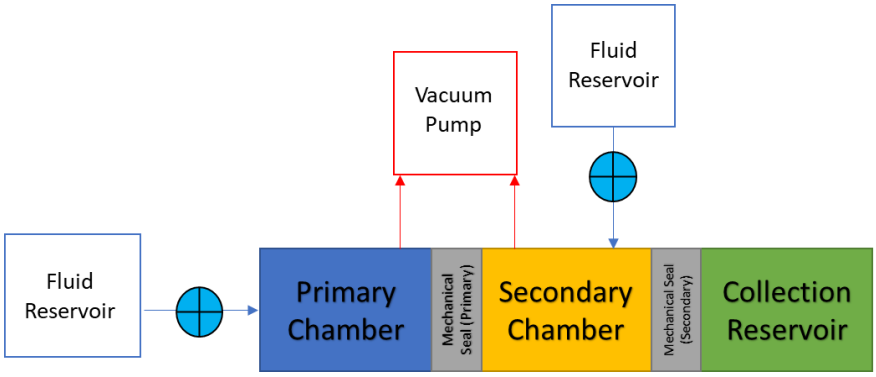

Figure 24: Vacuum Fill Schematic

The inside of the test chamber has complicated geometries with cavities that would be difficult to evacuate all gas without pulling a vacuum. If the fluid reservoir in Figure 24 is slightly pressurized and the fluid could flow into the chambers, the geometries of the mechanical seals and bearings would allow for gas pockets to form. These air pockets would introduce oxygen and moisture into the test fluid. At elevated temperatures, the moisture and oxygen will degrade the test fluids over time by allowing sludges to form.

The procedure of vacuum filling the chambers consists of closing the valves that connect the fluid reservoir to the test chambers and pulling a deep vacuum in the chambers before opening the valves. This process will remove most of the air out of the chambers and allow the test fluid to get pulled into the chamber. This creates a low moisture and oxygen environment that will increase the service life of the fluid and help prevent sludges from forming.

The ability to rotate the test chamber from the horizontal tabletop position to the vertical creates a unique set of challenges. The location of the pivot point that the motor and test chamber rotate about will determine if an operator can rotate the assembly without the need for mechanical advantage such as a pulley system.

CHAPTER 5

PHYSICAL SETUPS (STEP 5)

5.1 INTRODUCTION

From a product platform perspective, this family of products have high commonality. This high product platform commonality does not translate into physical commonality for this family of products. The reason for dissimilarity between physical and platform level commonalities is discussed in Section 4.3. The functional commonalties in this section require the implementation of physically different components into the family members.

This chapter represents Step 5 from Section 1.4 in the approach overview. This chapter will discuss and compare the differences in the main mechanical and electrical subsystems due to the modules in Section 4.3. Parameters in the commonalties relating to rotational speed and test chamber geometry required unique mechanical and electrical design projects.

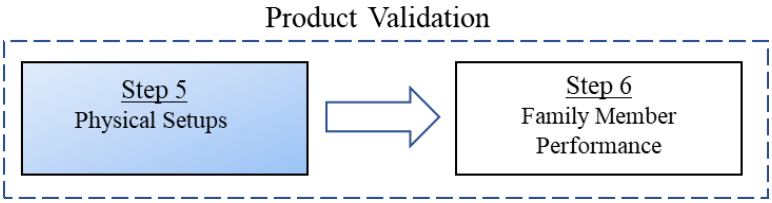

Figure 25: Approach Step in Chapter 5

5.2 MECHANICAL SYSTEMS

The mechanical system of each family member can be broken down into three main subsystems: tabletop assembly, rotating mechanism, and framing. The mechanical subsystems for each of the family members is fabricated mostly out of aluminum for ease of manufacturing and assembly. Family member 1 mechanical components was designed and manufacturing at the University of Oklahoma, and family member 2 mechanical components was designed and manufactured off campus by a corporate sponsor. The platform commonalities with differing parameters found in Section 4.3 is the reason why the mechanical subsystems in Figure 26 are not physically similar. The difference in the size of electric motors and test chambers prevented similar design of mechanical systems.



Figure 26: Mechanical Subsystems (Right Image: Family Member 1, Left Image: Family Member 2)

TABLETOP ASSEMBLY FAMILY MEMBER 1

The tabletop assembly for family member 1 shown in the Figure 27 below was the model developed for providing alignment and rigidity between the test chamber and motor. A major consideration during the development of this sub system was the ability to disassemble the test chamber without removing the test chamber housing. This effectively allows the tabletop assembly to be the workbench for the test chamber. This will provide the ability to remove the mechanical seals that are being characterized from the subsystem without losing positioning or alignment between the motor and test chamber. This coupling that joins the servo motor to the shaft of the test chamber is not shown in the Figure 27 below.

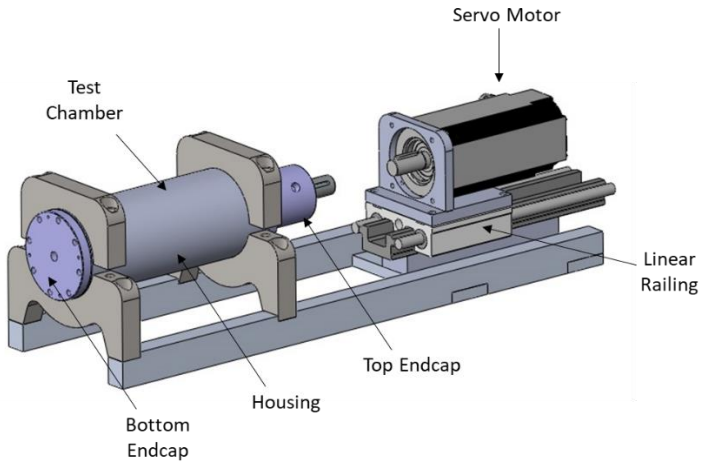

Figure 27: Tabletop Assembly (Family Member 1)

Notice that the servo motor is attached to the sliding carriage of a linear railing assembly. The linear railing was manufactured by Thompson Linear and provides the ability to move the servo motor away from the test chamber for disassembly. The ability to move the motor away from the test chamber provides that opportunity to remove the top endcap from the housing during the disassembly process. This will save the operator a substantial amount of time since the test chamber will only need to be aligned with the motor once, rather than every time the test chamber

is disassembled. The shafts of the electric motor and test chamber will need to be aligned within the specs of the misalignment coupling discussed in another section.

TABLETOP ASSEMBLY FAMILY MEMBER 2

The tabletop assembly for family member 2 shown in Figure 28 below was designed and manufactured to provide alignment and rigidity between motor and test chamber. Notice the geometries of this test chamber is substantially different than family member 1. The reason for the difference in geometries in the test chamber is because the systems are characterizing completely different seal stacks. The several components involved in the test chamber for family member 2 are numbered in Figure 28 will not allow for disassembly without removal from the tabletop assembly.

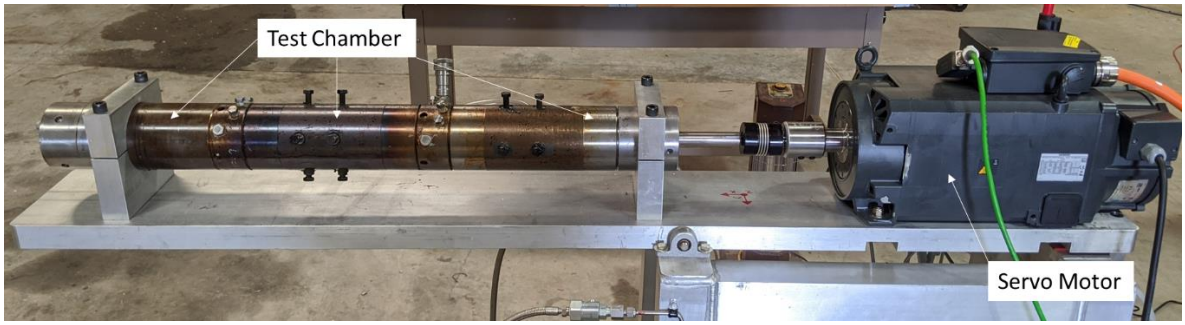

Figure 28: Tabletop Assembly (Family Member 2)

ROTATING MECHANISM FOR FAMILY MEMBER 1

The rotating mechanism that was developed for family member 1 is shown in Figure 29 below. The design of this rotating mechanism provides the ability to clamp the tabletop assembly in a range of positions from horizontal to vertical and all the positions between.

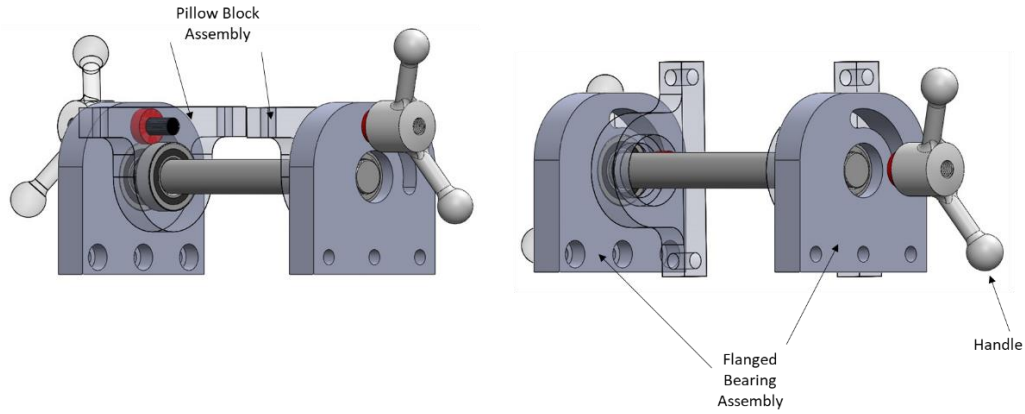

Figure 29: Rotating mechanism - Left horizontal position, Right vertical position (Family Member 1)

The flanged bearing and pillow block assembly both have simple ball bearing pressed into them to allow the rotation around the pivot point of the shaft. The rotating mechanism was scaled such that the pillow blocks will bolt directly to the railing of the tabletop assembly. The centerline of the handle is threaded such that when the operator tightens the handle, the rotating mechanism is clamped in place. This gives the ability to not only clamp the tabletop in the vertical and horizontal positions, but any position in-between.

ROTATING MECHANISM FAMILY MEMBER 2

The components involved in the rotating mechanism for family member 2 is shown below in Figure 30. A boat wench was implemented into the design as a pulley system due to the combined weight of the motor and test chamber that requires a mechanical advantage for horizontal and vertical orientation maneuvers. The pivot point in the image is similar to the pillow block found in Figure 29. Once the tabletop is in the vertical or horizontal position, the table will be secured into place with the bolts shown in Figure 30.

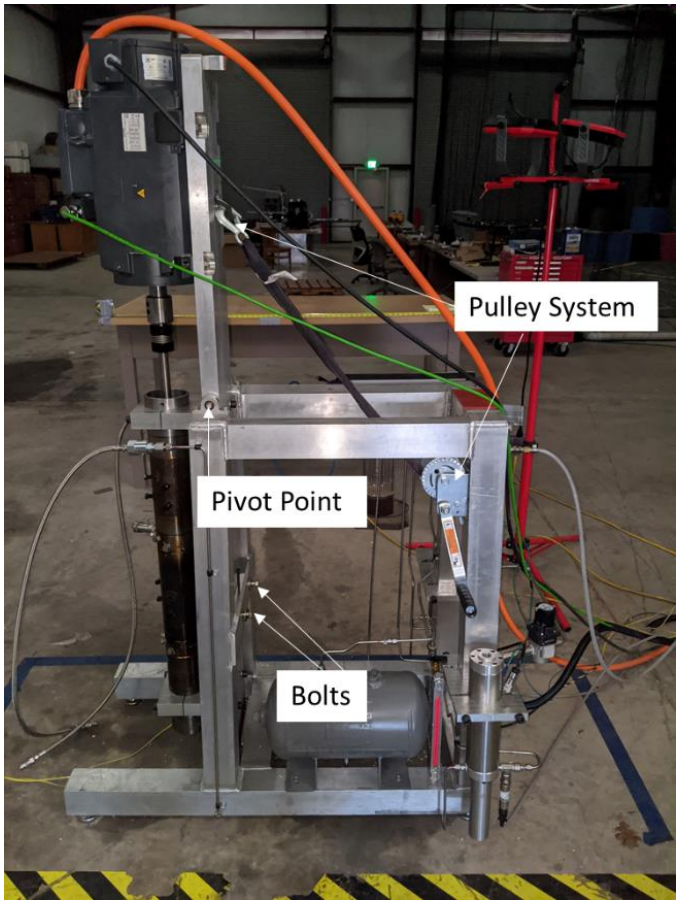

Figure 30: Rotating Mechanism (Family Member 2)

FRAMING AND FINAL FABRICATED ASSEMBLY FAMILY MEMBER 1

The framing for family member 1 was designed to support the rotating mechanism, tabletop assembly, and other supporting hardware. The framing is fabricated from 6061-T6 aluminum. It was scaled to accommodate the hardware that is shown in Figure 31.

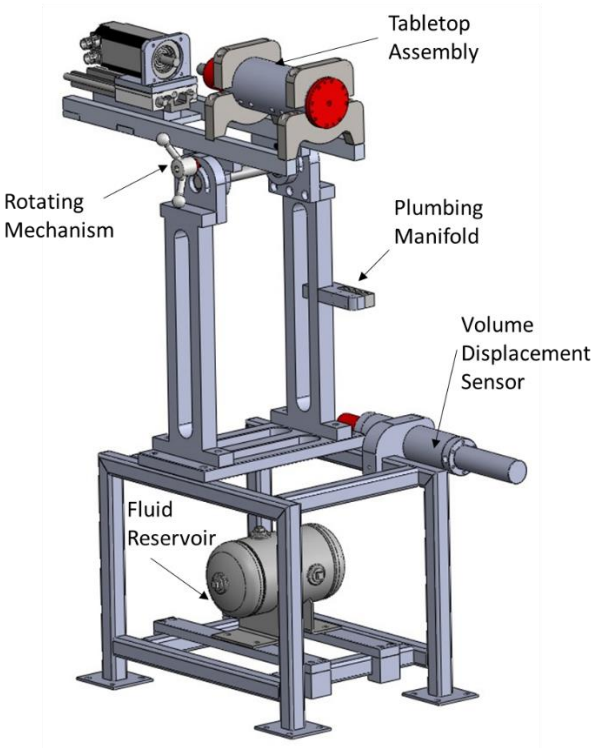

Figure 31: Framing (Family Member 1)

Most of the components found in the models from the previous section were fabricated in the University of Oklahoma's Aerospace and Mechanical Engineering department machine shop. Even though manufacturing the setup out of steel would be more economical than aluminum, the setup was fabricated out of aluminum for ease of machining, fabrication, and reduced weight when compared to steel. After the fabrication and assembly process, rigid and flexible tubing was installed as shown in the schematics in Section 3.4. Figure 32 shows the physical setup assembled with plumbing installed.

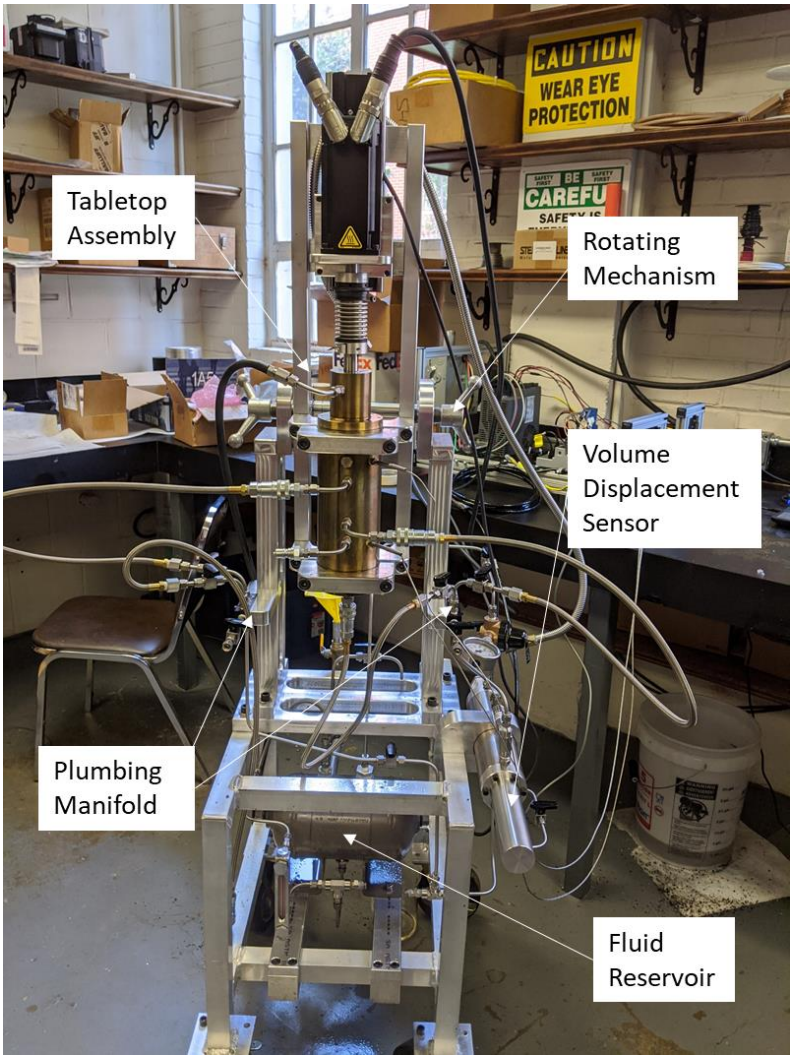

Figure 32: Family Member 1 Fabricated Assembly

A combination of flexible and rigid plumbing is used for this family member. The flexible plumbing would be used from the test chamber to the plumbing manifold found in Figure 32. This would provide the ability to vacuum fill the chambers in the horizontal position and then rotate the assembly into the vertical without disconnecting plumbing that could allow air back into the test chamber. A mount was designed to rigidly attach the volume displacement sensor to the frame. Figure 31 and Figure 32 shows the volume displacement sensor attached to the frame. One side of

the volume displacement sensor will be attached to a compressed air or gas source while the other side will be connected to the pressure manifold filled with test fluid as discussed in Section 4.2.2.

FRAMING AND FINAL FABRICATED ASSEMBLY FAMILY MEMBER 2

The framing, rotating mechanism, and tabletop assembly found in this section was not designed or manufactured at the University of Oklahoma. The framing for family member 2 is designed to support the rotating mechanisms, tabletop assembly, and other supporting hardware found in Figure 33. The framing, tabletop assembly are constructed from 6061-T6 aluminum. It was scaled to accommodate the hardware shown in Figure 33.

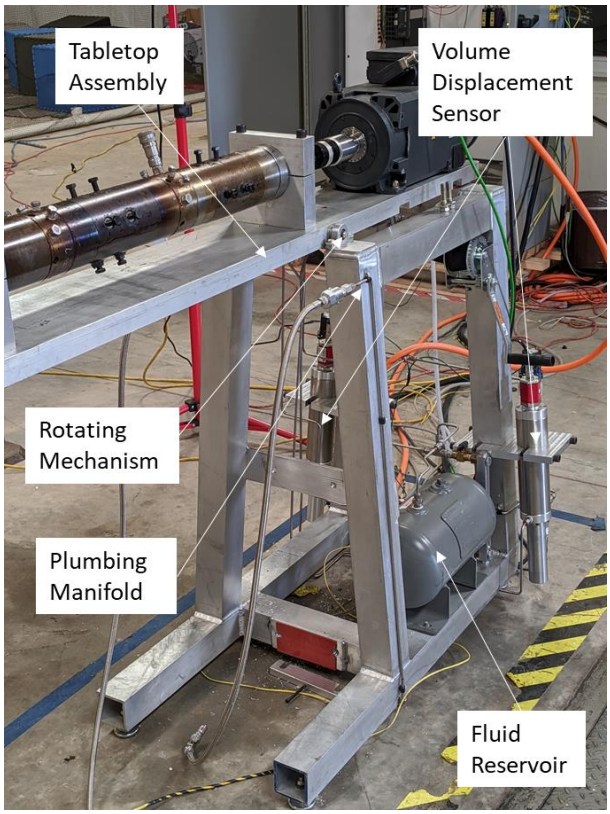

Figure 33: Family Member 2 Fabricated Assembly

The hardware shown in Figure 33 was mounted and troubleshooted at the University of Oklahoma. The framing and tabletop assembly was manufactured out of 6061-T6 aluminum for ease of manufacturing, fabrication, and reduced weight when compared to steel. After the fabrication and assembly process, a combination of rigid and flexible tubing was installed as shown in the schematics in Section 3.4. The flexible plumbing would be installed from the plumbing manifold to the test chamber shown in Figure 33. The flexible tubing provides the ability to vacuum fill the test chamber in the horizontal position and then rotate the tabletop assembly into the vertical position without disconnecting plumbing that could allow air back into the test chamber. Custom mounting hardware for the volume displacement sensor was manufactured at Aerospace and Mechanical Engineering's department machine shop. Figure 33 shows the volume displacement sensor attached to the frame of family member 2. The gas side of the sensor will be attached to a compressed air or gas source while the other side will be connected to the pressure manifold filled with test fluid as discussed in Section 4.2.2.

5.3 ELECTRICAL SYSTEMS

The electronics for both family members was designed at University of Oklahoma. The electronics can be broken down in to two main subsystems: motors control components and data acquisition. The other components are supplemental such as signal conditioners, solid-state relays, and AC-to-DC power supplies. The signal conditioners convert mA signals to voltage and filter the analog signal before acquisition, the solid state relays are used in family member 1's electronics for DAQ to motor drive communication, and the AC to DC power supply was used for the 24VDC bus. Figure 34 shows an image of family member 1 electronics.

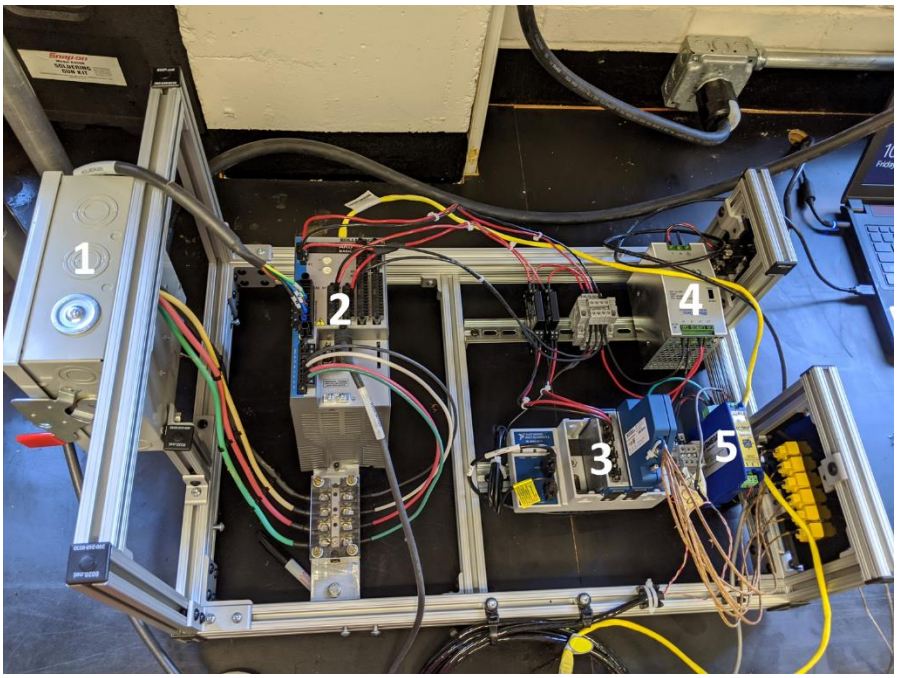

Figure 34: Family Member 1 Electronics: (1) 3PH Shutoff, (2) Motor Controller, (3) Data Acquisition, (4) AC to DC PS, (5) Signal Conditioner

The reason for the significant difference in the electronics between the family members is related to the motor controller. Family member 1's motor requires only one component, whereas family

member 2's motors requires 4 unique components for control. Figure 35 is an image of the electronics cabinet for family member 2.

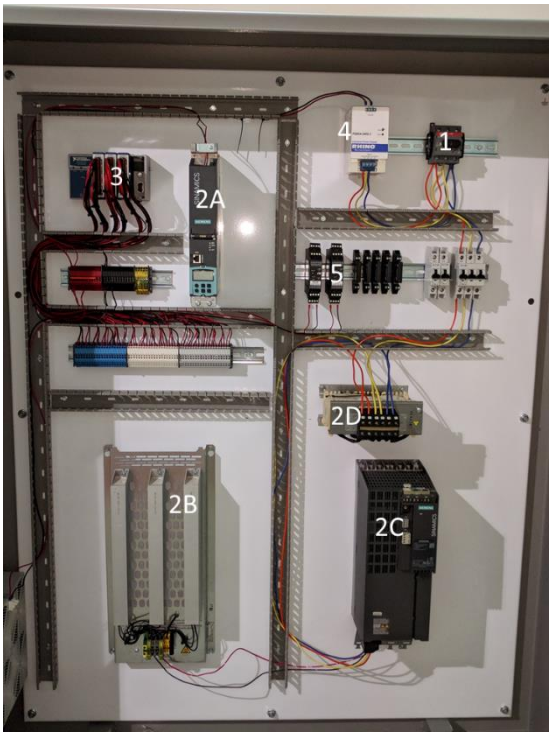

Figure 35: Family Member 2 Electronics: (1) 3PH Shutoff, (2A-2D) Motor Controller Components, (3) Data Acquisition, (4) AC to DC PS, (5) Signal Conditioner

As mentioned earlier, family member 2 requires 4 motors controller components as compared to 1 controller component for family member 1. There are two reasons for the differing controller components: (1) Family member 1 is a synchronous motor and Family member 2 is an asynchronous/induction motor, (2) Family member 2 motor spins at higher rotational speeds requiring a braking resistor.

CHAPTER 6

PRODUCT FAMILY PERFORMANCE (STEP 6)

6.1 INTRODUCTION

This chapter is the last step in the product validation procedure presented in this thesis. The performance of the family members is measured by the comparison of a combination of test data and physical observations to the function requirements found in Table 1. Highlighted in blue in Figure 36 is the step from Section 1.4 that will be discussed in Chapter 6.

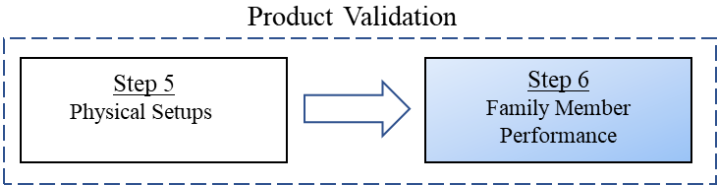

Figure 36: Approach Step in Chapter 6

6.2 COMPARE PHYSICAL SETUP WITH FUNCTIONAL REQUIREMENTS

For the purposes of this paper, the performance of the product family is conducted through a combination of test data and physical observations. The observations are then compared to the functional requirements found in Table 1. For each family member, there are seven functional requirements. Each of these seven requirements are addressed below used test or technical specification data and physical observations.

1. This functional requirement requires the ability to rotate speed that the family members can operate at. Family member 1 required the ability to rotate at 6,000 RPM, whereas family member 2 rotates at 10,000 RPM. The requirements were verified for each of these family members through observations of motor technical specification sheets and physical observation of active feedback from motor drivers.

2. This functional requirement requires the ability to measure fluid displacement across seal face(s). Family member 1 requires the ability to measure fluid displacement across one seal face, whereas family member 2 requires the ability to measure across two seal faces. The requirement was achieved though the mounting of volume displacement sensors. One volume displacement sensor was mounted on family member 1's framing, whereas two volume displacement sensors was mounted on family member 2's frame.
3. This functional requirement is related to the length of time required to test the seals for characterization. Both family members require the ability to operate for a minimum of two weeks with leakage of 0.5cc. This functional requirement was met through the design of the volume displacement sensor.
4. This functional requirement is related to the ability to regulate pressure of the separate fluid reservoirs in the family members. This requirement was met with common pressure regulators for compressed gases.
5. This functional requirement is related to the use of pressure sensors. Family member 1 requires the ability to measure pressure in one reservoir with pressure sensor, whereas family member 2 requires the use of two pressure sensors. This requirement was met by simply mounting pressure one pressure sensor on family member 1 and two pressure sensors on family member 2.
6. This functional requirement is related to measurement of temperatures at various locations. This is achieved in both systems through the purchase of thermocouples and data acquisition equipment.

7. The functional requirement is related to the ability to rotate the tabletop assembly 90 degrees from horizontal to vertical positions. This requirement is demonstrated through physical observation of the fabricated mechanical system.

6.3 TEST DATA

The first step in the testing procedure for these setups is done statically with no rotation. The test chamber is fully assembled with the mechanical seal and vacuum filled. The purpose of this is to check the system plumbing for leaks. A leak in the plumbing will skew experimental data that is collected. Leaks in the plumbing were found visually and experimentally with the volume displacement assembly. While system is under pressure, a visual inspection for leaks is conducted. If no leaks are found visually, the system is left under pressure and sensor data is recorded. Figure 37 is a graph of the first successful plumbing leak test in family member 1.

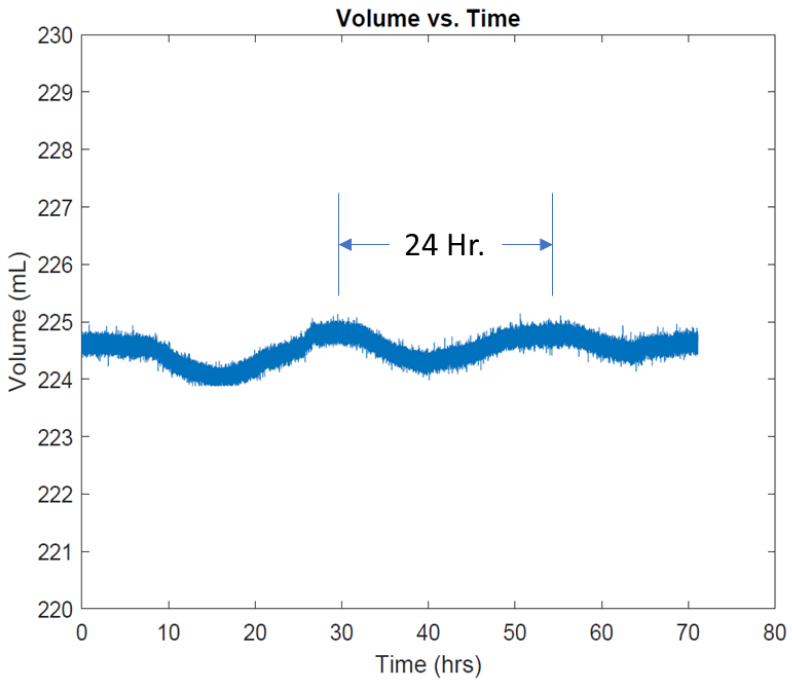

Figure 37: Family Member 1 Plumbing Leak Test

Notice the 24-hour periodic behavior found in Figure 37 which is likely due to the daily temperature fluctuations in the lab that expands and contracts the fluid. After three days of collecting data, the volume displacement sensor does not appear to have last any fluid throughout the system plumbing.

Family Member 1 Data: After the system passes the plumbing leak test, the experiment is conducted. Figure 38 is some graphed data acquired from this experiment. The pressure differential across the primary seal is 40psi and the pressure differential across the secondary seal is 10psi (Figure 24). This experiment ran for almost 150 hours. There are two thermocouples placed in the test chamber near each of the seals. The primary seal thermocouple will be near what is called the primary seal and the secondary seal will be near the secondary seal.

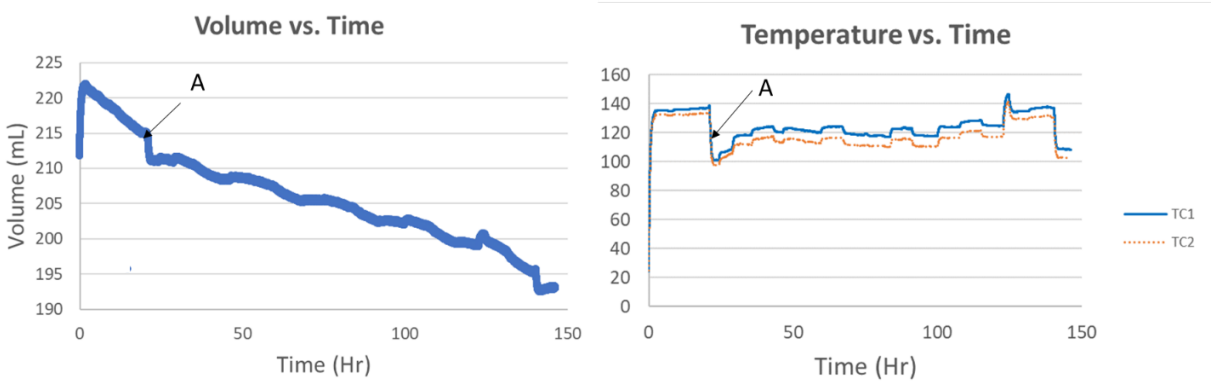

Figure 38: Family Member 1 Experiment

Point A in Figure 38 shows a drop in volume and temperature that appear to be related. The associated drop in volume in the displacement sensor means fluid leaked across the face of the mechanical seal. This leakage will introduce cooler fluid into the reservoir dropping the temperature of the fluid near the mechanical seals.

Family Member 2 Data: The functional requirements of family member 2 required the ability to measure fluid displacement across two seal faces in the test chambers. Figure 39 shows the volume displacement data from an experiment conducted April 28th, 2020 by a group of undergraduate research assistants. The pressure differential across the primary seal is 15 psi and the pressure differential across the secondary seal is 15 psi.

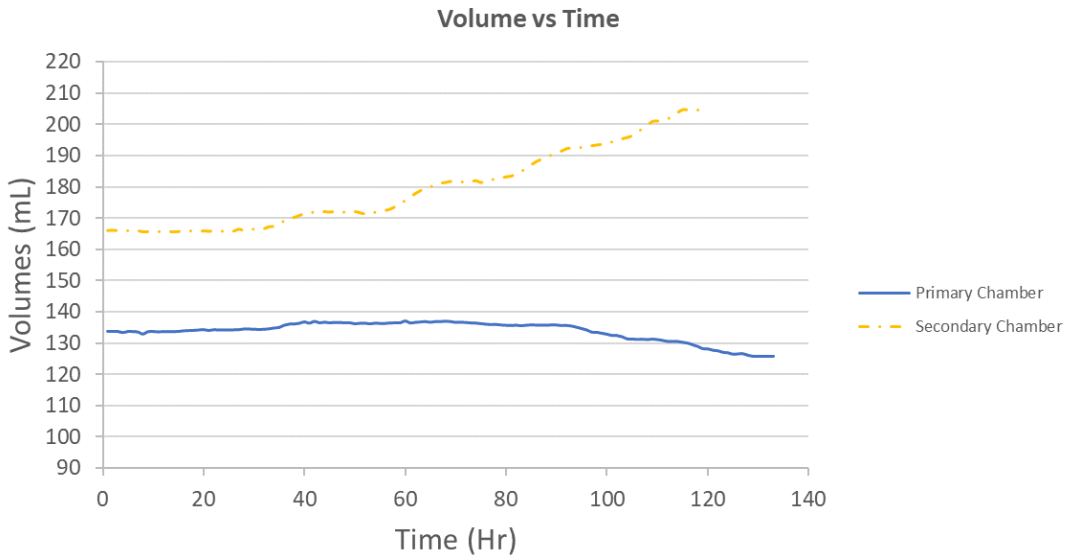

Figure 39: Family Member 2 Data

As shown in Figure 24, the test chamber for the family members are divided into a primary chamber (reservoir), a secondary chamber (reservoir), and a collection reservoir. The primary reservoir fluid displacement sensor is the blue plot and the secondary volume displacement sensor is orange. Notice the volume displacement sensor for the secondary chamber is expanding through the duration of the experiment. In this experiment, the secondary mechanical seal has a pumping behavior.

CHAPTER 7

CONCLUSIONS AND RECOMMENDATIONS

7.1 CONCLUSIONS

Mechanical sealing technology is widely used where high-speed sealing is required – including the oil and gas industry. This industry maintains rotary equipment that must seal hazardous media in harsh environmental conditions. Since new materials are in a constant state of development, familiar standardization entities such as ASME and API cannot keep up with this changing industry. Even with modern-day engineering simulation software that can help with understanding critical aspects of mechanical seal design, an experimental evaluation of these seals is still an important aspect of characterization. Since mechanical seals operate in a variety of media and environmental conditions, a need for a family of experimental setups that can be efficiently developed will be beneficial.

RQ1: How to develop a modular platform for rapid deployment of equipment for mechanical seal characterization?

A modular approach to the development of a product family leads to standardization of components and interchangeability of components throughout the product family. The implementation of similar or standard components into a product family leads to cost and time saving. Interchangeability throughout a product family provides the ability to offer a variety of products to the consumer or rapid deployment of product variants. The benefit of interchangeability in this research is an ability to rapidly produce product variant for characterizing different mechanical seals.

The first step in product development in this research is to tabulate and organize the functional requirements for the family members. The parameters in the functional requirements are organized and compared. The next step is developing an aggregate module architecture for the product family. It is from this aggregate module structure that a shared module architecture is developed. The pattern found in this research is the modules responsible for functional requirements that share the same parameters are component level standardizable throughout the product family. The modules responsible for functional requirements with differing parameters are responsible for physical differences in the family members.

RQ2: How does modular commonality relate to standardized components when using a platform approach for design of equipment to characterize mechanical seals?

Mechanical seals are used in a variety of applications and environmental conditions, but the parameters and metrics required for characterization are similar. For example, a mechanical seal that operates in a centrifugal pump will likely function in different conditions than what is found in an electric motor. Even with the variation in operating conditions between mechanical seal types, the parameters and metrics related to characterization will be similar. Equipment designed for characterization of mechanical seals will have functional requirements related to RPM, pressure, temperature, and fluid displacement. It is these similar parameters related to mechanical seals that provides the benefit of standardization throughout the family of products.

In this research, the functional requirements for the product family were tabulated and organized based on the parameters that relate to the product platform. Once the shared modular architecture is developed, a correlation is found between the shared parameters in the product family and the ability to standardize components in the family. The modules that are common in

the shared architecture can be standardized at the component level. The modules that are unique to the product family members leads to component level inequality.

7.2 FUTURE WORK AND LIMITATIONS

Future work for current setups: In this section, future work considerations for the family members in this thesis are discussed. Over time imperfections develop on the face of mechanical seals during normal operation. The ability to characterize mechanical seals with surface imperfections would be beneficial for field maintenance personnel. Mechanical seals are expensive when compared to many other sealing technologies. The ability for maintenance personnel to visually inspect surface imperfections or flatness with tools such as monochromic lighting and correlate this to an acceptable leak rate will reduce replacement costs.

Another consideration for future work could be testing mechanical seals with engraved spiral designs in the face. Certain engravings in the face of the mechanical seals could reduce heat generation. The reduction in heat generation will reduce associated deflections and increase service life of mechanical seals.

Future work for approach: In this section, future work considerations for the product platform approach are discussed. Sealing technology is broad and encompasses several seal types including mechanical seals. Just like functional requirements for testing a family of mechanical seals share similar parameters, all sealing technology share a common core of parameters. For example, sealing technology is the ability to prevent fluid from flowing into a body of fluid or reservoir. The parameters involved in all sealing technology are pressure, temperature, and fluid displacement. The overlap between parameters involved in functional requirements of mechanical seals and the more general sealing technology is substantial.

Since materials are in a constant state of development and parameters involved all sealing technology are similar, a modular approach to product platform development for all sealing technology can be beneficial. For example, operating temperature, pressure, and allowable leak rates will differ between seals, standardization of components and interchangeability of modules in the family of products will save time and costs.

Research limitations: The limitations related to this research are related to finances and time. Industry financed projects can be demanding and developing a product family requires time. It is easy to fall into a habit of tackling the design of characterization equipment one at a time. This will lead to a duplication of efforts that increases the cost of projects. The upfront costs associated with developing a product platform for characterization should pay for itself over an extended period.

REFERENCES

1. Meyer, M.H. and A.P. Lehnerd, *The power of product platforms : building value and cost leadership*. 1997, New York: Free Press.
2. Malmqvist, J., R. Axelsson, and M. Johansson, *A comparative analysis of the theory of inventive problem solving and the systematic approach of Pahl and Beitz.* Proceedings of the 1996 ASME Design Engineering Technical Conferences, 1996.
3. Stone, R.B., K.L. Wood, and R.H. Crawford. *A heuristic method to identify modules from a functional description of a product*. in *Proceedings of DETC98*. 1998. Atlanta, GA.
4. Simpson, T.W., *Advances in product family and product platform design : methods & applications*. 2013, New York: Springer-Verlag. xviii, 819 pages.
5. Hölttä-Otto, K., *Modular product platform design*. 2005: Helsinki University of Technology.
6. Swan, W.A., *Proposes standardization of car sizes.* The Automobile, 1914. **31**: p. 76-77.
7. Whitney, D.E., *Designing the design process.* Research in Engineering Design, 1990. **2**(1): p. 3-13.
8. Flitney, R., *Seals and sealing handbook.* Sixth edition. ed. iChemE. 2014, Amsterdam: Butterworth-Heinemann, an imprint of Elsevier. xiii, 633 pages.
9. Yu, X., S. He, and R. Cai, *Frictional characteristics of mechanical seals with a laser-textured seal face.* Journal of Materials Processing Technology, 2002. **129**(1-3): p. 463-466.
10. Dahmus, J., J. Gonzalez-zugasti, and K. Otto, *Modular Product Architecture.* 1970.
11. Ul Haq, N., *Design and Modeling of a Piston Accumulator for a Rock Drill and its Fatigue Strength*. 2010.
12. Corporation, M.S., *Displacement Transducers and Accuracy Classification per ASTM E2309*. 2012.
13. Corporation, M.C., *Data Aquisition Handbook.*
14. Kollmorgen. *AKM Servo Motor Selection Guide*. Available from: https://www.kollmorgen.com/onlinebooks/akm/mobile/index.html.
15. Siemens. *1PH81051DS000LA1*. Available from: https://mall.industry.siemens.com/mall/en/us/Catalog/Product/1PH81051DS000LA1.
16. Siemens. *6SL32101PE227UL0*. Available from: https://mall.industry.siemens.com/mall/en/us/Catalog/Product/6SL32101PE227UL0.
17. Siemens. *6SL30401MA000AA0*. Available from: https://mall.industry.siemens.com/mall/en/us/Catalog/Product/6SL30401MA000AA0.
18. Siemens. *6SL32010BE238AA0*. Available from: https://mall.industry.siemens.com/mall/en/us/Catalog/Product/6SL32010BE238AA0.
19. Siemens. *6SL32030CE238AA0*. Available from: https://mall.industry.siemens.com/mall/en/us/Catalog/Product/6SL32030CE238AA0.