INFORMATION TO USERS

This material was produced from a microfilm copy of the original document. While the most advanced technological means to photograph and reproduce this document have been used, the quality is heavily dependent upon the quality of the original submitted.

The following explanation of techniques is provided to help you understand markings or patterns which may appear on this reproduction.

1. The sign or "target" for pages apparently lacking from the document photographed is "Missing Page(s)". If it was possible to obtain the missing page(s) or section, they are spliced into the film along with adjacent pages. This may have necessitated cutting thru an image and duplicating adjacent pages to insure you complete continuity.

2. When an image on the film is obliterated with a large round black mark, it is an indication that the photographer suspected that the copy may have moved during exposure and thus cause a blurred image. You will find a good image of the page in the adjacent frame.

3. When a map, drawing or chart, etc., was part of the material being photographed the photographer followed a definite method in "sectioning" the material. It is customary to begin photoing at the upper left hand corner of a large sheet and to continue photoing from left to right in equal sections with a small overlap. If necessary, sectioning is continued again — beginning below the first row and continuing on until complete.

4. The majority of users indicate that the textual content is of greatest value, however, a somewhat higher quality reproduction could be made from "photographs" if essential to the understanding of the dissertation. Silver prints of "photographs" may be ordered at additional charge by writing the Order Department, giving the catalog number, title, author and specific pages you wish reproduced.

5. PLEASE NOTE: Some pages may have indistinct print. Filmed as received.

University Microfilms International
300 North Zeeb Road
Ann Arbor, Michigan 48106 USA
St. John's Road, Tyler's Green
High Wycombe, Bucks, England HP10 8HR

Downloaded from SHAREOK. Persistent Handle URL: https://hdl.handle.net/11244/4476

7824612

SCOTT, BARBARA KERR
AN ANALYSIS OF CRITICAL AND AESTHETIC IDEAS IN EIGHTEENTH-CENTURY BRITAIN: AN ORIENTATION APPROACH.

THE UNIVERSITY OF OKLAHOMA, PH.D., 1978

University Microfilms International 300 N. ZEEB ROAD, ANN ARBOR, MI 48106

© 1978

BARBARA KERR SCOTT

ALL RIGHTS RESERVED

THE UNIVERSITY OF OKLAHOMA

GRADUATE COLLEGE

# AN ANALYSIS OF CRITICAL AND AESTHETIC IDEAS IN EIGHTEENTH-CENTURY BRITAIN: AN ORIENTATION APPROACH

A DISSERTATION

SUBMITTED TO THE GRADUATE FACULTY

in partial fulfillment of the requirements for the degree of

DOCTOR OF PHILOSOPHY

BY

BARBARA KERR SCOTT

Norman, Oklahoma

1978

AN ANALYSIS OF CRITICAL AND AESTHETIC IDEAS IN

EIGHTEENTH-CENTURY BRITAIN:

AN ORIENTATION APPROACH

APPROVED BY

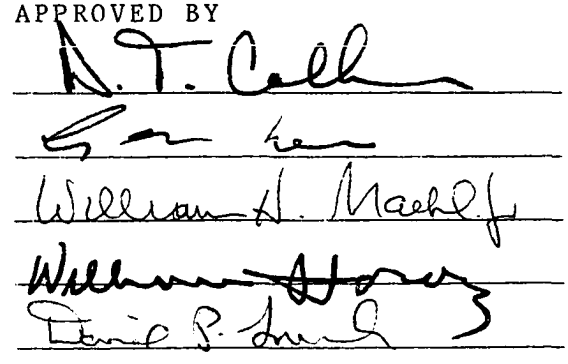

DISSERTATION COMMITTEE

To my husband and best friend

Arthur Ward Scott

And to our son

Robert Bruce Scott

Copyrighted by
Barbara Kerr Scott
1978

ACKNOWLEDGEMENTS

Many people have assisted me in the pursuit of an unusual doctoral program. After completion of an interdisciplinary master's degree (Master of Liberal Studies, Unviersity of Oklahoma, 1970) under the direction of Mr. Cecil Lee, Dr. William Horosz, and Dr. Paul Ruggiers, I desired to continue the same type of program on the doctoral level. Under the auspices of the Department of History an interdisciplinary academic program was designed for me by Drs. Arrell M. Gibson, Dougald T. Calhoun, and Mr. Cecil Lee. The program, consisting of parallel inquiries into the fields of history, art history, philosophy, and literature, permitted me to pursue the materials of distinct but decidedly related disciplines.

To the Department of History my deepest gratitude for its blend of integrity and flexibility necessary to promote and support such an unusual program, and to Dr. William Maehl (now Dean of the College of Liberal Studies) my thanks for his personal involvement in the program. My thanks are also extended to Mrs. Josephine A. Gil, Assistant to the Chair, for her helpful knowledge of departmental guidelines, and for her friendship.

The thesis presented here evolved gradually from several papers written during the course of my studies; I wish to express my thanks to Calhoun and Lee for their help and advice in the structuring and synthesis of these

ideas. I would also like to thank Dr. David French for his patient reading of manuscripts; his suggestions significantly strengthened the presentation of the materials. I am also indebted to the staff of the Interlibrary Loan Department of the Bizzell Memorial Library for their kind assistance in obtaining hard to find materials.

It is most difficult to express my gratitude to the person who has helped me most in these years of study and research. Without the constant encouragement and support of my husband Arthur Ward Scott I would not have been able to complete this program.

TABLE OF CONTENTS


| | Page |
|---|---|
| PREFACE | vi |
| CHAPTER I<br>A SURVEY OF THE RELATIONSHIP BETWEEN CRITICISM AND THE ARTS | 1 |
| CHAPTER II<br>THE THREE ORIENTATIONS OF ANALYSIS IN CRITICAL AND AESTHETIC IDEAS | 53 |
| CHAPTER III<br>THE OBJECT ORIENTATION | 120 |
| CHAPTER IV<br>THE SUBJECT ORIENTATION | 202 |
| CHAPTER V<br>THE CREATOR ORIENTATION | 269 |
| SUMMARY | 319 |
| BIBLIOGRAPHY | 325 |
| PLATES | 332 |

# PREFACE

Many literary historians and critics recognize a change in attitude toward the arts during the course of the eighteenth-century in Britain. The change is reflected in four major areas: the development of a school of aesthetic philosophy, of an influence upon it from traditional criticism, and in turn, of its influence upon criticism, and a faction of rejection of both traditional interpretations and the new aesthetic principles. The new ideas in criticism which arose from the emergence of aesthetics and from other forces led to three distinct critical attitudes in the century. These have been identified as rather general trends in literary theory and taste. Calling attention to these critical attitudes in the period, Walter Jackson Bate refers to neo-classicism, associations of ideas, and the premise of feeling.[1] Ernst Cassirer recognizes the same three trends in all of European critical thought.[2] Referring to the work of the Restoration and the eighteenth century in England as a distinct and coherent school, R. S. Crane notes that the emphasis of interpretation varied according to the frame of reference of the writer.[3] His "frame of reference," as we shall see, is the key to identifying and clarifying the

three critical trends which characterize the period.

Frame of reference, critical perspective, point of view, or orientation all refer to the critic's reference point in his analysis of art. He may, for example, look at art as a mirror or reflection of nature; he may look at art from the perspective of the viewer, as a stimulus to his imagination; he may be concerned only with the creative processes of the artist's imagination; or he may consider the art object in itself with no reference to other criteria.[4] Indeed, an eclectic may form his critical opinion using several of these orientations. Usually, however, one point of view is predominant.

The intent of the present study is to demonstrate that there were three dominant critical orientations in eighteenth-century British thought, that these attitudes were a determining factor in definitions and values--for example, how a critic defined beauty--and furthermore, that the orientations were responsible for the change which is evident in British critical ideas throughout the century. The orientation method which I have proposed is designed to organize the many materials produced in the period, and to demonstrate the relationship between the point of view and critical definitions and values.

Three perspectives are to be defined: (1) object orientation, (2) subject orientation, and (3) creator orientation. These three refer to analysis based on art as

a reflection of nature, art as a stimulus to ideas in the subject, or viewer, and art as an expression of the creative power of the artist. In order to understand critical attitudes in the century, however, we need to look at the conditions which generated them. Therefore I will devote the first chapter to a survey of the arts and general trends in criticism. Next I will turn to a general definition of the three orientations. Finally, a chapter will be devoted to each orientation to demonstrate its impact upon definitions of ideas such as beauty, genius, and art.

## FOOTNOTES TO PREFACE

[1]Walter Jackson Bate, From Classic to Romantic: Premises of Taste in Eighteenth-Century England (Cambridge: Harvard University Press, 1946). See chapter headings.

[2]Ernst Cassirer, The Philosophy of the Enlightenment, trans. by Fritz C. A. Koelln and James P. Pettegrove (Boston: Beacon Press, 1955), first published for J. C. B. Mohr in Tubingen, 1932. Cassirer's sub headings of his chapter on Aesthetics are: "Classical Aesthetics and the Objectivity of the Beautiful," "Taste and the Trend Toward Subjectivism," and "Intuitional Aesthetics and the Problems of Genius," pp. 275-360.

[3]R. S. Crane, ed. Critics and Criticism, Ancient and Modern (Chicago: The University of Chicago Press, 1952), "English Neoclassical Criticism: An Outline Sketch," R. S. Crane, pp. 374-375.

[4]M. H. Abrams, The Mirror and the Lamp: Romantic Theory and the Critical Tradition (Oxford: Oxford University Press, 1953), reprinted as an Oxford Paperback, 1971. Abrams discusses four orientations in his introductory chapter.

## LIST OF PLATES


Page

PLATE 1. "Nature and the Arts" from the frontpiece of James Harris's *Three Treatises* . . . . . 332

PLATE 2. Plate number 1 from Hogarth's *Analysis of Beauty* . . . . . 333

PLATE 3. *Portrait of David Garrick Between Tragedy and Comedy* by Reynolds . . . . . 334

PLATE 4. *David Garrick* by Gainsborough . . . . . 334

PLATE 5. *Portrait of Mrs. Siddons as the Tragic Muse* by Reynolds . . . . . 335

PLATE 6. *Portrait of Mrs. Siddons* by Gainsborough . . 335

LIST OF CHARTS
(Aesthetic Systems)


| | Page |
|---|---|
| Addison | 223 |
| Burke | 228 |
| Hume | 232 |
| Hutcheson | 235 |
| Kames | 239 |
| Gerard | 241 |

# AN ANALYSIS OF CRITICAL AND AESTHETIC IDEAS IN EIGHTEENTH-CENTURY BRITAIN: AN ORIENTATION APPROACH

## CHAPTER 1

## A SURVEY OF THE RELATIONSHIP BETWEEN CRITICISM AND THE ARTS

Any generalization about the arts in a period as broad as the eighteenth century is diffcult and dangerous. Yet, in order to put the criticism of the period in its proper context, we need to look at the artistic products--literature, plastic arts, and music--produced during the century, and also at the predominant attitudes they generated among critics and general audiences. On the part of critics the attitudes consist of critical statements, and on the part of audiences attitudes were expressed in the form of patronage, i.e., economic encouragement and support. For the purpose of a survey of eighteenth-century British art and criticism these two features--art and criticism--can be further divided into four major categories: (1) trends in critical theory, (2) the effect of criticism of the arts,

and of the arts on criticism, (3) the system of values--hierarchy, or genre theory--in the arts, and (4) the genres and styles in the arts. Each of these four points will be considered in turn.

## I

The general change which took place in critical theory can be summarized as a shift from a classical-rationalistic criticism, toward a subjective-associationalistic analysis, and a subjective-emotionalistic response to art. These three trends amount to three distinct ways to talk about art. Let us look at each in terms of method.

In the early part of the century the predominant method was to criticize objects of art as individual works and as representations of genres, with special attention to the method of producing specific generic forms. Criticism in this sense means discussing the object as a special form with characteristic elements. In poetry, for example, we can talk about the form of ode or epic, and about the elements of meter and rhyme; in painting we can talk about the form of portraiture, and about the fundamentals of line, color, and figure; in music we can talk about the form of sonata or fugue, and about the elements of counterpoint, tone, and melody. This can be called a formalist interpretation of art.

Toward the middle part of the century the tendency in aesthetic statement was to analyze response to art as a

physical stimulus. Analysis was directed toward the viewer-audience; it was characterized by a break-down of human nature to its most elementary principles. Thus, we can talk about pain and pleasure, morality and virtue, as well as about fundamental aesthetic modes which cause these responses--the beautiful, the sublime, and the picturesque, among others. This can be called an empirical interpretation of art.

In the later years of the century aesthetic statements often called for an emotional response to the arts in an intuitive fashion on the level of feeling. This last approach to art involved the intuitive process of the creation of art, as well as a correspondent sympathy on the part of the viewer.

The shift in emphasis was a gradual process which proceeded in almost imperceptionable steps from a primary concern for the formal principles of art, to a theory of habitual response founded ultimately on judgment as an element of sensitive experience, to a total lack of rational basis for artistic prejudice--an intuition. All three views can be detected to some degree in the opening years of our period. The formalist position had a long history, which can be seen not only in English works of the preceding century and translations of foreign literature, but which was also the predominant view at the beginning of the century. It was expressed by Pope, Dennis, Robert Morris, Jonathan

Richardson and others in the early years, and later by Johnson, Reynolds and Hogarth.

One of the earliest appearances of the analytical method was Addison's papers on "The Pleasures of the Imagination" which appeared in The Spectator in 1712; while his method was not systematic, it pointed in that direction. This type of interpretation became increasingly popular throughout the century, and its influence can be detected in the writings of some of the later formalists, notably Reynolds. The most well known writers after Addison in this analytical mode were Hutcheson, Burke, Hume, Gerard, and Kames.

Very early in the century Shaftesbury produced a sophisticated rejection of some of the traditional values in art as well as some of the principles of the new analytical method. These principles, we shall see, are Lockean associationalism and empiricism. While he did not clearly and totally discard rationalism as an approach to art, Shaftesbury did provide some justification for its eventual demise. His rather disguised rejection of the two other modes of criticism--the neo-classic formalism and associationalistic empiricism--became an important attitude by the end of the century. We can see similar ideas in Young, Duff, Blake, and Coleridge and elements of the ideas in Reynolds, Gerard, Ogilvie, and others.

There were four veins of criticism and aesthetics in

the century, three of which can be identified with the orientations and the methods defined above. The fourth is an independent development which is reflected in each of the orientations, but which is not itself a definable interpretative mode. These four trends are: (1) the traditional poetic criticism which found its basis in Plato, Aristotle, and Roman sources (which can be generally identified with the object orientation and the critical method), (2) a growing systematic asethetics which can be said to have started with Francis Hutcheson (which gave rise to the subject orientation and can be identified with the analytical method), (3) a vein of enthusiastic intuitionalism which was apparent in only a few critics as a main attitude but which influenced several critics to some degree (identifiable with the creator orientation and the questioning of formalism and analysis), (4) an interpretation of the arts characterized as a literary historigraphy which did not foster an orientation, but which instead can be found as an element within each of the orientations.

Each of these four veins of criticism covers a broad range of topics, including the literary arts, painting, music, and architecture and gardening. Let us look at each of the trends and some of the represenative works. Traditional texts and interpretations included the Greek and Roman classics: Aristotle's Poetics, Horace's Ars poetica, Longinus's peri Hupsous (On the Sublime), Alberti's

Renaissance works, On Painting and On Architecture which were translated into English by James Leoni in 1755; Boileau's Art poetique, John Dryden's translation of du Fresnoy's de Arte graphica, with his introductory essay "The Parallel Between Poetry and Painting"; a number of eighteenth-century materials which followed traditional patterns, such as Alexander Pope's Essay on Criticism, Sir Joshua Reynolds's Discourses on Art, William Hogarth's Analysis of Beauty, Jonathan Richardson's Essay on the Theory of Painting, John Dennis's The Grounds of Criticism in Poetry; and some late eighteenth-century works such as Hugh Blair's Lectures on Rhetoric and Belles Lettres, Lord Kames's second volume of Elements of Criticism (the first volume was written in the vein of aesthetics), Samuel Johnson's Preface to Shakespeare, and John Gunn's translation of Borghese's New and Critical System of Music. The traditional vein of criticism was characterized by an emphasis on methodology--rhetoric and style in the case of the literary arts, technique and style in the plastic arts, and theory in music.

Joseph Addison first introduced aesthetics as a discipline separate from critical theory. (Criticism focuses on the art object, and aesthetics focuses on processes of response and creation.) While his interpretation was written in the context of traditional values, his analysis of appreciation in the viewer called attention to the possi-

bilities of a whole new approach to art. Francis Hutcheson was the first to present a theory of aesthetics which provided a system based on principles of response.[1] His Inquiry Concerning Beauty, Order, Harmony, Design (1725) combined some of the philosophic system of both Shaftesbury and Locke into a method of systematic response based on principles of association and on an innate sense of beauty. Aesthetic treatises and near-aesthetic systems were contributed by David Hume (Four Dissertations, 1757), Edmund Burke (Philosophical Inquiry into the Origin of Our Ideas of the Sublime and Beautiful with "Essay on Taste," 1757), Henry Home, Lord Kames (vol. 1 of Elements of Criticism, 1762), Alexander Gerard (An Essay on Taste, 1759), James Beattie (Essay on Poetry and Music, 1779), and Archibald Alison (Essays on the Nature and Principles of Taste, 1790), among a host of others. Each of these philosophers attempted to explain reactions to beauty (or to other aesthetic modes) in terms of associationalistic psychology.

Criticism basically founded on an intuitionalistic aesthetics includes Anthony Ashley Cooper, third Earl of Shaftesbury's Characteristicks of Men, Manners, Opinions, Times (1711), Edward Young's Conjectures on Original Criticism (1759), William Duff's An Essay on Original Genius (1767), several of William Blake's poems, letters, and annotations--the most important of which was the Annotations to Reynolds's "Discourses" (circa 1808)--and William

Wordsworth's Preface to Lyrical Ballads (1800).

There was a fourth vein of criticism in the eighteenth century which was characterized by a concern for the conditions which gave rise to specific types of literature. Various factors were pointed to as conducive to poetic genius--climatic, geographic, and political conditions, and particularly a concept which has been called "primitivism."[2] This relativistic evaluation of poetry was a complex trend which was reflected in each of the orientations of criticism. Pope, for instance, referred to liberty as a condition for periods of productivity;[3] Johnson said that we must look at the conditions of the age in order to properly judge genius;[4] Duff believed that original poetic genius was likely to flourish in uncultivated periods of society.[5] Included among those who were developing this new historical approach were Robert Wood, John Brown, Adam Ferguson, Richard Hurd, and the Wartons, Joseph and Thomas.

As a generalization it can be said that there were two kinds of comments about the arts in this period (excluding technical works on music, architecture, furniture design, etc.)--criticism and aesthetics. Until the middle of the eighteenth century when they separated and went different though similar directions, criticism and aesthetics were one endeavour. The works of Burke, Addison, Shaftesbury, Hume, Alison, Beatie, Kames, and many others combined features of both criticism and aesthetics. Hutch-

eson's and Gerard's treatises come closer to what is now considered scientific asethetics than any other works in the century. The work of Shaftesbury and Hutcheson, along with the Scottish school of "common sense" eventually influenced German aesthetics of the late eighteenth and early nineteenth centuries. The tradition of literary criticism which was represented in the opening years of the period by Dennis, Pope, and Thomas Blackwell (An Inquiry into the Life and Writings of Homer), and by Johnson, Hurde, the Wartons, and Blake later in the century, was followed by William Hazlitt, Samuel Coleridge and Wordsworth in the nineteenth century.

## II

There was a close relationship between criticism and art in this period. On occasion criticism affected artistic expression, and on occasion artistic expression affected criticism.[6] Examples of both directions of influence can be given. This connection between practices and theory was due, in part, to the theory which bound the arts together for critical purposes. We will look at some obvious instances of influence of art on criticism and of criticism on art, and then at the theory of the "sister arts" which had a somewhat general impact on practice.

Reynolds's pronouncements about historical portraiture appeared after he had been pointing in the genre for several years. Hogarth's Analysis of Beauty, based on the principle of line, was published toward the end of his career. These

two examples are instances of theory following practice and are a kind of justification of art already in existence. On the other hand, Benjamin West's Death of Wolfe was prompted by Reynolds's high regard for the historical-mythological genre of painting, and the plan for Burlington House was adopted because of Lord Burlington's admiration of the Palladian style of architecture, which had come into vogue in the seventeenth century in England. One historian points to at least two cases of Reynolds's impact on contemporary art, attributing the artistic failure of John Bacon's statue of Johnson to Reynolds's influence on the Memorial Committee which chose a classical pose and costume for the fiture,[7] as well as to his influence on the whole school of English sculpture by his condemnation of the moderns and the school of Bernini in particular.[8]

Here, in other words, existing art is explained by theory. In all of these particular instances the critical comments were very specific in nature, addressing themselves to style and method. It is much more difficult to establish specific relationships between more general statements and particular artistic works; but criticism affected the arts of the century, and the arts affected criticism. We shall see that there was a general influence in one direction of the other between theory and practice.

The term "arts" applied to a much broader spectrum of things in the eighteenth century than it does today,

for there was no strict theoretical division between the technical and the fine arts; the technology on which the "useful arts" were based was not a separate endeavour from "natural philosophy."[9] Thus, one might justify a study of scientific advancements along with the fine arts as Penfield Roberts has done in his survey. In one instance there is an obvious connection between the course of the fine arts and the "useful arts," that is, the development and refinements of Wedgwood's superior pottery.

During and preceding the eighteenth century there were efforts on the part of critics to expand theories of art to embrace architecture and gardening.[10] Both in theory and practice sculpture had been considered an extension of architecture for several hundred years. The minor arts--pottery, interior design, furniture making, silversmithing, glasswork--received little attention from most critics, although several technical pattern books appeared in these fields. Critical theory was generally reserved for the "sister arts" of poerty, painting, and music. The minor arts were excluded from consideration on the basis of the theory itself, which was largely dependent on a hierarchy of values placing poetry, painting, and music at the top. As a general rule, then, the critical statements of the period were addressed to the merits or faults, and taste in poetry and drama, painting, music, architecture, and gardening. This theory which bound the arts together had some impact on art

forms. We shall look at the theory of the "sister arts."

Literary theory was one of three interdependent assumptions about the arts which was characteristic of the eighteenth century. R. S. Crane has pointed out that the aesthetic writings of eigtheenth-century England constitute a single school of thought;[11] by this he means that all of the critics assumed certain precepts. Walter Hipple agrees: "The aesthetic theories of the eighteenth century in Britain comprised a clearly defined school, the leading members of which are easily identified by their references to one another's work."[12] Three of these common premises are of specific interest; that all of the arts are related to one another and to nature, that all of the arts fall into genres, and that art has an ultimate purpose.

These attitudes about the arts were part of the cultural climate of the period. Sir Joshua Reynolds recognized the impact of assumptions about art on his contemporaries.

> Opinions generally received and floating in the world, whether true or false, we naturally adopt and make our own; they may be considered a type of inheritance to which we succeed and are tenant for life, and which we leave to our posterity very nearly in the condition which we received it; it not being much in any one man's power either to impair or to improve it. The greatest part of these opinions, like current coin in its circulation, we are used to take without examining or weighing . . . .[13]

Reynolds wrote that the "collector of popular opinion" must examine these beliefs when he attempts to systemize his knowledge, and discard those which do not hold up to reason.

However, Reynolds himself was typical of his era and readily adopted the three premises central to the aesthetic writings of his period: (1) that there is a close relationship among the arts and between the arts and nature, (2) that there is a natural hierarchy of values (genre theory), (3) that art has purpose. The purposes were closely related to the hierarchy of values. The close kinship of the three "sister arts" is a central feature of eighteenth-century theory, as are the genre theory and purpose of the arts; the latter two, however, will be considered below as the third major aspect of this survey of the arts. Let us look at the relationship between the "sister arts" as an immediate aspect of the connection between theory and practice.

Before the opening of the century, Dryden clearly restated the relationship between the sister arts of poetry and painting in his introduction to his translation of du Fresnoy's de Arte graphica. In the introductory essay, "Parallel of Poetry and Painting." (1695), Dryden wrote, "On a serious consideration of this matter, it will be found that the art of painting has a wonderful affinity with that of poetry; and that there is between them a certain common imagination."[14] He stated that he had set aside two months from the business of the translation of Virgil because he considered the commonality of poetry and painting of major importance. The poet and the painter are to proceed in the same manner by forming an idea of perfect

nature in the mind and following that model. Dryden made three methodological parallels between the two arts which were broadly accepted by critics in the eighteenth century: (1) invention, which is necessary to both of the arts, (2) design in painting, which is similar to description in poetry, and (3) coloring which is similar to the use of words--expression--in poetry. Invention according to Dryden is the disposition of the work by which it has unity, harmony, and order. Design and description refer to the symbols of action and passion: in painting this consists of the posture and expression of the figure; in poetry it consists of description, disposition of the action, and proper motivation of the passions. Coloring and expression refer to lights and shadows in painting, and to tropes, versifications, and "all the other elegancies of sound" in poetry.[15]

The theme of relating the three sister arts is woven throughout the texture of eighteenth-century British criticism and aesthetics. It became a truism that needed defense only when it began to lose its general acceptance.[16] The frontpiece of James Harris's Three Treatises graphically illustrates the closeness of the arts and their mutual dependence upon nature. The plate (plate 1) depicts a statue of Diana of Ephesus, representing nature and her capacity to nourish several children; the several arts, her offspring, surround her. He assumed, in other words, that

a poem and a painting are identical twins. Many essays almost treat the three arts as one, with specific attention only to the various senses through which they affect the imagination (especially sight). These aesthetic works deal specifically with the reaction of the audience to stimuli which may be either manmade, as of the arts, or natural.[17] For critics who were searching for a formal principle of beauty in nature, only ambiguous qualities such as harmony, goodness, or truth seemed to be adequately general to tie the arts together. The unity which eluded the formalists was "discovered" by the associationalists to be founded in the mind of the subject-viewer upon psychological principles of association of ideas and the pain-pleasure dichotomy.[18]

The sister arts were further bound together by their special relationship to nature, for each was committed to observing and copying the model before her. The medium might differ, but the model, and the end effect, were common to all the arts. Pope wrote, "First follow Nature . . . Unerring Nature . . . One clear, unchang'd and Universal Light."[19] This attitude was echoed in countless essays upon the various arts throughout the period. Nature[20] for the musician was sound and motion,[21] for the poet it was the passions, i.e., the activities of man,[22] and for the painter it was visual phenomena.[23]

All of this concern for the interdependence of the arts generated a general attitude which can be detected

in some specific examples. The most obvious is the large number of Anacreontic poetry at the end of the seventeenth and at the beginning of the eighteenth centuries.[24] Jean Hagstrum's study demonstrates various levels of influence of the imagery of the pictoral arts upon poetry, and in turn of poetry upon the pictoral arts. A particularly striking example of painterly imagery in poetry is John Dyer's "Gongar Hill." Reynolds's Garrick between Tragedy and Comedy (plate 2) demonstrates an example of an influence of a literary idea upon painting. The idea source of this conception is Reynolds' conviction that the passions should be depicted in a general fashion; the pictoral source is a tradition of representations of Hercules between vice and virtue. Thus, we can see general and sometimes specific relationships between theory and practice.

## III

We will now consider the purpose of art as an element of the hierarchial value system, or genre theory, and the status of both the art and of the artist as a reflection of that hierarchy. The hierarchy of arts in the eighteenth century was integrally related to the purpose of art which was generally held to be two-fold--to instruct and to please. Historically the concern for the moral aim of instruction can be traced to Plato; the interest in the mimetic quality, or principle of pleasure

can be traced to Aristotle. We will look at these two ideas of purpose before examining the hierarchy, since the genre theory was ultimately dependent upon purpose.

The potential for instruction and improvement had been considered one of the primary values of art since the time of the Greeks. Art was an obvious method of instruction in Christian tradition, from visual stories to fables and allegories. By the opening of our period it had become quite sophisticated in theory, especially with Dennis's considerations about the connection between moral purpose and the expression of religious ideas. The element of pleasure was almost as old as instruction. From the time of Addison's Spector papers in which we first see the associationalistic method applied to aesthetic problems, the idea of pleasure took on new importance and was developed into some intricate forms. What exactly constituted pleasure and how it was to be attained was a matter of extreme importance to the moralists as well as to the empiricists. (Moralists like Shaftesbury and Kames considered a moral sense to be a fundamental human principle; empiricists like Addison and Burke found only pain and pleasure to be basic human principles. Some moralists were also empiricists: Kames and Gerard incorporated both an inner sense and the principle of pain and pleasure into their theories.) Thus, by the early years of the century both instruction and pleasure were major aspects of critical theory.

The idea of instruction was generally linked with pleasure, and instruction was founded on imitation. The conviction that certain of the arts could elevate humanity gave greater value to those classes of art in which could be discovered some philosophical justification for causing elevation. The principle of imitation was reversible in the sense that the arts were nature imitated, and in the sense that man was thought to imitate what he observed in the arts. Thus a heroic theme was believed to be responsible for motivating heroic and patriotic action in the audience. The "higher" genres such as tragedy and Biblical and historic themes were therefore more valued for their capacity to improve their audiences.

In 1704 Dennis published The Grounds of Criticism in Poetry in which he stated that the subordinate end of poetry is to please, and the final end is to improve the manners.[25] According to Dennis it is the subject matter of poetry which improves the manners. Thus, religious themes serve ends of poetry by exciting the passions.

Kames echoed the moral purpose of arts in his Elements, published a half a century after Dennis's treatise. While Dennis simply stated that the ends of art are achieved by the excitement of the passions, Kames went much further and developed a complicated system which proposed a sense of virtue which causes the spectator to imitate. The operation of this virtue leads to a habit of virtuous

response in imitation. The virtuous sense is stimulated by examples which can either be observed or read about.[26] (The sophistication of Kames's theory was derived ultimately from Locke's pain-pleasure dichotomy and Shaftesbury's inner sense. The immediate source of Kames'sidea was probably Hutcheson and his followers.) Art is of central importance to this operation of the responses: following the lead of Aristotle, Kames developed the theory that fable is equal to history for the purpose of stimulating virtue,[29] and as real examples are rare, the fable is even preferable to history to stimulate the young to exercise their virtuous sense.[28] Thus, in Dennis we see a critical theory of the didactic potential of poetry which is based on the theme of religious subject matter. In Kames we see a complex system of stimulus-response, with the added factor of an internal sense of virtue. One theory focuses on the subject matter, the other on the processes of imitation.

Both Dennis's and Kames's statements of the moral purpose of the arts are clear and characteristic of the attitude of many writers of the eighteenth century. The other goal, that of pleasure, received as much, if not more critical attention. Addision's series of eleven essays which appeared in 1712, called collectively "The Pleasures of the Imagination," addressed only this end of art. Addison obviously reflected Lockean psychology in

his analysis of pleasure; we receive our impressions through the senses, and the pleasures gained by the observation of nature are of a primary character; the pleasures gained through the reflection on these impressions are secondary. Both the primary and the secondary are the pleasures of the imagination.[29] Because the pleasures of direct experience are greater than those of reflection, the arts cause the more pleasure the more they imitate mature.[30] Addison's concern for the pleasurable properties of the arts is seen again in Reynolds, Johnson, Burke. And finally, although the importance of pleasure is of primary concern in the critical and analytical modes of interpretation, it is not completely lacking in the intuitive vein of Shaftesbury, Young, and Blake.

These two purposes of art are closely tied to the interrelationship of the arts as well as to the hierarchial value system. The psychology involved in the explanation of the process of pleasure was applied to all of the arts, and to nature as well. Because the aesthetic concern was for a quality--beauty--which was thought to affect men in a predictable manner, the tendency was to ask how the mind responded to that quality. While some critics attempted to define the quality which caused pleasure, for example, Reynolds and Hogarth, others turned to the definition of processes of emotional reaction to it as a physical (sensitive) stimulus.

Whether the appeal of the arts was sought after in general principles in external nature, such as harmony, or in an ideal form, or whether it was to be found in a universal principle in human nature, such as the "feeling" of the sublime, a moral sense, a sense of beauty, or the association of ideas, the basic principle was believed to govern all of the arts. The search for a universal principle which would unify and explain a multitude of particular phenomena was characteristic of the eighteenth century, a period in which men were endeavouring to discover that elusive law which would prove a reasonable order in the universe. Newton had reduced the physical universe to one principle; it was left to others to discover the unity of the arts and their appeal to human nature. Concentration on unity tended to amplify and reinforce the traditional sisterhood of the arts. Because attention came to be directed to processes rather than qualities in nature, the search for unity in critical theory shifted from a mimetic principle in which art reflects the external world of nature, to a moral and an empirical internal world of human nature.

The natural hierarchy of value in the arts is reflected in the phrase "minor arts" used above. This assumption of value, related to purpose (instruction and pleasure) and other factors, was characteristic of the eighteenth century. It is generally referred to as the genre theory.

A genre, or category of representation is not to be confused with style which is a characteristic manner of execution. The two may coincide, however, particularly because the traditional concept was that there was a proper mode of execution for each genre. The three media of words, pigment, and tone each encompass several types of representation--genres. For instance, for pigment there are history painting, face painting (portraiture), landscape, genre (domestic themes), and still life. These are listed in a descending hierarchial order that was generally accepted by Reynolds' contemporaries.[34]

Poetry had a long tradition of a value system, in which the epic and the tragedy headed the list. (The medium which we refer to today as literature was called poetry, or poetry and oratory; in the evaluation of eighteenth-century arts it must be remembered that we consider many writings in this category which would not have been acknowledged by eighteenth-century critics. Much of what is now included in literary surveys of the period such as the Tale of a Tub, Robinson Crusoe, Pepy's Diary, and articles from The Spectator, The Tatler, and The Rambler was not considered as part of the poetic art.) Finally, music had its value scale: Charles Avison named church, theater, and chamber music;[32] Dr. Charles Burney included opera in the theater, or dramatic music category.[33]

As there was a generally accepted hierarchy of genres within the arts, there was also a hierarchy among the arts

themselves. James Harris's Three Treatises is a typical and explicit example of this understanding, and it is used here as an illustration because of its influence upon his contemporaries, a fact which is attested to by the large number of references the work and the attention given to his work in reviews.[34] There were five additions of Harris's Treatises during the eighteenth century; it was first published in 1744.[35] His second treatise was devoted almost entirely to the hierarchial relationship of the three sister arts. For a multitude of reasons he found painting superior to music, and poetry superior to painting.[36] Harris, however, made an interesting statement concerning the co-joining of poetry and music (as in opera, oratory, etc.): "It is evident that these two arts can never be so powerful singely as when they are properly united.[37]

With the exception of his comment of the union of poetry and music[38] Harris was in agreement with the majority of his contemporaries. His argument was based on the Lockean sensationalism: the mind is made aware of the natural world and its own affections by means of the senses. Whereas the world is made known through all the senses, the arts are communicated through only two--seeing and hearing. The means whereby the arts affect the mind is their imitation of the natural world, and the only things that can be understood by seeing and hearing are sound, motion, color, and figure.[39] Thus, painting is superior to music because it is capable of

more accurate imitation: "Musical imitation is greatly below that of painting."[40] And poetry is inferior to painting on the basis of imitation.[41] Poetry compared with music on the basis of imitation is an equal.[42] The factor which proves to be the most important in the comparison of music and poetry is not "sound significant," but "sound symbolic," to use Harris's terms.

Harris points out here that there are two views of imitation: the first is a mechanical imitation through the reproduction of sound, figure, color, and motion; the second is imitation through the use of symbolism. When only the mechanical means of imitation are considered, the art of poetry is inferior to the other two arts because it is limited to sound and motion, both of which can be as well, if not better, imitated by music. Sound and motion also have less impact on the imagination than figure and color. However, upon the examination of the subjects that can be imitated by the arts through symbolism, it is found that poetry is far more flexible than the other arts because music and painting are incapable of conveying meaning through symbolic sounds. Through the use of symbols, poetry can quite adequately imitate that which is most affecting--men and human actions.[43] Language, it was argued, is the only means through the sentiments, manners, and passions can be imitated.[44]

Generally the hierarchial system in the arts was reflected

in the social status of its producers. Several forces influenced a change in the status quo of the beginning of the century: (1) theoretical and practical efforts on the part of men like Reynolds, Chambers, Burney, and Wedgwood, (2) a change in artistic taste of the public, and (3) a growth of the art consuming public. The condition of the hierarchy which existed in the opening years of the century and the effotts to change it were immediately related to values in the arts; change in taste and the art public will be considered later.

The two traditional criteria for the value of the various arts (improvement and pleasure) had been discussed and developed for centuries, with the result that the art of poetry received the highest regard. Poetry as a medium of words held a distinct advantage for its own defense, for its defenders were those who produced it, providing its justification in its own medium. Not until the sympathizers of the other arts took up the pen to proclaim the virtues of those arts did they receive their proper airing on the basis of the criteria established for poetry. Burney and Sir John Hawkins served as spokesmen for music in this respect, and Reynolds for painting.

Although a rationale had been established for moral value and hierarchial status among the arts based on instruction and pleasure, in actual practice it was derived from other sources as well. Additional bases for status

were, talents necessary for the execution of the art (especially the distinction between technical training and literary schooling), the social position of the artist of the genre as a whole, the theoretical origin of the art in history, and the necessity or luxury of the end product.

The traditional hierarchy was bolstered by various theories concerning the origins of the arts. A search for the hypothetical beginnings of civilization, prompted by an interest in governmental forms and the question of a golden age versus social and artistic progress, was of interest to those involved in the quarrel of the ancients and moderns, as well as to political theorists like Locke and Hobbes. The issue also brought into focus some aspects of man's nature and of the relationship between civilization and the advancement of the arts. Anselm Bayly argued that music was the "first and immediate daughter of nature, while poetry and oratory are only near relations of music."[45] Poetry and oratory, he wrote, are dependent upon music and must be judged by her standard.[46] Bayly did not consider painting a sister art to poetry and music. His particular evaluation of the relative status of the arts was based, in part, on the honorable antiquity of that art.

Several artists made special efforts to improve the status of their particular art in the eighteenth century.[47] Reynolds worked very hard to improve the social standing of painters and to bring the art up to the intellectual level

of poetry. He admonished the artist to give himself a literary education in order that he might attain a higher quality of art than the mere mechanical reproduction of visual nature;[48] this advice was addressed, in part, to the differences in status between the classically educated gentleman of letters and the artisan. To improve his own education he took the grand tour, an excursion undertaken by gentlemen and scholars to various places on the continent, the sources for classical art. Reynolds was concerned that the artist be a person of quality, able to converse with others of the same standing. Besides an emphasis on a liberal education, Reynolds's efforts to raise the relative value of painting included the creation of a new genre, historical portraiture, which fell immediately below the historical-mythological genre and above face painting in the hierarchy.[49] His evental elevation to knighthood and the presidency of the Royal Academy under the auspices of the crown also helped the social position of painters and repaid his own efforts.

A colleague of Reynolds, Sir William Chambers, greatly improved the prestige of architects and established architecture as a respectable profession.[50] As a member of the East India Company, he had the opportunity to study the Chinese architecture first hand. He became interested in the profession and attended le Brun's lectures in Paris and also studied in Rome. In mid-century he began his career as architect in

London to royalty and aristocracy. He was appointed an architectural and drawing tutor to the Princeof Wales, who as George III appointed him to several important posts, and knighted him. His major publication was printed at royal expense. He was a friend of Reynolds and served as the first treasurer of the Royal Academy.[51]

Another artist whose efforts led to an improvement in both the economic and artistic value of a genre was Josiah Wedgwood. His methods differed greatly from those of Reynolds and Chambers. Wedgwood's purpose was to make English pottery beautiful, useful, and easily obtainable to a large public. To achieve these ends he improved the body, design, and glaze of the product, and refined its distribution. This was all accomplished through a variety of means: experiment, research, the hiring of competent artists and artisans, training of workmen, division of labor, social and political involvement in order to make the workmen comfortable and happy, and involvement in the construction of canals to move materials and finsihed products.[52] The result was a product which could compete with china ware on the basis of artistic merit, and excel it on the basis of availability.

The position of a musician as a mere performer was altered by the efforts of two major musical historians who joined the ranks of the literatti. Burney and Hawkins each contributed large scholarly histories of the art in the

latter half of the century. Burney became a member of London's most fashionable literary society and formed friendships with Johnson and Burke. Although his aspirations exceeded his social rewards--he wished royal recognition of knighthood--he was eventually rewarded on a smaller scale by the king for his monumental historical and critical work--his daughter was appointed to the royal household.[53]

Hierarchy in the arts in practice and in theory was the result of several factors, the most important of which was the genre theory. The relative position of various genres and among the arts themselves underwent a subtle change in this period. That change came about through deliberate efforts of critics to elevate certain genres and arts in theory as well as efforts of artists to improve the quality of art products.

## IV

The eighteenth century saw the development of new genres in all the arts, stimulated by support from a new patron of the arts, the bourgeoisie.[54] We will look first at the character and general effect of this class upon the arts, then at the new forms themselves. After the decline of royal and aristocratic patronage[55] early in the century, most writers and painters worked for a socially broader audience. Johnson's scornful letter to Lord Chesterfield for his lack of financial support for the Dictionary is often given as an example of the tendency to look for a wider

market. Some social historians point to the growth of the reading public and its bourgeois character as a cause of increased demand for literature in volume as well as for new forms.[57] The increase in publishing also opened a new market for artists--illustrations for books. Another factor in the changing status of art was the economic power of the new class which had more money to spend on the arts.

The literary and the plastic arts were not the only ones to benefit from changing social conditions: music and the lesser arts were also affected. The public had a larger exposure to music through the construction of public parks, theaters, and availability of public performances. Special occasions such as the rehearsal for Handel's Alexander's Feast, his open air performance of the Water Music and Royal Firework Music, and his charity performances of the Messiah also provided opportunities for public entertainment.

Several factors led to innovations in the minor arts. The new moneyed class demanded china ware for its newly acquired habit of tea drinking.[58] Collections of china had to be housed, as did collections of books; the need for special types of furniture was soon filled by Chippendale and other cabinet makers.[59] Wedgwood and others provided for a large public good English versions of products which had been imported from around the world.

Not only did the character of the art consuming

public change during the eighteenth century, but the character of the artist changed as well. In the preceeding century Dryden, Rochester, and Milton, for example, had been highly respectable gentlemen or aristocrats, writing for a gentlemanly and aristrocratic audience. The artists of the new century were solidly middle class for the most part, and some were of lower social origins. Summarizing the increasing middle class leadership, J. H. Plumb has written, "In the seventeenth century literary culture was largely dominated by the Court. Swift, Addison, Steele, Pope, and the other Augustans [eighteenth-century writers] made the middle class the arbiters of taste."[60]

The development of new genres in all of the arts which satisfied the needs and tastes of this new and larger public went hand in hand with the change in status of the arts and the artists of this period. In painting the new form was historical portraiture; music had the oratorio and comic opera; literature had the domestic drama. Besides these genres, was a reemergence of some old ones. Reynolds's new genre of historical portraiture was not only popular with the consuming public, it was profitable to the artist himself. He also justified it on traditional critical grounds which placed it high within the hierarchial system; It ranked above "face painting" and below the historical-mythological genre. Whereas the higher genre could elevate the imagination of the viewer to the general through form

(beautiful figures) and idea (general passions), the lower status of portraiture was limited to the particular individual (who may be both ugly and deficient of character). Reynold's new type of portraiture raised the level of individualistic representation by pacing the sitter (the particular) in an historical or mythological context (the general) and idealizing his characteristics (a generalizing process). This form-style called upon the artist to employ his "poetic imagination" as well as an accurate observation of nature. Not all of Reynolds's portraits in this genre, to be sure, were successful, but one of the most pleasing is Garrick between Tragedy and Comedy (plate 3). The validity and success of his work can be demonstrated by a comparison of Reynolds's Garrick with a more traditional portrait (plate 4). The mythological setting in which Garrick is forced to make the choice between tragedy and comedy brings to mind the theme of Hercules's choice between virtue and pleasure, and has at the same time provided an opportunity for the artist to reveal an important aspect of Garrick's personality. Another illustration of the difference between Reynolds's method and traditional portraiture is the difference between his Mrs. Siddons as the Tragic Muse, and Gainsborough's portrait of her (plates 5 and 6). Reynolds's

portrait is another good example of his historical portrait genre; it displays something of Siddon's dramatic ability; Gainsborough's portrait shows a highly fashionable woman of the eighteenth century whose apparent demeanor is so cold that little visual rapport is established with the viewer.

Portraiture was by far the most popular form of painting in the eighteenth century. Englishmen had some taste for landscape and still life as long as they were painted by foreigners. Chardin and the Dutch genre painters were preferred by collectors in these areas. Reynolds recognized the superiority of these artists in the minor genres. Landscape increased in popularity throughout the century, but was most successful as a backdrop to portraiture; Gainsborough executed many portraits in a rural setting. Reynolds recognized Gainsborough's skill in landscape in his fourteenth Discourse; yet the genre was not popular with the public--they didn't buy landscapes-- and many remained in Gainsborough's estate when he died.[61] Historical painting was so unusual in the century that Richard West's historical subject completed in 1776 caused great interest; but it remained unsold.

Both the novel and the domestic drama were highly successful literary forms developed in the eighteenth century. Hauser, among others, writes that these genres were the result of the dissolution of court art (the high Baroque) and the influence of a new educated class, the

bourgeoisie.[62] The eighteenth century was not a period of great epics and heroic dramas. The Greek and Roman Classics were indeed being translated, but there were few epics being written in the English language in this period. Although tragedy retained its popularity with the theater-going public, its quality declined. The "genteel" taste of the time demanded revisions of older plays, Shakespeare's included, to clean up "bawdy" language and behavior. (Johnson and a few others deplored such alteration of Shakespeare.) Two new forms, the social drama and the comic opera became increasingly popular stage genres.[63]

The new novel and the social drama were much more successful forms than the older epic and tragedy. Richardson's Pamela and Defoe's Robinson Crusoe were in the hands of a rapidly growing reading public. The social message of such works as these had much in common with the message of the domestic dramas. Crusoe, a non-tragic, middle class character was able to impose order on the chaotic world into which he was thrust by accident.[64] Pamela was also able to conquer her circumstances through determination and the application of her convictions. In the domestic story characters were not pitted against single invincible foes, as had been the rule in tragedy and epic, but rather against social institutions and situations--anonymous forces which called upon them to use reason, force of moral character, and insight.[65]

Two new musical forms were introduced into England in the early part of the century, one a modification and perfection of an older form, the other a purely English innovation--the oratorio and the ballad opera. One music historian maintains that the oratorio was more than an adaptation of the European oratorio, that it was a purely new genre created to meet the special demands of English taste--Englishmen did not care for the Italianate opera.[65] Of the twenty-four oratorios written by Handel, many are still performed today,[66] the most popular of which is the Messiah. Handel's use of the formula of the oratorio may have been an accident of fate,[67] but its popularity ultimately exceeded that of the opera.

The state of musical taste fluctuated considerably during the century; opera enjoyed a couple of periods of mild popularity, but ballad opera had become a major musical genre by the third quarter of the century. John Gay's and Peupsch's ballad opera, The Beggar's Opera (1732) introduced the form to a delighted public, and it enjoyed tremendous popularity for several reasons. Its use of popular musical themes and its astringent political satire are the reasons most often cited for this public acclaim.[68] The vogue for the ballad opera increased after 1762 with the introduction of a new ballad opera, Love in a Village, by Arne. The public had again grown weary of the Italian opera, by that time in its second decline. Several writers

followed Arne's and Gay's examples in the popular genre, but until Gilbert and Sullivan in the nineteenth century, most of their names are familiar only to historians.[69]

A third musical genre, the sonata-allegro was also introduced into England in the latter part of the century. The major innovators in the sonata form were C. P. E. Bach, Haydn, and Mozart, all of whom performed in London at one time or another. Like the oratorio, the sonata was an old form that underwent major changes in the eighteenth century. Originally it had been a form similar to the cantata; whereas the cantata was a composition for voice, the sonata was a composition for instrument. Like the oratorio also, it succeeded in pleasing the musical public. The preference for the sonata and the ballad opera over the Italian opera was related to the lighter style of the rococo, as we shall see later.

As was the case in literary and plastic arts, the public was the rising middleclass. The crown was the only major private source of patronage for musicians in England outside of the Church, and it had proven to be a very insecure source. The popularity of public performance is attested to by the presentations of Handel's music. For the rehearsal of the fireworks music twelve thousand people paid for admission.[70] Operas and oratorios were presented in theaters, and other musical entertainments in various public parks. Two music societies were established

in the century. In summary there seems to have been an increase in public and private performances, and in the amount of music produced in eighteenth-century England.

The changes in the types of arts produced in the century appears to have been directly related to the rise of a new middleclass public whose taste was different from the courtly art consuming public of the preceeding century. This new rich class created demand in terms of new forms--china, pottery, furniture, novels, domestic dramas, musical performances--and in terms of volume. The middle class gave rise to a new taste, a new artist, and a new audience.

V

We have seen that taste in genres in all of the arts changed; taste in styles also changed. The eighteenth century has been characterized as the Age of Reason, the Augustan Age (in part), the Enlightenment, the Age of the Industrial Revolution, the beginning of the Romantic, and others. Each term seems to be partially fitting, for it was a time of rapidly fluctuating ideas, tides of taste, and revolution of beliefs as well as of social orders. The ecclecticism in taste can be demonstrated by pointing to the wide variety of styles and temporary trends in architecture alone, from the neo-Classical and Palladian Burlington House, to the Baroque Blenheim Palace, to the neo-Gothic Strawberry Hill, and the chinoiserie of Kew

Gardens. All of these monuments were undertaken within the first two-thirds of the century.

There was a considerable change in style as well as genre during the eighteenth century in all of the arts. Styles (or technique, manner of execution) characterized as Baroque, Rococo, neo-Classic, Palladian, neo-Gothic and chinoiserie are well known and recognized in their application to the visual arts; the terms were originated to describe differences in form of vision.[71] Styles are also apparent in literature and music even though they are more difficult to determine using the well established visual criteria. Sypher defines literary styles in terms analogous to visual criteria with considerable success. He writes, "there are analogies between types of formal organization in different arts, though the arts themselves differ in medium and content."[72] Edward Lowinsky defines music in equally successful terms.[73] Style at the beginning of the eighteenth century in literature can be characterized broadly as neo-classic (Sypher finds elements of Baroque and Rococo), and as Baroque in music. At the end of the century it can be characterized as "pre-Romantic in literature and Rococo in music." ("Pre-Romantic" is a very misleading term and is only used here for lack of any other.) As a generalization it can be said that the courtly, highly formalistic Baroque was replaced by the more intimate and

lighter Rococo and "pre-romantic."

Style and form, as well as attitudes toward them, reflect changes in man's conception of himself and the universe. Bate writes:

> Conceptions of the nature and purpose of art closely parallel man's conceptions of himself and of his destiny. For art, in one of its primary functions, is the interpreter of values, and aesthetic criticism, when it rises above mere technical analysis, attempts to grasp and estimate these values in order to judge the worth of the interpretation.[74]

In the same vein Sypher writes that the formal organization of the arts reflect the internal changes in society. He says further,

> A style is only an aspect of the course of a larger history, and the critic must try to relate the emergence of different styles with the emergence of the human attitudes which represent themselves, in one direction, by the arts . . . . There are, in short, relations between styles and history.[75]

In these terms let us summarize eighteenth-century style and form in the arts.

The early eighteenth century reflected a classical mode of thought in style, form, and content; the late century reflected a refutation of these classical concepts. In literature, philosophy, music, architecture, gardening, and painting, a faith in the ultimate reasonable order of the universe is apparent in the opening years of the century. Harmony, order, rule, and man's reasoning capacity characterize Dryden's,[76] Pope's, and Dennis's criticism and poetry. Dryden's and Pope's perfectly balanced heroic couplets are called "nature methodized" by Pope himself--the poet who

believed that the artist's charge was to lay bare what most men could understand but not verbalize.[77] His famous couplet on Newton demonstrates this faith in the ultimate unity and order of the universe:

> Nature and Nature's Laws lay hid in Night:
> God said, Let Newton be: And all was light.[78]

Translations of Greek and Roman classics, imitations of Anacreon Virgil, Cicero, poems in the form of odes, pastorals, elegies, and satires, and prose in such forms as dialogues and epistles all hark back to classical models, order, and regularity. The form, or genre, of a poem, prose work, musical composition, or painting was of extreme importance to the artist of a classical mind[79] who wished to make his audience aware of the tone and subject of his work. Each kind of form had a traditionally established set of rules to guide the tone and content--the effect was called decorum. If these standards were obviously ignored, the end product was humor or satire. Thomas Gray's "Ode to the Death of a Favorite Cat, Drowned in a Tubof Gold Fishes" and Pope's Rape of the Lock and the Dunciad are examples of playing with an established generic form. Form and style were integrally related for the classicist; each was an expression of the regularity and order--the reasonableness--of the universe.

About the middle of the century there was a shift in literary taste which was stimulated by several factors: the rise of a new affluent class; influence of gothic, folk

art forms, antiquaries, oriental arts; and, most particularly, a new attitude toward man himself. The new orientation was brought about by speculation on associationalistic behavior, on ideas of origins of governments, religions, society, the arts--on theories, in short, which concentrated on the character of man in nature rather than on nature as a reflection of God's intent. The concentration on man generated the idea that one is aesthetically pleased with irregularity rather than with regularity. Taste for the irregular in art was apparent at the beginning of the century in gardening. Beginning with Addison theories for such preferences were gradually developed. In 1745 Samuel Say, a minor critic, was the first to state that variety rather than regularity was delightful in poetry.[80]

Interest in man and in the new discoveries of non-European societies, archeological discoveries, the non-classical past (Gothic and Druid, for example), all reinforced the taste and the justification for irregularity. This taste was answered by MacPherson's Ossian, Collins's An Ode on the Popular Superstitions of the Highlands of Scotland, Considered as the Subject of Poetry, and Blake's and Burns's poetry. A prodigious amount of serious prose work was addressed to the sources of man's motivation, passions, behavior, and the origins of his institutions. Examples of these are, Burke's Philosophical Inquiry into the Origin of Our Ideas of the Sublime and Beautiful, his

Inquiry, Reflections of the French Revolution, and his An Appeal From the New to the Old Whigs; Hume's Essay on Human Understanding and Moral Essays; Gibbon's History of the Decline and Fall of the Roman Empire; Smith's Wealth of Nations; Blackstone's Commentaries on the Laws of England; Burney's General History of Music, and many others.

The same shift in taste during the century can be demonstrated in music styles. The Italianate Baroque exemplified by Opera, and the German Baroque style of Handel, with its complex fugal forms and dense texture, was replaced by the less rigidly formalistic sonata which stressed a simple melodic line supplemented by harmonic voices. The lighter comic opera which replaced the opera and, to a lesser extent, the oratorio also reflected the same change in style.

Painting styles also changed during the course of the century, but to a lesser extreme than the literary arts and music. A real revolution in style is not apparent until well into the nineteenth century, probably because of the dominant position of the Royal Academy. The early eighteenth century was dominated by James Thornhill, who painted in the Italianate Baroque in the historical-mythological genre, and in the traditional English portrait style.[81] This imported Baroque style was succeeded by traditional and historical portraits which dominated English painting. Hogarth, Reynolds, and Gainsborough held the field in painting throughout the

middle and late years of the century, and with the exception of Gainsborough's landscapes (which did not sell), style and content changed very little. Under the influence of Reynolds's formalistic-classicistic dicta, historical and allegorical subjects and settings in painting and sculpture emerged in the later years.[82]

Architecture under the influence of Wren, Kent, Vanbrugh, Palladio (via Lord Burlington) and Chambers reflected the same sense of harmony and unity as the heroic couplet. The facades and floor plans of Greenwich Hospital, Burlington House, and Blenheim Palace reflect the balance and unity of an ordered universe. The intrusion into the classicizing elements in architecture came through the "lesser branches of architectural design," that is, interior decorating, gardening, furniture, and through the lesser arts such as pottery, and silver work. All of these arts were less influenced by traditional formal rules, and therefore were much more receptive to new styles. The effect of the chinoiserie, for example, is apparent in Chippendale furniture and in pottery. The influence of the Gothic is also seen in furniture and in ornaments. The garden form reflects an English taste for the natural as opposed to the formal French garden. By the middle of the century landscape gardening had become a popular hobby. This was an area where the amateur could express his individual preferences. At the same time it was a serious

form of artistic expression--one which engaged such figures as Burlington, Pope, Kent Lancelot Brown, and Chambers. The English garden of this period absorbed all of the exotic and non-classical influences which were, for the most part, very slow to enter the major genres. Thus, the gothic, the oriental, the naturalistic, and the rustic became popular styles in the minor genres.

The state of flux in eighteenth-century England extended to the realms of aesthetic ideas, artistic styles, popularity of certain genres over others, a rapidly growing art consuming public, and a new type of artist. The trends were many. The primary materials are prodigious. Eighteenth-century Britain was a prolific and complex era as we can see by the evidence of documents, monuments, and artifacts. In the following chapters I will turn to the task of ordering aesthetic and critical ideas of the period using the orientation method previously described.

## FOOTNOTES TO CHAPTER I

[1]Rene Wellek, A History of Modern Criticism, 4 vols. (New Haven & London: Yale University Press, 1955). vol. 1: The Later Eighteenth Century, p. 107.

[2]Ibid., pp. 123-132.

[3]Alexander Pope, The Twickenham Edition of the Poems of Alexander Pope, 11 vols., gen. ed. John Butt (London: Methuen; New York; Yale University Press, 1942-1969), vol. 1: Pastoral Poetry and An Essay on Criticism, eds. E. Audra and Aubrey Williams (1961), lines 681-692, pp. 316-318.

[4]Samuel Johnson, The Yale Edition of the Works of Samuel Johnson, ge. eds. E. L. McAdam, Jr., Donald Hyde, and Mary Hyde (New Haven: Yale University Press, 1958- ), vol. 7: Johnson on Shakespeare, ed. Arthur Sherbo (1968), p. 81.

[5]William Duff, An Essay on Original Genius, John L. L. Mahoney, ed. (Gainsville, Fla.: Scholar's Facsimilies & Reprints, 1964), pp. 260-296.

[6]Wellek believes that criticism had more effect on art than art on criticism, pp. 6-7.

[7]A. S. Turberville, ed., Johnson's England: An Account of the Life and Manners of His Age, 2 vols. (Oxford: Clarendon Press, 1933), 2:91.

[8]Ibid., pp. 89-90.

[9]Penfield Roberts, The Quest for Security, 1715-1740, The Rise of Modern Europe (New York: Harper & Row, 1947; reprinted Harper Torchbooks, 1963), pp. 176-200.

[10]The most notable works on architecture before the Eighteenth Century are: On Architecture by Leon Batista Alberti, 1458, and The Four Books of Architecture by Andrea Palladio, 1570.

[11]R. S. Crane, ed., Critics and Criticism, Ancient and Modern (Chicago: University of Chicago Press, 1952), p. 375.

[12]Walter J. Hipple, Introduction to An Essay on Taste, by Alexander Gerard (Gainsville, Fla.: Scholar's Fascimilies & Reprints, 1963), p. ix.

[13]Sir Joshua Reynolds, Discourses on Art, Robert R. Wark, ed. (New York: Macmillan & Henry E. Huntington Library & Art Gallery, 1959; Collier Books reissue ed., 1966), Discourse VII: 107-108; hereafter cited with discourse number and page reference.

[14]John Dryden, Essays, W. P. Ker, ed., 2 vols. (New York: Russell & Russell, 1961), 2:121.

[15]Ibid., pp. 138-153. Charles Avison drew similar parallels between music and painting, infra, ch. 3.

[16]Jean Hagstrum, The Sister Arts: The Tradition of Literary Pictorialism and English Poetry from Dryden to Gray (Chicago: University of Chicago Press, 1958). This is an excellent study of the relationship between poetry and painting which points out the similar use of terms and the use of pictorial imagry in the eighteenth century. The first section is devoted to an historical survey of the tradition up to the time of Dryden; the latter half pertains to the eighteenth century.

[17]To name a few titles which deal with the class relationship between the arts: Observations on the Correspondence Between Poetry and Music, Daniel Webb, 1769; Of the Sister Arts, Jacob Hildenbrand, 1734; Three Treatises, The First Concerning Art, The Second Concerning Music and Poetry, The Third Concerning Happiness, James Harris, 1744.

[18]These works, most of which are highly regarded today, are psychological footnotes to Locke. Included in such writings are: Burke's A Philosophical Inquiry into the Origin of the Sublime and Beautiful (1756) and the introductory essay "On Taste" 1757; Alexander Gerard's An Essay on Taste, 1759.

[19]Pope, An Essay on Criticism, 1: lines 69-71, p. 246.

[20]This is an oversimplification of the word "nature." A. O. Lovejoy gives an insight into the complexity of the concept in Essays in the History of Ideas (Baltimore: John Hopkins Press, 1948), pp.

[21]Daniel Webb, Observations on the Correspondence between Poetry and Music (New York: Garland Publishing Co., 1970; a fascimilie of the London edition of 1769 in the Yale University Library). Webb's ideas are typical of music criticism. His theory borders on physiology and recalls Diderot's aesthetic theory. Webb wrote that the "correspondence of music with passion springs from a coincidence of movements . . . of pride, sorrow, anger, and love" (pp. 13-14), and that these are analogous to movements of the soul (pp. 39-40). The imitation of sounds of nature was a controversial issue: some of the theorists believed that sound alone could imitate action, for example, the rising and falling of the scale (Webb, pp. 140-143); see also James Harris, Three Treatises. The First Concerning Art. The Second Concerning Musick, Painting and Poetry. The Third Concerning Happiness. 3rd ed. rev. and cor. (London: I. Nourse and P. Vaillant, 1772), pp. 65-67. Another music critic wrote that there can be no similarity between sounds and things; see Charles Avison, An Essay on Musical Expression (New York: Broude Brothers, 1967; a fascimilie of the first edition, London 1775), pp. 57-58.

[22]Harris, pp. 82-94 and Johnson on Shakespeare, 7:53 et passim.

[23]Harris, pp. 61-65, 85; Reynolds, III: 43-46; also William Hogarth, The Analysis of Beauty, ed. Joseph Burke (Oxford: At the Clarendon Press, 1955; a fascimilie of the first ed., 1753).

[24]Advice-to-painter poems had had a long tradition, but became particularly popular during the Restoration. One researcher found forty-five examples written between 1660 and 1700. Mary Tom Osborne, Advice to Painter Poems, 1633-1856: An Annotated Finding List (Austin: University of Texas Press, 1949).

[25]John Dennis, Critical Works, 2 vols., ed., Edward Niles Hooker (Baltimore: John Hopkins Press, 1939), 1:325.

[26]Henry Home, Lord Kames, Elements of Criticism, 2 vols., 8th ed. (London: Vernor & Hood, 1805), 1:50.

[27]Ibid., pp. 73-75.

[28]Ibid., p. 85.

[29]Joseph Addison, Richard Steele and others, The Spectator, 5 vols., ed. Donald F. Bond (Oxford: Clarendon Press, 1965), vol. 3:527-582. Addison's conviction that the imagination is inferior to the senses recalls Hobbes's definition of imagination as "decaying sense."

[30]Ibid., no. 414, p. 550.

[31]Reynolds referred regularly to genres in his Discourses. He discussed the landscape to a great extent in the fourteenth century, which is an eulogy of Gainsborough.

[32]Avison, p. 122.

[33]Dr. Charles Burney, A General History of Music From the Earliest Ages to the Present Period, 4 vols, 2nd ed. (London, 1789), 2:viii-ix.

[34]Thomas Twining, Aristotle's Treatise on Poetry, translated: with notes on the translation and on the original: and two dissertations on poetical and musical imitation (London: Payne & Son, 1789.

[35]Harris's Three Treatises were published in 1744, 1756, 1772, 1783, and 1792.

[36]Ibid., pp. 69, 74.

[37]Ibid., p. 102.

[38]This type of comment about the union of poetry and music was typical of musical theorists, but atypical of literary and art critics-they usually did not discuss it. Some writers on music who expressed a feeling for the superiority of music joined with poetry were Webb, Avison, and Bayly. The issue on music alone centered on the difficulty

of defining the meanings of musical tones in terms of ideas; thus, when the ideas are joined with music in the form of poetry, the problem was resolved and it could be claimed that this was the highest form of art since it combined the emotional quality of music with the symbolic quality of poetry.

[39]Harris, pp. 55-56.

[40]Ibid., pp. 59-60.

[41]Ibid., p. 73.

[42]Ibid., p. 90.

[43]Ibid., p. 85.

[44]Ibid., p. 90.

[45]Anselm Bayly, The Alliance of Musick, Poetry and Oratory (London, 1789), p. 2.

[46]Ibid.

[47]For views about the status of the artist in eighteenth-century England see: James L. Clifford, ed., Man Versus Society in Eighteenth-Century England: Six Points of View (Cambridge: At the University Press, 1968), pp. 70-84.

[48]Reynolds, VII:118-122.

[49]Ibid., VII:106.

[50]Elizabeth G. Holt, ed., A Documentary History of Art, 3 vols. (Garden City: Doubleday Anchor Books, 1958), vol. 2: Michelangelo and the Mannerists: The Baroque and the Eighteenth Century, pp. 293-294.

[51]Ibid., p. 294.

[52]Anthony Burton, Josiah Wedgwood (New York: Stein & Day, 1956).

[53]Roger Lonsdale, Dr. Charles Burney: A Literary Biography (Oxford: At the Clarendon Press, 1965), pp. 324-332.

[54]Several historians draw attention to the impact of this rising powerful class on the arts, among them: Arnold Hauser, The Social History of Art, 4 vols., trans. Stanley Godman (New York: Alfred A. Knopf, 1951); Vintage Books ed., 1951); Leo Gershoy, From Despotism to Revolution, The Rise of Modern Europe (New York: Harper & Row, 1944; Harper Torchbooks, 1963); Turberville, Johnson's England. Wellek denies this relationship largely because his analysis is based on the author rather than on the general reception of his materials (History of Modern Criticism, see especially p. 9).

[55]The Hannoverians were notorious for their lack of support and outright dislike of painting and poetry; they did support the musical arts.

[56]Hauser, 3:51-52.

[57]Ibid., pp. 38-45.

[58]Turberville, 2:35.

[59]Ibid., p. 141.

[60]J. H. Plumb, In the Light of History (New York: Delta Publishing Co., 1972), p. 54.

[61]Turberville, 2:8.

[62]Hauser, 3:3-37.

[63]Turberville, 2:160-174.

[64]Hauser, 3:48.

[65]Ibid., p. 84.

[66]Clifford, pp. 96-98.

[67]Turberville, 2:46.

[68]Ibid., p. 198.

[69]Earl R. Wasserman, ed., Aspects of the Eighteenth Century (Baltimore: Johns Press, 1965), pp. 163-164.

[70]Turberville, 2:196.

[71]Heinrich Wölfflin defined styles in terms of visual qualities such as linear and painterly, clearness and unclearness, etc., in Principles of Art History, trans. M. D. Hottinger (New York: Bell & Sons, 1932; Dover edition, 1950).

[72]Wylie Sypher, Four Stages of Renaissance Style: Transformations in Art and Literature, 1400-1700, (New York: Doubleday, 1955), p. 9.

[73]supra, p. 20 and n68.

[74]Walter Jackson Bate, From Classic to Romantic: Premises of Taste in Eighteenth-Century England (Cambridge: Harvard University Press, 1946), p. 1.

[75]Sypher, p. 6.

[76]Dryden died in 1700.

[77]Pope seems to be referring to an idealized perfect pattern of speech: the iambic pentameter with the caesura is a representation of natural speech patterns.

[78]Alexander Pope, The Twickenham Edition of the Poems of Alexander Pope, 11 vols., gen. ed. John Butt (London: Methuen; New York: Yale University Press, 1942-1969), vol. 6: Minor Poems, ed. Norman Ault and John Butt, p. 317.

[79]Tillotson states that only three major writers of the eighteenth century did not have a classical education--Chatterton, Burns, and Blake. Geoggrey Tillotson, Paul Fussell, Jr., and Marshall Waingrow, ed., Eighteenth-Century English Literature (Harcourt, Brace & World, 1969), p. 11.

[80]Ibid., p. 15

[81]Ronald H. Paulson, Hogarth: His Life, Art, and Times, 2 vols. (London: Yale University Press, 1971), 1:86-87.

[82]Turberville, 2:85.

# CHAPTER II

## THE THREE ORIENTATIONS OF ANALYSIS IN CRITICAL AND AESTHETIC IDEAS

In order to appreciate the continuity of eighteenth-century British aesthetic thought and to understand the Zeitgeist of this delightfully complex and productive era we need a system of organization which will incorporate a very broad range of materials into a manageable form. The orientation method of analysis I shall outline in this chapter is flexible enough to include all of the critical material of this period, and at the same time it is specific enough to provide for a variety of ideas within each of the three major modes as modifications of those modes.

Several topics will be taken up in this chapter in order to clarify the application of an orientation approach to the organization of eighteenth-century British aesthetic ideas: (1) a brief survey of studies which have been done in this area, (2) an overview of the three major modes and their sub-modes in an outline form, (3) some historical and philosophical factors concerning these attitudes, (4) three areas which can be affected by a critic's orientation, and

finally (5) an examination of each of the three modes and their sub-modes with specific attention to representative critics.

## I

Some extant histories of eighteenth-century British aesthetic and critical materials have dealt with a number of specific problems. The classical study of the history of aesthetics by Bernard Bosanquet[1] covers the period only very briefly and is structured on a review of individual writers. Most literary historians cover the eighteenth century in terms of styles, genres, or individual authors. Some historians have approached the period from the perspective of the history of ideas: A. O. Lovejoy[2] has traced some major trends in the evolution of the meaning of the word nature (among many other contributions in this field); Milton C. Nahm[3] has studied the ideas of genius and creativity; Walter J. Hipple[4] has looked at the modes of aesthetic qualities in the century; and Samuel Holt Monk[5] has written an invaluable history of the idea of the sublime. R. S. Crane, an historian of criticism, has done a study in which he classifies writings according to problems undertaken by the critic, common principles of art and rules, for example.[6] Apart from Reynolds, however, his method does not include music and the plastic arts. His inclusion of Reynolds can probably be attributed to that artits's use of a literary tradition in criticism, as distinguished

from a more visually oriented work like Hogarth's. The most comprehensive study of eighteenth-century British aesthetic thought in terms of an integration of trends and an overview of the development of aesthetic and critical problems is a section of Rene Wellek's four volume work, History of Criticism.[7] Wellek traces the development of criticism as it was influenced by the emerging disciplines of aesthetics and literary historiography. All of these studies focus on specific aspects of criticism and literature, such as terms, critical problems individual critics, and in Wellek's case, on the formation of schools of criticism.

An analysis on the basis of the attitudes of the writer is structurally different from these approaches; for the purpose of inclusiveness it offers an advantage over them because the attitude of the critic, rather than his subject matter is focused upon. This type of study will provide a system of organization for methodological trends which, as we shall see, reflect world views. It will also emphasize areas of transition in critical thought and show the relationship between critical changes, methodology, and world views. Thus, we can consider much more material than traditional literary and artistic criticism as evidence of aesthetic attitudes. Aesthetic opinions are evident in a wide range of material; narratives (The Vicar of Wakefield); histories (The Decline and Fall of the Roman Empire); psychologies,

(Observations on Man); letters (Walpole's four-thousand plus); critical reviews (Monthly Review and Critical Review); and other forms (poems, physiologies). Many critical studies of the period consider these forms where they apply to particular problems (Monk, for example, considers the role of Hartley's Observations in the development of the sublime). However, if we look at the writer's attitude toward art, and hence toward the universe and his place in it, all of these sundry works can be integrated to show a coherent pattern of thought.

In his classic study of literary tradition and romantic theory, M. H. Abrams uses an orientation approach to order critical ideas and the influences upon them in nineteenth-century theory. His theory is relevant here because of its similarity to my scheme. He writes that there are four co-ordinates of art criticism; these he calls the work (the art object), the universe (that which art represents either directly or indirectly), the artist, and the viewer-audience.[8] One can discuss art only in terms of these perspectives, and all theories which attempt to be comprehensive will take each into account. Yet, each writer will show a decided orientation to only one. "A critic," he writes, "tends to derive from one of these terms his principle categories of defining, classifying, and analyzing a work

of art as well as the major criteria by which he judges its value."[9]

According to Abram's scheme, the critical theory which considers art as an imitation of the universe co-ordinate is "mimetic";[10] that which looks at art in terms of its utile quality--to instruct through delight (the audience co-ordinate)--is "pragmatic";[11] criticism which is oriented toward the artist co-ordinate, in terms of the overflow of feelings is "expressive";[12] and theory directed toward the art itself (the work co-ordinate) is "objective."[13]

There is similarity between my approach and Abrams's. (I will use the terms object to refer to art as a representation of the universe, subject to refer to the audience, and creator to refer to the artist.) The object orientation corresponds to the "mimetic" theory which Abrams uses to indicate an Aristotelian copying of nature. Object-oriented criticisms are those directed toward the art object as a representation, or copy nature in its apparent or in its ideal form. Discussions about nature itself are entered into because of its relevance as a model for art. The definitions of nature which correspond to the three submodes in this orientation do not strictly correspond to the Platonic levels discussed by Abrams in mimetic theories. According to Abrams these Platonic levels are: (1) eternal unchanging ideas, (2) the world of sense which reflects ideas, and (3) the copy of level two--art.[14] The three

major definitions of nature, as represented by sub-modes of the object orientation represent empirical nature (as it is experienced by the senses), the ideal pattern of nature, and the abstract (or composite) of empirical nature (see the outline in section two).

The subject orientation is similar to Abrams's "pragmatic theory" in the sense that it concerns criticisms which are directed toward the viewer-audience, or subject. Eighteenth-century theorists, however, were concerned with more than the pragmatic effects of teaching and delighting: they were interested in the specific operations by which art caused this effect. Thus, subject-oriented criticism is much more specifically a category which reflects a particularly eighteenth-century turn-of-mind than Abrams's general "instruction through delight."

Finally, the creator orientation is directed toward the artist, as is Abrams's "expressive theory." His emphasis is on poetry as an overflowing of the feelings of the artist; my emphasis, however, is on the original forming power which characterizes intuitive genius.

The "subjective criticism" mentioned by Abrams indicated an orientation toward the art object itself with no reference to anything outside of it--what might be called "art for art's sake." It was not an attitude of any significance in our period, and it will not be considered in the structure of this paper. Abram traces the origins

of the "objective" criticism (what I would call "art orientation") in the eighteenth century to the emerging concept of the poet as a creator. The important factor in this context is the poet's creation of a microcosm--a world apart from the world of nature as we know it. In this world of art, the poem (or other form) has no relationship to anything apart from itself. Thus, it is neither a reflection of nature, nor an insight into man's reaction to art. I have classed these elementary expressions of the art orientation as examples of other orientations because in their contexts they have references to the world of nature and to the world of man.

Let us look briefly at two examples of what might be called an emerging art-oriented attitude. Shaftesbury's artist-creator is a maker of smaller worlds; yet these worlds are a reflection of the larger universe, and they are restricted by the same laws that govern the larger universe (by implication these laws also restrict God's action). Thus, Shaftesbury was particularly critical of Shakespeare's use of supernatural creatures.[15] Johnson, on the other hand, approved of Shakespeare's use of the supernatural, because he made his characters so true to life (a reflection of man's passions) that they behave as we think they should in such imaginary situations.[16] Both Shaftesbury and Johnson, then, believe that poetry has reference to something outside of its own world-form.

The first three orientations, object, subject, and creators were of such major importance in the eighteenth century that several sub-modes can be identified within them. The major orientation, as we shall see, can be identified as critical points of view by system (the methods of criticism and analysis), mentioned in chapter one, by values, and by definitions of terms. This type of analysis of eighteenth-century critical theory is designed to show the diversity and complexity of the ideas of the period, to demonstrate the continuity of critical attitudes, and to establish some historical and philosophical order among them.

## II

Each of the three perspectives, or orientations, object, subject, and creator oriented, along with their sub-modes, is presented here in an outline form to provide the reader with the total system at a glance. A representative writer is indicated in parenthesis beside each sub-mode.

A. Object orientation:

1. Beauty is to be found directly in nature (Hogarth).
2. Beauty is to be found in an abstraction of nature (Reynolds).
3. Beauty is to be found in an ideal pattern (Pope).

B. Subject orientation:

1. Aesthetic analysis is directed to the subject who has no special aesthetic faculties (Burke).

2. Aesthetic analysis is directed to the subject who has special aesthetic faculties (Gerard).

C. Creator orientation:

1. Aesthetic attention is directed to the artist, who possesses creative ability which is shared to some extent by all men (Shaftesbury).
2. Aesthetic attention is directed to the artist, who possesses unique creative abilities (Blake).

We will look at these critics in terms of sub-modes later in this chapter.

An orientation is not always easily identified, for sometimes a critic may write from a mixture of several perspectives. At other times there simply may not be enough evidence to determine the orientation. Some clues to an author's attitude, however, may be gleaned from the organization of his materials and the elements he found important in the arts. As we shall see, the quality of beauty in art objects, or in natural objects, was important to those who wrote in the object-oriented mode. The object-oriented work usually concentrated on defining beauty in terms of principles which could be deduced from the observation of nature. The critic usually advocated adherence to a set of rules in order to imitate beauty. Thus, Hogarth analyzed the physical qualities of line, and John Dennis promised to show how to "re-establish" poetry through the application of long-accepted, but neglected rules.[17]

To the critic-aesthetician with a subject orientation the reaction of the audience (subject) was often more important than beauty. His critical vocabulary reflected this concern with an increased dependence on aesthetic modes other than beauty. His concern for the feeling of the audience was generally reflected in his use of such terms as awe, feelings of beauty and sublimity,[18] astonishment, pain, and pleasure. The subject-oriented work often opened with an investigation of human nature. The entire first volume of Kames' Elements was devoted to a study of associationalist psychology; thus, it was subject oriented. The second volume was reserved for rhetoric and style; thus, it was object oriented.

The author whose perspective was creator-oriented was interested in the process of the creation of art--what happens in the mind of the artist--and the formative power of the artist-genius. Metholological organization is not obvious in the few works in this perspective in this period. Shaftesbury's Characteristics, for example, was a mixture of essay and dialogue which considered art in several contexts; and Blake's annotations to Reynolds were totally disorganized critical comments written in the margins of his own copy of the Discourses.[19] These critics were more interested in refuting the conclusions of the other two perspectives than in devising a critical method.

## III

Historically, aesthetic systems can be divided into objective and subjective modes. Listowel uses this distinction to categorize all systems which concentrate on the thing or idea which is imitated or copied by the artist as objective. All systems which center on the reaction of the viewer and audience to the art object (or natural object), or on the process of creation by the artist are categorized as subjective.[20] According to this scheme, Plato wrote in the objective mode. In the Republic he said that there are three "couches": (1) the Ideal, or essence of couch, (2) the one made by the craftsman which is a copy of the Ideal, and (3) the one painted by the artist which is a copy of the craftsman's copy.[21] The artist's imitation is a copy thrice removed from the Truth--the Ideal and the Original. According to Plato, the artist is a copier whose role is to imitate that which is an imitation of the essence.

Aristotle's attitude was objective as well. In The Poetics[22] he indicated that the artist (or poet) is to imitate action (his system had no dualistic-other world of ideas or essence). The fact that there are actions and passions which can be directly observed and imitated by the artist, even if they are in a combined form, makes Aristotle's point of view an objective one.

Kant's aesthetic system, on the other hand, was largely subjective because his emphasis was on a special capacity of

the human mind to interpret beauty.[23] Hutcheson's aesthetic theory was also subjective because the central issue is the reaction of association of ideas in art appreciation. Blake's attitude was subjective because he was interested in the intuitive power of the artist's mind.

Listowel's method of dividing all aesthetic systems into two large modes, the objective and the subjective, is not specific enough for an organization of eighteenth-century British theory because some very important subtleties were developed during this period which seem to serve as a transition between the classicism of the past and the romanticism of the nineteenth century. A more complex orientation approach will help clarify the transitional ideas and it will emphasize the dramatic change in critical method from a focus on the general, to a focus on the particular and the individual art. At the same time it will point out the major differences within some systems which led to the dissolution of a classical attitude and the formulation of a romantic one.

With the help of Listowel's study we can see that the object orientation was the traditional perspective of aesethetic attitudes from the time of Plato and Aristotle to the beginning of the eighteenth century.[24] Through the centuries following these two Greek philosophers little change was made in the idea of the source of beauty. Its causes were attributed by one critic after another to either

a physical thing in nature, or the idea of the perfection of nature. It is this attitude which is commonly referred to as a classical interpretation. This is the point of view we see expressed by Boileau and, to some extent by Addison. Addison, however, added the effect of the mind upon the stimulus of nature to critical theory; this response process was to be elaborated upon by his later contemporaries. The associationalist psychology which was ultimately linked with the subject orientation was introduced by Locke and developed by his fellow countrymen. Even the classicists Reynolds and Johnson, as we shall see, were influenced by the trend of subject-oriented interpretations.

Gradually another type of subjective criticism captured the imagination of some British critics. The idea of the artist as a special individual and the unique creative powers of his mind were discussed early in the century by Shaftesbury. Abrams writes that this interpretation of genius was a "development toward an organic aesthetic" because it had a direct influence upon German romanticism.[25] Abrams does not call Shaftesbury's genius organic in itself on the basis of its role in his system. However, as we shall see later in chapter five, there were organic elements in his idea of "plastic creativity," for Shaftesbury saw the artist as a "Divine Maker" who models his work with a plastic forming power which is similar to God's method of creation.

Shaftesbury's influence on his British followers in the middle and late years of the century was muted, particularly because his Platonism was reinterpreted in Lockean associationalist terms (an aspect to be further developed in chapter four), and to some extent because his system was difficult to understand in depth.[26] John Brown, a critic of Shaftebury, said in this context, "the formalist is under a double Difficulty; not only to conquer his Enemy, but to find him."[27] Thus, Shaftebury's modification of the creator orientation was not further developed in England in the eighteenth century.

Edward Young's Conjectures on Original Composition, a work of the mid century, reached a wide audience, and was generally well received.[28] This subjective criticism was very similar to Shaftesbury's, but lacked a critical system. Young's idea of creative genius was similar to Shaftesbury's, in that it was a plastic forming power which worked by mysterious methods. His perspective was creator-oriented because he placed his critical emphasis on the capacities of the artist rather than on a quality of beauty in nature and a set of rules to represent it, or on the reaction of the audience to that art.

The shift from the object, to the subject, to the creator in critical analysis reflected a change in the basic temperament of the eighteenth-century attitude regarding the character of the universe and man's place in it. The object

orientation reflected a faith in the rational order of nature,[29] as well as faith in a method by which it could be learned. The classicist confidence of a world order which could be discovered a priori through the reasoning faculties, an attitude which dominated the European consciousness from the Renaissance to the beginning of the eighteenth century, eventually gave way to a new persepctive. A confidence in the predictable universe, regulated by general rules, and available to the understanding through a system of deduction was a prerequisite for an acceptance of the object-oriented aesthetic attitude. If the artist or poet was to be able to find beauty, it must exist as an universal principle, and he must be able to determine it through reason. As the universe is guided on the principle of regular laws, so the artist is guided by the application of general and regular laws. Reynolds's criticism is solidly based on this feeling; even though the artist must look at the particular in order to determine the general, it is the general to which he must look for aesthetic truth.

Newton's laws which clearly reinforced the classical attitude about an ordered and reasonable universe actually marked a turn-around in frame of reference. The Cartesian method of proof (the ductive), so well suited to the classical attitude, assumed that one must begin with the highest, therefore most general truth, and from this knowledge bring all inferior, or particular knowledge into accordance. The Newtonian method, on the other hand, placed

the burden of philosophical and scientific proof on the particular--the data of experience--rather than on the general to which the particular must conform. Reynolds, Hogarth, and Pope had indeed conformed to a Newtonian faith in regularity, but they were still captivated by the older faith in the general as a proof of the particular. Their attempts to define a Newtonian heavenly harmony in terms of rules were not a conformation of a Newtonian spirit, as Battestin attests, but of an older faith.[30]

Eighteenth-century man's attention gradually shifted from the nature of the universe to his own nature; Pope reflected the new feeling when he said, "The proper study of Mankind is Man." The change in interest from the discovery of God's rational order of the universe to man's inward motivations and passions is attributed by Bate, for one, to a new empirical perspective characteristic of eighteenth-century British thought.[31] With the new method of analysis demonstrated by Newton and Locke, man became truly the measure of all things, for his knowledge hinged on his interpretation of the particular data of the senses.[32] The theoretical foundation of the subject-oriented aesthetic attitude was an assumed similarity in all men to response to particular sense data. A similarity in physical structure served as a proof to the similarity of responses through the senses.

The creator-orientation is a reflection of the growing

importance of feeling and expression on the part of the individual. Bate stated that it is ironic that such a frame of mind should have been fostered by the "mechanistic psychology" of the seventeenth and eighteenth centuries.[33] The empirical basis of knowledge through experience forced an increasing dependence on the validity of feeling, which, as Hume had pointed out was indisputable because all that is experienced comes through the senses and is registered in terms of feelings.[34]

By no means did the object-oriented attitude disappear during the eighteenth century in British critical theory, but more and more it became a perspective to be defended against the encroachments of the subject and creator perspetives. At the first of the century the object orientation was expressed by Dennis and Pope, in the middle of the century by Hogarth, Reynolds, and Johnson. By the end of our period Reynolds was out of step with his colleagues in his subject-oriented critical interpretation. His Discourses received wide acclaim, however, and they exercised a strong influence on the practice of the plastic arts for the latter part of the century and on into the nineteenth century. Yet, innovation in the area of aesthetics was coming from a new sector, the philosophers of the associationalist school, Burke, Gerard, and Kames, among others.

By the middle of the century the dominant mode of aesthetic criticism was subject oriented. It was expressed in the early years by Addison and Hutcheson, and later by

Hume, Burke, Gerard, Kames, Smith, Alison, and many others. The creator orientation which was vaguely suggested in the first quarter of the century by Shaftesbury, was reiterated by Young in the middle years, and carried to an extreme by Blake at the close of this period. Only faint hints of this third interpretative attitude can be seen at the opening of the century, and only weak defense is made of the object orientation its last years. Thus, there was a dramatic change during the century in the way critics talked about art--from its reflection of nature, to its creation.

## IV

In addition to method, which was discussed in chapter one, there were three other important areas of a critic's system of thought which were affected by his orientation: (1) his choice of specific terms, such as beauty, nature, sublimity, originality or association of ideas, (2) his definitions of those terms, and (3) the relative importance he assigned to them in his criticism. Let us consider these three aspects.

Certain words were more important in one orientation than they were in another; other terms were given little attention in some modes of thought, or were dropped altogether. At the beginning of the century, for example, when the dominant mode of interpretation was object oriented, the idea of beauty was central. The idea associated with sublimity assumed increasing importance

during the course of the century as the subject-oriented attitude became the dominant mode of interpretation in British aesthetics. There is a demonstrable relationship between the object orientation, and the idea of beauty, and between the subject orientation and the idea of sublimity.

In the traditionally object-oriented mode of criticism, beauty was generally understood to indicate certain characteristics actually inherent in natural objects, such as harmony, regularity, unity; and the attainment of that quality in the reproduction of those objects by the artist was accepted as the application of recognized rules laid down by generations of poets and artists. Beauty, in other words, was to be stated in a formula, and works which did not generally follow that formula were not beautiful. Pope, for example, advised deviation from rule only for the purpose of adding to the complete statement of it (see section five). Yet to the English critics of the eighteenth century, this aesthetic standard could not explain the great appeal of Shakespeare who was notorious for not having followed the rules. Thus, the suggestion by Longinus which was repeated by Boileau and emphasized by Addison and Pope, that great art is sometimes found in great faults, became an influential idea in the development of the purported qualities of the sublime.[35]

Monk has shown that the idea of the sublime as a

quality separate from beauty, and often even antithetical to it, was fully developed during the eighteenth century. The sublime was discussed by Longinus around 300 A.D.,[36] and others before and after him, as a rhetorical style which could evoke certain emotions. However, the full potential of the sublime as a distinct style and quality was not realized until the eighteenth century when the term was used by British critics and aestheticians to identify objects and emotions, as well as the rhetorical style.

At the same time that the sublime was assuming aesthetic importance, attention was shifting from the object in nature and its representation in art, to the reaction of the subject to that representation and the natural object. Addison made a major contribution to this shift with his emphasis in his papers "On the Pleasures of the Imagination" which appeared in The Spectator from 21 June to 3 July 1712.[37] He wrote that the pleasures of the imagination "arise from the actual View and Survey of Outward Objects: And these, I think all proceed from the Sight of what is Great, Uncommon, or Beautiful."[38] He thus distinguished three categories of visual objects or scenes. He wrote further that the "Horror or Loathsomness" of some sights may be disgusting in themselves, yet give rise to a delight or pleasure in the "very Disgust that it gives us."[39] The great in nature would so fill the imagination that even mountains, which generally had to that time been considered a blemish, or "wen" on the

face of nature,[40] were considered by Addision to give rise to aesthetic pleasure by their impact on the imagination through the emotions.

I have pointed out that there was a relationship between the terms used by a critic and his orientation. This relationship extended to nuances of meaning of these terms. The definition of the sublime, for example, changed as attention was shifted to the emotions aroused in the subject. Other definitions also changed: nature, genius, imagination, imitation, and art varied according to the orientation of the critic. Let us look at the definition of genius in very general terms.

The object-oriented critic generally defined genius by a standard of its ability to express beauty. Beauty is the quality in nature which the artist must represent in his work. Since beauty is independent of its physical manifestation in nature, and can only be understood by the mind, it is likely that it will never be displayed in nature in the physical sense, not excluding the artist's representation of it. He can only approximate beauty as he understands it, and attempt to convey his idea to others; the genius is one who can find beauty and express it. To find beauty, and to express it two basic tools are needed, taste and mechanics. Both can be acquired by the artist because both are dependent upon reason, a universal quality. The genius, then, can be made. His development depends upon education

and training. Education consists of an observation of nature and a study of good art; training consists of the mechanics of art--grammar and versification in the case of the poet, and drawing and composition in the case of the painter.

For the typical subject-oriented writer, genius was identified with the associative powers of the mind. Beauty and sublimity are qualities which are understood in terms of pain and pleasure; the genius is one who is able to elicit certain reactions in the minds of his audience with his art. The psychological principles responsible for an associative imagination are universal in nature; the degrees of these powers may vary somewhat, depending on the balance of attention, sensitivity, and other factors in the artist and in the connoisseur. Thus, although the quality is universal, the degree of it varies. The genius, then is one with a "larger share" of these characteristics.

Genius for the creator-oriented critic implied a creative originality. Neither the powers of association, nor the patient observation of nature is adequate to explain the powers of the artist. The artist may be identified with the Creator; he may be controlled by a demoniac power; or he may have an unnamed mysterious power. His power of creativity is limited, however, by the very medium in which it must be conveyed; the power of his mind is greater than the material world, which only limits its expression.

Let us look at the implications of these three kinds of genius in terms of creative responsibility. Because the object-oriented mode centered on the thing, or idea of nature which was to be imitated, the genius must be trained to recognize those elements in nature which are considered to be beautiful. He must also be trained in a technical sense in order to be able to execute his observations in an artistic medium. The emphasis here is on the external quality of beauty which exists independent of the artist-observer. Thus, the genius makes his contribution to art by seeking out this quality and reproducing it; in this act he can add nothing to beauty from his own mind--that is, nothing truly original--for beauty exists independently of his recognition of it. This leaves the genius in a position of a technician, or copier of nature when the implications of the meaning of beauty are carried to their extreme. Hogarth probably came closer to this idea of the artist than any of his contemporaries, for he was able to specifically indicate what beauty was, and in a sense, give a set of directions for its proper imitation. Even in the imitation of the ideal, the abstract, and "la belle nature," the artist is to copy the external, for in this sense nature and beauty are external of his recognition of it; beauty exists in his imagination only to the extent that he has gone to the trouble to seek it out from the evidences he can observe. Other ideas of genius in the object-oriented perspective were modulated by partial

acceptances of a subject orientation. Pope and Reynolds are both exemplary of this situation.

When critical analysis was focused on the reaction of the subject to art, as it was in the subject orientation, the definition of artist-genius tended to center on certain processes that take place in the mind of the subject, and in the mind of the artist in the sense of a representative of all subjects. Following the lead of Locke, who postulated that associational thought processes which are the result of effects of stimuli on the senses were responsible for the variety of ideas in the human imagination, some eighteenth-century critics placed a greater theoretical responsibility on the artist for the creation of art than had been the case for the genius defined in the object-oriented mode. In this type of analysis the artist was thought to be representing the ideas he had combined by his associational processes, rather than imitating some aspect of external nature. The artist in this case may be unique in the sense that no other human is capable of contriving the very same combination of thoughts. The major difference between this attitude and the object-oriented attitude is that the pattern of nature offered to the artist in the latter mode is available to all who are properly trained to observe it, whereas in the subject-oriented mode the artist alone is privy to his own peculiar thoughts which have been caused by external stimuli.

The third mode, the creator orientation, placed even

more responsibility on the artist for the creation of art. In this system the genius was defined as a unique individual with certain powers of creation which are basically different from the capabilities of the rest of the race. When the emphasis was placed on the creator of art the definition of genius tended to take on the connotation of an aberration from the intention of nature in the sense that there was thought to be a basic difference between the genius and his fellow man. The demoniac creator genius is a definition which is too broad to cover all the critics who wrote in the creator-oriented mode, but the implication of a god-like quality lies at the core of the creator-defined genius. The three distinct attitudes about the meaning of genius will be discussed in the context of each of these perspectives in the following three chapters.

It is clear that the products of these three different kinds of genius, which are offspring of the three orientations, can be accordingly assigned different values if the implications of each point of view is followed to its logical extreme. The product of the first artist, whether it is a poem or a statue, is something that can be produced by any properly trained observer of nature. The product of the second kind of artist can be made by anyone who has similar associational processes, a chance that is likely as all men are subject to similar experiences and react to them in a predictable, or regular manner. The product of the third

artist, however, is a totally unique thing in that it can be approximated by no one, or for that matter, by the same artist in different circumstances and times. Therefore, the product of the last as compared with the first artist should be regarded as a much more valuable piece of art. This is certainly true when the attitude of Plato is compared with that of William Blake who saw the artist as a demoniac creator. Plato's opinion of that artist's role in a society was very reserved, and the idea that the product was so far removed from truth further reduced the value assigned to it. Blake considered the artist as almost a god.[41] The idea of the role of the artist in eighteenth-century society and of his products was more subtle than the extreme differences pointed out between Plato and Blake. The actual role played by the artist in society was undergoing many changes at this time.[42]

The third area which affected by critical orientation was the value assigned to various aspects of the arts. We have just mentioned values in connection with artistic products of different kinds of genius. Let us look at another example of value in each of the three orientations. Since the object-oriented attitude was based on beauty in nature, and the reflection of it in art, and since the definition of beauty was closely related to the values revealed in the genre system, the arts of the higher genres were considered more important and more pleasing than those

of the lower genres. Reynolds, for example, placed a greater value on historical painting than on landscape; the Discourses are organized upon the genre system which emphasized the value of general nature--a truth.

In a subject oriented system, value was generally placed on the capacity of art or ideas to elicit strong emotions in the viewer. Addison, for example, did not talk about the genres. Instead he talked about the pleasurable qualities of art and of nature. Burke was interested in the great emotions caused by fear as they indirectly affected the imagination through association of ideas.

For the creator-oriented Blake, artistic value was in the creative process. He wrote time and again that his art was unique, and that it was a product of his individual creative power. The feelings aroused in the viewer were not as important as the feeling aroused in the artist in the process of making art. That process itself was almost a religious expression--and a very individualistic one at that.

Each of the three areas described above which were greatly influenced by the orientation of the critic, that is, use of key terms (sublimity, beauty), definitions of terms (genius), and values within the systems was also influenced by the degree to which another orientation attracted the writer. There are many instances of mixed orientations in this period of great change of aesthetic attitudes. Reynolds, for instance, generally wrote from the object-oriented point of view, and his definitions clearly reflected

that attitude. Toward the end of his career, however, his Discourses exhibited a strong influence of the subject orientation. Consequently the nuances of his definitions and ideas became somewhat obscure because he failed to fully recognize the change in his attitude and to come to grips with the effect of that change on his aesthetic theory. The shift in Reynolds's attitude is reflected in his appraisal of the two giants Raphael and Michelangelo. The former had been traditionally praised as a superior genius who more closely followed the rules, and therefore more closely approached perfect beauty in his paintings.[43] Michelangelo, on the other hand, was regarded with qualifications, for although his work had great appeal, it did not as closely adhere to the rules.[44] Reynolds praised Raphael in his early discourses.[45] During the twenty-three year span of his addresses his attitude toward the two artists changed, because the value he placed on sublimity and beauty, among other things, changed.[46] In his last Discourse he praised Michelangelo as the greatest artist of all time.

Reynolds's Discourses (and the three Idler papers) offer an insight into the impact of the two new attitudes upon a classical interpretation. Reynolds absorbed new critical ideas and carefully adjusted his object-oriented theory to accommodate them. Let us now look at these three critical perspectives, and particularly at their sub-modes, as they were expressed by various critics.

V

The object-oriented perspective was concerned with the source of beauty which could be found in one of three ways depending on the modification of the attitude: (1) it may be in a physical object which appears in nature and can be pointed out by the artist as that which is beautiful in itself, as Hogarth's "S" curve, (2) it can be found in an abstract of all the forms of nature, as Reynolds's "central form," or (3) it may be only an idea, which, though never presenting itself in visible nature, serves as a pattern to be imitated by the artist. We shall see that Pope's Essay on Criticism offers an example of this last modification. A fourth modification of the object orientation was suggested by Addison. He wrote in The Spectator that art pleases more the closer it approaches nature. This would suggest a direct, photographic imitation, an idea which was rejected as "mere Dutch realism" by his contemporaries.[47]

Hogarth is unique among British critics for his promise to "shew what the principles are in nature, by which we are directed to call the form of some bodies beautiful, some ugly."[48] Hogarth revealed to the reader that this principle is a line like an "S" curve, and that things which closely conform to it are beautiful; things that do not conform to it are ugly. The "line of beauty" pleases because of something in its own nature which is independent of the viewer; the principle does not call upon the viewer to recognize it. Although man is so constructed that he

naturally recognizes beauty, the critical emphasis is on the quality in the object rather than on a principle which causes man's recognition of it.

Since beauty is a property of certain lines, Hogarth promised to show that things are more or less beautiful depending on how closely they conform to the line of beauty. He found four classes of objects ranging from those composed of straight lines to those composed of serpentine lines.

> First, object composed of straight lines, only, as the cube, or of circular lines, as the sphere, or of both toether, as of cylinders and cones, etc.
>
> Secondly, those composed of lines partly straight, and partly circular, as the capitals or columns, and vases, etc.
>
> Thirdly, those composed of all of the former together with the addition of the waving line, which is a line more productive of beauty than any of the former, as in flowers and other forms of the ornamental kind; for which reason we shall call it the line of beauty.
>
> Fourthly, those composed of all the former together with the serpentine line, as the human form, which line hath the power of super adding grace to beauty. Note, forms of grace hath the least of the straight line in them.[49]

Furthermore, beauty is not only found in those figures composed of the line of beauty, it is totally lacking in those figures composed of straight and angular lines.

> We may not only lineally account for the ugliness of the toad, the hog, the bear and the spider, but also for the different degrees of beauty belonging to these objects that possess it.[50]

Hogarth said nothing about the feeling which possess his audience by the mere mention, not just the

representation, of these objects. Response, association of ideas leading to fear, love, and ambivalence had no part in his analysis. Nor did Hogarth indicate that one spider may be more perfect, uglier (or more beautiful), than another. For him there was no standard for spiders as a class apart from the lines used to represent them. In other words, he did not recognize a generic beauty.

To assure that the reader fully understands that beauty is a property of line, Hogarth accompanied his essay with a set of illustrations in two plates to which he repeatedly referred. These consist of a series of line drawings of various things to demonstrate that beauty is to be found by degrees in progressive stages from the straight line to the line which turns on itself--the serpentine line. (Hogarth's first plate is reproduced here as plate 2.) Thus, his point of view centered on the object in nature with the added specification that individual things actually exist in physical nature which can be lineally represented by the method he outlines.

Reynolds's object orientation is substantially different from Hogarth's. Unlike Hogarth, he did not find beauty to exist in any one form in nature. Beauty, wrote Reynolds, is to be found in an abstraction, the "central form," which is arrived at by the artist through the reasoning powers in a direct observation of nature's variety of particular specimens. Each class of objects has its own central

form, or perfect example, which is only an imaginary potential. No one thing in any class, such as humans (and spiders), can be found in nature in its perfect form, though many individuals can be found to possess some of the qualities of beauty. If the artist can sum up all of the characteristics of a particular form-class of things and convey them in an artistic medium, he has found beauty. The composite idea which exists in the artist's imagination is the ideal form. It is not a Platonic ideal because the particular elements are directly observable by the artist who brings them together to form a new figure. Beauty, as for Hogarth, is out there in the physical world.

> This great ideal perfection and beauty are not to be sought for in the heavens, but upon the earth.[51]

Reynolds's main concern was for the application of theory to the specific problems of portraiture--a representation of the particular. Thus, his ideal, which would seem to suggest the most perfect form, seems to mean an average form when it is applied to the practical problems of painting individuals

Individual examples presented to the artist by particular forms, that is, nature, are to be studied for the most characteristic features of their class, and a composite of these, the central form, must be used to express the idea of that specific class of beauty. The central form is beauty, and as Hogarth's deviation from the line of beauty results in the ugly, failure to find the perfect form

results in deformity.

> Thus it is from a reiterated experience, and a close comparison of the objects in nature, that an artist becomes possessed of the idea of that central form, if I may so express it, from which every deviation is a deformity.[52]

Several beauties exist, each of which is fit for a specific class of things and ideas. For examples, the form of Hercules is a central form for a certain class of humans, Apollo and Gladiator for others. Yet, the central form for the total class of humans would consist of elements of all of these and other examples as well.

> And there is one general from, which . . . belongs to the human kind at large, so in each of these classes [Hercules, Apollo, the Gladiator] there is one common idea and central form, which is the abstract of the various individual forms belonging to that class. Thus, though the forms of childhood and age differe exceedingly, there is a common form in childhood, and a common form in age, which is the more perfect, as it is more remote from all peculiarities.[53]

To use Reynolds's formula in a hypothetical situation, if one were to depict a blind man, he would study all of the examplesof the class of blind men to arrive at the central form for that class. But this blind man, though a central form for his class, would be a deviation from the representative human form, for most men are not blind and do not have the posture and expression of blind men. Of deviations Reynolds writes:

> There is likewise, a kind of symmetry, or proportion, which may properly be said to belong to deformity. A figure lean or corpulant, tall or short, though deviating from beauty, may still have a union of the various parts, which may contribute to make them on the whole not pleasing.[54]

The reason that the artist must resort to deviations from the central form of humankind is related to the purposes of art and the means the artist uses to express his ideas--in Reynolds's case it is the demands of the portrait genre which necessitates the representation of pecularities, and hence, deformities.

Reynolds indicated that while it is nature that is to be imitated by the artist, it is not nature as it presents herself to the eye, but nature "corrected by herself."

> I will now add that nature herself is not to be too closely copied . . . he [the artist] corrects nature by herself.[55]

Although Reynolds spoke in terms of form, his idea extended implicitly to the realm of situations because of his dependence on the hierarchy of genres. Thus, beauty exists not only in the proper representation of form, such as that of Hercules or a tree. It also exists in a <u>decorous</u> representation of these forms: the context must be fitting. In other words, propriety is the rule in the historical and mythological themes of Raphael and Michelangelo as well as in the still lifes of Chardin.

Reynolds upheld the models of the ancients, as did Hogarth and Pope, but for reasons different from theirs. Hogarth believed that the ancients had recognized the principle of the "S" curve, and thus merited imitation. Pope, as we shall see, advised the artist (poet) to imitate the ancients because they had copied the patterns of beauty.

Reynolds, however, indicated that the ancients had discovered the central form; they had not perfected their discovery, however, thus leaving room for further improvement in the arts.

There are several major differences between Reynolds and Hogarth. Reynolds wrote of an abstraction of visual experience which is the central form; Hogarth pointed to an actual material realization of the principle of the "S" curve. Deviations from the central form constitute Reynolds's implicit theory of the ugly, while Hogarth stated explicitly that ugliness is inherent in straight and angular lines. Reynolds recognized a generic beauty represented by the generic type which has its own central form, giving the artist several abstrac ns of nature for the various forms he must represent. Hogarth could find only one beauty, the curved line; for him there was no special kind of beauty for various classes of forms, thus beauty is evaluated solely on the basis of lines needed to represent objects.

Reynolds and Hogarth were both clearly writing about a beauty which is directly observed by the artist who is trained to know what to look for. Since both of these critics were writing about the plastic arts their interpretations can be expected to be a little more visually oriented than Pope's; indeed, one might expect all painter's theories to be visually oriented because of the demands of the medium. However, these two artists' object-oriented

attitudes are much closer to Pope's than to that of another painter later in the century, Blake, whose attitude was creator oriented.

Pope is somewhat representative of the "pattern" type of object orientation indicated in the outline above, for while his theory had some of the characteristics of this sub-mode, his aesthetic attitude show some features of other modifications as well. Let us first look at the use of pattern in criticism, then at Pope's particular adaptation of it.

The French classicists' strict admonitions to follow the pattern of the ideal tragedy with its unities of time, place, and action, the form of the epic, and the classes of painting established by Le Brun are excellent examples of this third modification of the object orientation. While these forms are not to be seen in the actions of men as they actually occur, the patterns are representative of perfect possibilities which are to be represented by art. Nowhere does one observe man at the height of passion speaking in perfect heroic couplets, but because this form has been established as the perfect pattern for heroic drama, it exists as a law of art and governs it much as the behavior of physical bodies are governed by the laws of nature. The poet is to follow this law in his representations.

There is a close relationship between the pattern used by the poet andthe theory of harmony which many eighteenth-century writers thought was a reflection of the harmony of the

universe.[56] Borghese wrote, for example, that the musical instruments are tuned to the natural harmonic sounds, for "nature wants no correction of her principles."[57] The octaves and the ratios of harmony are natural because they exist as musical laws.[58] The harmonic system exists as a pattern which is followed by composers and musicians whose instruments' specifications meet their technical needs. The materials needed to bring the pattern into physical representation are the musician's tools--chords--and the poet's tools--words. As is typical of the object orientation, the existence of the law is totally independent of an audience, and of an artist. In other words, the law of harmony exists in spite of man's recognition of it. Although man is so constructed that he recognizes harmony (beauty), he needs his taste refined by the study of good examples of art and an understanding that it is good because of its conformity to the rules. Although no English critic after Thomas Rymer in the late seventeenth century was so strict as the French classicists with regard to this pattern, Pope and Dennis both express a freer version of this feeling in their critical writings. Pope's attitude was quite liberal in the sense that the artist has a greater license to go beyond the rules; yet, he may do so only to establish new ones. Pope's version of the ideal pattern is somewhat clouded by the introduction of other ideas; he said in his Preface to Shakespeare that nature speaks through the

poet,[59] yet we know that this dictation is not like Blake's, but merely a pattern of underlying form coming out through the medium of the poet. The Preface of the Iliad and An Essay on Criticism both provide evidence of Pope's belief in a poetic pattern of expression which reveals nature's pattern and harmony.

Pope wrote in the Preface of the Iliad that Homer had invented the form of the fable, of which there are three types, probable, allegorical, and marvelous. The Iliad , he wrote, makes use of all these possibilities. One of the most striking things about this critique is Pope's consistent use of the word invention with reference to Homer's genius. His reiteration of "invention," which seems to have several meanings, directs one's attention away from an important paragraph which quietly restates the demands of the poetic fable so insisted upon by the French classicists--the unities of action, time, and place. Pope wrote:

> [The main story] of the Iliad is the Anger of Achilles, the most short and single Subject that ever was chosen by any poet. Yet this he has supplied with a Vaster Variety of Incidents and Events, and crowded with a greater Number of Councils, Speeches, Battles, and Episodes of all kinds, than are to be found in even those Poems whose Schemes are of the utmost Latitude and Irregularity. The Action is hurried on with the most vhement Spirit, and its whole Duration employs not so much as fifty days. Virgil, for want of so warm a Genius, aided himself by taking in a more extensive Subject, as well as a greater Length of Time, and contracting the Design of both Homer's Poems into one, which is yet but a fourth part as large as his. The other Epic Poets have us'd the

poet,[59] yet we know that this dictation is not like Blake's, but merely a pattern of underlying form coming out through the medium of the poet. The Preface of the Iliad and An Essay on Criticism both provide evidence of Pope's belief in a poetic pattern of expression which reveals nature's pattern and harmony.

Pope wrote in the Preface of the Iliad that Homer had invented the form of the fable, of which there are three types, probable, allegorical, and marvelous. The Iliad , he wrote, makes use of all these possibilities. One of the most striking things about this critique is Pope's consistent use of the word invention with reference to Homer's genius. His reiteration of "invention," which seems to have several meanings, directs one's attention away from an important paragraph which quietly restates the demands of the poetic fable so insisted upon by the French classicists--the unities of action, time, and place. Pope wrote:

> [The main story] of the Iliad is the Anger of Achilles, the most short and single Subject that ever was chosen by any poet. Yet this he has supplied with a Vaster Variety of Incidents and Events, and crowded with a greater Number of Councils, Speeches, Battles, and Episodes of all kinds, than are to be found in even those Poems whose Schemes are of the utmost Latitude and Irregularity. The Action is hurried on with the most vhement Spirit, and its whole Duration employs not so much as fifty days. Virgil, for want of so warm a Genius, aided himself by taking in a more extensive Subject, as well as a greater Length of Time, and contracting the Design of both Homer's Poems into one, which is yet but a fourth part as large as his. The other Epic Poets have us'd the

> same Practice, but generally carry'd it so far as to superinduce a Multiplicity of Fables, destroy the Unity of Action, and lose their Readers in an unreasonable Length of Time.[60]

Homer's fable revolves around the anger of Achilles, each episode stemming from this one source. The simplicity of Homer's achievement is the main reason the Greek poet excels over Virgil. Homer's invention, as it turns out, is carried out within these bounds.

Now, as for invention, it is so loosely defined as to be a catch-all term for artistic productivity. We must be careful not to read "romanticism" into Pope's enthusiasm for poetic invention. His use of the word does not mislead the reader about the main character of the Preface--an examination of the elements of the poem in terms of established criteria, and a justification for deviations from them. Thus, Pope discusses the unities first, and then allegory, machinery, character, speeches, description, images, similies, versification, all within the context of invention.[61] Among the many meanings of invention are variety, which means good, and overdone, or wild, which means bad. Invention also takes in imagination, a term which in Pope's time carried the meaning connotation of "imagry," not demoniac creation.[62] (We will consider Pope's use of invention in the next chapter.)

Pope's Essay on Criticism also displays some features of this third modification of the object orientation. He

advised the poet to follow nature.

> First follow NATURE, and your Judgment frame
> By her Just Standard, which is still the same:
> Unerring Nature, still divinely bright,
> One clear, unchang'd and Universal Light,
> Life, Force, and Beauty, must to all impart,
> At once the Source, the End, and Test of Art.[71]

When we read further to see what is meant by "nature"[64] it becomes increasing clear that nature is reflected by a set of rules which aid the artist in his representation of her. The rules are nature still; the rules in this respect indicate the pattern, the ideal of nature, and the poet is admonished to follow them closely:

> Those RULES of old discover'd, not devis'd,
> Are Nature still, but Nature Methodiz'd;
> Nature, like Liberty, is but restrain'd
> By the same Laws which first herself ordain'd.[65]

We note that the laws are discovered by the poet, and not made up, or invented, in a more modern sense of the word.

Pope used the word nature to mean a multitude of things; he continually changed the implicit and explicit definition throughout the Essay on Criticism, and the Essay on Man. In the passage just quoted, however, he clearly equated nature with the rules established by the ancients. Thus, nature can be represented by a pattern, the ideal expression, and that pattern is what the poet is to imitate. He surely must not imitate the specific works of the ancients: Pope was highly critical of such attempts to follow Homer in the Preface of the Iliad.[66] His reluctance to advocate an extremely strict application of the rules, as did the

French classicists, can probably be attributed to his admiration of those English poets who were either not aware of the conventions or who chose to ignore them if they were. The example of Shakespeare was always before critics who tried to apply a system of rules.

The rules to which Pope refers again and again (lines 135ff, 161-162) in this essay tell the poet that though there are sanctioned methods, these are not totally unalterable--there is some room for improvement by the modern poets who may enlarge the number of rules (or negate others) by making improvements on those already practiced.

> If, where the Rules, not far enough extend,
> (Since Rules were made but to promote their End)
> Some LUCKY LICENSE answer to the full
> The Intent propos'd the License is a Rule.[67]

Thus, in this essay he demonstrated his reluctance to give the poet over completely to the rules; the poet's license extends beyond the rules in order to make new ones for others to follow in due course. The license to make new rules is extended with utmost caution as it is equated with breaking some of those in operation, and furthermore, must be sanctioned by some example of the ancients--it must have "their Precedent to plead."

> (He) May boldly deviate from the common Track:
> From Vulgar Bonds with brave Disorder part.
> and snatch a Grace beyond the reach of Art.
> But tho the Ancients thus their Rules invade,
> (As Kings dispense with Laws themselves have made)
> Let it be seldom, and compell'd by Need,
> And have, at least, their Precedent to plead.[68]

Pope's ministrations to the poet consist of an admonition to follow the pattern discovered by the ancients, for these rules are the physical expression of beauty. In most cases, to deviate from the pattern is to deviate from nature. When the poet choses to deviate from rule, it should be a rational decision, a process by which he makes a new rule, and under the advisement of the ancients. By imitation of the ancients Pope certainly did not intend for the poet to write the Iliad and the Aenid over and over again (ironically he had done this in a sense by translating the classics), but he intended the poet to study the example of nature methodiz'd and to follow that example.

When we turn to Pope's text to see where the ancients learned the rules, we see that it was not from the study of nature as was the case for Reynolds, but it was from the heavens that the first poets received their inspiration, their insight into the rule of nature:

> Hear how learned Greece her useful Rules indites,
> When to repress, and when to indulge our Flights:
> High on Parnassus' Top her Sons she show'd,
> And pointed out those arduous Paths they trod,
> Held from afar, aloft, th' Immortal Prize,
> And urg'd the rest by equal Steps to rise;
> Just Precepts thus from great Examples giv'n;
> She drew from them what they deriv'd from Heav'n,[69]

Pope's reference to flights of inspiration, I think, is an allegory for a rational creative process. He justified the use of rhetorical devices in the Iliad. He wrote, in justification of Homer's allegories, that they may be founded on truth.[70] In the Preface he said,

> How fertile will that Imagination appear, which was able to cloath all the Properties of Elements, the Qualifications of the Mind, the Virtues and Vices, in Forms and Persons; and to introduce them into Actions agreeable to the Nature of the Things they shadow'd?[71]

Pope's idea of beauty is very similar to that of Reynolds, but there is a marked difference in that beauty, for Pope does not appear even in the particularities of nature; it remains only as an ideal potential, a pattern which must be discovered by the poet. Homer's invention revealed a part of that nature sought by the poet. The difference between Reynolds and Pope can be attributed, in part, to the media which each had in mind--the form demanded by pictorial representation, and the ideas and words of poetry. But the distinction goes further than a visual beauty and nature methodiz'd because Pope could rely on a critical tradition for the specific patterns of the various genres, such as tragedy, epic, and ode. While there was a tradition of genres in art criticism, there was no strictly established pattern for the distribution of the action other than examples of earlier artists. In their critical theories, Reynolds thought more like a poet and musician, and Hogarth more like a painter. Reynolds, like Pope, fitted the genre theory neatly into his system, while Hogarth placed more emphasis on the particular configurations of things.

As we have seen, the writings of Hogarth, Reynolds, and Pope give us examples of an object-oriented perspective and have some subtle and some not so subtle differences

between them. While Reynolds was influenced by another orientation, and Pope by another modification of the object-oriented attitude, Hogarth presents an example of what might be referred to as a pure orientation because beauty lies in the physical "S" curve. His Analysis is a relatively simple system because of its structural dependence upon the foundation of beauty in a demonstrable physical principle. Because Reynolds was so successful in incorporating concepts not completely compatible with the object orientation, his Discourses are more complicated and sophisticated then Hogarth's Analysis. It has been said by several historians that Reynolds summed up all of the dominant themes of art criticism to his time.[72] He did so by carefully accommodating various trends of thought to his essays as a whole. Pope did not sum up his critical ideas in a form similar to Reynolds' Discourses, or Hogarth's Analysis. Other than the very early poem An Essay on Criticism his criticism was not structured into a system; he made many additional critical statements after this poem which show several trends of influences. In the consideration of his attitude, therefore I will focus on the ideas which illustrate a modification of the idea of literary patterns.

## VI

The subject-oriented perspective had two modifications in the eighteenth century. The emphasis in both of

these was on the emotional response of the subject to experience, ideas, and objects; therefore, the quality of importance is not beauty in external objects but, rather, the feeling of beauty and other aesthetic modes. This feeling is often referred to as a sublime emotion, or a response to a sublime idea of vista. The differences between the two modes is a difference of opinion as to the nature of the senses; one accepts only the five external senses, while the other proposes a set of special senses which augment the physical ones. Burke, for example, based his aesthetic theory directly on the primary pleasures of the senses; for him there was no internal sense of beauty and no special aesthetic faculty to receive and interpret the ideas of the sublime and beautiful. The pleasures of the imagination are secondary in the sense that they are dependent upon a physical experience (the primary) of the physical world. The reaction of the subject occurs in the form of ideas which are caused by the external world; the associations which occur between ideas are imagination. Francis Hutcheson, on the other hand, recognized an internal aesthetic faculty which was a common attribute in all men. He asserted that there were several internal senses, independent of the external ones, which are aware of the causes; one is aware of absolute beauty through the aesthetic faculty of the sense of beauty. All other ideas of beauty (relative) arise from associations of ideas. These

two systems will be explained in chapter four.

Burke closely followed Addison in his reliance upon only the physical senses for aesthetic experience. The object for Addison and for Burke still retained an inherent ability to stimulate a response based on its particular configuration. Yet, although the mind reacts to these stimuli in a specific manner which depends upon their form, the principle of association of ideas allows for variation in response from subject to subject.

Burke wrote that all human passions (particularly sublimity and beauty) can be traced to two basic emotions, fear and love. The configuration of an object will affect series of associations in the mind of the viewer and cause a feeling of either sublimity or beauty. Furthermore, all men will react in like manner to like stimuli.

> It must be necessarily allowed that the pleasures and pains which every object excites in one man, it must raise in all mankind, whilst it operates naturally, simply, and by its proper power only; for it we are to deny this, we must imagine that the causes operating in the same manner, and on subjects of the same kind, will produce different effects, which would be highly absurd.[73]

Burke also found that all the knowledge we have about external things comes through the external senses, the imagination, and the judgment; and as the imagination and judgment are dependent upon the senses for their conclusions, they are, like the senses, the same in all men.

> For since the imagination is only the representation of the senses, it can only be pleased or displeased with the images, from the same principle on which the sense is pleased or displeased with

> the realities; and consequently there must be just as close an agreement in the imagination as in the senses of men.[74]

Differences in taste (the reaction of the senses to objects) from one individual to another are attributed to either a personal variation in the association of ideas connected with the stimuli, or to the differences in degree or mode of attention of the senses.

> So far then as the taste belongs to the imagination, its principle is the same in all men; there is no difference in the manner of their being affected, nor in the cause of the affection, but in the degree there is a difference; which arises from two different causes principally; either from a greater degree of natural sensibility, or from a closer and longer attention to the object.[75]

> When it is said, taste cannot be disputed, it can only mean, that no one can strictly answer what pleasure or pain some particular man may find from the taste of some particular thing [said with reference to the palate].[76]

The principle of sense is universal in that it acts in the very same way in all men; it thus forms a foundation for a standard of taste. Any deviation from the standard is attributable to the reasons given above as well as to personal relishes and habits like an acquired taste for coffee or vinegar.

True to Lockean psychology Burke traced the responses of the sense data to the response to either pain or pleasure. He wrote that the natural tendency is to like certain objects or ideas and to dislike others. Forms which are small and smooth, for example, usually elicit feelings of pleasure, and thus are considered to be

beautiful. Objects which are large and rough elicit displeasure, or pain, and are thus likely to rouse feelings of fear (awe), which can cause a vicarious pleasure in artistic representation and in remoteness; this feeling is the sublime.

According to Burke anyone may acquire a taste for the bizzare or the unpleasant, coffee, for example; he may also acquire a taste for bad art. Taste may vary, but responses are generally similar. Thus, a standard for good art, which is founded on similarities in responses, remains even though there is no one in a society who can recognize it. The recognition of good art, taste, is based on experience with objects which cause a physical response of either pain or pleasure. If one has had no contact with good art, in a primitive situation, for example, he may be aesthetically pleased with a representation of a human form which is as rough as a barber pole.[77] The same senses that give information about physical objects are those which are responsible for the formulation of aesthetic opinions; thus, opinions about beauty and sublimity are affected by all general information.

One might maintain that Burke's analysis is object-oriented because he has a standard of beauty based on the object and its special features which are absolute and independent of the subject. However, in order for beauty to be theoretically complete it must be experienced

by someone; and the manner in which it is perceived is central to Burke's aesthetic. Certain objects by their configuration, naturally cause pleasure, and thus elicit an experience of the beautiful; other objects cause pain by the same principle. Pain experienced by the imagination is capable of eliciting a feeling of the sublime. The sublime idea, because of its remote connection with pain, is experienced vicariously in the imagination and gives a greater ultimate pleasure than beauty, which offers no threat. Burke's value judgment ranks the quality and feeling of the sublime over beauty.

Burke's theory of aesthetic judgment is based on the universality of the function of the five external senses. Francis Hutcheson relied on a set of special senses to augment the physical ones. In a sense he identified more than one aesthetic mode, as did Burke who distinguished between sublimity and beauty. Hutcheson's modes, however, are actually modifications of beauty; and for the reception of these modifications he provided special senses. There are two major modifications of beauty: absolute beauty is a fixed truth; relative beauty is an idea which arises from associations of ideas caused by all the senses, external and internal. Sight understands relative beauty. The internal senses of beauty, morality, and harmony, among others, perceive absolute beauty.

> Let is be observed that in the following papers the word <u>beauty</u> is taken for <u>the idea raised in us</u>, and

> a sense of beauty for our power of receiving this idea.
>
> It is of no consequence whether we call these ideas of beauty and harmony perceptions of the external senses of seeing and hearing, or not. I should choose rather to call our power of perceiving these ideas an internal sense, were it only for the convenience of distinguishing them from other sensations of seeing and hearing which men may have without perception of beauty and harmony.[78]

Hutcheson justified distinguishing between the ordinary and the internal senses on several grounds. His major argument was that we call the powers of receiving different perceptions different senses.

> When two perceptions are entirely different from each other, or agree in nothing but the general idea of sensation, we call the powers of receiving these different perceptions different senses.[79]

This is an observation about the general understanding of the meaning of sense, but the logic is later extended to include the sense of beauty, morality, harmony, and more. He gives other justifications for setting these sensations apart: (1) sensations of beauty must be distinguished from sensations of sight and hearing which are essentially different,[80] (2) brute animals can see and hear, yet we cannot assume they know beauty and harmony through these external senses,[81] (3) the beauty of theorems, universal truths, and extended principles of action are understood without the aid of the external senses,[82] and (4) ideas (impressions) of beauty and harmony can be understood without knowledge of their underlying principles, just as the

sensations of color and sound can be understood without knowledge of their underlying principles.[83]

The theory is further clarified by a distinction between the perception by the internal sense of beauty--it perceives absolute beauty--and the external sense of sight which is aware of relative beauty. The difference lies, in part, in the principle of association of ideas. Absolute beauty is not relative, and needs no comparison of ideas; relative beauty is dependent upon such a comparison.

> Beauty [in corporal forms] is either original or comparative; or, if any like the terms better, absolute or relative. We therefore by absolute beauty understand only that beauty which we perceive in objects without comparison to anything external; comparative or relative beauty is that which we perceive in objects commonly considered as imitations or resemblances of something else.[84]

Absolute beauty is the quality which excites the idea of uniformity amist variety. We can illustrate the principle of variety with the comparison of a triangle and a hexagon: the latter figure has more variety, therefore it is more beautiful. The principle of uniformity can be demonstrated by a comparison of an equilateral triangle with a scalenum: the former figure has more uniformity, therefore it is more beautiful.[85]

Relative beauty consists of compared and contrasted ideas. Several factors make up these principles: imitation, in which a copy is compared with an original;[86] probability, which is necessary for an understanding of resemblance in similitudes, metaphors and allegories.[87] Relative beauty

is the subject of the arts.

Relative beauty is further compounded by the moral sense. Moral ideas are understood through the internal moral sense, and these impressions are compounded by association with all other ideas of all the other internal and external senses. These complex associations form the idea of relative beauty. It is relative beauty which concerns art. Thus, moral subjects excite the senses and elicit associative responses.[88] (See chapter four for a diagram of Hutcheson's complex operations of the external and internal senses.)

The basic difference between Burke and Hutcheson lies in the sources of ideas of beauty as well as the means, or senses, which receive the impressions. Burke devoted many pages to the analysis of objects which naturally excite certain emotions; the principle of this response is association of ideas. For Hutcheson, beauty lies in a principle of variety amidst uniformity, and is perceived by an internal sense of beauty. Our ideas of relative beauty are caused by the actions of the internal senses and the external senses together. Burke indeed mentioned the principle of variety, but for him it was understood in Hogarth-like terms; it pertains to the particular directions of lines and to parts of things. For Hutcheson, variety is linked with uniformity, and acts as a single principle rather than as a principle of parts. We can

illustrate the difference between Hutcheson and Burke on the matter of variety with flowers. Hutcheson looked at them as a whole class: they display variety amidst uniformity.[89] Burke saw flowers in terms of the variety of forms and lines in each individual specimen.[90] Thus, Hutcheson need an internal sense to understand the unformity factor in beauty; Burke needed only the external senses to understand external beauty.

Like the subject orientation, the creator orientation concentrated on an emotional sensation, with the basic difference that the focus was on the one who makes art rather than on the one who appreciates it. There were two modifications of the creator-oriented perspective in the eighteenth century. One saw the artist as a possessor of a greater quantity of characteristics held in some degree by all men. The other attitude held that the artist possesses a special sense of creativity which can not be found to any degree in other men. As we shall see, Shaftesbury maintained that the principle--the sensitivity necessary for artistic production--is present to some degree in all mankind. Blake claimed that creativity is unique to the artist.

The question of the native ability of the artist was posed early in the century by Addison who distinguished between the natural and the trained genius.[91] This distinction was further developed during the century by other

British writers. The difference was of central importance to the issues of creativity and the training of the artist. The implication of learned genius is that creativity can be taught; therefore, there is a validity in schools such as the Royal Academy. The implication of natural genius is that creativity cannot be taught, though the mechanical skills may be sharpened. The extreme of the later view is that artistic productivity is entirely spontaneous. According to one historian, the extreme statement was not made until 1782 when John Pinkerton wrote in his Letters on Literature that invention knows no rules.[92] This was Blake's belief. Thus, the difference between the two modes of this attitude centers on the nature of creativity; the implications of the differences amount to a belief in either a rationally learned art, or a demonically inspired art.

Shaftesbury saw the artist as a "second maker." For Shaftesbury beauty and truth are synomous terms; beauty and truth are the recognition of the harmony of the universe. This attitude has some characteristics of both the object orientation and the subject orientation because of a recognition of an absolute harmony, and a response to it. In understanding the order of things, however, the artist-creator partakes in the original creation on a minor scale--he is the creator of smaller worlds. Shaftesbury wrote that

> A poet is indeed a second marker; a just Prometheus under Jove. Like thet Soverign artist of universal plastic nature, he forms a whole, coherent and proportional in itself, with due subjection and subordinancy of constituant parts.[93]

His critical focus is on the artist.

In the theory of this moralist beauty assumes an identity with the good and the right in a balanced and moral universe. The good that the artist recreates is an inherent principle of the universe as a whole; it is a characteristic of nature.

> Virtue has the same fixed standard [as musical harmony]. The same numbers, harmony and proportion will have place in morals, and are discoverable in the characters and affections in mankind; in which are laid the just foundations of art and science superior to every other human practice and comprehension.[94]

Not only is beauty discoverable in every part of the universe, but the sense that is aware of it is common to all men; the ability to express that beauty is a talent that comes to one through rational means, that is, the study of the ancients.

> . . . to deny the common and natural sense of the sublime and beautiful in things will appear as an affection, merely, to anyone who considers duly on the affair.

and

> . . . thus much for antiquity and those rules of art . . . by which the adventurous geniuses of the times were wont to steer their sources and govern their impetuous muse. Those were the chartae of our Roman masterpoet [Virgil], and these are the pieces of art, the mirrors, the exemplars he bids us place before our eyes.[95]

Thus, Shaftesbury believed that genius can be improved by observation.

Shaftesbury's aesthetic ideas were very eclectic and must be gleaned from several essays in the Characteristics,

Second Characters, and some collections of letters. It is clear, though, that the beauty for Shaftesbury appears not in the external world, but in the world of the artist's mind. That creative power is aware of the creative and changing possibilities of nature. The notions thus formed in the artist's mind are objects in themselves.

> In a creature capable of forming general notions of things not only the outward beings which offer themselves to the senses are the objects of the affections, but the very actions themselves, and the affections of pity, kindness, gratitude, and their contraries, being brought into the mind by reflection, become objects.[96]

These objects, of course, are not material. Yet, they are acted upon by the mind in the same manner as are the objects presented to the external senses; thus beauty exists as an idea-object in the mind of that man who aspirations may well be to represent it in an artistic medium.

> The case is the same in the mental of moral subjects as in the primary bodies of common objects of the sense. The shapes, motions, colors, and proportions of the latter being presented to our eye there necessarily results in a beauty or deformity.[97]

The artist in Shaftesbury's analysis is not a super-human; he is merely a man who has cultivated a natural capacity to some extent common to all men. Blake, on the other hand, saw the artist as an uniquely gifted individual who receives a special message from the "muses" or from God and conveys his artistic idea almost as a madman who has little control over the content of his work. For Blake the act of artistic creation is almost a religion. The mind of

the artist-creator assumes a very powerful role of creativity for this poet, artist, and critic. The creative vehicle, the genius, is the ultimate and only source of art. Not only is he born a natural genius, "man brings all that he has or can have into the world with him,"[98] but he cannot develop his powers by any amount of observation or training. This was the basis for Blake's stinging criticism of Reynolds whose interest was in the Royal Academy, and whose conviction was that the artist must learn by experience. Blake did not need experience, he needed only imagination.

> Men think they can Copy Nature as Correctly as I copy Imagination; this they will find impossible, and all the Copiers or pretended Copiers of Nature from Rembrandt to Reynolds, prove that Nature becomes to its victim nothing but Blots and Blurs.[99]

The expression of what is known by the artist is beauty; the passion felt by the artist is beauty.

The difference between Shaftesbury's genius and Blake's genius amounts to a difference in its creative methods. Shaftesbury's genius needs insight and example; Blake's genius needs only inspiration. Indeed, Blake felt that creative process is stiffled by example and rule.

Blake's statements about beauty were written for the most part in the nineteenth century, but as he was a product, and indeed almost a culmination of the eighteenth, his thoughts are not out of place here His view of beauty and the part played by the artist is an ultimate expression of an idea expressed in the mid-eighteenth century by

Edward Young. In his Essay on Original Composition Young wrote that the artist creates in an unique manner, not by any means visible to the critic, and that his creation is an act in the organic sense which produces something new in the world.[100]

The gradual shift in aesthetic attitudes during the course of the century in British thought from a predominantly object- to a subject- to a creator-oriented perspective is reflected in the titles of many essays and other works. Topics such as the analysis of beauty in poetry and art were fashionable in the early part of the century. Starting with Addison's "Pleasures of the Imagination" which incorporated Lockean associationalism, essays on taste increased in frequency. Burke's original statement about beauty was the Inquiry. That Burke wrote in the object-oriented mode might have been a justifiable position had he not found it necessary to clarify his intent with the subject-oriented preliminary discourse Essay on Taste which was published with the third edition of the Inquiry in 1761. As the conception of the artist as originator and keeper of beauty became a matter of interest after Young's examination of the idea of creativity and enthusiasm, other essays reflected this new concern for creative genius. Both the idea of response of the viewer and the creativity of the artist as beginning points for aesthetic inquiry lie as potentials in the essay of Addison at the opening of the century. Both possibilities were developed by his British contemporaries in the following years.

## VII

We have seen that the perspective of critical interpretation had an impact upon the writer's method, his terms, and his values. In the following chapters I will analyze characteristic features of each of the three orientations. Because there was a major difference in critical method between the object and the subject orientations, we will find that the former stressed definitions of nature, while the latter stressed response analysis. The creator orientation, on the other hand, was not characterized by a specific method in this period. Its main feature was an attitude which rejected the conclusions of both of the other orientations. From the perspective of the present looking back on the past, it would seem that one philosophical idea led logically to another, and that every possibility of development of sundry themes was fulfilled. This is probably a distorted view of eighteenth-century reality, for the materials did not exist in the form that they do today, as a collection of documents that can be picked over and compared for evidences of historical systems. Yet, for the purposes of organization, an attempt will be made to demonstrate probable sequences in developments of ideas from one orientation to another.

## FOOTNOTES TO CHAPTER II

[1]Bernard Bosanquet, A History of Aesthetic (London: G. Allen & Unwin, 1922).

[2]A. O. Lovejoy, "Nature as an Aesthetic Norm," in Essays in the History of Ideas (Baltimore: Johns Hopkins Press, 1948), pp. 69-77.

[3]Milton C. Nahm, Genius and Creativity: An Essay in the History of Ideas (New York & Evanston: Harper & Row, Harper Torchbooks, 1965). 1st ed. pub. in 1956 under title: The Artist as Creator.

[4]Walter J. Hipple, The Beautiful, the Sublime, and the Picturesque in Eighteenth-Century British Aesthetic Theory (Carbondale: Southern Illinois Press, 1957).

[5]Samuel Holt Monk, The Sublime: A Study of Critical Theories in Eighteenth-Century England (New York: Modern Language Association of America, 1935; reprint ed., Ann Arbor: University of Michigan Press, 1960).

[6]R. S. Crane, "English Neoclassical Criticism: An Outline Sketch," in Critics and Criticism, Ancient and Modern, R. S. Crane, ed. (Chicago: University of Chicago Press, 1952), pp. 372-388.

[7]Rene Wellek, A History of Modern Criticism, vol. 1: The Latter Eighteenth Century; 4 vols. (New Haven & London: Yale University Press, 1955).

[8]M. H. Abrams, The Mirror and the Lamp: Romantic Theory and the Critical Tradition (London: Oxford University Press, 1953; reprint ed. 1976), see especially the introduction, pp. 3-29.

[9]Ibid., p. 6.

[10]Ibid., pp. 8-14.

[11]Ibid., pp. 14-21.

[12]Ibid., pp. 21-26.

[13]Ibid., pp. 26-28.

[14]Ibid., p. 8.

[15]Anthony Ashley Cooper, third Earl of Shaftesbury, Characteristics of Men, Manners, Opinions, Times, ed. John M. Robertson (New York: Bobbs-Merrill, 1964), I, pp. 222-223, 231.

[16]Samuel Johnson, The Yale Edition of the Works of Samuel Johnson, 9 vols. gen. eds. E. L. McAdams, Jr., Donald Hyde, Mary Hyde; vols. 7-8. Johnson Shakespeare, ed. Arthur Sherbo (New Haven: Yale University Press, 1958- ), 7:60-66.

[17]John Dennis, The Critical Works, 2 vols., ed., Edward Niles Booker (Baltimore: John Hopkins Press, 1939) 1: p. 325, et passim.

[18]Sublime originally meant a rhetorical style; it was increasingly used to indicate a feeling; see Monk, pp. 18-28.

[19]Although Blake's notes were written early in the nineteenth century, they will be considered here as documents of the eighteenth century because Blake spent the first forty-three years of his life, his most productive ones, in the eighteenth century.

[20]Earl of Listowel, A Critical History of Modern Aesthetics (New York: Haskill House, 1974). Listowel's study is intended to supplement and update Bosanquet's work.

[21]Plato :35.

[22]Aristotle Poetics.

[23]For a review of Kant's aesthetic see Bosanquet, pp. 255-285.

[24]Abrams refers to this perspective as a mirror, and writes that until the eighteenth century, critics generally used the mirrow metaphor (pp. 30-32).

[25]Abrams, pp. 200-201.

[26]Nahm, pp. 142-143.

[27]Stanley Grean, Shaftesbury's Philosophy of Religion and Ethics: A Study in Enthusiasm (Ohio University Press, 1967), p. xvii.

[28]Geoffrey Tillotson, Paul Fussell, Jr., and Marshall Waingrow, eds., Eighteenth-Century English Literature (New York: Harcourt, Brace & World, 1969), p. 871.

[29]Paul Hazard, The European Mind, 1680-1715, J. Lewis May, trans. (Cleveland & New York: The World Publishing Co., Meridian Books, 1963), pp. 3-28. In a general discussion of an emerging modern frame of mind, Hazard notes several trends which led to the dissolution of the old intellectual order.

[30]Martin C. Battestin, The Providence of Wit: Aspects of Form in Augustan Literature and Arts (Oxford: At the University Press, 1974), pp. 1-22. Battestin devotes his first chapter to the thesis that the Augustan sense of form arose from a belief in a regular pattern in nature which was based on the proofs of Newtonian physics.

[31]Walter Jackson Bate, From Classic to Romantic: Premises of Taste in Eighteenth-Century England (Cambridge: Harvard University Press, 1946), pp. 93-95.

[32]Ibid., p. 94.

[33]Ibid., p. 129.

[34]infra, chapter 4.

[35]Monk, p. 16.

[36]Monk calls Peri Hupsous a psuedo-Longinian text (p. 10). The work had become very important to French critics by the latter part of the seventeenth century. The text Peri Huspous is of unsure origin and date; see also introduction to: Longinus, On the Sublime, O. A. Richard, trans. (Oxford: At the Clarendon Press, 1906), pp. vii-xiv.

[37]Joseph Addison, Richard Steele, and others, The Spectator, 5 vols., ed. Donald F. Bond (Oxford: Clarendon Press, 1965), 3:527-582; hereafter cited Addison, with issue number and page.

[38]Ibid., no. 412, p. 540.

[39]Ibid., no. 412, p. 540.

[40]Marjoric Hope Nicholson, Mountain Gloom and Mountain Glory: The Development of the Aesthetics of the Infinite.

[41]Blake wrote of Milton (a poem) that it had been composed by divine dictation; see infra, chapter five.

[42]For a study of the changing roles of artists and the arts see Arnold Hauser, The Social History of Art, trans. Stanled Godman (New York: Alfred A. Knopf and Random House, Vintage Books, 1951).

[43]Monk traces the attitudes toward these two artists from the time of Vassari through the eighteenth century, pp. 164-173.

[44]Ibid., pp. 168-172.

[45]Sir Joshua Reynolds, Discourses on Art, ed. Robert Wark (Huntington, Ca.: Henry E. Huntington Library and Art Gallery, 1959; reprint ed. New York: Collier Books, 1966), discourse number IV, p. 74. The earlier lectures suggest that Raphael is superior to Michelangelo; it is in the fourth one that Reynolds explicitly stated this. The discourses will hereafter be referred to by number and page.

[46]infra, chapter 3.

[47]Hagstrum writes that in the eighteenth century the mirrow metaphor did not refer to physical nature, but rather to the nature of the mind. The doctrine of exact imitation was rejected by Reynolds, especially in the third and thirteenth discourses; it was attacked by Johnson in his rejection of the unities in his Preface to Shakespeare (p. 139n).

[48]William Hogarth, The Analysis of Beauty, ed. Joseph Burke (Oxford: At the Clarendon Press, 1955), p. 21.

[49]Ibid., pp. 54-55.

[50]Ibid., pp. 66-67.

[51]Reynolds, III, p. 45.

[52]Ibid., III, p. 46.

[53]Ibid., III, p. 48.

[54]Ibid., III, p. 48.

[55]Ibid., III, pp. 43, 46.

[56]Battestin, pp. 8-11.

[57]A. D. R. Borghese, A New and General System of Music, or the Art of Music, Deduced from the New and Most Simple Principles, translated from the original Italian by John Gunn (London, 1790), p. 5.

[58]Ibid., pp. 6-7.

[59]Pope wrote, "If ever any author deserved the name Original, it was Shakespeare. Homer himself drew not his art so immediately from the fountains of Nature . . . . The poetry of Shakespeare was inspiration indeed: he is not so much an imitator, as an Instrument of Nature; and 'tis not so just to say he speaks from her, as that she speaks through him" (quoted from Pope's Preface to Shakespeare by Abrams, p. 188). Pope expresses the same idea in An Essay on Criticism, writing that the early Greeks received their instruction from Parnasus. However, their "discovery" was the rules of art-poetic rule (see infra, chapter five).

[60]Alexander Pope, The Twickenham Edition of The Poems of Alexander Pope, 11 vols., gen. ed. John Butt; vol. 1: Pastoral Poetry and An Essay on Criticism, eds. E. Aurda and Aubrey Williams; vol. 7: The Illiad of Homer, Books I-IX, ed. Maynard Mack (London: Mewthen & Co. 1942-1969), 7:5.

[61]Ibid., pp. 5-11.

[62]Austin Warren, Alexander Pope as Critic and Humanist, Princeton Studies in English, number 1 (Princeton: Princeton University Press, 1929; reprint ed., Gloucester, Mass.: Peter Smith, 1963), pp. 46-50.

[63]Pope, 1:254-255, lines 68-73.

[64]Pope's idea of nature will be examined in the following chapter.

[65]Pope, 1: lines 88-91, p. 249.

[66]Pope, 7: pp. 5-6.

[67]Pope, 1: lines 146-149, p. 256.

[68]Ibid., lines 151-153, 161-162, 166-167, pp. 257,259.

[69]Ibid., lines 91-99, p. 250.

[70]Pope, 7:9.

[71]Ibid., p. 6.

[72]Monk writes of the Discourses, "They summarize broadly, sanely, and wisely the traditional views, and at the same time they show signs of changes that were beginning to overtake neo-classical art." (p. 182)

[73]Edmund Burke, A Philosophical Inquiry into the Origins of Our Ideas of the Sublime and Beautiful, ed. J. T. Boulton (London: Routledge and Paul; New York: Columbia University Press, 1958), pp. 13-14.

[74]Ibid., p. 17.

[75]Ibid., p. 21.

[76]Ibid., p. 15.

[77]Ibid., pp. 18-19.

[78]Francis Hutcheson, An Inquiry Concerning Beauty, Order, Harmony, Design, ed. with an introduction and notes by Peter Kivy (The Hague, Martines Nijhoff, 1973), p. 34.

[79]Ibid., p. 30.

[80]Ibid., p. 34.

[81]Ibid., p. 35.

[82]Ibid., p. 35.

[83]Ibid., pp. 35-36.

[84]Ibid., pp. 38-39.

[85]Ibid., pp. 39-41.

[86]Ibid., pp. 54-55.

[87]Ibid., pp. 55-56.

[88]Ibid., (editor's introduction), p. 8.

[89]Ibid., p. 43.

[90]Burke, pp. 114-115.

[91]Addison, 2: no. 160, pp. 126-130.

[92]Nahm, p. 137.

[93]Shaftesbury, I, 136.

[94]Ibid., I, 227-228.

[95]Ibid., I, 153, 251-253.

[96]Ibid., I, 251.

[97]Ibid., I, 251-253.

[98]William Blake, Complete Writings, ed. Geoffrey Keynes (New York: Random House, 1957), p. 989.

[99]Ibid., p. 471.

[100]Edward Young, Conjectures on Original Composition, in The Great Critics, ed. James Harry Smith and Edd Winfield Parks (3rd ed.,; New York: W. W. Norton & Co., 1967), pp. 407-443.

## CHAPTER III

## THE OBJECT ORIENTATION

> There is nothing in Nature that is great and beautiful without rule and order, and the more rule and order and harmony we find in the objects that strike our senses, the more worthy and noble we esteem them. [John Dennis 1710][1]

In a few words John Dennis has summed up the object orientation. The properties of beauty--order, rule, and harmony--exist in nature independent of our cognizance of them, and when we do recognize them, we appreciate them. The same is for the arts as it is for nature: Dennis went on to write, "I humbly conceive that it is the same in art and particularly in poetry, which ought to be an exact imitation of nature."[2] Here, very briefly stated is the core of the object orientation. The key terms and ideas are: (1) Nature is a phenomenon apart from man, (2) beauty exists in nature, (3) beauty is based on rule, order, harmony, (4) art is an imitation of nature, and (5) man is capable of recognition of beauty through his reasoning powers.

For the purpose of an analysis of the object orientation several topics will be taken up in this chapter: (1) the

general meaning of nature in the eighteenth century, (2) the meaning of nature in the critical theory of six writers, (3) the typical structure of an object-oriented work, (4) definitions of beauty, (5) definitions of invention and imitation, (6) genius and rules, and (7) the making of a genius.

## I

Two features are typical of the object-oriented perspective: (1) organization of the criticism is based on the definition of nature and the principles of beauty which are to be discovered in nature, and (2) because art was thought to reflect nature, analysis of the arts is usually founded on a discussion of their parts, rather than principles of association or principles of creativity--for example fable, diction, character development and meter in poetry, design, color, and line in painting, and harmony, melody, and expression in music.[3] Let us now look at the concept of nature, the model for art, as it was understood in the eighteenth century.

In their search for a general principle of beauty in nature, critics were looking for a unifying and stablilzing universal law. The Pythagorean, heavenly harmony which cemented the universe in concert was discovered to be a universal law of motion by Newton, a system of monads by Leibniz, a polyphonic harmony by Bach,[4] geometric reasoning processes by Descartes and Fontenelle, and ideal artistic

patterns guided through rule by Racine, Le Brun, Rymer, Dennis, Avison, Reynolds, Pope, and others. Some of these critical opinions reflect not only a clear object orientation, but a prejudice in stylistic taste as well. In music criticism, for example, Charles Avison was a proponent of the Baroque style: he appreciated thd fugal harmonic character of Luly, Rameau, Handel, Scarlatti and Corelli , but was critical of the older dissonant style of Purcell as well as of the newer melodic Rococo represented by Pergolesi and Vivaldi.[5] A stylastic prejudice is demonstrated by Reynolds in his preference of the Roman and Bolognian schools over the Venetian, Flemish, and Dutch.[6] Pope preferred the Mannerist and Baroque Shakespeare and Milton[7] to the "modern dunces."[8]

Nature, as Lovejoy pointed out, was a key term in eighteenth-century thought in Europe.[9] In British aesthetic thought the word nature acquired many fine nuances. Johnson's Dictionary lists eleven definitions of the noun, and as many more of the adjective and noun natural.[10] In retrospect we can discern many more than those ennumerated by Johnson. Lovejoy admits that his list probably does not cover all the applications of the concept in the eighteenth century. As a generalization the definition of nature in a critical context in the early part of the century usually refers to the universe apart from man, although man occupies a niche in the scheme.

By the mid-century man had become the central reference point for the definition of nature, taking the place of the created universe, as interest was increasingly directed toward human nature and motivation. In the search for man's "true" nature and the laws which govern it, an assumption was made which was similar to the earlier search for the general laws controlling the operations of the universe, i.e., that a reason, or system, could be discovered by which human behavior could be explained in terms of an universally operating principle. This concept of human nature was never totally given up by philosophers, although several of them looked upon man's nature as unique and unpredictable. For some, nature lost its predictability, at least any which could be discovered through reason. Hume's skeptcism is definitely an example of this vein of thought, although he did not fully develop the implications of his theory of knowledge in aesthetic terms, and probably had no influence on literary and artistic criticism along this line.[11] For Blake, at the end of the century, nature had lost its appeal as a concept because his interest was in the supra-natural and the mystical.

## II

In order to understand the important and complex role that the concept of nature played in these object-oriented theories, we will look at six critics' ideas of nature. The critical understandings of nature of Hogarth, Reynolds,

Johnson, Pope, Dennis, and Avison will be outlined and explained for this purpose. At times we will find that some definitions in one critic's system are contradictory; they are, nevertheless, important ideas which sometimes demonstrate areas of conflicting current opinions. Three major ideas of nature typical of the object-oriented perspective were indicated in the second chapter: nature as an empirically experienced phenomenon, nature as an abstracted pattern, and nature as an ideal pattern. These three interpretations were accepted by Hogarth, Reynolds, and Pope respectively; they are the basis on which sub-modes were defined in chapter two. We will find, however, that as a generalization, each of these six critic's definitions of nature also falls into three general categories: nature of the universe, nature as a guide or mirror for art, and nature of man.

Hogarth's relatively simple concept of nature as a physically experienced world was also recognized by Pope, Reynolds, and Johnson, among others who also wrote in the object-oriented mode, but these others also fitted a number of other more important definitions into their system. When drawing upon examples to illustrate the principles of beauty, Hogarth made it clear that beauty if found in specific things which conform to the principles. Again and again he referred to the human body and other specific forms. "The beauties of the lily, and the Calcidonian Iris proceed

from their being composed with great variety . . . .[12] The variety Hogarth wrote of is one of several causes of beauty in nature, along with fitness, uniformity, quantity, simplicity, and intricacy. Each of these principles, however, had to conform to the principle of the line of beauty.

Hogarth advised the artist to develop a method of looking at things which would help him develop the lines needed to represent them from any aspect, and eventually, with practice, from memory. The line is the central element of Hogarth's analysis, for, "the straight line and the circular line, together with their different combinations, and variations, etc. bound and circumscribe all visible objects whatsoever . . . producing [an] endless variety of forms . . ."[13] The method which the artist must use to discover the necessary lines is to imagine that every object is a shell, scooped out so that nothing is left but the outline; the outline form is composed of fine threads so that the artist can see the inside, outside, and all sides at once with his imagination.[14] Thus the artist conditions himself to conceive in terms of line to understand nature, and hence, the specific forms presented to the eye are the central issue in Hogarth's aesthetic attitude.

The figures represented in Hogarth's accompanying plates demonstrate that this artist-critic finds beauty in some of nature's forms and not in others. The plates are also used to demonstrate that some representations taken

directly from nature are more graceful and beautiful on the basis of the curvature of the lines used to draw them than others taken from the very same source. Compare the three human leg drawings in Plate 2 (numbers 65, 66, 67): figure 65 "shows the serpentine forms . . . as they appear when the skin is taken off . . . . It was drawn from a plaster of paris figure cast off nature . . . however, they lose in the imagination some of the beauty they really have . . . ." Figure 66 "was also taken from nature; . . . but treated in a more dry, stiff, and what the painters call, sticky manner." The remaining figure 67 is without the "waving line" and is so wooden that it could easily be used as a chair leg.[15] (The passage stating that some of the real beauty is lost in the imagination suggests that Hogarth thought that art could not surpass nature.)

In Hogarth's system, if the artist's purpose is to express beauty he needs only to use the lines and figures which conform to the formula (the formula must also be considered with respect to composition); if his purpose is to depict the ridiculous or the ugly, he needs only to eliminate the graceful lines. This is a very simple system of beauty, and the reader does not need to infer philosophical implications about the probability of occurrences of the "S" line in nature or a mathematical ideal pattern, because beauty actually exists in some of the forms of nature as it is expressed by the senses, while it does not

exist in other forms.[16] The object in nature and the object represented in art cause appreciation in the mind, that is, the rational part of the mind. Appreciation arises from the actual qualities in objects and the fact that the mind was designed to be naturally pleased with beauty.

Hogarth's idea of nature can be demonstrated in outline form with three major headings representing nature as it appears to the senses, nature as it is reflected in art, and man's nature which shows the two traditional characteristics of rational and irrational. Hogarth did not concern himself with the nature of man, and this last category must be inferred from his attitude about art;[17] it is included here to demonstrate the consistency of object-oriented critical attitudes in this period. The first category representing physical nature includes all that meets the senses; some of these forms are beautiful, some ugly, and some inbetween. The second class of nature is art, which imitates all of these things, depending on the intent of the artist; we can see that Hogarth himself chose to imitate the beautiful as well as the ugly in his work.

I. Physical nature

1. Forms composed of the S line (the beautiful)

2. Forms composed of straight and angular lines (the ugly)

3. Forms composed of a combination of these

II. Art as it reflects nature

4. A copy of forms composed of the S line

5. A copy of forms composed of straight and angular lines

6. A copy of forms composed of combined lines

III. Human nature

7. Rational aspect

8. Irrational aspect

For Hogarth, then, nature is as simple as a human form, or a pineapple, copied by the artist, and appreciated by a reasonable person.

In Reynold's aesthetic model the physical form on which Hogarth's beauty depends is only a secondary truth--it is the particular. In art he sought the general, which is primary truth. Truth and nature here are synonomous. The primary truth is an abstract of nature called the central form; it is a composite of all forms in any one class, such as human beings or tulips. Reynolds's is not a Platonic concept; it does not exist in an other-world of pure form, nor does it originate a priori in the mind. It exists in visible particulars which are combined by the artist to make a new form, a composite, which can be seen nowhere in the nature experienced by the senses.

Combinations of particulars to form a composite is an idea which can be traced back to the early Greeks. The story is told by Socrates that the fifth-century painter Zeuxis chose the five most beautiful girls and combined their excellencies to depict Helena.[18] Reynolds's idea of nature

was that these excellencies comprise the intended pattern of nature, the ideal general model from which every particular deviates somewhat.[19] The definition of nature as simply what we see--the secondary and the particular--played a subdued role in Reynolds's critical theory.[20] The secondary truth is characterized by particular habits, customs, and distinctive features.[21] The primary truth, the central form, is the meaning of nature which was important for the aesthetic attitude outlined in the Discourses. Reynolds's idea of the central form was clouded by his special interest in portraiture. Thus, his concept of the ideal tended to mean an average rather than a Platonic Ideal.

In his introduction to the third discourse Roger Fry notes that Reynolds used the word nature in three separate senses: (1) that which is visually experienced, (2) that which is intended in the Aristotle sense, but not fully realized in the empirical sense, and (3) that which is agreeable to the human mind.[22] Reynolds actually applied the terms nature and natural in at least eleven specific situations which appear in the outline given below. The three classes indicated by Fry are retained within categories one and two, and are indicated by his name in parenthesis.[23]

I. Nature of the universe, both as pattern and as actualization of that pattern

1. The empirical, sensate world (Fry No. 1)

2. The average of the empirical world--the general and the central form, like the class of humans (Fry No. 2)

3. The generic type, more specific than the central form, like the Gladiator or Apollo

4. The idea of nature in the artist's mind, i.e., beauty

II. Nature as a pattern for art

5. That which conforms to nature (number 1), such as speech

6. A mode of representation, defined as artificial, but necessary for conveying the types of nature in definitions 2, 3, and 4 (poetry, painting)

7. Anything that pleases the human imagination (Fry No. 3)

III. Human nature

8. A human drive for truth

9. An inherent principle (not a drive) which appreciates regularity and congruity

10. The intellectual, judgmental, and rational part of man

11. The sensate, emotional, and irrational part of man.

Reynolds's use of nature falls into the same types of classifications as Hogarth's. His ideas, however, are much more complex and sophisticated, and they can be linked to a tradition of literary and artistic criticism. There are four sub-modes of nature as it is experienced by the senses; only one of these is physical, number 1, which is a collection of particulars, all of the individual things we see, as well as customs and individual habits. Within this

class we will find such things as modes of dress,[24] preferences of familiar types of beauty accepted by custom and habit,[25] and such accidental forms as the variety in the shapes of leaves.[26] The last three sub-modes of empirical nature are all conceived in the mind of the artist, but are based on his experience with nature as defined in number 1. The average, or central form, consists of the summary of particularities the artist observes in empirical nature for a certain species of things. Thus, there is a central form for humans, presumably a young man.[27] This central form consists of the average of all the generic types such as the gladiator and the Apollo. The generic type is much more specific than the central form; besides the gladiator, etc.,[28] it presumably contains a generic Etheopian and a generic European.[29] There will be a central form and generic type for all classes of things as trees, and all creatures. The idea of nature as it appears in the artist's mind is a concept that comes close to Platonism; yet, it is still an idea of beauty which is based on individual things, and not gathered from the world of ideas. Of this idea Reynolds wrote,

> but the beauty [nature] of which we are in quest is general and intellectual; it is an idea that subsists only in the mind; the sight never beheld it, nor has the hand expressed it: it is an idea residing in the breast of the artist . . . .[30]

Reynolds's first object was to define what it is that the artist is to represent--what beauty there is in nature.

The second objective was to define art in terms of its representation of that nature and that beauty; thus we have the three classes of representation. The first is an accurate or exact imitation of nature such as the work of the Dutch schools.[31] The mode of representation recommended by Reynolds for the "higher styles" in the arts was called artificial in the thirteenth Discourse. The natural kind of imitation, he said, is the exact copying we first learn and admire. The higher, more artificial, means of poetry, singing, drama, and the painting of Raphael, is art.

> For want of this distinction [between imitation of actual nature and departure from nature], the world is filled with false criticism. Raffaelle is praised for naturalness and deception, which he certainly has not accomplished, and as certainly never intended; and our great late actor, Garrick, has been as ignorantly praised by his friend Fielding . . . by introducing in one of his novels . . . an ignorant man, mistaking Garrick's representation of a scene in Hamlet, for reality.[32]

Art as a reflection of nature in the sense of anything that pleases the human imagination includes both the lower and higher styles of all the arts. It includes things which please those who have not cultivated their imaginations, as well as things which please the most refined tastes.[33] The number of things which please the imagination indicates an object orientation because attention is focused on the object and its configuration, rather than on the principle in the mind which makes one pleased with them. Here Reynolds seems to be very close to Hogarth because the cause of man's pleasure is imposed from without and bears

a direct correspondence to the object. We have seen, however, that Hogarth identified beauty as the "S" curve; Reynolds's concept of that which delights the imagination is more inclusive.

Reynolds's seventh Discourse is almost entirely devoted to a study of human nature. The artist, he wrote, must understand the human mind in order to "be a great artist."[34] Reynolds's understanding of human nature has several modifications, but two major assumptions pervade his entire attitude: that there is a general uniformity among men, and that human nature, whatever form it takes, is static. His argument for general uniformity sounds like something his friend Burke might have said, that is, that the general uniformity of our forms implies a similitude of feelings and imaginations.[35] Of the static nature of things, he wrote that nature is a fixed principle, implying both human nature and external nature.[36]

There are four distinct facets of human nature in Reynolds's attitude. The natural appetite of the mind, he said, is for truth,

> whether that truth results from the real agreement or equality of original ideas among themseleves; from the agreement of the representation of any object with the thing represented; or from the correspondence of the several parts of any arrangement with each other.[37]

His conception of truth was in step with the feeling of his era, for it reflected not only association of ideas, but traditional literary and artistic critical standards as well.

The imagination is a feature of human nature which roughly parallels the central form (definition number two) because the general ideas which appeal to it are a kind of internal central form.

> My notion of nature comprehends not only the forms which nature produces, but also the nature and internal fabrick and organization, as I may call it, of the human mind and imagination.[38]

We have already seen that there are a number of classes of things which appeal to this imagination; but the principle of the imagination is general and uniform for the species. It is on these grounds that a system of rules can be devised to appeal to the imagination in general. The imagination is different from taste, which can be either good or bad: the Dutch appeal to the imagination, and they conform to nature (definition number one). Such an appeal, and such an observance of nature, however, do not constitute good taste.[39]

Man's nature can also be characterized as intellectual, reasoning, and judgmental on the one hand, and sensitive, emotional, and enthusiastic on the other. Reason and judgment are connected with good taste:

> We will take it for granted that reason is something invariable and fixed in the nature of things . . . whatever goes under the name of taste, which we can fairly bring under the dominion of reason, must be considered as equally exempt from change.[40]

The other side of man's nature, the sensate part, is responsible for his attraction to the inferior styles and subjects. The artist must not address himself to this nature.[41] Enthusiasm is also an apparent characteristic

feature of this side of human nature; in the third discourse Reynolds opposed reason and enthusiasm, noting that the artist learns his art through experience and observation, not flights of fancy.[42] By the time of the thirteenth discourse, Reynolds was willing to give the part of feeling more importance in the workings of the imagination and less to an observance of nature.

> The great end of all the arts is to make an impression on the imagination and the feeling. The imitation of nature frequently does this. Sometimes it fails and something else succeeds.[43]

The meaning of nature in this context is not simply the central form which the artist has labored so long to find in the obvious forms; here he fully intended the artist to take advantage of some of the accidents of nature in order to fire the imagination.

> the Painter ought always to have his eyes open, I mean [to use] accidents; to follow when they lead, and to improve them, rather than to always trust to a regular plan . . . . Upon the whole it seems to me that the object and intention of all the arts is to supply the natural imperfection of things, and often to gratify the mind by realizing and embodying what never existed but in the imagination.[44]

Two further observations must be made about Reynolds's concept of nature. He did not see nature in any modern sense as changing or evolving. The static character of external nature and human nature was the basis upon which he built his standards of art. To have accepted a fluctuating nature would have jeopardized his theory. Also,

deformity was explicitly eliminated from his concept of nature; he stated, "deformity is not nature, but an accidental deviation from her accustomed habit."[45] He had written earlier that deformity had its central form.[46] We can see from the context, though, that the mode of nature in the third discourse was the sensitively experienced (number two). Thus, deformity exists in physical nature and has a central form; it does not, however, exist as an intent of nature as pattern.

Johnson's awareness of the diverse meanings of the concept of nature is apparent in the numerous definitions he lists in the Dictionary. However, his critical use of the idea falls into three major categories analogous to those used by Hogarth and Reynolds: empirical nature as it is discovered through the senses, nature as an asethetic norm, and human nature.[47] The three classes are indicated in the outline below with sub-modes within each. A very careful reading of his critical works would very likely reveal more applications, but those below are the most obvious and important nuances in his system of criticism.

Hagstrum also talks about Johnson's use of nature in terms of these three categories: the general-particular external nature, art, and man.[48] He tries to reconcile the conflicting elements of Johnson's definitions of nature to demonstrate the continuity of his critical system; I am, however, merely enumerating them. Two other

things should be noted about the following outline: several types of representations of nature in aesthetic forms have been included under sub-heading number two because they reflect Johnson's attitude about the relationships between empirical nature and art. Also, it should be noted that Johnson had no dualism of physical nature and its abstract or ideal; thus all nature is realized in action or in form. The outline, then, indicates no central form and no abstract form.

I. Empirical nature

1. General nature

2. Particular nature

II. Nature as a pattern for art

3. That which conforms to general nature (a copy of number 1)

4. That which conforms to particular nature (a copy of number 2)

5. Artificial: a pattern for styles and genres

6. Naturalness of things for styles and genres of tragedy and comedy--general and particular at the same time

7. Unnatural, indecorous, a deliberate mixture of style and content

III. Human nature

8. Common sense (a principle)[49]

9. Judgment--common sense (a general principle) combined with knowledge (an accident or particular)

10. Passions

11. Natural talent

12. Natural taste (similar to number 11 but without power of execution)

13. False taste, an appreciation of unnatural (number 7)

14. Physical, social, and cultural decay

Most of these definitions can be found in the Dictionary under nature, genius, art, and related terms. The uses of nature in a critical context can be seen in his Preface to the Works of Shakespeare (1765), a few essays from The Rambler (1751), and the Lives of the Poets (1781).

Johnson's understanding of the difference between general and particular nature is similar to Reynolds's distinctions. Specific customs such as costume, and stereotyped habits such as "kingly behavior" as opposed to general human behavior are examples of particular nature; Shakespeare is praised for his avoidance of these traits.

> We knew that Rome, like every other city, had men of all dispositions; and wanting a buffoon, he went into the senate-house for that which the senate-house would certainly have afforded him. He was inclined to shew an usurper and a murderer not only odious but despicable, he therefore added drunkenness to his other qualities, knowing that kings love wine like other men, and the wine exerts its natural power upon kings.

General nature, as for Reynolds, concerns the non-particular, or the broad similarities between various people and places; thus, Johnson was not concerned that Shakespeare's characters do not dress in the fashion of the period they represent, or behave in the particular manners of their societies. He wrote on this point about Shakespeare's generalities,

> His adherence to general nature has exposed him to the censure of critics . . . . Dennis and Rhymer think his Romans not sufficiently Roman; and Voltaire censures his kings as not completely royal . . . . His story requires Romans or kings, but he thinks only on men.[51]

Although Johnson recognized several meanings of the word nature as it applied to the physical world, only the general and the particular in the sense of something experienced by the senses were important to his critical theory; in other words, the word nature applied not to the physical laws and God's intent, but to things as they are actually experienced (see footnote 47). Hagstrum also notes this aspect of Johnson's criticism, writing that in general Johnson was not influenced by philosophical systems, viz. Platonic, Cartesian, and Leibnizian cosmologies. Thus, moral purposiveness has no place in his system, "religion and poetry are effectively divorced."[52] (A glance at the outlines will demonstrate that Reynolds, Dennis, and Pope all recognized a regular, purposive pattern to the universe which can be identified, in some cases, as a moral law.)

Johnson thought of art in terms of a copy, or mirror of nature; in this context of art as an aesthetic norm, he defined five distinct categories of representation. A copy of particular nature is simply an imitation of the particular habits and customs which distinguish one class of men from another. It is artistic realization of empirical nature (number two).

> Shakespeare is above all writers, at least above all modern writers, the poet of nature; the poet

> who holds up to his readers a faithful mirror of manners and of life. His characters are not modified by the customs of particular places, unpracticed by the rest of the world; by the pecularities of studies of professions . . . or by the accidents of transient fashions or temporary opinions . . . .[53]

To copy general nature, on the other hand, is to imitate true nature.

> Shakespeare has no heroes; his scenes are occupied only by men, who act and speak as the reader thinks that he himself should have spoken and acted on the same occasion.

Johnson thought of art as an artificial mode of expression, a pattern for the styles and genres in the arts. He noted that the arts are artificial in the sense that they provide means for entertainment which is not to be realized in day to day existence. Here his opinion as close to Reynolds's (and likely influenced it); artificial refers not only to such elements as rhyme and meter, but to form, such as drama and ode.

> The original of this precept [only three speaking persons on stage at once] was merely accidental. Tragedy was a monody or solitary song in honor of Bacchus, improved afterwards into a dialogue by the addition of another speaker; but the ancients, remembering that the tragedy was a first pronounced only by one, durst not for some time venture beyond two . . . .[55]

Within representation of the general is naturalness of things as they exist, such as the co-existence of comic and tragic elements in life--the co-existence of good and evil.

> Shakespeare's plays are not in the rigorous and critical sense either tragedies or comedies, but

> compositions of a distinct kind, exhibiting the real state of sublunary nature, which partakes of good and evil, joy and sorrow, mingled with endless variety of proportion and innumerable modes of combination; and expressing the course of the world in which the loss of one is the gain of another . . . .[56]

The unnatural is an indecorous and deliberate false wit-conceits.

> These conceits Addison calls mixed wit, that is, wit which consists of thoughts true in one sense of the expression and false in the other . . . . That confusion of images may entertain for a moment, but being unnatural it soon grows wearisome.[57]

Johnson's view of human nature was complex and covered a number of qualities. Man is characterized by common sense,[58] by his passions or feelings,[59] and by his reason and judgment.[60] There is also an element of natural talent, expressed as natural faculties.[61] His aesthetic preferences may be good in a natural sense:

> But this kind of disgust [in a mean or common thought] is by no means confined to the ignorant or superficial; it operates uniformly and universally upon readers of all classes; every man, however profound or abstracted, perceives himself irrestibly alienated by low terms . . . .[62]

This natural taste is similar to talent, but without the skills of execution. Man may also acquire a false taste, a preference for artificiality, or the accumulation of bad rules. Rambler number 156 is devoted to such a situation in societies. Societies and governments naturally accrue too many laws and rules and become cumbersome under the weight of regulation. An accumulation of rules, he wrote, has

dictated a certain taste, and "it ought to be the first endeavor of a writer to distinguish nature from custom."[63]

Johnson's concept of nature as a system of cultural, social, and physical decay entered into in his criticism because it explained the superiority of the ancients as well as the superiority of Shakespeare who was an ancient in the sense of having been unaware of the rules.

> Every government, say the politicians, is perpetually degenerating towards corruption. . . . Every animal body . . . [is] continually declining towards disease and death. . . . In the same manner the studies of mankind not being subject to rigorous demonstration, admit the influence of fancy and caprice, are perpetually tending to error and confusion.[64]

Johnson and Reynolds had similar ideas about nature; differences can be attributed to the nature of their media, and to Johnson's strong emphasis on human nature--his defiance of the established rules--as well as Reynolds's acceptance of them. Some points in common are very general, and to some extent can be seen in several writers of the period. The similarities between these two are striking because they each use almost the same illustrations to prove their points: they recognized: (1) the general and the particular in nature, assigning the major value to the general in artistic representation, (2) a basic dualism in human nature between the judgmental and the emotional, and the need to cultivate the judgmental in order to appreciate the general in nature and in art, (3) the critical method of evaluating the categories, or hierarchies of the

arts as reflections of nature, and (4) "artificial" nature of the arts.

As we have seen, John Dennis wrote that there is nothing in nature that is great without rule and order. His ideas of nature are stated clearly enough that they can be ordered almost entirely on the basis of one source. In The Advancement and Reformation of Poetry we can see that Dennis's categories of nature roughly correspond to those of Reynolds and Johnson: the material world and its pattern (rule), called the larger universe; the nature of art which is founded upon the material world; the nature of man. Of these, art and man are copies of the larger universe.

I. The larger universe

1. The pattern or law of the universe

2. Regularity in the visible world

3. Irregularity in the visible world

II. Art as a copy of the larger universe

4. The pattern of art, rules and genres

5. Regularity in art, which follows the rules

6. Irregularity in art, which does not follow the rules (bad art)

III. Nature of man

7. The guiding pattern of behavior, reason

8. Behavior which follows the pattern of reason

9. Behavior which does not follow reason's pattern

Dennis's theory of art and nature is so succinctly

stated in one paragraph from the Advancement that his definitions one through nine are easily discernable. (The paragraph begins with the two quotes at the beginning of this chapter.)

> Now Nature, taken in a stricter Sense, is nothing but that Order and Rule, and Harmony, which we find in the visible Creation. And the little World, which we call Man, owes not only its Health and Ease, and Pleasure, nay, the Continuance of its very Being, to the Regularity of the Mechanical Motion, but even the Strength too of its boasted Reason, and the piercing Force of those aspiring Thoughts, which are able to pass the Bounds that circumscribe the Universe. As Nature is Order and Rule, and Harmony in the Visible World, so Reason is the very same throughout the invisible Creation. For Reason is Order, and the result of Order. And nothing that is Irregular, as far as it is Irregular, ever was, or ever can be either Natural or Reasonable. Whatever God created, He designed it Regular, and as the rest of the Creatures, cannot swerve in the least from the eternal laws pre-ordained for them, without becoming fearful or odious to us, so Man whose Mind is a law to itself, can never in the least transgress that Law, without lessening his Reason, and debasing his Nature.[65]

Art, he wrote, should imitate the order of nature, for order has made things beautiful, and the cessation of order would bring chaos.[66] Art must also be reasonable in the sense of its function in society. If it is detrimental to that society it is unreasonable, and thus, contemptible. Dennis, for example, thought that the opera was a pernicious form of art which would have an adverse effect on man's behavior. A large part of the Essay on Public Spirit (1711) was devoted to the extravagance of the Itallianate opera; he censured the opera on several grounds in his Essay on the Opera (1706).

The object-oriented attitude of Dennis's structure and theory of nature and art is more obvious and more orderly than either Johnson's or Reynolds's. Dennis stated that the "little worlds" of man and the arts are but copies of nature "in the stricter sense." The outline sketch does not show, however, the apparently subjective element which can be detected in his major works, the element of the sublime. His high regard for the sublime was so noted in his own time that he was dubbed "Sir Tremendous Longinus" by his contemporaries. Dennis thought that the imitation of religious topics would elicit the emotions of awe, wonder, and astonishment. The sublime, though, is not an aesthetic mode apart from beauty, but rather a higher form of beauty; and, like beauty, it is found in the subject matter, that is, in the object which receives artistic attention. The idea of the sublime as a mode distinct from beauty, and having a different cause than beauty, as well as a different effect, lies just below the surface of his critical attitude; it was left to Addison to expressly state that different emotions can be attributed to aesthetic causes.

Although Dennis and Pope quarreled on personal and critical matters, their ideas about art and nature were very similar. Pope's philosophical ideas were much more complex than Dennis's probably because his interests were broader, (extending into architecture, gardening, philosophy) and his genius was brighter. Pope's system of nature was

built on a well defined metaphysical structure and supported in part by various ideas drawn from Leibniz's "best of all possible worlds" in the moral sense, Hobbes's and Mandesville's philosophies of society, and Bolingbroke's political rationale.[67] Pope's Essay on Man is a virtual laboratory for the study of early eighteenth-century ideas of nature; the first fourteen examples in the following outline were drawn from this source alone; numbers fifteen through eighteen come from the Essay on Criticism. Because Pope's use of the concept of nature was so important in his criticism, other methods of categorization are possible, and some applications may have been overlooked. The first, second, and fifth classes correspond to the previous examples of Hogarth, Reynolds, Johnson, and Dennis; the third and fourth are unique to Pope. The lines from which the ideas are drawn are indicated in parenthesis, along with Epistle number where applicable, followed by the words man or criticism to indicate either the Essay on Man or the Essay on Criticism.[68]

I. Cosmological order

A. Non-material order

1. A pattern which functions as a whole and operates by general laws, implying the order of the physical world (I, 6, 60, 146, Man); a plentitude with all possible positions filled--the Great Chain of Being (I, 33, Man); the best of all possible systems whose order is maintained by strife (I, 168-172, Man)

2. A conscious principle in charge--God; a purposive intent of nature (II, 175-202) Man); nature acting by laws toward an end (III, 1-2, Man)

3. A universal moral pattern (I, 168-172, Man)

B. The physical order

4. Mother nature as a wild garden full of plagues, earthquakes, etc. (I, 7-8, 155, Man); self sustaining and plentitudinous (III, 15-26, 42-48, Man)

5. Generator of life, animate and inorganic (I, 131-140, Man)

II. Human nature; non-material nature

6. What is usually characteristic on man, e.g., flawed (I, 36, Man); sufficiently perfect (I, 70, Man); hopeful (I, 95, Man); too much knowledge (II, 5, Man)

7. Passions and drives in the sense of a Divine plan (II, 112-120, Man); natural drives of self-love, sex-love, race-love (III, 131-134, Man)

8. Moral nature, determined by his position in the Great Chain (I, 205-210, Man)

III. Original and present states of nature

9. Man before socialization, in which state all creation lived without strife (III, 147-161, Man)

10. Artificial, unnatural; present social state in the sense that man-created institutions are unnatural (III, 151, 169, Man)

11. Naturalness of the present social state in that it is a copy (although a poor one) of the original (number nine)--(III, 283-300, Man)

IV. Organic nature

12. Societal growth hinted at in the origin of societies, a philosophy of society and history (III, 199-302, 277-278, Man)

V. Mimetic pattern for art and for man

A. Behavioral

13. A physical pattern to follow for socialization (III, 171-198, Man)

14. A moral pattern to be imitated (I, 205-210, Man)

B. Artistic

15. Nature as a pattern for artistic imitation; the average as decided by concensus gentium (68-69, 297-298, Criticism)

16. A set of rules which summarize nature (88-89, Criticism)

a. Genres (323, Criticism)

b. Modes of expression (345-373, Criticism)

17. The ancients as a summarization of nature (135-140, Criticism)

18. A moral pattern for art (559 et passim, Criticism)[69]

Pope's interest in philosophy obviously affected his critical attitude, making it much more complex than any previously outlined. His orientation, however, was as object oriented as Dennis's and Reynolds's. Pope and Dennis both saw the cosmological order as a pattern for imitation by man and art. Beauty is intrinsic in nature's order and its determinable principles; beauty and the principles of nature exist as a rule or pattern whcih can be "seen" with the understanding. It is not directly observable as Hogarth's "S" line, but it is just as real as a principle of art.

Charles Avison's idea of nature is also based on a pattern, the pattern of harmony. Avison's system, however, is so eclectic that his idea of nature comes very close to Hogarth's: the emphasis is on the sound as it is represented in harmony, melody and expression rather than on the harmonic pattern of the universe which music imitates.[70] The musician composes with actual sounds and blends them into patterns of melody and harmony, which when fortuituously combined, create musical expression. The principles of melody and harmony are as physically understood as the "S" curve.

Avison made a distinction between expression and imitation; imitation is the representation of things or symbols, such as a division of "half a dozen bars on the word divide." This practice is frowned upon because it "diverts the attention from the purpose of expression."[71] Expression is a mixture of airs and harmony which elevates our thoughts and gives pleasure.[72] We see further that expression is based on harmony and air.[73] Music, though limited in its mimetic capacity, that is other than its ability to imitate the harmonic patterns inherent in nature, can imitate sound and motion.[74]

Without the two introductory essays, "On the Force and Effects of Music," and "On the Analogies between Music and Painting" Avison's system would be as simple as Hogarth's. The first essay shows considerable influence of a subject

orientation; Avison wrote, for example, that man possesses an internal sense of harmony, and a principle of sympathy which operate in a manner reminiscent of Hutcheson and Gerard. The second essay on music and painting discusses the relationship of the two arts to empirical nature. The third section which comprises the major portion of the Essay is devoted to an object-oriented analysis of music based on the application of a fixed standard of the science. In many ways the three divisions of the work cannot be integrated into a compatible whole because some of the ideas are contradictory. Thus, the second and third sections stand in opposition to the attitude of the first section. Avison's system is based on an implied understanding of a geometrically patterned universe.

I. Empirical nature

1. Nature experienced through the senses

2. The geometric pattern of the universe

II. Art as a representation of the empirical universe

3. Defective compositions

4. Art as a representation of the patterns appropriate for their media: harmony and melody, color and design

III. Human nature

5. A sense which appreciates harmony (and etc.)

6. The physical senses

Because Avison was not interested in a philosophical order of the universe, the structure of "empirical nature"

is drawn largely from inference and not direct statement. The sources of beauty, he wrote, are melody, harmony, and expression; their operations are by a fixed standard inherent in the nature of music, and the misuse of any, or the imbalance of one over another, will result in an imperfect composition.[75] A discussion of the internal sense of harmony is found in the first essay; Avison's intent seems to be that there is a difference between this sense and the ability to hear sounds.[76]

The general idea of nature expressed by Hogarth, Reynolds, Johnson, Pope, Dennis, and Avison had in common a fixed principle which can be discovered by reason and the observation of empirical nature. Each of these interpretations of nature was offered with the express understanding that the artist was to imitate the beauty he finds, whether it is in a pattern, an ideal combination of parts, or in the physical material itself.

## III

Imitation and method (or the means of imitation) are the two basic concepts for the object orientation; they involve an intelligent observation of nature (just defined) and a set procedure of artistic representation which is determined by the "type" or mode of nature the critic had in mind. First an examination of the characteristic structure of an object-oriented work is in order, followed

by a look at the concepts of beauty upon which structure is based, and at imitation as a means of achieving beauty in art. Finally, characteristic attitudes toward rules and genius will be discussed.

The second clue to an object orientation (the first was the definition of nature) is the structure of the criticism, since object-oriented analysis tends to be organized on the basis of the elements of the arts under consideration. The obvious reason for this kind of emphasis is that the elements of the arts represent an application of the rules, the method of imitation. And the rules are a short cut, an established method for the observations of nature which have been made over the centuries. Thus, the unities of time, place, and action, among other rules in drama, color and line in painting, and harmony and melody in music are fundamental to the object-oriented attitude in criticism.

Dryden, as we have seen, compared the elements of poetry and painting--congruity and conception, expression and coloring, and invention. Harris and Avison devoted large sections of their essays to the similarities of the elements of the arts. Reynolds drew several analogies between poetry and painting. In writing of invention, which is an important ingredient of all the arts under various names, Pope called it one of the tres partes of poetry.[77] Warren writes that Pope applied the term inven-

tion in its Aristotelian sense of "to find" or "to discover."[78] The object of Pope's discovery was the pattern in nature; thus, invention is the observation and imitation of nature in a very special sense as opposed to making up one's own pattern. Pope's invention obviously corresponds to Reynolds's conception and Johnson's invention, all are used to indicate one of the fundamentals of art. Language and versification are the two other parts of poetry which concern Pope. These two elements are of utmost importance to his poetic theory, for they are ultimately based on the patterns he found in nature and in art, the imitation of nature.[79] Both of these are elaborated on in the Essay on Criticism and the Preface to the Illiad.

Dennis, like Dryden and Pope, based his literary criticism on the structural elements of the art. The important element to him was the subject matter, that is, the object of imitation. In the Advancement he wrote that the success of a literary work depends on its subject rather than some external influence such as time period, geography, climate, or location.[80] It is the subject which provides the opportunity for the poet to express passion--the subject, rather than the imagination of the poet, is great. Dennis defined a poem as "an Imitation of Nature, by a pathetic and numerous Speech [which is] more Passionate and Sensual than Prose."[81] The passion (not ordinary passion, but enthusiasm) is in the poem by reason of its subject; it is not necessarily in the mind of the poet, who indeed

merely transfers it from the subject to the art through the observation of the rules. The rules are, as for Reynolds, an accumulation of hundreds of years of observations of nature.

Although Johnson was critical of the traditional rules, his aesthetic interpretation is object oriented. He advised the artist to follow general nature--the same general nature Reynolds wrote of, the average of empirical nature. In the Preface to Shakespeare Johnson based his analysis of the plays on character depiction, development of the story, propriety of the genres, and representation of general nature, that is, a valid representation of human nature in sentiment and motivation sans pecularities and particularities. In the criticism of Shakespeare Johnson spoke of faults and excellencies; the faults are seen to be in the art--the narration, speeches, plots and unities.

James Harris's observations, as pointed out in a previous chapter, were based on the limitations and advantages of the various media to render an accurate imitation of ideas and things. Thus, he directed his attention to motion, sound, color and figure as they are received by the senses and reproduced in the arts. The delight of the senses, however, is Aristotelian rather than Lockean, for delight is founded on the mimetic qualities of the arts and not a train of ideas. The use of symbols to elicit ideas is an important factor in

Harris's criticism, as it is on this principle that he ranked poetry as the highest of the individual arts.[82]

Avison made comparisons of the arts similar to Dryden's and Harris's. Indeed, he quoted Harris several times in his footnotes. His parallels, like their's, were based on the structure of the arts. Both music and painting are "founded in geometry"; in both, excellence depends on design, coloring, melody, harmony, and expression. Although he devoted the first section of his book to subject-oriented analysis of the effects of music, his basic work, section two on the parallels of music and painting, and parts two and three on expression in music are addressed to the importance of balance between the three fundamentals of harmony, melody, and expression. The work is not as technical as many musical treatises tend to be because his basic concern was the general principles of the art rather than the particular techniques of the musician.

In the plastic arts Hogarth, Reynolds and Jonathan Richardson[83] spoke to the fundamentals of line, coloring, composition, and form. Hogarth's analysis is as close to a purely object-oriented perspective as can be found in the eighteenth century. Reynolds had been strongly influenced by the consideration of the subject's reaction to the material. Yet, for Reynolds, the subject's response is gaug d largely by what is contained in the art rather than by what he brings to the art from his own experiences and background. In Reynolds's system if the subject or the

artist, does temper his judgment with personal opinions, which may be irratic and enthusiastic, his judgment is incorrect and in bad taste. Ideas about the central form and general nature, not individual and particular notions, constitute the basis of judgment. Although this critic and artist put considerable emphasis on coloring, composition, and clothing, among other details, (which he would prefer to leave to the teachers in the Academy),[84] he put his major emphasis on the "grand conception."[85] This conception is similar to Pope's and Johnson's use of invention; it is also based on the observations of general nature. And like Pope, Reynolds found that general nature is expressed by "those rules of old discover'd, not devis'd." Both Reynolds and Pope wrote of that "nature methodiz'd", the traditionally accepted method of expression, the rules. Hence, all of these object-oriented critics structured their theories on the elements and fundamentals of the arts, which reflected the reasonableness and regularity of nature.

## IV

The definition of nature and the structure of criticism are basic elements of an object-oriented aesthetic statement. We have seen that nature, for the object-oriented author, is a static, reasonably understandable pheonomenon into which man fits as an integral part. Because the crucial aesthetic mode, beauty, is to be found in nature, it is an unchanging, universal

principle which can be discovered and appreciated because there is in man's basic nature a capacity for learning and the use of reason. Since nature had been observed over the hundreds of years represented by an accumulation of artistic products, and has been systemized into a set of generally accepted rules, critical analysis in the object-oriented perspective tended to judge the arts by the standard of these rules. Within this framework the critic found certain concepts necessary to his analysis--beauty, training, imitation, taste, and the purpose, or definition of art.

Of all the critics considered thus far in this chapter as representative of the object orientation, none had made a truly clear distinction between the aesthetic modes of beauty and sublimity. For the two authors who fitted the sublime into their systems, Dennis and Reynolds, the sublime retained the traditional definition of a style, and a higher mode of beauty. Yet both of these critics were definitely moving in the direction of a theory of the sublime. We will look at Reynolds's ideas closely because his object-oriented criticism was typical of all object-oriented attitudes in this period, and because both of the other orientations had an effect upon his ideas. His Discourses provide excellent material for a study of these influences because they were formal statements of critical system which were delivered at regular intervals over a period of several years. Thus, we can see definite changes

between the first and the last addresses.

Reynolds referred several times in the Discourses to the Sublime style, Grand Gusto, taste, and the Grand Style. Taken in context, all of these refer generally to the same thing, a superior style brought about by the artist's "grand conception."[86] Reynolds did not separate the sublime and the beautiful into aesthetic experiences based on different emotions as his friend Burke had done.[87] Reynolds did show the influence of Burke's theory, however, especially in his discussions of the emotional effects of the virtues and faults of the two giants, Michalangelo and Raphael. We will see that his attitude about these two artists changed over the years as his concept of the sublime matured and as the value he placed on the sublime in art gradually took precedence over the value of beauty.

Reynolds's idea of beauty corresponded to his idea of nature because he felt that the purpose of art was to copy nature, and that beauty resided in nature. For each of Reynolds's definitions of nature, there was a similar definition of beauty; beauty is in the central form; it is in the generic type; it is in the idea in the artist's mind; it is in the nature of mind which appreciates the congruent and the beautiful. Reynolds's idea of the sublime emerged from the combination of the style grand gusto and the "idea" in the artist's mind. The grand gusto moves the passions, fires the imagination; the artist's idea

eventually became an energy in Reynolds's system, similar to Shaftesbury's creative force.

Three representative statements taken from the Discourses over a period of time demonstrate the change in attitude toward the roles and definitions of beauty and sublimity in art. In the first, beauty can be seen to be the leading principle of art; the second passage also praised beauty, but with considerable warmth and emphasis on the fact that it is in the artist's imagination; in the third passage he boldly proclaimed his preference for the sublime.

> This idea of the perfect state of nature, which the artist calls the Ideal Beauty, is the great leading principle, by which the works of genius are created.[88]

> The art which we profess has beauty for its object; this it is our business to discover and to express; but the beauty of which we are in quest is general and intellectual; it is an idea that exists only in the mind; the sight never beheld it nor has the hand expressed it; it is an idea residing in the breast of the artist.[89]

> The sublime in painting, as in Poetry, so overpowers, and takes such a possession of the whole mind, that no room is left for attention, to minute criticism. . . . The correct judgment, the purity of taste, which characterize Raphaelle, [sic] the exquisite grace of Correggio and Parmegiano all disappear before them [ the great ideas of Michelangelo, which are sublime].[90]

Lifted from the context these words seem to indicate that Reynolds contradicted himself; yet, he did not have to admit that there had been a substantial change in his attitude over the years. The sublime was originally submerged as an attribute of beauty since it was contained in the object, and at the same time it was in the idea in

the artist's mind since this was an abstract of the object. When the sublime emerged later as an idea or force in the artist's mind, it could easily be confused with the idea of the abstract, the general.

Beauty, as Reynolds defined it in the first few discourses, is the abstract of nature which is derived from a generalization of all particular forms of physical nature; that abstract is called the central form.[91] Beauty is also a generic type which is more specific than the central form. The Apollo and the Gladiator are generic types; a combination of these forms, along with numerous others--an abstract of all possible types--is the central form.

The potentially dynamic element of Reynolds concept of beauty was the idea which exists in the artist's mind. In the third discourse we see that this "idea" is both the central form and the abstract.

> Thus, it is from a reiterated experience, and a close comparison of the objects in nature, that an artist becomes possessed of the idea of that central form. . . .[92]

Eventually, however, that idea became infused with an energy, which bordered on being a creative force. Reynolds's recognition of the creative power of Michelangelo is seen in the fifth discourse.

> Michaelangelo's works have a strong, peculiar character; they seem to proceed from his own mind entirely, and that mind so rich and abundant, that he never needed, or seemed to disdain, to look abroad for foreign help.[93]

Finally, he wrote of Michelangelo's conception in the last discourse:

> Turn your attention to this exalted Founder and Father of modern Art, of which he was not only the inventor, but which, by the devine energy of his own mind, he carried at once to its highest perfection.[94]

The energy of the artist's mind is beauty in one of its forms, and it is also the emerging idea of the sublime. The concept shows the influence of a subject orientation because of Reynolds's continuing emphasis on the effects produced in the viewer, but it also had an overtone of the creator orientation because of the divinity and the powers of the artist as a creator in his "own mind," independent of "foreign help".

The general tone of the early discourses tells the reader that the principal concern of the artist is to discover beauty in nature and to convey it to the viewer. Beauty is a fixed quality which is discovered by the judgment and reason of the artist, and it is appreciated by the connoisseur in the same manner. This concept is emphatically reiterated in the seventh discourse.

> We will take it for granted that reason is something invariable and fixed in the nature of things . . . whatever goes under the name of taste, which we can fairly bring under the dominion of reason, must be considered as equally exempt from change. If therefore, in the course of this inquiry we can shew that there are rules for the conduct of the artist which are fixed and invariable, it follows, of course, that the art of the connoisseur, or in other words, taste, has likewise invariable principles.[95]

The sublime, on the other hand, is founded on emotion,

and does not flow directly from reason. When the sublime emerged as an important element of Reynolds's criticism, he modified the role of reason saying that it is reason which tells us to give way to emotion.

> Reason, without doubt, must ultimately determine everything at this minute it is required to inform us when that very reason is to give way to feeling. The great end of all those arts is, to make an impression on the imagination and the feeling.[96]

The change from the dominance of reason to the dominance of feeling is clearly seen in the final statement of his preference for the powerful effects on the mind generated by Michaelangelo's art. At the beginning of his critical career Reynolds was ambivalent about the relative merits of Raphel and Michelangelo, but expressed a reserved preference for the former, probably because the traditional taste preferred his elegant beauty.[97] In critical terms Raphael stood for the classical adherence to the rules, the use of judgment and the representation of beauty. Although the idea of sublimity had been applied to both artists when the sublime was thought to have been a superior beauty, Michelangelo gradually came to represent the idea of sublimity, great faults, and the particular and personal statement over the general idea.[98]

Thus it was that Reynolds's idea of beauty, founded on a rational, invariable principle of nature, discovered by the artist's reason, clearly an object-oriented interpretation, gradually took on nuances of the subject and

creator orientations. Yet, the total impact of the Discourses does not suffer from the change, for Reynolds still believed the artist's training through experience, his contact with a nature characterized by fixed and invariable principles, and his knowledge of other artists' work would produce a superior art. And he still used the same critical vocabulary in the nineties that he had used in the fifties; the difference lies in the emphasis and subtle changes in definitions. The third stage of the artist's development was the phase that Reynolds dwelt on for the twenty-one years he addressed the Academy; his final statement is similar to the original passage in the third discourse where he had introduced the program.

> When the student has been habituated to that grand conception of the Art, when the relish for this style is established, makes a part himself, and is woven into his mind, he will by this time, have got a power of selecting from whatever occurs in nature that is grand, and corresponds with that taste which he has now acquired.[99]

Dennis, who also spoke of the sublime, found it in the object, which is actually in the nature of things--an underlying truth or pattern--and in the style, or the artistic representation of that truth in nature. In the Advancement Dennis tells us that the sublime is an element in the art which produces an emotion in the audience.

> Thus we have shewn, that Enthusiasm flows from the Thoughts, and consequently, form the Subject from which the Thoughts proceed. . . . Now no subject is so capable of supplying us with Thoughts that necessarily produce these great and strong Enthusiasms, as a Religious Subject.[100]

Several emotions are given which arise from the sublime subject, and these are more powerful than ordinary emotions- they are called enthusiasm.

> For all which is great in Religion, is most exalted and amazing; all that is joyful, is transporting; all that is sad, is dismal; and all that is terrible, is astonishing.[101]

The fact that there was a distinction made between ordinary emotion and aesthetic emotion led Monk to state that Dennis's treatise contained the earliest theory of the sublime in England.[102] Dennis attempted to discover what it is in the art that leads to an emotional reaction in the viewer; he looked for that principle in the subject matter rather than in a general principle in the mind as Burke was to do years later.

Monk writes that Dennis was definitely out of harmony with the prevailing temperment of his time with regard to the convention of poetry because of his strong emphasis on the emotional rather than the intellectual content of poetry.[103] Yet, Dennis never clearly distinguished between the beautiful and the sublime in terms of the origin of those emotions in a principle of human nature, or in terms of aesthetic modes or qualities; the sublime was actually the highest beauty and therefore caused the greatest emotions.[104] All beauty for Dennis is founded in nature, and it is characterized by regularity, rule, and harmony.[105] It is dependent on the rules of art which arise from the observations of nature and the sacred

subjects inherent in nature. In the Grounds of Criticism in Poetry he wrote,

> Since therefore 'tis for want of knowing by what Rules they ought to proceed, that Poetry is fallen so low, it follows then that it is by the laying down of those Rules alone, that can reestablish it. . . . Besides, the work of every reasonable Creature must derive its Beauty from Regularity; for Reason is Rule and Order, and nothing can be irregular either in our Conceptions or in our Actions, any further than it swerves from Rule, that is, from Reason.[106]

This cosmological aesthetic system Dennis had devised demanded that man discover God's law and follow it in behavior and in art.

> As Man is the more perfect, the more he resembles his Creator; the Works of Man must needs be more perfect, the more they resemble his Maker's. Now the Works of Man, tho infinitely various, are extremely regular.[107]

The emerging concept of the sublime in aesthetics apparently had a considerable effect on the criticism of Reynolds and Dennis. While beauty was the mode which was traditionally discovered by the poet and artist in nature, the sublime, because of its implications of feeling and great emotion, turned the critic's attention to the nature of the mind and its capacity to be affected by art. Both Reynolds and Dennis, however, adhered to the classicist's position that the goal of art is to mirror true nature, and not to reflect the artist's personal concept of it. A truly subject-oriented position takes the artist's distortion of nature into consideration since his impressions are peculiar to the association he has built up in his

experiences. The distortions of Michelangelo's mind which contained the energy Reynolds wrote of contain an element of a subject-oriented perspective, but Reynolds's system could not support any further development of the idea without becoming very eclectic and disorganized. Dennis emphasized the subjective character of emotions, yet retained the classical object-oriented view that art is based on an unalterable principle in nature.

Beauty as a discernable principle in nature was an important aesthetic mode for the other critics mentioned in this chapter. Although Pope and Johnson had little to say about beauty per se, it was implicit in their criticism. Johnson's concept of the general as opposed to the particular is identical to that of Reynolds. In Rasselas Johnson's hero says that the artist is not to enumerate the stripes of the tulip, but to convey the idea, the beauty of it in a general description.

> The business of a poet, said Imlac, is to examine not the individual, but the species; he does not number the streaks of the tulip, nor describe the different shades of the verdure of the forest.[108]

General human nature was of much more concern to Johnson than general physical nature. His opinions of art, beauty, and nature are integrally tied to his conceptions of truth, virtue, and the final goal of art, to instruct by pleasing. To search for solid statements about beauty in art or in nature leads the reader back to virue, human nature, and the idea that man tends to be influenced by

what he observes in nature and the arts. In an essay on fiction he wrote:

> It is justly considered as the greatest excellency of art, to imitate nature; but it is necessary to distinguish those parts of nature, which are the most proper for imitation: greater care is still required in representing life, which is so often discolored by passion, or deformed by wickedness.[109]

Beauty, then, is the potential of nature, and not the actualization of it. Deformities are not only wickedness and certain passions, they are also the particular habits and customs that mark groups of men.

The truth and beauty in nature is the general pattern of behavior in its most virtuous aspects. In his criticism of Shakespeare, Johnson wrote that this poet had bypassed the particular in favor of the general in nature. Johnson also criticized Shakespeare for too much unnecessary wickedness and vice: "he sacrifices virtue to convenience, and is so much more careful to please than to instruct."[110]

Johnson was aware of the newly emerging principle of the sublime as a distinct experience from beauty. His familiarity with his friend Burke's publication is reflected in Rasselas:

> Whatever is beautiful, and whatever is dreadful, must be familiar to his [the artist's] imagination: he must be conversant with all that is awfully vast, or elegantly little.[111]

However, this refinement had little effect on Johnson's critical attitude toward beauty and sublimity as distinct aesthetic modes. His attention was focused on truth,

nature, and virtue into which both of these qualities were submerged as one. The emphasis on virtue and instruction laid a great responsibility upon the poet: he was expected to be familiar with all of nature and "modes of life," his character was to be an interpretator of nature and a legislator of mankind.[112]

Like Johnson, Pope thought of beauty in terms of nature and the art which was to mirror it; and like him also, he made no real distinction between the aesthetic modes of beauty and sublimity. Pope was influenced by Longinus through Boileau.[113] But that source had a very different effect on Pope's criticism than it had on Dennis's Dennis made the issue of the emotional and religious experiences central to his criticism; Pope made wit, naturalness, ease of expression and thought central to his criticism. Pope was interested mainly in style--the art of poetry--as it was reflected by the models of the ancients: Dennis was interested in the most beautiful--sublime--as it was reflected in the subject matter of the ancients. Beauty indeed existed in nature for Pope, but the specific methods for the expression of beauty are the focal point in much of his critical material because he emphasized the idea of ordering nature in art. Nature as it appears to the naive observer is unorganized, and realizes its reasonable potential only in the expression of the artist: "True Wit is Nature to advantage dress'd; what oft was thought but ne'r so well express'd."[114] The "beauties" and "graces"

of the arts are, for the most part, expressed by the artist through the use of rules and examples set in the past; only on occasion may the artist step over the limits established by tradition.

The pattern of nature, regularity, that Pope advised the artist to represent is to be discovered by the study of the great examples of art, an opinion similar to Reynolds's. Reynolds placed a strong emphasis on the direct observation of nature; Johnson stressed direct observation even more strongly than Reynolds. In all three of these sub-modes of the object orientation the artist must look to nature through the eyes of a number of men, great artists, tradition, the consensus gentium.

The word sublime had also entered the vocabulary of Jonathan Richardson. He wrote that the word was a "wild term" and he wished to tame it; his definition was almost identical to Dennis's, that is, the highest beauty.[115] He also used the sublime to indicate a style as Longinus had,[116] and wrote of a sublime language.[117] Richardson, then, did not stray from the traditional idea of beauty; and like others early in the century merely added a new word to his critical vocabulary, not a new concept. Besides sublime, Richardson used grace and greatness to mean degrees of beauty; neither is clearly defined, although many pages are devoted to their place in art.[118]

An object-oriented concept of nature, art, and beauty

seems to have come very easily to music critics because the fundamentals of that art are almost a mathematical science. Since the time of Pythagoros the laws of music appeared to have been established in the natural order of things. It remained for the artist-musician only to discover the laws of harmony, melody, and consonance and to apply them to tonal compositions. Charles Avison and Dr. Charles Burney both had an object-oriented concept of beauty and nature. Avison had indeed adopted the idea of an internal sense which apprecaites the arts, but his definition of beauty, the aesthetic mode which drew his attention, depended on the science of harmony and the integration of melody with it. Harmony is equated with geometry and gives beauty to the composition.[119] Burney fully concurred: music is an expression of the order of the universe by means of its very nature, that is, a science of ratios which are fixed principles. The ratios are not invented by man; they exist, and are discovered by him.

> Harmony seems a part of nature, much as light or heat; and to number any one of them among human inventions would be equally absurd. . . . The ancients by experiments on a single string, or monochord, found out the relations and proportions of one sound to another; but the moderns have lately discovered that nature . . . had arranged and settled all these proportions in such a manner, that a single sound appears to be composed of the most perfect harmonies. . . .[120]

The appeal of musical beauty is explained in terms Reynolds and Johnson would have approved of.

> Indeed nature seems to have furnished human industry with the principles of all science; for what is Geometry, but the study of those proportions by which the world is governed.[121]

Human nature is endowed with a principle which appreciates the beauty of nature and of the arts.

> The love of lengthened tones and modulated sounds, different from those of speech, and regulated by a stated measure, seems a passion implanted in human nature.[122]

Burney made no attempt to explore the possibilities of an internal aesthetic sense or a psychological principle which operates in response to the sound.

Hogarth's understanding of the beauties of nature was very similar to that of the musicians just discussed. The principle of the "S" surve which is observed in nature is infinitely beautiful; it is a scientific endeavour to discover evidences of it in natural objects just as the geometrician discovers natural relationships, and the musician discovers harmonic relationships. Again, human nature is so comprised that the appreciation of the beautiful is natural. Hogarth offered the illustrations in his Analysis in order that the reader might have a clue as to what to look for in nature.

> I am persuaded that when the examples in nature, referr'd to in this essay, are duly considered and examined upon the principles laid down in it, it will be thought worthy of a careful and attentive perusal: and the prints themselves too will . . . be examined as attentively, when it is found that almost every figure in them . . . is refer'd to singly in the essay, in order to assist the reader's imagination, when the original examples in art, or nature, are not themselves before him.[123]

In all of these critical examples beauty was the important aesthetic quality; for most of these writers, the consideration of the sublime was almost non-existent, and for some, beauty was hardly mentioned apart from the ideas of nature and the natural. The sublime was mentioned by Reynolds, Johnson, Dennis, and Richardson. Of these, only the first two saw it in the light of a distinct aesthetic mode, and neither incorporated it into his system. Dennis linked the sublime with great emotion, but called it a higher beauty. Richardson identified the sublime as the highest beauty.

## V

Nature and beauty were integrally related concepts for the object-oriented perspective. Imitation, invention, and genius were likewise inseparable ingredients of this critical mode. We need to look now at the definitions of invention and imitation since they are the means whereby a genius makes art. Both terms had several critical meanings in the eighteenth century. Imitation meant both a literal copy of nature or of art, and a copy of the general idea of nature and of art. Usually imitation implied an application of time-tested rules of art. Invention also implied the use of traditional methods of rule and observation. There were various modifications of the meanings of these terms from critic to critic: let us look at some of these.

In writing of the means of producing good art invention (and conception) and imitation were used fairly frequently. The meanings of both were very similar and had a positive connotation. Imitation as a means of artistic expression had been discussed and promoted by critics from the time of Aristotle's Poetics. The rationale for imitation was provided by Aristotle on the assumption that it is man's nature to imitate as a natural learning process; thus, he is pleased with it in the imitative arts.

> Poetry in general seems to have sprung from two causes, each of them lying deep in our nature. First, the instinct of imitation is implanted in man from childhood, one difference between him and the other animals being that he is the most imitative of all living creatures, and through imitation learns his earliest lessons, and no less universal is the pleasure felt in things imitated.[124]

Since imitation is the major means of art, the closer the copy is to the original, the more the mind will be pleased with it.[125]

Wittkower has discovered four modes of imitation which had been developed by critics up to the end of the eighteenth century: (1) direct imitation, (2) imitation of parts, (3) imitation of the masters, and (4) imitation of the artist's imagination.[126] The "direct imitation of nature" is what Johnson called "imitation" and Reynolds called "copying" and "imitation in the vulgar sense."[127] Direct imitation posed the question of what nature is; Raphael, Girgonie, Leonardo, and Giotto were all said to have followed nature. Yet each saw it in a different light.

Direct imitation also suggested an exact imitation of nature as it is experienced by the senses; such a procedure was almost always condemned. Imitation of other artists, Wittkower's second mode, as we shall see, was condemned by Johnson and condoned by Reynolds. The third mode, imitation of the parts of nature, is a very broad category which includes the physical parts referred to by Hogarth as the "S" curves, the new combinations referred to by Johnson and Pope, Pope's "nature to advantage dress'd," and Reynolds's central form. This is the mode of imitation to which most object-oriented critics referred. Finally, Wittkower's fourth mode, imitation of the imagination of the artist, is an idea that appeared in Reynolds's fifteenth discourse, as well as in Blake's and Shaftesbury's criticisms. It conveys an idea of a certain power which the artist draws upon in the place of external nature. We will look particularly at the uses of imitation as it was used by Reynolds, Pope, and Johnson.

Copying is a term closely related to imitation and invention; it was used with both a positive and a negative intent. The term was used by Reynolds to indicate an exact replication of what the artist sees in nature or in art; it is to be very carefully employed by the artist for training purposes only. In learning the uses of color, copying is almost useless because of color deterioration in older paintings.

> The great use of copying, if it is at all useful, should seem to be in learning to colour; yet even colouring will never be perfectly attained by servilely copying the model before you. . . . By close inspection, and minute examination, you will discover, at least, the manner of handling . . . and other expedients . . . by which nature has been so happily imitated.
>
> Old pictures are often changed by dirt and varnish. . . . An exact imitation, therefore, of those pictures, is likely to fill the student's mind with false opinion.[128]

On the other hand, copying can serve a valuable function in the training of the artist. Reynolds saw the growth of the artist's ability taking place in three stages: acquisition of basic skills in drawing, modeling, use of colors--skills which he compared to grammar in literature; study of the stock of ideas which has been amassed to his time through familiarity with great works of art; and a final stage in which he must depend upon his own reason and judgment, going beyond the examples of the past. Copying is valuable to the training of the artist in the second stage of his education. Yet, even at this point, only select parts should be chosen for future reference.[129] Reynolds's own use of this practice, which he called borrowing in some cases, can be seen in several of his compositions where an attitude or a pose was taken from a familiar painting and adapted for his own composition. His use of this technique has been the subject of much controversy.[130]

In music, copying was reserved for the performances

of written music: the performer literaly copies in sound what appears in symbol. Avison dealt with this aspect of music in a section of expression in performance.[131] Copying in the sense of representation of natural sounds, such as Vivaldi's imitation of a dog and other things in the Seasons,[132] and representation of the meanings of symbols (words) were both condemned.[133]

Servile copying obviously had no place in literature. On some occasions imitation was used by Johnson in much the same sense that Reynolds used copying. On other occasions he used the word in a technical sense to indicate an artistic mirroring of general nature. In the Preface to Shakespeare Johnson referred to drama as imitations which produce pain and pleasure.[134] He also employed the term in a third context as a critical word applied to the use of certain generic forms of literature such as ode, satire, and pindaric. His dictionary definition of this third application calls it a "translation looser than paraphrase in which modern examples are used for ancient, or domestic for foreign."[135] Pope's historical section of the Essay on Criticism is an imitation of Boileau by this definition.

Generally, however, Johnson had a negative attitude toward imitation--it was often employed as an antonym of invention. He did not approve of the imitation of the ancients in style, form, or content. Ilmac says, "I soon found that no man was ever great by imitation."[136] On

another occasion Johnson wrote, "no man yet ever became great by imitation." In this instance he was examining the necessity of studying the examples of the past, a task which is necessary for the advancement of the arts, but which must be undertaken with the understanding that "invention," not "imitation," is the means of the artist.[137]

If invention and not imitation is to be the artist's method, the meaning of invention must have been clearly identified in the mind of this eminent lexicographer. Upon close examination we see that he applied the term in the same sense that Reynods used imitation and grand conception and that Pope used invention. Invention is first of all rooted in nature. It is the ability to generalize from human behavior and devise a probable series of events and a probable dialogue to accompany it.

> Among the powers that must conduce to constitute a poet, the first and most valuable is invention, and of the degrees of invention, the highest seems to be that which is able to produce a series of events . . . to strike out the first hints of a new fable; hence to introduce a set of characters so diversified in their several passions and interests that from the clashing of this variety may result many necessary incidents; to make these incidents surprising, yet natural . . . .[138]

Another "degree" of invention, also rooted in nature, is the ability to make characters speak and act as one would expect persons in similar situations to behave, in other words, to depict general nature.

> Shakespeare has no heroes; his scenes are occupied only by men, who act and speak as the reader thinks he should himself have spoken or acted on the same

> occasion. It may be said that he has not only shown human nature as it acts in real exigencies, but as it would be found in trials to which it cannot be exposed.[139]

In these examples an astute observation of nature is implicit in the meaning of invention. Also implicit is the familarity with works of the past; the poet must not waste time with things that have already have been done. In Rambler essay Johnson compared the poet with the scientist who must know what has been tried in order to improve upon and build his art. The prominant feature of invention, however, is newness.

> No man even became great by imitation. Whatever hopes for the veneration of mankind must have invention in the design or in the execution; either the effect itself must be new, or the means by which it is produced.[140]

By newness Johnson did not mean the invention of something from nothing. The artist must have the materials of experience in his mind, that is, works of other artists and a familarity with general and particular nature. Newness is the development of unique situations and accompanying interaction. The example of Shakespeare's new use of old stories illustrates Johnson's idea.

> It is easy when the thread of the story is once drawn to diversify it. To tell over and over again a story that has been told already and to tell it better than the first author is no rare qualification; but to strike out the first hints of a new fable . . . is the utmost effort of the human mind.[141]

Newness applied also to the ability to offer variation of a familiar topic, and to use an established artistic form or

genre in a pleasantly unusual manner.

> He [Pope] had invention, by which new trains of events are formed and new scenes of imagrey displayed, as in the Rape of the Lock, and by which extrinsick and adventitious embelishments are connected with a known subject, as in the Essay on Criticism.142

It has already been noted that Pope used the word invention in the sense of to discover. The discovery is similar to one of Johnson's meanings, the realization of general nature.

Imitation was such an important concept to Reynolds that he devoted the entirety of two discourses to its definitions and principles. Three different meanings were indicated by Reynolds: (1) imitation of general nature, that is, the parts of nature, (2) imitation of other artists, and (3) imitation of the imagination of the artist. In the third discourse he addressed the technique of the imitation of general nature; in the sixth he wrote of the imitation of other painters; and in the fifteenth he mentioned the very radical idea of imitation of the artist's own (and hence, very personal) imagination. Only the first and second modes of imitation are a part of his critical system; the third mode is an eclectic idea which is not supported by his theory of the central form and general nature. Thus, he wrote of imitation in the "larger" sense and in the "narrower" sense--imitation of the general and of the particular.

> Let it be observed, that a painter must not only be of necessity an imitator of the works of nature,

> which is alone sufficient to dispel the phantom of inspiration, but he must be as necessarily an imitator of the works of other painters; this appears more humiliating, but is equally true; and no man can be an artist, whatever he may suppose, upon any other terms.[143]

In the "larger sense" imitation is an artistic rendering of general nature; it is this imitation which is the topic of the sixth discourse. The term invention was employed in the second, and again in the sixth discourse as the larger sense of imitation. The fact that Reynolds did not consistently use one word can possibly be attributed to stylistic variation; it can possible be attributed to the unsettled meaning of these critical terms. Reynolds's definition of invention was similar to Johnson's.

> Invention, strictly speaking, is little more than a new combination of those images which have been previously gathered and deposited in the memory; nothing can come of nothing; he who has laid up no materials, can produce no combinations.[144]

Art is not brought about by inspiration; it is the result of long years of work and study.[145] Since it is the business of the artist to depict beauty, and beauty is not to be found in particular nature, the artist cannot copy what he sees. He must generalize from his visual experience to arrive at the central form. In doing this his artistic process is similar to the one described by Johnson: he generalizes from experience to arrive at something which the eye never has seen, something which is possible, but not probable. The character of his imitation is a little different from Johnson's invention, however,

for it is the excellencies of nature that Reynolds emphasized, not newness in art.

> I will now add that Nature herself is not to be too closely copied. There are excellencies in the art of painting beyond what is commonly called the imitation of nature.[146]

To Reynolds the excellencies and the generalities of nature were the same thing; they are both called beauty (the central form). They are understood by the artist through experience and the use of reason and judgment.

An aid to the artist in discerning the beauties of nature is the work left by acknowledged masters of the art. Imitation was advised in its second sense of reference to other artists. For the artist has a set of rules by their example--a short cut to beauty. This mode of imitation is one of the four discussed by Wittkower. Reynolds seems to have meant both the imitation of art and of imagination. His tone in his advice to imitate other artists is an indication of the value he placed on this kind of imitation.

> Invention is one of the great marks of genius; but if we consult experience, we shall find, that it is by being conversant with the inventions of others, that we learn to invent; as by reading the thoughts of others we learn to think.[147]

Invention and imitation, in the sense of combining particulars to discover the general and make new combinations of materials, were important concepts in the subject-oriented attitudes of Pope, Reynolds, Johnson, and others. This attitude toward the process of artistic "invention" was characteristic of the object orientation because the

artist had to rely upon the empirical evidence in order to discover the nature of beauty. The short cut of rules and the understanding of the universality of taste based on a fixed standard of beauty was accepted by all object-oriented critics, even Johnson. Rules signified the rational basis of art, which was founded on the regularity of nature, and the rational nature of man, who could discover and codify that regularity. Familiarity with the rules, genres, technical skills and that elusive ability to invent characterized artistic genius for these critics. Let us look at genius in this context of the application of rules.

## VI

Dennis believed fully in the value of the rules; one of his treatises, The Advancement and Reformation of Poetry, proposed to reestablish and improve art through the application of the rules which he said has been neglected. His high regard for the established rules permeated his works and gave them a distinctive character. He wrote on one occasion:

> The necessity of observing the Rules, to the Attaining a Perfection in Poetry, is so apparent, that he who will give himself the Trouble of Reflecting, cannot easily doubt it. Rules are necessary in all the inferior Arts, as in Painting and Musick.[148]

The rules are discovered through reason and are totally binding on art.

> Poetry, which is an imitation of Nature . . . can neither have Greatness nor Real Beauty, if it swerves from the Laws which Reason severely prescribes it.[149]

Rules are connected to the moral responsibility of art, and prescribe the use of religious topics. Dennis in his cosmological aesthetic, drew a parallel between rule and sacred subjects; he wrote, "writing Regularly, is writing Morally, Decently, Justly, Naturally, Reasonably."[150] Thus are rules and subject commonly identified. The fact that the ancients produced better art than the moderns cannot be attributed to any advantage other than the subjects they have treated.

> The Writers, who surpass others in the same kinds of writings must do it from some internal of external Advantage, or from the Subject itself. I shall endeavour to shew in the Two following Chapters, that the Ancients could not derive their Pre-eminance from any internal of external Advantage, and afterwards we shall proceed to examine whether they deriv'd it from the Subjects they treated of.[151]

Of course, we see that the sacred subject matter of ancient literature assured its superiority.

Reynolds's attitude toward rules was more liberal than was Dennis's. Like Johnson and Pope, he felt that there was a point from which the artist could add to the pool of knowledge; this is the creation of new rules through the discovery of new combinations. Genius, for Reynolds, was founded on the rules. The use of rules in the first two stages of the artist's training is obvious. At the third stage of his development, the artist's imagination can

exercise its own power, for the rules have become internalized as an automatic discipline, and the habits of good taste and observation of nature provide him the foundation for invention.[152]

Johnson thought that the artist should assume a greater responsibility for his own judgment and rely on the rules only if they served his purpose. This is a very rational approach to art, for the artist's own reasoning power is superior to any rules. He wrote in the Rambler,

> Every new genius produces some innovation, which, when invented and improved, subverts the rules, which the practice of foregoing authors had established.[153]

For Johnson rules did not signify general beauty as they did for Reynolds, but instead they held the implication of particular taste which has accrued to the tradition of literary forms, such as the drama. The artist must transcend this particular in order to express the general, and in so doing he may see fit to break these expressions of particular taste which have been accepted by his society.

> He must divest himself of the prejudices of his age and country; he must consider right and wrong in their abstracted and invariable state; he must disregard present laws and opinions, and rise to general and transcendental truths, which will always be the same.[154]

Several rules in particular, which applied to the drama, received Johnson's attention because they did not conform to reason. In defense of Shakespeare he wrote that the playwright was actually closer to nature and truth when he ignored conventions concerning the unities of time and

place. Commenting on the development of the conventional forms of comedy and tragedy, Johnson noted that these forms are not mandatory guides for the poet; they emerged as separate styles and are not inherent in nature. In combining the two, Shakespeare is the true witness of nature.

> Almost all his plays are divided between serious and ludicrous characters, and, in the successive evolutions of the design, sometimes produce seriousness and sorrow, and sometimes levity and laughter. That this practice is contrary to the rules of criticism will be readily allowed; but there is always an appeal open from criticism to nature.[155]

Art forms, wrote Johnson, are artificial, and in this opinion he found support for a disavowal of certain rules, and support for others. The genius in his "inventions" from nature seeks higher truths than opinions and customs. Custom had set the standard for drama in the unities; the traditional support of the unities was an appeal to the possible. Ideally an action should take no longer to perform than it would take place in life; thus a "reasonable" limit of twenty-four hours was determined to be the absolute limit for the action of a play to represent. The audience was not expected to believe that those dramatic characters could be transformed from one great distance to another, or that several days, weeks, or months could be squeezed into a couple of hours; thus, the action traditionally had to take place in one setting. Johnson felt that the artificiality of the art form does not fool the audience one minute, and hence the limitations of the imagination

and probability, rather than time and place, are the artist's guide for dramatic action.

> The truth is that the spectators are always in their senses and know, from the first act to the last, that the stage is only a stage, and that the players are only players.[156]

If the story in the artist's conception requires a lengthy time span, or movement from place to place, it is the artist's privilege to break with conventions. In this respect Johnson went beyond as a mirror of nature as it should be, to nature as it could be.

The artificiality of art forms also supported other conventions. These are the necessities of the genres in order that their purposes be attained. Different rules exist for different forms. The drama, for example, must have a unified action;[157] the biography demands that particularities of the individual be given;[158] letter-writing had its necessary form.[159] For someone who was so critical of rules Johnson could descend into the particulars of them very easily. Writing on versification he said of the caesura, or pause in his criticism of Milton,

> It may be, I think, established as a rule, that a pause which concludes a period should be made for the most part upon a strong syllable, as the fourth and sixth: but those pauses which only suspend the sense may be placed upon the weaker.[160]

Each of these object-oriented critics, then, discussed the fundamentals of the arts in their criticisms. They wrote about the arts in terms of structure, subject, composition, and form, rather than in terms of processes of physical

reaction to it. We will see now that genius was also defined in terms of a rational and "regular" form of expression.

## VII

Attitudes about the nature of artistic genius are closely allied to the identification of the goals of art and the means of attaining them. Since art was seen to be a copy of something in nature and was based on a universally observable principle, an artist could be trained to identify that principle, usually beauty, and be trained as well to duplicate it. All of the writers thus far considered, with the exception of Hogarth, were willing, however, to admit that there is something in great art, an unidentifiable *je ne scai quoi*, which cannot be rendered by everyone who is so trained in the arts. Hogarth mentioned the *je ne scai quoi*, called it the sublime part, and went on to announce that he had identified it in the "S" line.[161] Johnson thought the great artist possessed a greater ability that the average person, but that a person of "superior parts" could excel equally in any "science." Pope spoke of a "grace beyond the reach of art," and Jonathan Richardson mentioned grace and greatness in a context which equated them with that unknown quality.

Reynolds identified two distinct modes of genius, that of mechanical performance and a broader category of genius which is capable of conceiving as a poet or as a painter.[162]

Without the mechanical skills, the genius in the poetic sense is just a man with good taste.[163] The skills of execution are particular to poetry, painting, music, criticism, and each of the liberal arts. On this point Reynolds's opinion is very different from Johnson's, for Johnson believed that a man of superior talents could excel in any of the arts. Reynolds's thinking on this issue was not substantiated by his general critical system, as was his friend's. According to Reynolds, human nature is characterized by an ability to order life by reason; all the arts are based on reason and experience; thus, the artist should be able to express his genius in any medium in which he has been trained.

The idea that genius is specialized is reinforced by Reynolds's genre theory; each artist has a capacity for expression in certain genres only, and he should not only be aware of his limitations, but he should also restrict his work to the highest genre his talents will allow. Throughout his writing career Reynolds mentioned this theme, pointing to the works of Loraine, Canaletto, Dürer, and others. The fourteenth discourse was devoted to an examination of Gainsborough's genius and limitations.[164] He felt his own genius was a little short of that required by the historical genre, and above that of face painting. Thus, his own highest potential was historical portraiture, which he called the composite style,[165] and upon which he modeled most of his own work.

Johnson's genius was no less rational than Reynolds's even though he was critical of the rules. His definition of genius was similar in substance to Reynolds's, although his rationale was very differently phrased. They both felt that genius was expressed differently at different times and circumstances. Reynolds said:

> But the truth is that the degree of excellence which proclaims genius is different, in different times and different places; and what shews it to be so is, that mankind have often changed their opinion upon this matter [beauty].[166]

Johnson said in reference to Shakespeare;

> Every man's performances, to be rightly estimated, must be compared with the state of the age in which he lived and with his own particular opportunities.[167]

The basis for these statements was not the inconsistency of the arts, but rather the conventionalities of them--custom, habit, and particular taste--as well as a belief that these can inhibit the progress of the arts. It is not genius which is inconsistent, for that is a general attribute, but rather the circumstances which are conducive to genius. The genius is limited by his circumstances and his opportunities, and his ability to observe general nature. The substantial difference between these two men on this matter was Johnson's belief that genius was of a more general nature, and that a man is limited by circumstance and not particular bent. Johnson himself was a writer by chance; and by inference, Reynolds was a painter and not a musician, a portraitist and not an historical painter

by the same quirk of fate.

> One man has more mind than another, He may direct it differently . . . I am persuaded that, had Sir Issac Newton applied to poetry, he would have made a fine epic poem. I could as easily apply to law as to tragic poetry . . . I had not the money to study law.[168]

Pope wrote of the nature of genius in the same general terms as Johnson and Reynolds. The two necessary ingredients are observation of nature and invention. Both are founded on the consistency of nature, man's ability to discover it, and his need to codify and follow it. A clear distinction was made by Pope between two different modes of genius; although both are dependent upon the observation of nature for their success, the inventive genius of Homer is seemingly preferred to the judgmental genuus of Virgil.

> No Author or Man ever excell'd all the World in more than one Faculty, and as Homer has done this in Invention, Virgil, has in Judgment. Not to think that we are to think Homer wanted Judgement, because Virgil had it in a more eminent degree; or that Virgil wanted Invention, because Homer possessed a larger share of it: Each of these great Authors had more of both than perhaps any man besides, and are only said to have less in Comparison with one another. Homer was the greater Genius, Virgil the better Artist.[169]

Here Pope wrote of the two requirements of genius which were repeated by Reynolds and Johnson, judgment and invention. Pope's preferences for the invention of Homer over the judgment of Virgil is an expression of critical prejudice in favor of Homer, and an evidence of the maturity of his

critical ideas between the time of his Essay on Criticism and the translation of Homer.[170]

Intrusions upon a classicist confidence in order, rule, and the heavenly harmony can be detected in all but one of the object-oriented critics surveyed in this chapter. Hogarth alone was absolutely sure of an ordered art dependent upon reason for its expression. Into the writings of all the others crept a subjectivism in the guise of one or another concern: for Dennis it was the supreme feeling of the sublime; for Pope it was the artistic freedom of poetic license; for Johnson it was an admiration for the great non-regular poet Shakespeare and an interest in human nature; for Reynolds it was an idea of the sublime distinct from beauty and a reluctant awareness of the ensuing implications; for Avison it was a feeling of the power of music. Each of these critics expressed in some form or another certain aspects of a new asesthetic attitude--the full realization of which can be seen in the subject-orientation.

## FOOTNOTES TO CHAPTER III

[1]John Dennis, Critical Works, 2 vols., ed. Edward Niles Hooker (Baltimore: John Hopkins Press, 1939), 1:202.

[2]Ibid., p. 202.

[3]See especially Charles Avison; An Essay on Musical Expression (New York: Broude Brothers, 1967; a facsimilie of the 1753 London edition).

[4]Edward E. Lowinsky, "Taste, Style, and Ideology in Eighteenth-Century Music," in Aspects of the Eighteenth Century, ed. Earl R. Wasserman (Baltimore: John Hopkins Press, 1965), pp. 179-185. Lowinsky traces an intellectual connection between Leibniz and Bach.

[5]Avison, pp. 39-40, 51n, 52-54n. Lowinsky discusses the stylistic differences between the Baroque and the Rococo in music in terms that can be understood by the non-musician (pp. 163-206).

[6]Sir Joshua Reynolds, Discourses on Art, ed. Robert Wark (Huntington, Cal.: Henry E. Huntington Library and Art Gallery, 1959; reprint ed. New York: Collier Books, 1966), Discourse VII, p. 160; unless otherwise noted, references in this chapter are to this edition; hereafter cited as Reynolds with discourse number and page reference.

[7]Wylie Sypher, Four Stages of Renaissance Style: Transformations in Art and Literature, 1400-1700 (New York: Doubleday, 1955). Sypher discusses the Mannerist, Baroque, and Rococo elements of these poets.

[8]I am using Sypher's criteria for calling Shakespeare and Milton Mannerist and Baroque.

[9]A. O. Lovejoy, "Nature as an Aesthitic Norm," in Essays in the History of Ideas (Baltimore: Johns Hopkins Press, 1948), pp. 69-77. See also Basil Willey, "Nature in Literary Theory," in The Eighteenth-Century Background: Studies in the Idea of Nature of the Period (London: Chatto and Wildus, 1940; reprint ed., Boston: Beacon Press, 1961), pp. 18-26.

[10]Samuel Johnson, Dictionary of the English Language, 2 vols. (London, 1755).

[11]Rene Wellek, A History of Modern Criticism, 4 vols. vol. 1: The Later Eighteenth Century (New Haven and London: Yale University Press, 1955), 1:107-109.

[12]William Hogarth, Analysis of Beauty, ed. Joseph Burke (Oxford: at the Clarendon Press, 1955), p. 51. Hogarth referred specifically to the ram's head p. 69, to the pineapple, p. 41, and to other forms throughout the work.

[13]Ibid., p. 54.

[14]Ibid., p. 27.

[15]Ibid., p. 27.

[16]Ibid., pp. 66-67.

[17]Hogarth's attitude toward human nature can be detected in most of his art work--especially in his social satires The Rake's Progress, Gin Lane, Marriage a la Mode, and others.

[18]R. Wittkower, "Imitation, Eclecticism, and Genius," in Aspects of the Eighteenth Century, ed. Earl R. Wasserman (Baltimore: Johns Hopkins Press, 1965), p. 147.

[19]Reynolds, VII, p. 147.

[20]The portraitist, like the biographer, must resort to the particular in order to express his intent.

[21]Reynolds, VII, p. 123. Reynolds's use of the concept of secondary truth, and from it the implication of a primary truth, is the "current coin" he inherited from Locke and Addison.

[22]Roger Fry, ed. Discourses Delivered to the Students of the Royal Academy, by Sir Joshua Reynolds (London: Dutton, 1905), pp. 43-44. Fry points to these three uses of "nature" in his introduction to Discourse III.

[23]This outline was adapted with some modifications from my thesis; empirical nature was understood by Reynolds to mean all the individual things we see as well as particular customs and habits. Barbara Kerr Scott, "The Evolution of Concepts Found in the Discourses on Art of the First President of the Royal Academy" (Master's thesis, University of Oklahoma, 1970).

[24]Reynolds, VII, p. 122.

[25]Ibid., VII, p. 122.

[26]Samuel Johnson, The Yale Edition of the Works of Samuel Johnson, ed. Herman W. Leibert, et al., 9 vols.; vol. 2: Idler and Adventurer, eds. Walter J. Bate, John M. Bullitt, and L. F. Powell; vols. 3-5: The Rambler, ed. Walter J. Bate and Albrecht B. Strauss; vols. 7-8: Johnson on Shakespeare, ed. Arthur Sherbo (New Haven and London: Yale University Press, 1958- ), 2:255 [attributed to Reynolds].

[27]Reynolds, III, pp. 47-48.

[28]Ibid., III, p. 48.

[29][Reynolds], Idler, p. 257.

[30]Reynolds, IX, p. 151.

[31]Ibid., IV, p. 65.

[32]Ibid., XIII, p. 209. A general discussion about the artificial forms of the arts, similar to Johnson's ideas, is taken up in pages 205-209. See infra on Johnson.

[33]Ibid., VII, p. 113, and XIII, p. 204.

[34]Ibid., VII, p. 105.

[35]Ibid., VII, p. 117, cf. Edmund Burke, "On Taste," introductory essay to A Philosophical Inquiry into the Origin of Our Ideas of the Sublime and Beautiful, ed. J. T. Boulton (New York: Columbia University Press, 1958), pp. 13-14.

[36]Reynolds, VII, p. 119.

[37]Ibid., VII, p. 109.

[38]Ibid., VII, p. 111.

[39]Ibid., VII, p. 111.

[40]Ibid., VII, p. 110.

[41]Ibid., VII, p. 116.

[42]Ibid., III, p. 45.

[43]Ibid., XIII, p. 221.

[44]Ibid., XIII, pp. 212-214.

[45]Ibid., VIII, p. 111.

[46]Ibid., III, p. 48.

[47]Many of the specific definitions of nature listed in the Dictionary are not considered in this system because they do not play a role in Johnson's critical theory. For these see especially definitions: 1 (God); 5 (the course of things); 8 (operations of the material world); and 11 (physical laws).

[48]Jean H. Hagstrum, Samuel Johnson's Literary Criticism (Minneapolis: University of Minnesota Press, 1952), pp. 56-75.

[49]Ibid., p. 71. Hagstrum notes that common sense was a characteristic of Johnson's general system of nature in the sense of things as they are; this general system, however, includes such things as judgment, morality, passion, etc. (see pp. 64-71).

[50]Johnson on Shakespeare, 7:65-66.

[51]Ibid., p. 65.

[52]Hagstrum, pp. 64-68.

[53]Johnson on Shakespeare, p. 62.

[54]Ibid., p. 65.

[55]The Rambler, number 156; 5:67.

[56]Johnson on Shakespeare, 7:66.

[57]Samuel Johnson, Lives of the Poets, 3 vols., ed. George Birkbeck Hill (Oxford: At the Clarendon Press, 1945), 1:41.

[58]Ibid., 3:216-217; and Johnson on Shakespeare, 7:77.

[59]Johnson, Dictionary, "nature" definition 10; and Johnson on Shakespeare, 7:62.

[60]Johnson on Shakespeare, 7:61.

[61]Johnson, Dictionary, "genius" definitions 2 and 3.

[62]The Rambler, number 168, 5:126.

[63]Ibid., number 156, 5:70.

[64]Ibid., number 156, 5:65-66.

[65]Dennis, p. 202.

[66]Ibid., p. 202.

[67]The merging of these various philosophical systems, either as confirmations or as denials, can be seen in the Essay on Man: Epistle I develops a metaphysics; Epistle II builds a psychology; Epistle III develops a sociology; and Epistle IV deals with purpose and happiness. Alexander Pope, The Twickenham Edition of the Poems of Alexander Pope, gen. ed. John Butt, 11 vols.; Vol. 1: Pastoral Poetry and An Essay on Criticism, eds. E. Audra and Aubrey Williams; vol. 3: Essay on Man, ed., Maynard Mack: vol. 7: The Iliad of Homer, Books I-IX, ed., Maynard Mack (London: Methuen & Co., 1942-1969).

[68]Austin Warren, Alexander Pope as Critic and Humanist (Princeton: Princeton University Press, 1929; reprint ed. Glouster, Mas: Peter Smith, 1963). Warren discusses three sources for the uses of "nature" in eighteenth-century literature. He notes that Pope used the word twenty-one times in An Essay on Criticism to denote a regular, ordered world, and the human microcosm which imitates it (pp. 26-28).

[69]The numerous definitions were taken from different contests; Pope seems to have understood the pattern and the actualization of that pattern to mean the same thing--for example, numbers 9 and 13, or 3 and 18.

[70]Martin C. Battestin, The Providence of Wit: Aspects of Form in Augustan Literature and Arts (Oxford: At the Clarendon Press, 1974), pp. 1-22. Battestin enters into an interesting discussion of the importance of the harmony of the universe in early eighteenth-century ideas.

[71]Avison, pp. 57-59.

[72]Ibid., pp. 59-60.

[73]Ibid., p. 60.

[74]Ibid., p. 66.

[75]Avison, pp. 29-30.

[76]Ibid., p. 2. cf. Hutcheson and Gerard, ch. 4.

[77]Warren, p. 46. Warren quotes Joseph Spence's Aneodotes as a source for the tres partes.

[78]Ibid., p. 46.

[79]An Essay on Criticism, pp. 278-282. Lines 345-373 are virtually a manual for the successful application of versification to achieve specific effects.

[80]Dennis, pp. 201-215, and chapters 2, 3, and 4.

[81]Ibid., p. 215. The subject Dennis was particularly interested in is religious and sacred themes.

[82]James Harris, Three Treatises, The First Concerning Art, The Second Concerning Music, and Poetry and Painting, the Third Concerning Happiness (3rd ed.; London, 1772), pp. 56-58.

[83]Jonathan Richardson, Essay on the Theory of Painting, in Works, ed. J. Richardson (London, 1773).

[84]Reynolds, I, p. 21.

[85]Ibid., II, p. 31. for the definition of invention.

[86]Ibid.; see III for a discussion of the sublime style.

[87]infra, chapter 4 for a discussion of Burke.

[88]Reynolds, III, p. 46.

[89]Ibid., IX, p. 151.

[90]Ibid., XV, p. 242.

[91]Ibid., III, pp. 45-46.

[92]Ibid., III, p. 46.

[93]Ibid., V, p. 76.

[94]Ibid., XV, p. 239.

[95]Ibid., VII, p. 110.

[96]Ibid., XIII, pp. 203, 211.

[97]See Monk, pp. 167-173 for a discussion of the traditional status of these two artists. S. H. Monk, The Sublime: A Study of Critical Theories in Eighteenth-Century England (New York: Modern Language Association of America, 1935); reprint ed. Ann Arbor: University of Michigan Press, 1960).

[98]Ibid., "The Sublime in Painting," pp. 164-202.

[99]Reynolds, XV, p. 245.

[100]Dennis, pp. 218 and 223, et passim.

[101]Ibid., p. 218.

[102]Monk, pp. 47-49.

[103]Ibid., pp. 46-47.

[104]Ibid., p. 53.

[105]Dennis, p. 335.

[106]Ibid., p. 335.

[107]Ibid., p. 335.

[108]Samuel Johnson, The History of Rasselas Prince of Abissinia, ed. Geoffrey Tillotson and Brian Jenkins (London: Oxford University Press, 1971), ch. X, p. 28. Hartley reviews the question of Johnson's voice in Imlac; he claims that the enthusiastic Imlac represents a median position between the conservative, rational Johnson, and Dick Mimum, the critic. Lodwich Hartley, "Johnson, Reynolds, and the Notorious Streaks of the Tulip Again," Eighteenth-Century Studies, 8:239-336, Spr. 1975, pp. 335-336.

[109]The Rambler, number 4, 4:22.

[110]Johnson on Shakespeare, 7:71.

[111]Johnson, Rasselas, ch. X, p. 28.

[112]Ibid., p. 29.

[113]Warren, pp. 11-26.

[114]Pope, 1: 272-273 (lines 297-298).

[115]Richardson, p. 124.

[116]Ibid., p. 132.

[117]Ibid., p. 129.

[118]Ibid., p. 93 et passim.

[119]Avison, pp. 21-22.

[120]Dr. Charles Burney, A General History of Music From the Earliest Ages to the Present Period, 4 vols. (2nd ed., London, 1789), 1:186-188.

[121]Ibid., p. 186.

[122]Ibid., p. 186.

[123]Hogarth, p. 21.

[124]Aristotle, Poetics, 4. 1448[b] 4. 4-9

[125]Ibid. 4. 1448[b] 4. 10-12

[126]Wittkower, pp. 142-145.

[127]Reynolds, III, p. 43.

[128]Ibid., II, 32-36.

[129]Ibid.

[130]Wittkower, p. 156.

[131]Avison, pp. 105-108.

[132]Ibid., p. 109.

[133]Ibid., pp. 58-60.

[134]Johnson on Shakespeare, 7:78.

[135]Johnson, Dictionary, "imitation" definition 3.

[136]The context of Imlac's statement was his study of the ancient writers. In his endeavour to become a great poet he went to the effort to learn some by heart. A similarity between the attitude of Johnson and his hero Imlac can be seen by the comparison of this quote with the following one. Rasselas, ch. X, p. 29.

[137]*The Rambler*, number 154, 5:54-59.

[138]*Johnson on Shakespeare*, 7:47.

[139]Ibid., p. 64.

[140]*The Rambler*, number 154, 5:59.

[141]*Johnson on Shakespeare*, 7:47-48.

[142]Johnson, *Lives*, 3:247.

[143]Reynolds, VI, p. 87.

[144]Ibid., II, p. 31.

[145]Ibid., VI, p. 86.

[146]Ibid., III, p. 43.

[147]Ibid., VI, p. 89.

[148]Dennis, p. 201.

[149]Ibid., p. 202.

[150]Ibid., p. 201.

[151]Ibid., p. 209.

[152]Reynolds, XIII, pp. 202-205.

[153]*The Rambler*, number 125, 4:300.

[154]Johnson, *Rasselas*, ch. X, p. 29.

[155]*Johnson on Shakespeare*, 7:67.

[156]Ibid., p. 77.

[157]Ibid., p. 75.

[158]*The Rambler*, number 60, 3:318-323.

[159]Ibid., number 152, 5:45-47.

[160]*The Rambler*, number 90, 4:113.

[161]Hogarth, p. 14.

[162]Reynolds, XI, pp. 169-170.

[163]Ibid., VII, p. 108.

[164]See especially *Discourse* XIV for a discussion of the various levels of genius. There is reason to believe that Reynolds modified his definition of genius along with his orientation and the role of the sublime.

[165]Ibid., VI, pp. 66-67.

[166]Ibid., p. 88.

[167]*Johnson on Shakespeare*, 7:81.

[168]James Boswell, *The Life of Samuel Johnson and Journal of a Tour to the Hebrides*, 10 vols., ed. Clement Shorter (New York: Doubleday, 1922), 9:30.

[169]Pope, 7:12.

[170]Warren, p. 97. Warren notes that one cannot tell from Pope's writings which type of genius he actually preferred.

# CHAPTER IV

## THE SUBJECT ORIENTATION

> There is perhaps not any real Beauty or Deformity more in one piece of Matter than another, because we might have been so made, that whatsoever now appears loathsome to us, might have shown itself agreeable. Addison, 1712.[1]

With the study of the subject-orientated writers we leave the field of traditional literary and artistic critics to enter the domain of scientists and philsophers, as well as the emerging schools of psychology and economics represented by such men as David Hartley, Adam Smith, Joseph Priestley, Thomas Reid, Edmund Burke, David Hume, and Francis Hutcheson, among others. Aesthetic analysis for the subject-oriented critic centered on the operations of the mind rather than on an object, rule, or tendency in nature from which beauty could be discovered and reproduced, which was the case for the object-oriented critic. The difference between these two approaches to art entails a major difference in methodology, as we shall see later in this chapter. Association of ideas was the major principle of human behavior cited by subject-oriented writers in this period, which extended from

Addison in the opening years of the century, to the late eighteenth-century Scottish school of common sense.

In order to examine the subject orientation several topics will be discussed in this chapter: (1) some implications of the subject orientation in terms of differences between it and the object orientation, (2) the historical origins of the associationalist foundation of the subject orientation, (3) an analysis of six typical theories in terms of aesthetic systems, accompanied by flow charts, (4) the tendency of subject-oriented critical definitions to be polarized, and the foundation of these definitions in the method of an analysis of pain and pleasure, and (5) some problems presented by this aesthetic attitude.

## I

The importance of the shift from a focus on the object to an analysis of the subject--the audience--in aesthetic perspectives lies not only in the major revision of methodology, but also in the growing importance placed on feeling, or sentiment, over reason in an evaluation of the arts. Such a critical position could, and eventually did, justify the unusual, the irregular, the bizarre, and the emotive in art. However, in the early stages of this radical kind of criticism taste in the arts did not deviate from the accepted norm; contemporary prejudices were merely justified on different grounds.[2] Such critics as Reynolds

and Johnson, who were largely object-oriented classicists, frowned on the Gothic and other obviously non-classical styles on the basis of their irregularity. Addison, Burke, and others were able to justify the irregular on the basis of its appeal to the imagination. In their investigation of the psychological basis of human motivation, these British philosophers almost always included a look into the arts; thus, the body of critical tradition became incorporated into associational aesthetics.

In the preceding chapter it was pointed out that clues to an object-oriented perspective were: (1) an emphasis on the definition of nature as an aesthetic norm, and (2) an organization of materials based on an investigation of the art object itself in terms of its fundamentals, whether they were grammar, design, harmony, or other principles. There are also two distinctive features of a subject orientation: (1) organization of materials centers on the definition of human nature, and the work usually opens with this consideration, and (2) the principle of association of ideas, founded on cause and effect, is a central critical assumption. The principle of association is accompanied by an assertion that the standard for aesthetic taste exists in a physical-psychological response to art and to nature, rather than in nature and its reflection in art.

The associational response was generally accepted

to be a universal phenomenon which usually followed Locke's pain-pleasure dichotomy. Man had become the reference point of art in the subject-oriented perspective in place of the traditional standard of nature which was characteristic of an object orientation. Pope's dictum that "nature" was "at once the source, the end, and test of art," so appropos for the object-oriented attitude, was no longer an adequate criterion for criticism. One might say instead that "man's response" was the test of art.

Addison's statement at the opening of this chapter is representative of this new attitude. Most critics writing in this mode, however, attempted to prove that there was something in matter itself, or in its arrangement, which caused certain reactions--Addison himself pointed to the attraction of the species to their own kind[3] and to harmony and symmetry.[4] Kames asserted that certain qualities in things caused an intuitional recognition of their actual character.[5] Yet most, like Addison, found that principle in nature to be very general, and also found response to be highly subject to modification by experience, that is, to individual association of ideas.[6] The central point of Addison's statement was that like or dislike, taste, of things depended on the condition of the subject, that is, the individual variation of sharpness of sense and of associations of ideas.

Other key terms and ideas besides the association of

ideas which characterize a subject-oriented perspective are taste, genius, feeling, and sublimity.[7] Often subject-oriented concepts appear as pairs of modes; for example, sublimity and beauty, pain and pleasure, natural and trained genius, emotion and judgment, and relative and absolute beauty.[8]

There was a marked tendency for some systems in this perspective to be mechanistic because the emphasis was on the reaction of the subject to aesthetic data received by the senses and its interpretation by the mind solely on a sensationalistic basis. (Bishop Berkley is an obvious exception to this rule.) The general interest for the cultivation of taste, an operation of preference for good art based on experience, and a refined sensitivity, rescued many systems from a heavy mechanistic stamp.

Abrams writes that "pragmatic" critical theories are ordered toward the audience; he particularly has in mind the utilitarian ends of art.[9] A subject-oriented attitude is indeed concerned with the utile effect of art on the audience, but more specifically it deals with psychological and physical response to art as sense data. The subject orientation as defined here differs from Abrams's pragmatic orientation to the extent that it is seen as a stage in the development of critical history rather than as an expression of the Aristotelian potential of didacticism. This stage in the development of aesthetics is character-

ized by a search for a universal moral rule, an equivalent for the law of gravity--a moral gravitation as one historian calls it.[10] Didacticism in the guise of ethics became incorporated into aesthetics and criticism for many subject-oriented writers as they delved into the questions of knowledge, motivation, taste, and morals. The aesthetics of Kames and Hutcheson, for instance, are highly moralistic.

The utilitarian aspect of the arts was also important to the object-oriented mode of criticism as we have seen in the writings of Dennis, Reynolds, Johnson, and others. Many object-oriented critics were influenced to one degree or another by subject-oriented theories, not only because they had a great concern for the theoretical diadactic potentials of the arts, which, as Abrams has pointed out, they had inherited with the traditional attitude.[11]

The subject-oriented perspective defined in this chapter as a stage of historical development characterized by mechanism, empiricism, and associationalism is only one possible modification of a subjective aesthetic attitude. The creator orientation to be taken up in the following chapter, and the art orientation mentioned in chapter two, are both subjective modifications since their aesthetic standards are, like the subject orientation, relative to variable factors. The variable factor for the subject-oriented mode is individual experience and its tendency to have an effect on the interpretation of sense

data. Such an attitude had the potential to completely obliterate a solid foundation of aesthetic standards, leaving one totally without a criterion for good art. Hume noted this potential, writing,

> There is a species of philosophy, which cuts off all hopes of success in such an attempt [to set a standard of taste], and prevents the possibility of ever attaining any standard of taste. The difference, it is said, is very wide between judgment and sentiment. All sentiment is right; because the sentiment has reference to nothing beyond itself. . . .[12]

Hume was only one of many eighteenth-century British philosophers who tried to eliminate as much of the subjective as possible by proposing an objective factor in human behavior and experience: Hume pointed to the commonality of experience; Hutcheson postulated his famous moral calculus.

It was pointed out in the second chapter that there are two sub-modes of the subject-oriented perspective. The basic difference between the two centers around the nature of the senses. One attitude is that ideas arise from stimuli, and cause opinions without the help of special aesthetic or moral senses. The other is that man has a special sense to receive moral and aesthetic impressions, a sixth sense (or more) which goes beyond the physical ones. Burke is representative of the first vein of thought: his model man is affected by only the senses of sight, hearing, taste, smell, and touch. Kames, on the other hand, adds the internal moral sense of virtue (and many more internal senses) as a basic human faculty.

The distinction between these two sub-modes, and between the objective and subjective modes is made clear by Broad who divided theories of perception into two main classes: the "naively realistic account" and the "dispositional account." In both modes of perception there is an objective correlate and a subjective correlate: in the naive account the objective correlate is a quality which lies in the object waiting to be experienced by a subject, whose subjective correlate is the ability to prehend it. Hogarth's and Reynolds's theories are naively realistic according to this scheme. In the dispositional account the objective correlate is held to be a "certain kind of minute structure" of the object, the properties of which are not at all prehended by the subject, whose subjective correlate is then the ability to have sensations of a certain kind in response to that object.[13] Associationalistic, subject-oriented critical perspectives are of the dispositional kind according to Broad's scheme.

The dispositional is again divided into two types, which correspond to the two sub-modes defined above: (1) moral feelings (here aesthetic) are a kind of emotion, or (2) they are a sensation analogous to taste and smell, but not sight.[14] Addison, Hume, and Burke can be classed as dispositional-1: Hutcheson, Kames, and perhaps Gerard, can be classed as dispositional-2. The importance of the distinction between the dispositional accounts is that in the

former, beauty may be called an emotion and therefore does not call for a special sense to understand it; in the later beauty is seen as a secondary quality (analogous to color by Locke's definition), and needs a special sense for its reception. We will consider these distinctions again later.

## II

The shift in emphasis from an objective idea of beauty based on nature (object orientation) to a subjective idea based on a principle of association (subject orientation) did not occur overnight in British thought. In order to understand the origin of this radically new attitude toward the arts we must look to Hobbes and Locke in the seventeenth century ; to understand its first coherent statement we must look to Addison. A foundation for an empirical, mechanistic and materialistic interpretation of experience had been laid in the mid-seventeenth century by Hobbes who postulated that knowledge arises from sensation alone.[15] In other words, all knowledge can be reduced to ideas caused by the motions of bodies and their effect upon the senses. Knowledge, then, must be gained by conclusions of particular and individual data. And these conclusions, or ideas, are merely sense data, and decaying sense data;[16] they are literally material impressions pressed upon the mind through the senses.

Locke incorporated Hobbe's materialism into his empirical method. Locke's theory of knowledge can be divided into an intuitive awareness of self, and an aware-

ness of the external world through impressions. (That there is an idea is certain; that the idea corresponds to the external world is uncertain.) The emphasis on the data of the senses for knowledge, and the uncertainty of that knowledge were two very important factors in the subject-oriented attitude. An emphasis on the collection of individual sensations gave greater importance to the particular, as opposed to the general, for a foundation of knowledge; and the division of causes of sensations into primary and secondary modes provided a dualism of cause. The emphasis on the particular as opposed to the general, and dual modes of ideas are two important features of the subject orientation.

Locke's principle of association, as its implications were developed, eventually led to the downfall of rationalism, rule, and the general in art. In the traditional vein of object-oriented criticism in which the artist "discovers" the rules of beauty and art in nature, reason is the essential tool of his industry. Reynolds emphasized again and again that his art, like poetry, is an endeavor of the mind.[17] According to Reynolds, the artist invalidates the truth of the particular on the basis of the general; the particular is merely a deviation from the central form.[18] Locke's epistemology, however, based as it was on sense data and on emotional response to the particular, eventually undermined the validity of reason, the general, and the central form.

The particular, or the individual, was central to Locke's system, for it provided all information on which knowledge is based. He wrote that there are no preconceived ideas, no a priori knowledge, and that all impressions, or sensations, are accompanied by either pain or pleasure which serve to fix ideas in the mind.[19] Knowledge and opinions come about through reflection and association of these impressions of the particular. The "individual" is important in larger sense in that it is the source of all knowledge, and in the narrower sense in that each person has his own unique set and sequence of impressions.

Addison's role in the development of critical theories in Britain was a crucial one: his theories form a link between the psychological philosophers of the seventeenth and the aestheticians of the eighteenth centuries, define the problems, and point the direction of aesthetic speculation. He seems to have been immediately influenced by Longinus via Boileau, and by Locke; and under these mentors he molded traditional attitudes to British empiricism. Addison was the first critic to write in the subject-oriented mode, although Dennis before him had included identifiable subject-oriented thoughts in his speculations. Dennis, a contemporary of Addison's, did not adopt Addison's obvious subject orientation. Some of Dennis's major works which appeared after the Spectator papers, continued in the same vein as his earlier writings, that is, an object-oriented concern for specific qualities in nature (sacred themes)

which art is to reflect.

Addison's critical opinions do not add up to a coherent system, but he introduced and popularized two very potent ideas--the terrible as a pleasurable aesthetic experience, and the idea that aesthetic pleasure arises from associations derived from sensational experience.[20] His unique polarization of certain concepts was to have a profound effect on the course of British aesthetics. An especially powerful idea, for example, expressed in the last of his essays on the imagination, was that the imagination was capable of pain as well as pleasure.[21] Addison also wrote of two kinds of genius, the natural genius, and the genius formed by rules, or trained genius.[22] The problems presented by the difference between a poet like Homer and like Virgil had been so successfully answered by Addison by this distinction, that classicists such as Reynolds and Johnson incorporated the distinction into their theories.

In the Spectator papers 411-421, collectively called "The Pleasures of the Imagination," Addison reduced aesthetic pleasure to the delight the imagination receives upon contemplating and comparing what is great, uncommon, and beautiful. He obviously had some misgivings about founding aesthetic qualities totally in the mind: he indicated in more than one place that beauty exists in things. Yet many of these statements leave the reader to infer that there is a beauty in things, that is, an absolute beauty.

> And these [pleasures of the imagination], I think, all proceed from the sight of what is Great, Uncommon, or Beautiful.[23]

> But there is nothing that makes its way more directly to the Soul than Beauty, which . . . gives a finishing to anything that is Great or Uncommon.[24]

> The Fancy delights in anything that is Great, Strange, or Beautiful, and is still more pleased the more it finds of these Perfections in the same object. . . .[25]

Other statements about the inherent quality of beauty in nature are more direct. He found one source of beauty in the mutual attraction which draws one member of a species to another; he also found a second kind of beauty in nature which can be separated into two basic kinds: that of harmony and related ideas ultimately connected with Locke's primary qualities, and that of color and other ideas related to sight and ultimately connected with Locke's secondary qualities. Only one of these three kinds of beauty is inherent in things--the idea of harmony. Harmony, symmetry, or arrangement of parts was a basic feature of object-oriented modes, as we have seen in the last chapter. The validity of harmony, or unity, was reinforced by Newton's law of motion. Addison did not give up this absolute aspect of aesthetic value; it was merely submerged into his newer ideas and nearly lost in the subjectivism of his new approach. The problem of absolute beauty was more successfully handled by Hutcheson as we shall see later.

Of the three kinds of beauty described by Addison,

two are relative beauties which are modified by the condition of the viewer: (1) attraction of the species to one another varies according to the species in question (that which attracts one bird to another depends on nothing of the arrangement of its parts, but depends on the bird),[26] (2) the beauties which can be appreciated by the sense of sight (color, etc.) give rise to the "pleasures of the imagination," which involves an activity of the mind. The emphasis in the Spectator papers is definitely on these last beauties, the pleasures of the imagination, which arise in response to the visual world. Addison's concern with the primary characteristics of matter such as solidity, motion, and extension is also as a visual phenomenon and not as the foundation of an inherent beauty.[27] In other words, according to Addison, the mind makes beauty; it arises not from any external relationship between objects, but from our own ability to associate and create relationships.[28]

Addison's ideas of beauty and the operations of the imagination were directly influenced by Locke. Lock's epistemology was based on primary and secondary qualities. The primary qualities--motion, extension, solidity, and figure--inher in matter and can be understood by more than once sense; the secondary qualities--color, sound, taste, smell, all sense data which are interpreted by one sense--are imparted to matter by the mind.[29] The importance of this distinction is that some qualities are a property of matter,

while others are created in the mind as ideas. Our ideas of the primary qualities are resemblances of the things which produce them; our ideas of the secondary qualities are not resemblances, for there is nothing like those qualities in matter.[30]

Addison made a somewhat parallel distinction to Locke's primary and secondary qualities: he distinguished between primary and secondary pleasures of the imagination. Primary pleasures arise from the direct observation of objects; secondary pleasures flow from the idea of these objects which are not before us. Primary pleasures arise from direct impressions, secondary pleasures from memory, comparison, and contrast.[31] The similarity to Locke's distinction is striking, since in both theories the difference between primary and secondary lies between the material, and the activity of the mind in response to it. Locke's primary quality is a property of matter; Addison's primary pleasure depends upon direct experience of matter. Locke's secondary quality is caused by a power of matter to produce sensations in the mind; Addison's secondary pleasure is caused by a power of matter to produce combinations of ideas in the mind. Addison wrote of this secondary pleasure,

> This secondary pleasure of the Imagination proceeds from the Action of the Mind, which compares the Ideas arising from the Original objects.[32]

Addison, like Locke, saw more substance in the primary

than in the secondary: he implied in several passages that the primary pleasures are greater than the secondary ones, and at the same time he made a connection between the primary pleasures and nature, and between the secondary pleasures and art. He wrote, for example, that art as compared with nature is defective in its capacity to please:

> If we consider the works of Nature and Art, as they are qualified to entertain the Imagination, we shall find the last very defective, in Comparison of the former.[33]

And writing of the arts, he indicated that architecture is the most pleasing of all as it more closely approaches the characteristics of nature, that is, it has bulk and body, greatness and majesty.[34]

The senses, especially the sense of sight, assumed a priority over reason for Addison, and for many other subject-oriented critics. The word imagination, perhaps because of its root connotation of image, became a building block for a visual concept of aesthetic pleasure, and a stumbling block for other facets of aesthetic experience. Addison and many of his later contemporaries[36] felt that sight was so very essential to enjoyment, that the blind, having no visual impressions to compare, and combine, could not be capable of aesthetic experiences. Addison wrote:

> We cannot indeed have a single Image in the Fancy that did not make its first entrance through the Sight.[36]

Of the special limitations of the blind he said,

> Let one who is born blind take an Image [statue] in his Hands, and trace out with his Fingers the different Furrows and Impressions of the Chisel, and he will easily conceive how the Shape of a Man, or Beast, may be represented by it; but should he draw his Hand over a Picture, where all is smooth and Uniform, he would never be able to imagine how the several prominances and Depressions of the Human Body could be shewn on a plain piece of Canvas, that it has no Unevenness or Irregularity.[37]

Thus, in the early years of the century, Addison firmly separated reason from the senses, and gave the senses clear superiority over reason in aesthetic appreciation. Such a radical departure from the traditional approach to art, along with the idea that the terrible could produce pleasure was bound to have a profound effect on the course of criticism under the proper condition of receptivity to these ideas. The epistemologies of Hobbes and Locke served as a foundation for aesthetic ideas in systems; Addison provided a rudimentary system, and his suggestions were developed with an increasing sophistication throughout the century.

The suggestion of natural and chance association added to the fourth edition of Locke's Essay[38] appears to have stimulated the directions of associationalism in aesthetic speculation, one stressing a rationally determinable order of ideas and knowledge of things as they are, the other stressing an irrational, or chance associationalism, and an inability to determine the existence of things as they are. As the two directions were worked out in subject-oriented systems, a tendency to accept chance associations reduced the

objective correlate to an unknowable, while the subjective correlate became all that could be determined with any accuracy. Hume's system, as we shall see, points in this direction. When the natural associative tendency was stressed, not only was the objective correlate identified as certain principles (such as novelty, variety, greatness, etc.), a corresponding principle in the subjective correlate was seen to be responsible for knowledge. Such are the inner senses of Hutcheson, Kames, and Gerard. These senses are the special asethetic faculties, and not emotions. (Gerard's case, however, is thus classified with reservations, for the inner senses according to his definition are modifications of the external senses and not independent of them. These senses are labeled "internal" by Gerard because of their similarity to the external ones in their independence of volition.)[39]

The significance of the rational and irrational tendencies for aesthetics concerns the problem of establishing a standard of taste and rules of art. Often in subject-oriented criticism the two trends of rational and irrational association can be detected in the same work: Hume's "Of Taste" provides an example of this kind of conflict, his epistemology reinforces it. He wrote in this essay:

> Beauty is no quality in things themselves: it exists merely in the mind which contemplates them; and each mind perceives a different beauty.[40]

And a few paragraphs later he countered with:

> But though poetry can never submit to exact truth, it must be confined by rules of art, discovered to the author either by genius or by observation. If some irresponsible authors have pleased, they have not pleased by their transgression or rule or order, but in spite of these transgressions.[41]

The "standard of taste" was a difficult problem which was tentatively solved by the "inner sense," as we shall see later.

## III

It has been noted that the two major features of the subject-oriented mode are an organization of materials based on the definition of human nature, and a cause and effect analysis of response to art. Both of these factors lend a characteristic tone to the subject-oriented work as a study of man rather than of his art. Indeed, as a generalization, specific works and authors are cited with far less frequency than was the case for the object-oriented criticism.[42] Man was generally defined in this mode of philosophy and aesthetics in terms of his acquisition of knowledge, the formulation of his opinion, and the origin of his emotions. It is also characteristic that a subject-oriented work will have a philosophic and analytical tone. The authors were, in many cases attempting to achieve sound philosophic systems which were usually reductionistic, that is, problems were reduced to their simplest elements.

Several representative subject-oriented ideas will be

examined in terms of systems. Such an approach offers several advantages: the differences in method from object-oriented criticisms can be indicated; the function of the pain-pleasure principle can be illustrated; the complex structure of association of ideas and the subsequent concentration of the subject's response to cause can be emphasized; a writer's reasoning can be readily followed by the reader; and the similarity between subject-oriented systems can be graphically demonstrated. These six systems will be illustrated in flow charts (systems analysis). These six systems are those of Addison, Burke, Hume, Hutcheson, Kame, and Gerard.

Aesthetic theories for this group of subject-oriented writers are usually either embedded in their total philosophic systems, or they constitute a complex structure with interdependent elements. The flow charts are designed to graphically illustrate the relationships of aesthetic systems to their total philosophic systems and to indicate the feedback characteristics of these complex structures. In each case the structure of a chart varies according to the demands of a particular system. Therefore, many associative links have not been completed on the charts; many ideas are left with no links where they are not important to criticism and aesthetics, or where the writer has drawn no connection. In the case of Addison, for example, only aesthetic aspects were developed in the Spectator

papers, the source for his chart, and any other relationships would be a matter of speculation. On Kames's chart only a few aesthetic associative principles are indicated since there are so many basic principles in his philosophy that to demonstrate more than a few of them would add to an already very confusing system.

Following the lead of Locke, Addison defined man as a creature capable of forming simple and compound ideas on the basis of sense impressions; these ideas are capable of imparting either pain or pleasure. Addison's primary concern was for the workings of the imagination, and he thus did not develop the idea of pain to any extent beyond the suggestion that the imagination associates certain pleasurable ideas with it. He wrote that there are three distinct types of pleasure, which, as indicated on his chart, stem from ideas and stimuli: pleasures of the sense, which are of a grosser nature, pleasures of the understanding which are of a more refined nature, and pleasures of the imagination which fall between the two.[43] The pleasures of the imagination are founded on the sense of sight. They are be subdivided into primary and secondary pleasures, that is, direct observation, and comparison and contrast (thought, memory) of the direct impressions.[44] The formulation of secondary reactions apparently indicated both a reflexive and a voluntary operation. (For the sake of completeness of this rough system we may assume that the sense and the under-

ADDISON

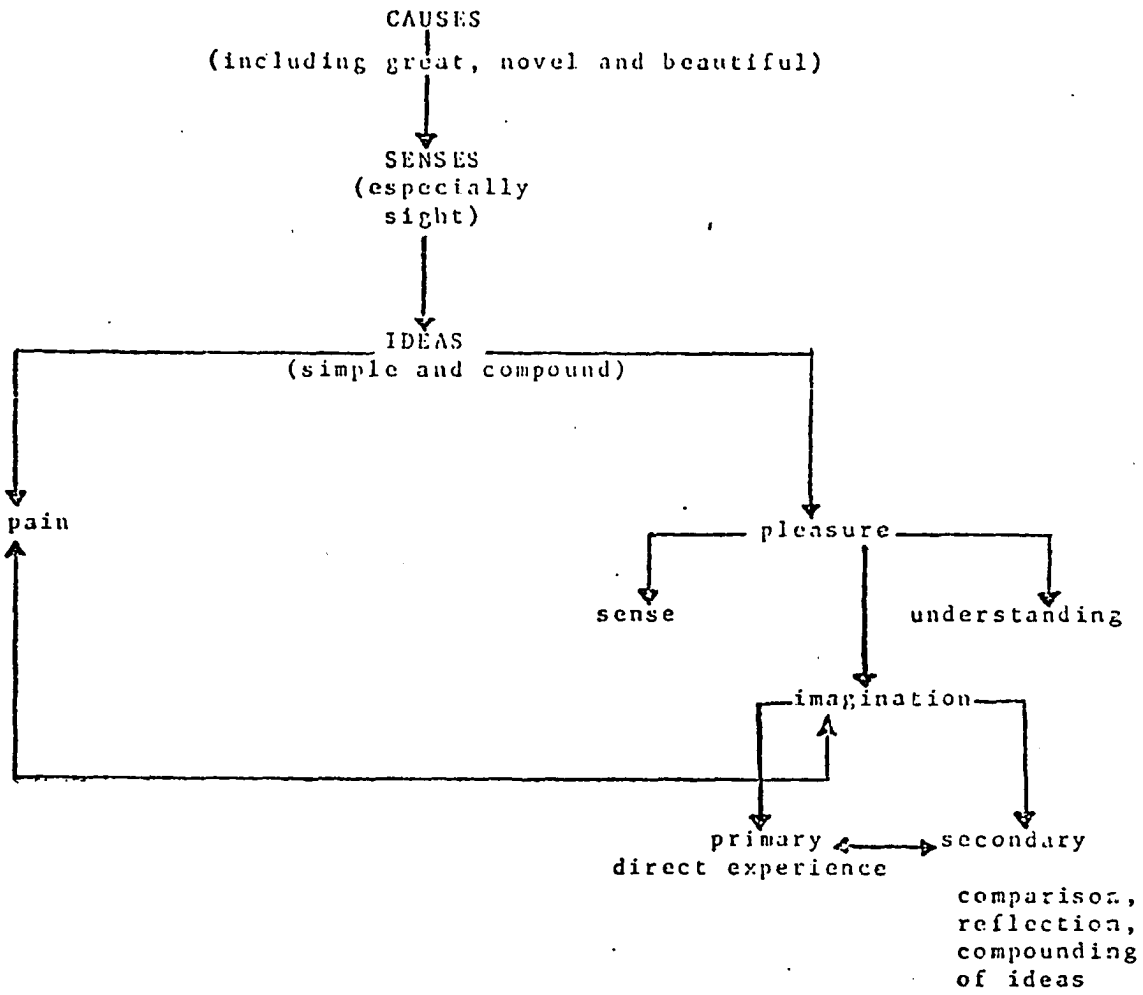


The feedback in Addison's system is not developed enough to indicate its action on this chart, but he indicated that there is something in man's nature that makes him appreciate novelty, greatness and beauty.

The structure of this chart was derived from Spectator papers #411-421.

standing each have primary and secondary pleasures, and that pain and pleasure extend to the sense and understanding with the same distinctions of primary and secondary experiences.)

Addison has indicated further associative links between the primary and secondary experiences of sense ideas. We can see that the imagination is a faculty which is separate from reasoning (understanding); yet there is a connection between the two, either by association from the reasoning faculty, or within the imagination itself in the form of secondary association. Addison did not clarify the precise character of the secondary pleasure as to whether it is emotional or rational; we can assume that it is mostly emotional however, because of the terms astonishment, wonder, surprise, and others which Addison applied to the aesthetic experience.

In his discussion of primary pleasures, Addison asserted that the direct impression (primary) is more immediate, and thus provides more entertainment to the imagination.[45] This pleasure is the delight in actually seeing things. Addison's tone seems to indicate that the secondary pleasure arises in a mechanical fashion which is involuntary, similar to sight. The pleasures arise from contact with what is great, uncommon, or beautiful.[46] This secondary reflex seems but little capable of improvement.

> A Man should be born with a good Imagination, and must have well weighed the Force and Beauty which lie in the several words of a Language. . . .[47]

The faculty of judgment has only a slight impact on the imagination, and a weakness of the imagination faculty is compared to a weakness of sight.

Addison did not make a direct statement to the effect that the secondary pleasure is that derived from art, but he intimated as much in more than one place. He wrote, for example, that architecture is more capable of producing primary pleasures than any other of the arts because of its physical characteristics. He also made it very clear that nature pleases more than art, and that art pleases more the closer it approaches to nature.[48] If we can draw a parallel between Locke's secondary qualities (sound, color, taste, etc.) and the secondary pleasures of the arts (Addison does indeed mention the "fact" that colors and light are qualities created in the mind)[49] we can see that Addison's intention was that one makes the associations leading to pleasures in the arts much in the reflexive fashion that color is experienced. If we take into consideration Addison's definition of genius (which will be discussed later in this chapter) we can see that the secondary pleasures may be compounded by the action of the understanding. On the chart this could be indicated by an input from understanding to the imagination.

We are left with the question of Addison's definitions of greatness, beauty, and novelty. In some contexts of the papers these qualities can be understood to actually exist

in things as they are and can be immediately understood by the perceiving mind.[50] In Locke's terms these aesthetic characteristics must be primary qualities in order to inhere in matter. Addison's meaning, however, seems to be that figure, size, and mass are the primary qualities which are conducive to the experience of greatness. Addison stated in another context that beauty is created in the mind by association through the faculty of sight.[51] The subjective corollary, in this case, is the power to have the sensation of beauty, and the objective corollary is the structure of matter which causes these sensations. The problem is, then whether Addison understood beauty as a quality in things (primary) or a quality created by the mind (secondary) by association. Regardless of statements to the contrary, Addison's analysis points to a beauty created in the subject's mind.

Burke's system is very similar to Addison's with the addition of some very impressive refinements. These refinements, as we shall see, lead to some paradoxical problems. Taken by itself, without the introductory easay "On Taste" added to the second edition, An Inquiry into the Origin of Our Ideas of the Beautiful and the Sublime[52] appears to be an object-oriented study of the qualities in things which is tinged with a subject-oriented observation of the mechanistic action of the mind on these objects. The Inquiry placed great

emphasis on the causes of our ideas of the aesthetic modes, which are seen to be the qualities in objects of roughness, smoothness, obscurity, clarity, smallness, largeness, among others. The essay on taste, however, puts the total work into perspective and throws light on Burke's truly subject-oriented associationalist attitude toward art.

Dividing the powers of the mind into imagination, judgment, and sense, Burke wrote that we are made aware of external objects by these faculties alone.[53] By this structure it would seem that imagination and judgment are independent of and equal to the senses. In actuality they both arise form, and affect the senses. Of the senses Burke wrote,

> We do, and we must suppose, that as the conformation of their organs are nearly or altogether the same in all men, so the manner of perceiving external objects is in all men the same, or with little difference.[54]

These impressions of the senses are called ideas, and these are either painful or pleasant.[55]

The imagination is a creative power of the mind, but it is not independent of the senses.

> The mind of man possesses a sort of creative power of its own; either in representing at pleasure the images of things in the order and manner in which they were received by the senses, or in combining these images in a new manner, and according to a different order. This power is called imagination. . . . But it must be observed, that this power of the imagination is incapable of producing anything new; it can only vary the disposition of those which it has received from the senses.[56]

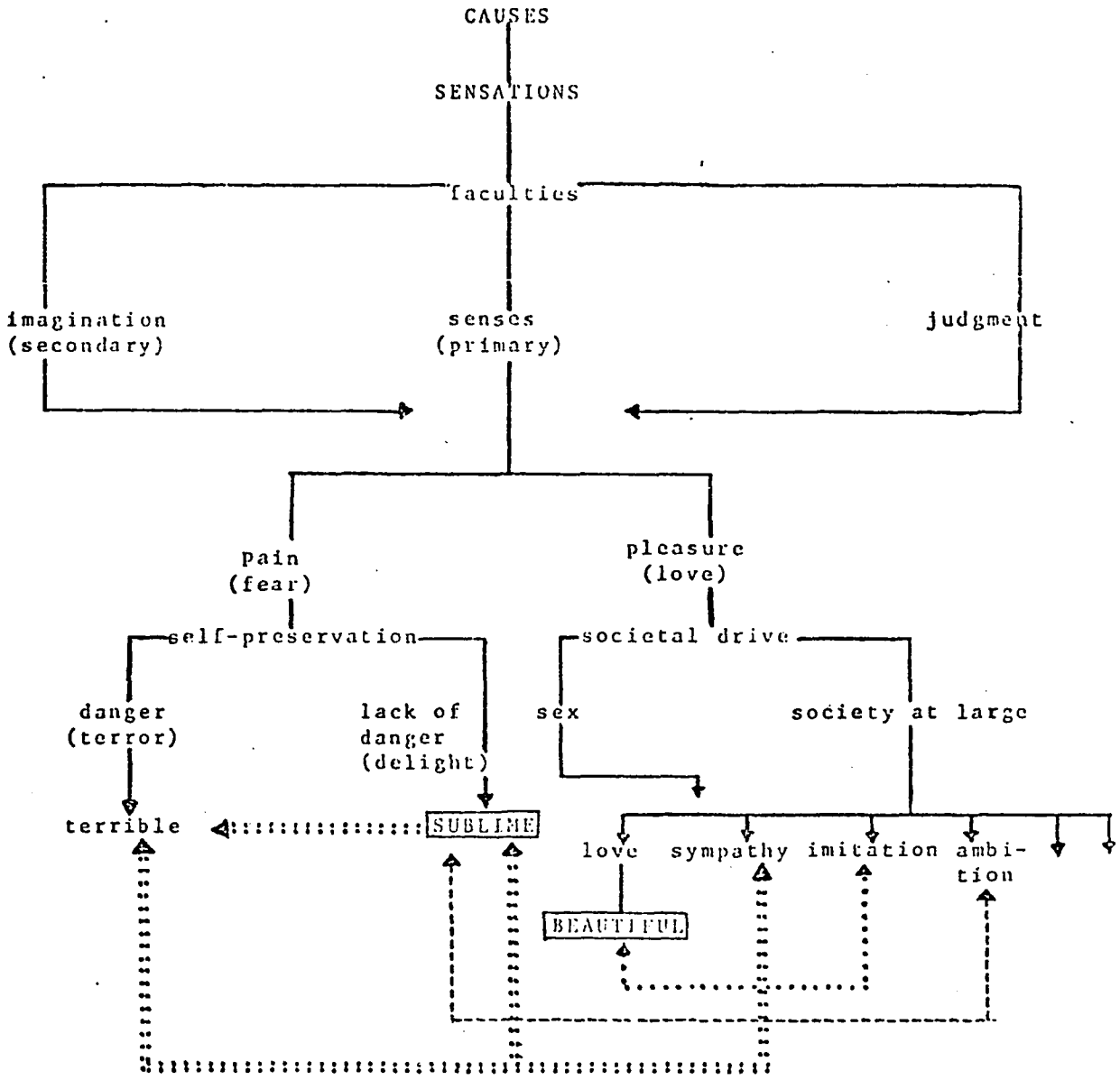
CAUSES
SENSATIONS
faculties
imagination (secondary)
senses (primary)
judgment
pain (fear)
pleasure (love)
self-preservation
societal drive
danger (terror)
lack of danger (delight)
sex
society at large
terrible
SUBLIME
love
sympathy
imitation
ambi-tion
BEAUTIFUL
associative links:
imitation
sympathy
ambition
AESTHETIC MODES
BEAUTIFUL
SUBLIME

The imagination, like the senses, acts uniformly in all men.[57] The faculty of judgment arises from knowledge and experience. It is a process of comparing and contrasting various examples of nature and art; thus, it also arises from the senses.[58] For Burke, as for Addison, the pleasures of the senses are primary, and the pleasures of the imagination are secondary.

Locke's two responses of pain and pleasure are an integral part of Burke's system. All human responses are based on either self-preservation, linked with pain, and causing the emotions of fear and its modifications, or social drives, linked with pleasure and causing the emotions of pleasure and its modifications.[59] Burke wrote that the imagination is as capable of pain as the senses.[60] Both basic drives have two major modifications which give rise to various emotions, and which act as associative links with other emotions. These drives either directly or indirectly cause the aesthetic experiences of beauty and sublimity.[61] These two (beauty and sublimity) are the only aesthetic modes, and they each arise from different ultimate causes-sublimity from fear, and beauty from love. They are reductible to pain and pleasure respectively.

Pain and pleasure both produce several emotional modifications, the most important of which are delight and fear in the case of pain, and love, sympathy, imitation, and ambition in the case of pleasure.[62] Sympathy, for example,

which arises from the social drive, acts as an associative link which can relate to love, causing the experience of beauty; it can relate directly to delight, a modification of fear which comes from either being removed or remote from danger, causing an experience of the sublime; or it can indirectly give rise to the sublime through the terrible (see chart).[63] While the emotions caused by pain and pleasure act as associative links by joining ideas, the faculties of imagination and judgment also add their influence to the sensitive experiences.

Burke's system is a clear, neat mechanistic explanation of aesthetic experience, and it makes a final schism between two aesthetic modes and their causes. Yet, it poses the same problem as Addison's, that is, whether these qualities which cause emotions exist in things, or whether they are in fact created in the mind by association of ideas. Burke's preoccupation with qualities such as texture, size and quality lead us to conclude that qualities are properties of things. The essay "On Taste," however, draws quite another conclusion, that qualities are created in the mind. Whatever the reader's final judgment may be on Burke's position on this matter, his analytical system is based on the reactions of the mind to these qualities whether they inher in things or are created in the imagination.

Hume's system offers a solution to the origin of aesthetic qualities; they originate in the mind. Reference

to the flow chart shows that the only connection with external causes is perceptive power, that is, the five external senses.[64] Imagination and judgment are clearly dependent on sensitive experience. Reasoning power, or judgment, is one of the effects of ideas--ideas are impressions--which in turn are the effects of sensations. There are two kinds of sensations, impressions and ideas, each having two degrees, the simple and the complex.[65] Our simplest ideas always correspond to the simplest impressions, and our complex ideas only sometimes correspond to the complex impressions.[66] In this system the simple ideas and impressions are more reliable than the complex ideas.[67] Hume's system has obviously given more credibility to man's emotional nature (feeling) than to his rational nature.

Hume demonstrated that ideas are connected by cause and effect, and that such connections can only be attributed to things which are verified by the senses through experience.[68] This line of reasoning obliterates the grounds for the reliability of cause and effect since it is founded on experience through sensation rather than on a knowledge that can get behind experience.

> I shall venture to affirm, as a general proposition, which admits of no exception, that the knowledge of this relation [cause and effect] is not, in any instance, attained by reasonings a priori; but arises entirely from experience. . . . Causes and effects are discoverable, not by reason, but by experience. . . .[69]

HUME

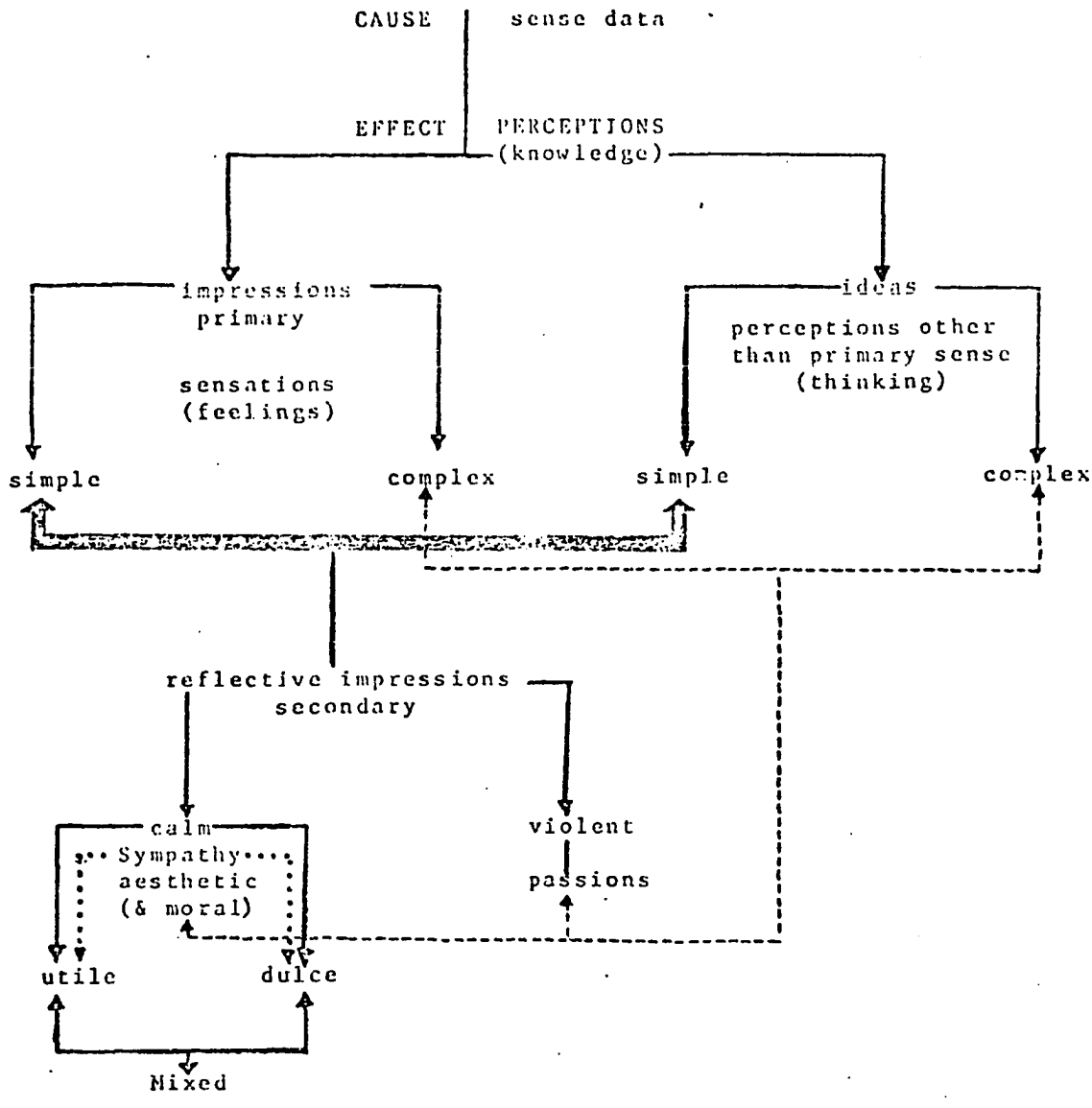


always exactly correspondent

---------- sometimes correspondent, association, imagination

.....operative emotion

Cause and effect is, along with resemblance and contiguity, a principle of association by which ideas are connected.[70]

The significance of Hume's distinction between ideas and impressions and the subsequent reliability of impressions (feelings) over ideas, is that aesthetic experience falls within the realm of impressions. It is also a reinforcement of the superiority of the primary experiences. Reason (idea) is capable of conversing about aesthetic feeling, but it is is not always correct. On the flow chart the reflexive impressions, which arise from the correspondant ideas and impressions, are divided into calm and violent emotions. It is from the calm, reflexive impressions that man's experience of beauty and morality originate.[71] Man's idea of beauty arises from two causes here, usefulness and pleasantness, and it is usually caused by a combination of the two.[72]

Structurally, within the system, Hume sees ideas of beauty arising from feeling, and, as he had stated in his essay "On Taste," sentiment has reference to nothing but itself.[73] Although he attempted to give sentiment the status of objectivity on the basis of the universality of perception, Hume's aesthetic suggests the irrational, chance association mentioned by Locke merely by the fact that the correctness of associations (knowledge) cannot be verified. Hume's idea of the origin of beauty is subject-oriented not only because of the stress on the process of idea formation, but also because beauty is not an inherent property of matter--it is created entirely in the mind.

Hutcheson's system (1728), while still centered on the origin of ideas and cause and effect, is very different from the three just described. The uniqueness of his system is that there are four senses apart from the five external ones which can be aware of cause. These he called the internal senses of "beauty," "moral," "public," and "honor."[75] He also stated that the internal senses do not presuppose innate ideas;[75] he was simply giving names to perceptive powers analogous to the power of determining harmony through hearing.[76]

Hutcheson made a basic distinction between external and internal senses; the internal senses "have nothing of what we call Sensible Perception in them."[77] While the external senses are suited to receive specialized data such as sound, color, or smell, the internal senses are suited to receive compound data such as uniformity, order, arrangement, and imitation.[78] Compound data concerns information that must be compared, contrasted, or otherwise understood as relative to various factors. Reference to the flow chart will show that both the internal and external senses have knowledge of cause.

Distinguishing between <u>absolute</u> beauty and <u>relative</u> beauty, Hutcheson wrote that the former exists as a cause and has a correspondent sense to perceive it.[79] The ideas of relative beauty on the other hand are formed by association of the ideas which arise from all of the senses.[80] Ab-

HUTCHESON

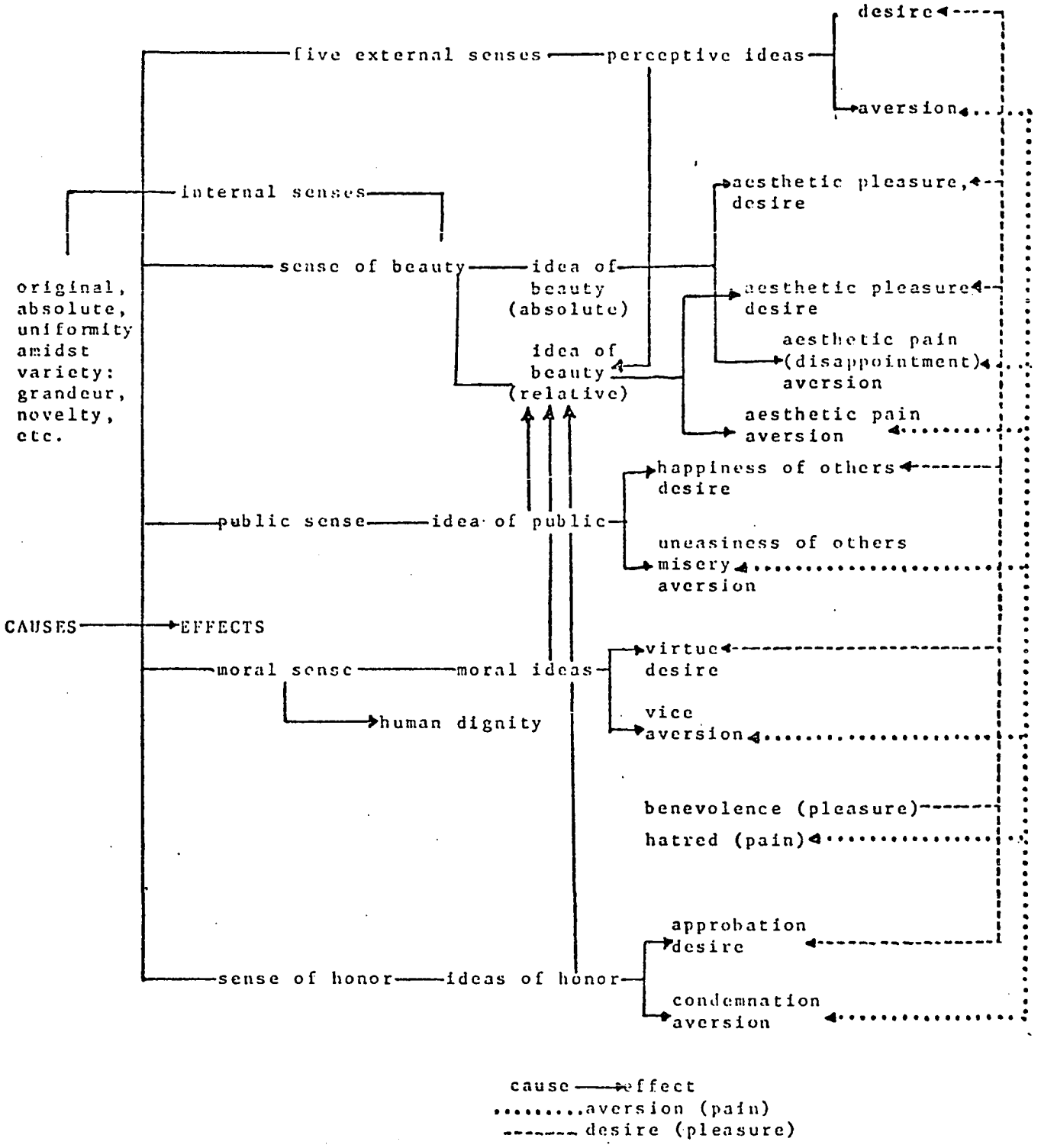
desire
five external senses
perceptive ideas
aversion
internal senses
aesthetic pleasure, desire
sense of beauty
idea of beauty (absolute)
aesthetic pleasure desire
original, absolute, uniformity amidst variety: grandeur, novelty, etc.
aesthetic pain (disappointment) aversion
idea of beauty (relative)
aesthetic pain aversion
happiness of others desire
public sense
idea of public
uneasiness of others misery aversion
CAUSES
EFFECTS
virtue desire
moral sense
moral ideas
vice aversion
human dignity
benevolence (pleasure)
hatred (pain)
approbation desire
sense of honor
ideas of honor
condemnation aversion
cause → effect
.....aversion (pain)
------ desire (pleasure)

solute beauty is conversant with cause, relative beauty is not (see chart). Processes of association are called compounding, comparing, contrasting, and abstracting.[81] These processes connect all the ideas caused by both types of senses, and affect the idea of relative beauty.

Hutcheson, who was a student of Shafesbury, was influenced by his mentor, but Shaftesbury's ideas were sifted through the Lockean perspective of association of ideas and the ultimate reduction of all experience to pain and pleasure. Shaftesbury wrote not of pain and pleasure, but rather of moral good; his aesthetic attitude falls within the scope of the next chapter.

Unlike Hume, Burke, and Addison, Hutcheson developed the Lockean choice of the rational and the irrational tendencies of associationalism in the direction of the rational. For this philosopher the knowledge of the order of association, cause and effect, was assured by an awareness through senses beyond the physical experience of cause. Actual perceptive powers give man the ability to know absolute beauty; chance association gives rise only to relative beauty.

Structurally Kames's (1762) system is very much like Hutcheson's. Kames added the sense of self, and the powers of wit, judgment, and memory to the same basic two powers of internal and external senses agreed upon by Hutcheson. Judgment, wit, and memory are not actually

perception on the level of self, internal, and external senses, but they have a power independent of these and are thus graphed on the flow chart as conversant with cause. Judgment, wit, and memory act as associative principles, along with certain sentiments arising from the external senses, and serve to connect ideas.

Each of the emotions which stem from the external senses of sight and hearing[82] has an operative principle, or internal sense, to reassure the perceiving mind that there is a correspondence between perception and its cause.[83] The skepticism of Hume is thus avoided, for cause can be determined by the co-operation of the internal and external senses. (Hume wrote that cause cannot be known.) In the respect that there is a duplication of the direct sense with a correspondent perception, Kames's system resembles Hume's (cf charts). For the latter philosopher, however, all perception lies within the realm of the external senses; for Kames the external senses are aided in their understanding of cause by a direct perception, a kind of common sense. In Kames's system aesthetic perceptions arise from the pleasant emotions which are caused by the senses of sight and hearing. Like Hume, Kame sees the aesthetic experience arising from the emotional side of man's nature; and like Hutcheson, Kames agrees that the aesthetic senses are aided by association of ideas from a non-physical source. Wit, judgment, and memory are capable of further compounding ideas by association.

Kames attributed the feeling of beauty to demonstrable cause as did Hutchison and Burke. These causes however, lie not in the object, nor in the perceiver (subject), but in the operation which combines ideas. Pointing to the primary and secondary qualities of Locke, Kames noted that some qualites such as color cannot possibly inhere in matter; other qualities, such as regularity, also are not a property of matter. Thus, in this system Broad's objective correlate is a disposition of matter which causes a process (the subjective correlate) in the subject by which he attributes beauty and other qualities to matter,

> A singular determination of nature makes us perceive both beauty and color as belonging to the object, and, like figure or extension, as inherent properties.[85]

In the same context he wrote,

> Beauty, therefore, which, for its existence, depends on the object perceived, cannot be an inherent property in either.[86]

Kames's system is an expression of the rational potential of Locke's principle of association, for there is an assurance from the internal senses that the external senses are correct in their perception of things. Kames's aesthetic was structured to prove that the associational process, "thoughts in a train," as he termed it, is demonstrably natural and that perceptions are true representations of things as they exist. Kames's aesthetic system flows neatly into a critical system, which is, at its core, philosophically oriented to epistemology. Thus, he moved from a treatment of

KAMES

CAUSES
(efficient)

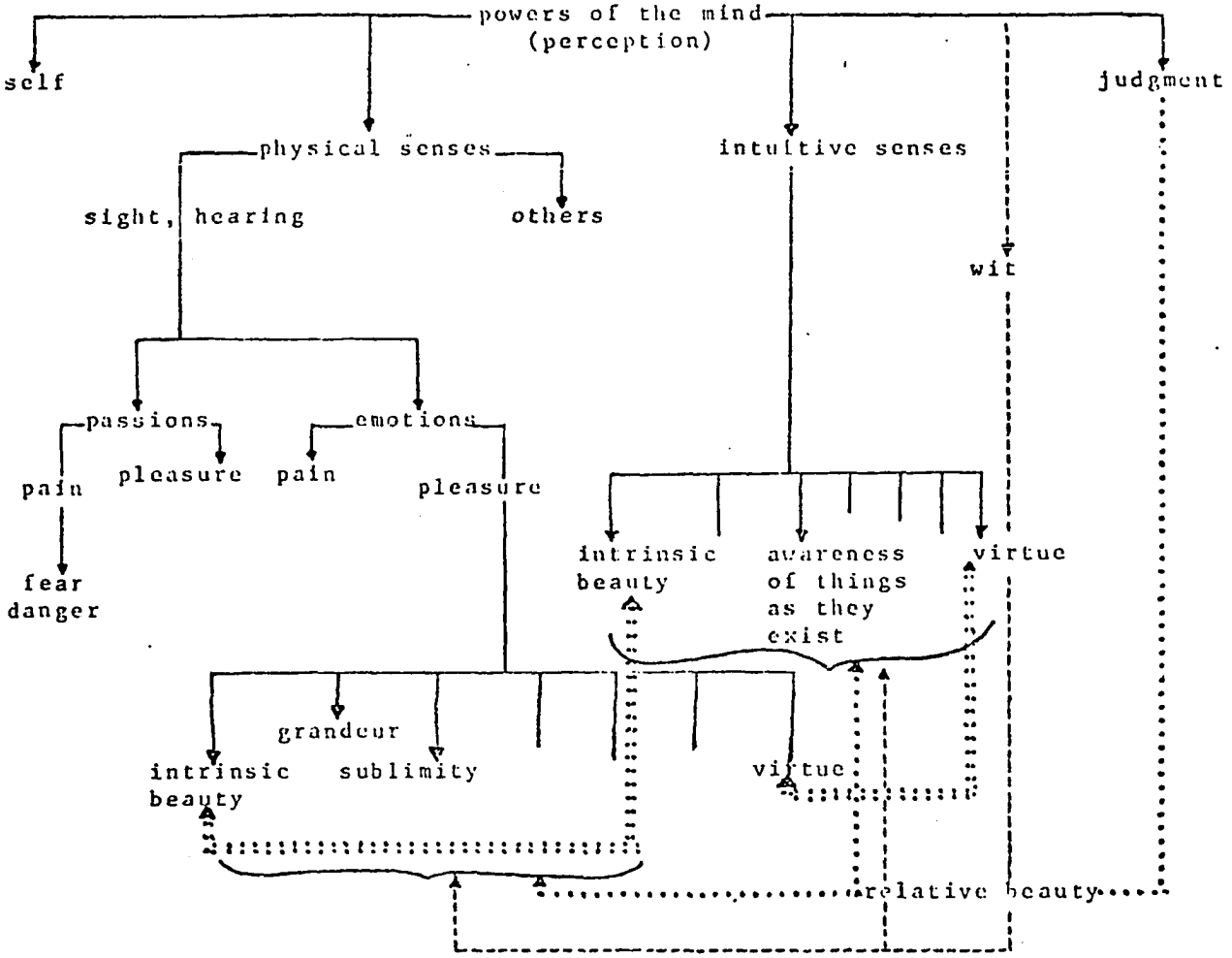


associative links:

:::::::: from perception to intuitive sense

..... judgment

--------- wit

KAMES

CAUSES
(efficient)

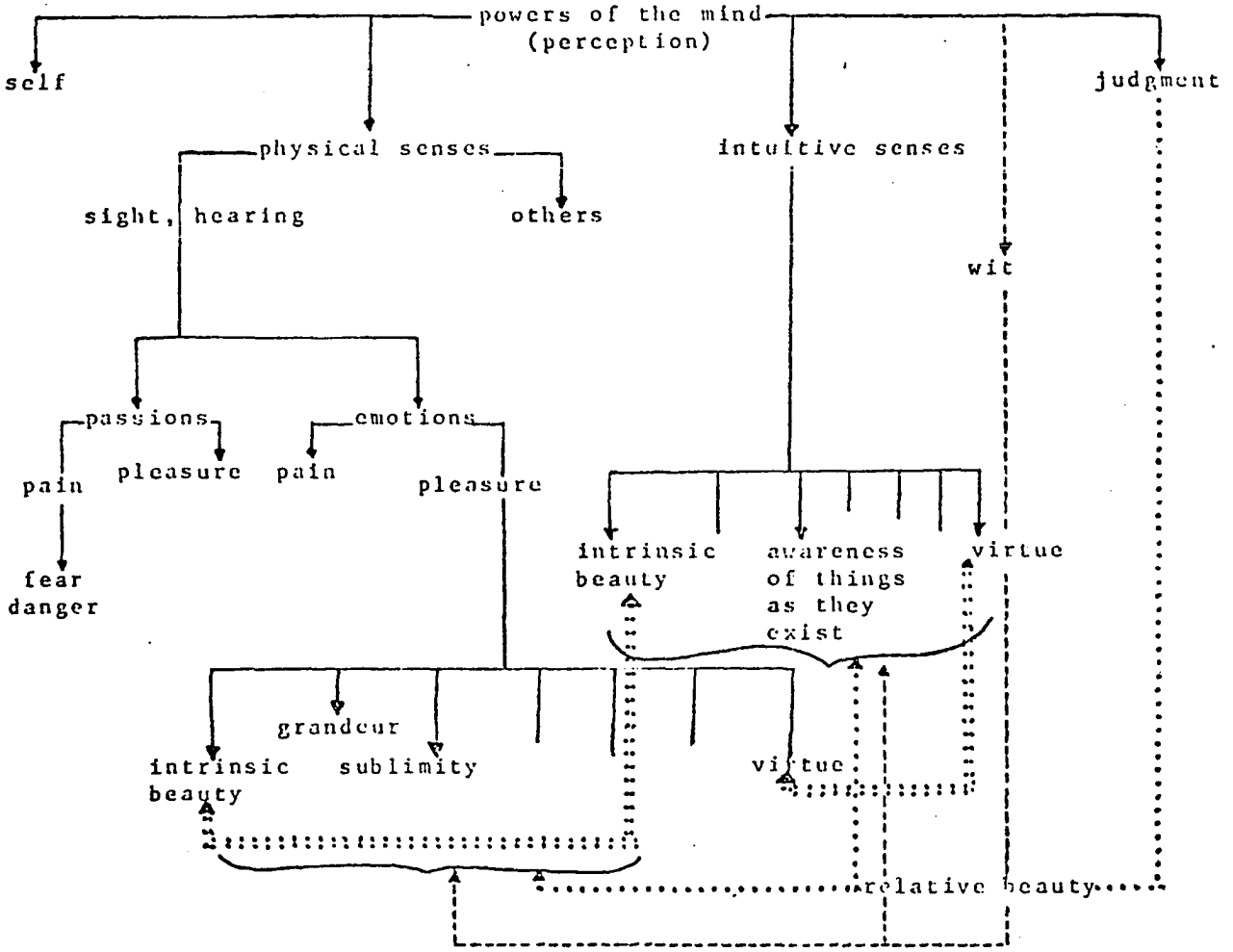


associative links:

::::::::: from perception to intuitive sense

..... judgment

-------- wit

cause of emotion and of ideas, to external expression of emotion, to genres and rules which promote pleasurable aesthetic emotions.

Gerard, the last philosopher whose system is demonstrated here, presents a systemwhich bears a similarity to those of Hutcheson and Kames. His major publication An Easay on Taste (1759) actually preceded Kames's Elements (1762) by a few years. Several major differences between these two Scotts can be indicated: Gerard's internal senses, unlike those of Kames, are clearly modifications of imagination-one of the faculties arising from sense perception; unlike Kames, Gerard did not include a theory of criticism in his purely aesthetic system; and Gerard's philosophy is much more satisfactory than Kames's as an aesthetic system.

The three faculties of association--judgment,[87] memory,[88] and imagination--each stem from perception: each is responsible for a kind of association, and each acts upon the others. (Only the links to imagination are indicated on the flow chart.) The imagination itself has two modifications, internal senses which are not independent of the external senses, and emotions.[89] There is a duplication between the external senses and the emotions. This type of duplicate structure was seen in the systems of Hume and Kames; here it has been refined to have Hume's dependence upon the external senses, and Kames's type of awareness of complex ideas through some avenue other than emotions.

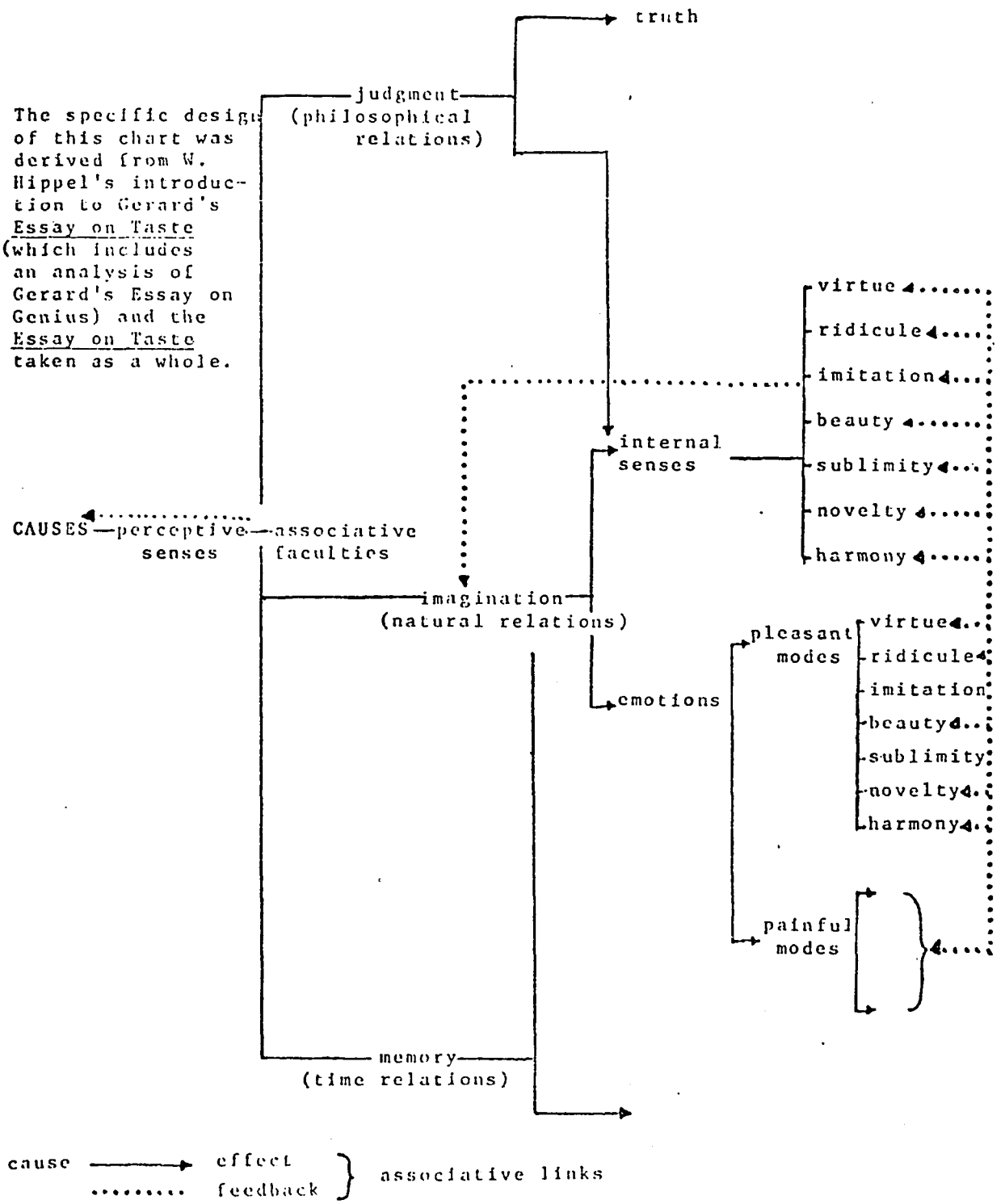
truth
judgment
(philosophical relations)
The specific design of this chart was derived from W. Hippel's introduction to Gerard's Essay on Taste (which includes an analysis of Gerard's Essay on Genius) and the Essay on Taste taken as a whole.
virtue
ridicule
imitation
beauty
sublimity
novelty
harmony
internal senses
CAUSES
perceptive senses
associative faculties
imagination
(natural relations)
emotions
pleasant modes
painful modes
virtue
ridicule
imitation
beauty
sublimity
novelty
harmony
memory
(time relations)
cause
effect
feedback
associative links

Gerard's internal senses seem to act like a common sense which is similar to Kames's internal senses.

Feelings arising from the emotions are reflexive and are immediately verified by the internal senses. There is an associative link between the senses and the emotions (the modifications of imagination), as well as links between the faculties themselves. Through the internal senses and the emotions there are seven aesthetic modes which can be experienced, virtue, ridicule, imitation, beauty, sublimity, harmony, and novelty. The three causes of aesthetic experience indicated by Addison novelty, beauty, and greatness (here sublimity), have all been reduced to distinct modes by Gerard. These seven modes, along with their correspondant emotions, are effects which arise from cause. The mind, or set of faculties, also conforms itself to the cause so that there is an assured conformity of cause to effect. The skepticism of Hume is thus by-passed.

> When an object is presented to any of our senses, the mind conforms itself to its nature and appearance, feels an emotion, and is put in a frame suitable and analogous; of which we have a perception by consciousness or reflection.[90]

Thus, a feedback makes a complete and interwoven progress through all the faculties and back to the cause in an almost immediate, reflexive process.

This unique feedback process gives Gerard's system a closed aesthetic structure in which the subject is aware of cause almost immediately, while it eliminates the need

for faculties independent of the external senses. In a sense Gerard has taken a middle path between Locke's two alternatives regarding the rational and irrational associations. He has combined the best features of Hume's system, which stressed the irrational--that is, total inability to know cause--with the best features of Hutcheson's system, in which the mind is aware of cause by powers beyond the senses.

These six systems have not been presented in a chronological order, but in a structural order demonstrating similarities between various representative subject-oriented theories. A clear separation of aesthetic modes and philosophical support for them can be seen in three of these six systems, those of Burke, Kames and Gerard. Addison, Hume, and Hutcheson made no distinction other than beauty which is itself two aesthetic modes, Gerard named seven and Kames gave many. Besides proliferating the principles and new critical definitions, the systemsincreased in complexity in order to come to grips with problems presented by the basic assumption of man's dualistic motivations of pain and pleasure, and his dualistic rational-irrational nature. Both of these features, new terms and new problems will be discussed in turn.

## IV

Locke's two very potent explanations of man's nature,

the sensationalist pain-pleasure dichotomy, and the "mad-rational" tendencies, had a profound effect on the critical-aesthetic vocabulary and systems of subject-oriented theorists who developed the implications of these ideas in the arts. The dual character of man's nature, seen by Locke to arise both from natural and from chance association,[91] can be detected in all the important British subject-oriented concepts of this period, for the nature of man was the central issue of this aesthetic orientation, and Locke's influence was pervasive. As we have seen, it was Addison who first resolved aesthetic problems in terms of Lockean psychology to solve several very old problems, and thus to separate key ideas into distinct polor modes.

Addison's influence to the direction of subject-oriented aesthetics can be seen on two levels--on the level of overall systemic structure, and on the level of an evolving critical terminology. Systemic structure involves the relationship between ideas (as indicated on the flow charts) such as the central role of pain and pleasure, and the rationale and support for more than one aesthetic mode. Terminology refers to the specific words used to indicate sets of ideas generally agreed upon by subject-oriented critics to be crucial to aesthetic discussion. Such terms as sublimity, taste, genius, feeling, experience, and association were extensively used by this group of writers.

Addison was the first, following Locke's lead, to make a clear separation of pain and pleasure and relate each

specifically to aesthetic experience. His treatment of the beautiful was to find that the "great" and the "novel" enhance "beauty." The great, as Addison conceived it, was to eventually be developed into the mode of sublimity by his successors.[92] Addison also divided "imagination" into two modes. The imagination, he said, is capable of pain as well as pleasure,[93] and it is capable of receiving pleasure from the unpleasant as well as the pleasant.[94] Locke's influence, as we have seen, extended even to Addison's primary and secondary modifications of the imagination. Further development of polarized definitions and functions can be seen in Burke and Hume.[95]

The concept of genius held by representative writers of this perspective is distinctive enough in its outlines, and seems to be completely dependent upon the system from which it springs (that is, a dual concept of man based on the experiences of pain and pleasure), to indicate that there is a characteristically subject-oriented idea of genius. As attention was shifted from art and nature to man, the requisites of artistic production and especially appreciation came under investigation. Basically two major concepts of genius can be identified in this perspective which roughly correspond to and reflect the two major modes of sublimity and beauty. The rational genius is identified with Locke's natural association and the expression of beauty, the enthusiastic genius with Locke's chance association and the expression of sublimity.

Addison's attitude toward genius demonstrates the typical subject-oriented solution of the problem of the relationship of the artist to his material, and of the conoisseur to art and nature. Addison's concept has four major features which in some degree or form are to be found in his later contemporaries: (1) there are two kinds of genius in the arts, (2) the imagination as a process of association is essential to genius, (3) the imagination necessary to genius is innate, yet improvable to a slight degree, and (4) there is a suggestion of different kinds of genius for the different disciplines.

In the Spectator 160 Addison defined two types of genius, an idea which he reiterated in the later papers on the imagination. The two kinds of genius are capable of producing two distinct kinds of art, the "nobly wild and extravagent" in the case of natural genius, and the refined, correct, and restrained in the case of trained genius.[96] Such a distinction conveniently explains the differences between Homer and Virgil, Pindar and Aristotle, Shakespeare and Milton. Pope made a similar distinction in his preface to the Iliad, but he did not provide a psychological or philosophical foundation for the distinction. Again in the papers on the imagination Addison took up the issue of genius, associating Homer with the

great, Virgil with the beautiful, and Ovid with the strange.[97] His treatment of genius points in the direction of separate aesthetic modes and their expression by special kinds of imaginative powers.

Addison was reluctant to call one kind of genius superior to the other,[98] but his argument taken in its totality as well as his tone, indicates that the natural genius was superior to the trained one because (1) the ancients, who were natural geniuses, had a "greater and more daring genius," and (2) the trained genius is more likely to follow rule to the extreme, and hence will not allow the full play of his "own natural parts."[99] He anticipated the trend of the later part of the century in this idea. In discussing taste and how one goes about acquiring it he said,

> The faculty must in some degree be born with us, and it very often happens, that those who have other qualities in Perfection are wholly void of this. . . .[100]

which indicates that there is some degree of inexplicable intuition involved in the operation of genius. Addison's preference for the qualities of the sublime were to be echoed throughout the century, to be questioned only by the later fashion for the picturesque.

As we have seen, genius for Reynolds indicated a quality which could be cultivated through the acquisition of necessary skills and powers of observation. Genius for Addison, on the other hand, involved the associative powers.

And, as he was at a loss to explain "the necessary cause" of the operations of the imagination, the subsequent effect was hidden; he explained that it must be born in us, to be augmented by the understanding.

> But notwithstanding this Faculty must in some measure be born with us, there are several Methods for Cultivating and Improving it, and without which it will be uncertain, and of little use to the Person that possesses it.[101]

The innate talent and the cultivation of it extends even to the very appreciation of the arts, that is, taste.[102] Taste and Genius are integrally related. Taste, Addison wrote, is "that Faculty of the Soul, which discerns the Beauties of Author with Pleasure, and the Imperfections with Dislike.[103]

Finally, Addison left us with the suggestion that genius may have several types of imagination. He wrote of the special imaginative genius of the historian, the philosopher, the geographer, as well as of the poet.[104] This idea naturally flows from the concept of an innate talent which must be expressed in some medium or another.

Addison thus laid out the direction of critical vocabulary as well as aesthetic system. The critical polarities indicated by Addison were further developed, expanded, or denied by his successors in the subject-oriented perspective. Beauty, sublimity, natural and trained genius, natural and cultivated taste, absolute and relative beauty--the central issues of this perspective--were clearly based on the Lockean pain-pleasure dichotomy. Although Hutcheson defined

no aesthetic modes other than beauty, he founded his system on pain and pleasure: he wrote of aesthetic pain in terms of aversion, rather than in terms of the terrible as Addison had done, or of the awesome as Dennis had done, or of the horrible as Burke was to do.

The development of the sublime as an aesthetic experience distinct from beauty was the most remarkable feature of the subject-oriented perspective. Its fundamental rationalization, however, is the polarization of human experience into pain and pleasure. Monk's history of the idea of the sublime, the definitive study of the subject, traces the course of the concept from its reintroduction into western thought in the seventeenth century, through its role in the development of an associationalist school of aesthetics in Britain.[105] While Addison had suggested the separation of aesthetic modes, especially in the Spectator 417, Mark Akenside deliberately contrasted the sublime and the beautiful.[106] It was Burke, however, with his Lockean psychological foundation of pain-pleasure, love-fear, who gave philsophical credibility to the theory.

With Burke the schism between beauty and sublimity was completed: the sublime achieved an independent and somewhat superior status to the beautiful through Burke's peculiar attribution of causes and emotions to the two modes. According to Burke's ingenius scheme, fear, pain, and the sublime ruled the world of the dark and obscure, the rough and large,

the terrible and fearful. Powerful emotions were attributed to the sublime feelings similar to what Dennis had described earlier in the century. By comparison, the beautiful was timid. Love, pleasure, and the beautiful were associated with smallness, smoothness, clarity, and similar attributes.[107]

This separation of aesthetic modes, of course, did not stop with the sublime. We have seen that Addison had suggested the possibility of yet another mode by the "novel and strange" associated with Ovid.[108] Certainly the beautiful and sublime as defined by Burke did not cover all the categories of things which appealed to the human imagination. More categories were needed too, for the moralistic aesthetic structure of Kames and Gerard. Toward the end of the century the mode which occupied many critics and surpassed the sublime in the fashionable language was the picturesque. The major defenders of the picturesque were William Gilpin, Uvalde Price, Richard Payne Knight, and Humphrey Repton. While the picturesque was developed specifically to handle the problems of landscape and gardening, it grew out of the tradition of Burkean psychology, and Gerard defined it in terms to fit into his system.[109]

Further aesthetic modes were defined by Gerard who listed beauty, sublimity, novelty, imitation, harmony, ridicule, and virtue. The first three of Gerard's senses obviously could be aesthetic modes in terms of Addison's and Burke's systems. The direction taken after Addison in the

subject-oriented mode was that aesthetic emotion was a prerequisite for the identification of an aesthetic category. According to Gerard, each of his seven categories correspond to distinct aesthetic feelings. He said of the sense of virtue,

> The Moral sense is not only itself a tast [sic] of a superior order, by which, in characters and conduct, we distinguish between the right and the wrong, the excellent and the faculty but it also spreads its influence over all the most considerable works of art and genius.[110]

Of the ridiculous he wrote,

> In our enumeration of the simple powers which constitute taste, we must not omit that sense which perceives, and is gratified by the odd, the ridiculous, the humorous, the witty. . . .[111]

Harmony, he said, is a sense related to the arts but especially to the "beauty" of music.[112] Even imitation, when seen from Gerard's viewpoint, is an aesthetic sense.[113]

Gerard's internal senses are thus capable of discerning seven distinct modes of aesthetic experiences. The internal causes of experience are compound, but their effects are as simple as the seven categories.[114] They are authentic aesthetic modes in a Humean and Burkean, sense as each has a correspondent emotion, and affect the other through the associative principles. The passions and the internal senses are both modifications of the imagination, and are affected by the judgment by the associative principle (see chart).

Aesthetic categories were further multiplied by Kames, who saw them in a somewhat different perspective than had

Addison, Burke, Hume, and Gerard. These last four men made a very close connection between emotions and aesthetic modes: for them, the passions or feelings arise as a response to the contact of the senses with stimuli, and are complicated and compounded by associations. Burke for instance, wrote of beauty and sublimity in terms of feelings and passions.[115] Kames's intuitive awareness of the aesthetic modes, on the other hand, bypasses the passions altogether in its knowledge of cause, because awareness of cause does not come about entirely through the external senses (see chart). Yet the internal senses still relate to the emotions and to the physical character through the associative principles.[116] Writing of virtue, Kames said,

> But no man hath a propensity to vice as such: on the contrary, a wicked deed disgusts him, and makes him abhor the author; and this abhorrence is a strong antidote against vice, as long as any impression remains of the wicked action.[117]

The associative principles which come into play with regard to virtue, or the abhorrence of vice, are imitation, habit, disapproval, and approval.

The proliferation of aesthetic categories in the subject-oriented mode was accompanied by a basic change in attitude toward the origin of aesthetic pleasure. Beauty was understood by Reynolds and Hogarth to exist either in nature, or in an abstract of nature. Beauty for the subject-oriented writers was seen to be an emotion or feeling of a quality, which may actually exist in nature as it did for Burke; or

it may be compounded in the imagination as it was for Addison and Hume; or it may be caused by a principle analogus to sound and taste with correspondent senses to perceive it as it was for Hutcheson and Kames. Subject-oriented writers acknowledged the complexity of feeling by their creation of numerous modes to supplement beauty.

Subject-oriented definitions of genius, following Addison's pattern, closely corresponded to the distinctions between aesthetic modes. The typically object-oriented attitude toward genius, as we have seen, was that ability could be universally applied to any of the arts and sciences. Reynolds and Johnson both express this theory: Reynolds said that the painter should think like a poet; Johnson thought that a poet could easily have been a painter, mathematician, or scientist under the proper conditions. Both men, and Hogarth as well, were theoretically committed to this position because of their emphasis on the training of the artist. Generally speaking, the subject-oriented attitude defined several kinds of genius which were each suited to a particular type of imagination. Addison, for instance, wrote of the trained and natural genius, and suggested that a specialized type of imagination was necessary for each of the arts and sciences.

The idea of genius, along with its modifications, is also an integral element of the concept of taste which occupied all of the subject-oriented writers. Most of these

men were more concerned with art as it affected the viewer than with art as it was created by the artist. In other words, the topic of genius was very often phrased in terms of appreciative genius (taste) rather than in terms of the artist's creative process or his associational processes. Hipple writes, "the beautiful, sublime, and picturesque being feelings raised up from impressions and associated ideas, it was natural that the mind as perceving rather than creating should have been the focus of discussion."[118] It was probably not so much because aesthetic experience was a feeling, for the implications of this idea were only slowly realized, as it was the fact that analysis was based on the commonality of experience which led to a philosophic focus on the subject, or perceiver. There was certainly more perceivers than creators.

## V

Some of the problems raised by a subject-oriented critical perspective were difficult indeed. Most troublesome of all was the fact that a subjective system of analysis eliminated a fixed standard of good art. Hume made it quite clear that cause, here beauty, could never be discovered by inquiry because man's emotions stood between him and the underlying form of things; reason for Hume was merely a result of the very same thing which caused feelings, that is, stimuli. The lack of a standard of beauty seemed to be reinforced by a growing body of evidence of a wide diversity

of human taste.

The empirical basis for knowledge proposed by Locke and accepted by a whole century of British philosophers left those followers on the horns of a dilemma. Locke's system was analytical; he reduced experience to its most elemental parts which he called primary and secondary qualities. Only the primary qualities were real in the sense that they inhered in matter; secondary qualities were merely created in the mind upon its contact with things--a very subjective process since the principle of association left open the way for so many individual variations. Hume's ideas were the consequences of a development of Locke's suggestions to their conclusion.

Hutcheson offered an interesting solution to the discrepancy between the idea of a universal standard of beauty and the actual diversity of taste. The object-oriented critics had approached the problem of beauty from the standpoint of universal recognition of true beauty--a fixed truth--a position which could not possibly accommodate the rapid influx of styles which were becoming fashionable in circles which should have a unquestionable standard of taste. Hutcheson proposed two types of beauty. Absolute beauty is indeed universal, and established on the very general principles of variety, variety amidst uniformity, and harmony;[119] it is tempered, however, by relative beauty which is variable, and conditional to a number of

associations, only one of which is the perception of absolute beauty.[120] It is the relative beauty which is the concern of the literary and art critic, as well as of the artist.

Hutcheson's solution seems at first to avoid the Lockean difficulty. He proposed a "sense of beauty" which was to perceive beauty in much the same way that the eyes receive color and the ears hear harmony. Yet, his four internal senses are remarkably like the external senses in that they cannot really perceive the underlying quality of things except in terms of "uniformity amidst variety," a characteristic very similar to Locke's extension, motion, volume, and figure. Though for Hutcheson, as for Kames, the internal senses are independent of the external ones, they suffer the same shortcoming of having the same distinction between primary and secondary qualities--if only by implication through the analytical process. In terms of the "dispositional account" defined above, Hutcheson's position, like Locke's, is that the mind cannot prehend the real qualities of things, but can only have ideas of them.

The severe reductionism of the analytical system was not the only problem to plague subject-oriented systems; the tendency to polarize ideas into opposites (and other modes) posed other problems. At the root of this situation is the pain-pleasure dichotomy, which, when followed through its implications, led to the separation of many other

concepts. Because the aesthetic categories were implicitly tied to the distinctions of pain and pleasure, even in the imagination, the terms carried the burden of philosophical difficulties associated with physical experience. The experiences of pain and pleasure, as Burke pointed out, can vary from individual to individual, and thus reinforce the subjectivity of experience and art.

There was also conflict between the enthusiastic and the rational in art; the enthusiastic had gradually become linked with the expression of the sublime, and the rational with beauty. Furthermore, the sublime gradually assumed a superior artistic value to beauty. Addison pointed in this direction when he differentiated between the nobly wild and unrestrained, and the refined, correct, and "broken by rules,"[121] and associated them respectively with the great and with the beautiful. Reynolds recognized the tendency when he defined Michelangelo's art as enthusiastic, and Raphael's as studied. The dualistic concept of man's imaginative nature continued to be a feature of subject-oriented literature throughout the century. Gerard united the fanciful and the reasonable in the imagination, the associative power of the mind; the fancy is that part of the imagination which makes natural connections, while the judgment handles the philosophic relations.[122] (Gerard's distinctions recall Hume's.) The genius, however much he may rely on the fancy, is a relatively rationally conceived

one, for he can only combine impressions, not invent new ideas.

William Duff (1767), who also reflected the dualistic interpretation of the imagination of fancy and reason, enthusiasm and restraint, assigned one kind of genius, the philosophic, to the scientist, and another, the poetic, to the artist. Duff wrote,

> The kind of Imagination most properly adapted to Original Philosophic Genius, is that which is distinguished by REGULARITY, CLEARNESS, and ACCURACY. The kind peculiar to Original Genius in Poetry, is that whose essential properties are a noble IRREGULARITY, VHEMENCE, and ENTHUSIASM.[123]

Duff's terminology sounds remarkably like the creator-oriented Edward Young. His emphasis is on originality and newness, not on associations recognizable or common to the consensus gentium. We will consider Duff in the next chapter as a creator-oriented critic. His theories, however, do have several elements of subject-oriented ideas in them. The most obvious is this distinction between the two kinds of genius: one is philosophic and rational, the other poetic and enthusiastic. His idea of enthusiastic genius is, as we shall see later, a creator-oriented one.

The dualistic interpretation of artistic imagination had finally led to a conflict between creativity and freedom. Was the artist indeed limited to associations of combined ideas, in itself an analytical process, or could he have the freedom of unique invention? The development of a dualistic interpretation of the imagination had proceeded from the

pain-pleasure basis of experience, through Addison's aesthetic application, through Burke's exposition of human nature and Hume's skeptic approach to knowledge. Later philosophers like Gerard and Duff struggled with the inherent conflict between expression of the creative imagination in its traditional modes, and creative freedom. Nahm, for example, writes that the question of the sublime was raised in the eighteenth-century principally to account for the freedom of the artist to produce novelty.[124] Thus we see that the subject-oriented method attempted to provide answers to some questions posed by the traditional object-oriented criticism--the functions of taste and the appeal of the irregular and "nobly wild"; the question of creative freedom; and the question of the relationship of art to external nature and to man's nature. These problems could not be fully resolved by a subject-oriented approach. The creator-oriented mode had an answer for many of these problems--or rather a non-answer--for it did not attempt to analyze the creative process, but called it inspiration, intuition, a gift of the muses, or a gift of God.

## FOOTNOTES TO CHAPTER IV

[1]Joseph Addison, Richard Steele and others, The Spectator, 5 vols., ed. Donald F. Bond (Oxford: Clarendon Press, 1965), vol. 3:452 (said with reference to the mutual sexual attraction within the species).

[2]Katherine Everett Gilbert and Helmut Kuhn, A History of Esthetics (New York: Macmillan, 1939), p. 233.

[3]Addison, 3: no. 412, pp. 542-543.

[4]Ibid., 3:543-544.

[5]Henry Home, Lord Kames, Elements of Criticism, 2 vols., 8th ed, (London: Vernor and Hood, 1805), 1:161-2, 171.

[6]Francis Hutcheston, An Inquiry Concerning Beauty, Order, Harmony, Design, ed. Peter Kivy (The Hague: Martine Nijhoff, 1973), pp. 12-13. In his introduction Kivy notes that Locke's addition to the fourth edition of the Essay Concerning Human Understanding of a chapter called "Of the Association of Ideas" had a profound effect on eighteenth-century ideas of taste. In this section Locke distinguished between two types of connections of ideas, one a natural connection, and the other a chance association. The chance association may join ideas that "in themselves are not all of kin." John Locke, An Essay Concerning Humane Understanding, 2 vols. ed. Alexander Campbell Fraser (Oxford: Clarendon Press, 1894), 1:529.

[7]Additional modes of aesthetic qualities, the picturesque, and the ridiculous, among others, were added later in the century.

[8]Alexander Gerard, An Essay on Taste Together with Observations Concerning the Imitative Nature of Poetry, ed. Walter J. Hipple (Gainsville, Fla.: Scholar's Facsimilies and Reprints, 1963), reproduction of the 3rd ed. (1780), p. xi. Hipple points out in his introduction that two major methodologies in eighteenth-century criticism use what he terms the "dialectical orientation" and the "literalist and atomistic approach". The former is characterized by an arrangement of principles in polar contraries which are treated on "lower" and "higher" levels. The good and bad, general and particular, beautiful and bad, as well as the hierarchical elements of Reynolds's theory fits Hipple's "dialectical" class. The "literal philosophies," he writes, study cause and effect sequences; the "atmostic" type of philosophy tends to reduce complexities to simple elements. Yet in spite of this scheme set up by Hipple, we can see that the subject-oriented critics, who are "literalists" and "atomists" did analyze in terms of opposites, or at least contrary modes, within a sequential methodological framework.

[9]M. H. Abrams, The Mirror and the Lamp: Romantic Theory and the Critical Tradition (Oxford: Oxford Univesity Press, 1953; reprint ed. Oxford: Oxford University Press, 1971), pp. 14-15.

[10]Basil Willey, The Eighteenth-Century Background: Studies of the Idea of Nature in the Thought of the Period (New York: Columbia University Press, 1940), p. 137.

[11]Abrams, pp. 14-20.

[12]David Hume, The Philosophical Works, 4 vols. ed. Thomas Hill Green and Thomas HodgeGrose, vols. 3 and 4: Essays: Moral, Political, and Literary (London, 1882; reprinted; Germany: Scientia Verlag Aalen, 1964), 3:268.

[13]C. D. Broad, "Some Reflections on Moral-Sense Theories in Ethics," reprinted in Readings in Ethical Theory, eds. Wilfred Sellers and John Jospers (New York: Appleton-Century Crofts, 1952), pp. 368-269.

[14]Ibid., p. 370. Kivy is also of the opinion that sight may be considered as one of the pertinent senses when taken in the context of Lockean aesthetics, p. 17.

[15]Thomas Hobbes, Leviathin, ed., Herbert W. Schneider (Indianapolis: Bobbs-Merrill Co.; The Library of Liberal Arts, 1958), p. 25.

[16]Ibid.

[17]Sir Joshua Reynolds, Discourses on Art, Robert R. Wark, ed. (New York: Macmillan & Henry E. Huntington Library & Art Gallery, 1959; Collier Books reissue ed., 1966), Discourse III:46-47; hereafter cited with discourse number and page reference.

[18]Ibid.

[19]Locke, Essay, 1:37-38, 302-303.

[20]For a summery of Addison's contribution to the sublime see: Samuel Holt Monk, The Sublime: A Study of the Critical Theories in Eighteenth-Century England (New York: Modern Language Association of America, 1935; reprint ed., Ann Arbor: University of Michigan Press, 1960).

[21]Addison, 3: no. 421, p. 579.

[22]Ibid., number 160, 2:126-127.

[23]Ibid., number 412, 3:540.

[24]Ibid., number 412, 3:542.

[25]Ibid., number 412, 3:544.

[26]Ibid., number 412, 3:542-543.

[27]Ibid., number 415, 3:533. He writes of architecture that it causes pleasures by the direct sight of volume and size.

[28]See quote at the head of this chapter.

[29]Locke, 1:169-175.

[30]Ibid., 1:179-180.

[31]Addison, 3: no. 411, p. 537.

[32]Ibid., number 416, 3:559-560.

[33]Ibid., number 414, 3:548.

[34]Ibid., number 415, 3:553.

[35]Diderot's fascimation with blindness and the imagination can be seen in his Lettres sur les sourds et mutes. Berkley and Reid developed complex theories of sight; and Gerard's idea ofbeauty can be comprehended only through vision and memory.

[36]Addison, 3, no. 411, p. 537.

[37]Ibid., number 416, 3:559.

[38]supra, p. 305.

[39]Walter H. Hipple, The Beautiful, the Sublime, and the Picturesque in Eighteenth-Century British Aesthetic Theory (Carbondale: Southern Illinois University Press, 1957), p. 68. Hipple's summary of Gerard's system is based on the Essay on Taste and An Essay on Genius; as the latter work is scarce Hipple provides several passages from the text.

[40]Hume, Essays, 3:268.

[41]Ibid., 3:270.

[42]Kames, who made an effort to unite psychology with traditional criticism, used numerous specific examples. Those who addressed the problem of historigraphy, such as Blair, also relied on examples.

[43]Addison, 3: no. 411, p. 537.

[44]Ibid.

[45]Ibid., number 412, 3:538.

[46]Ibid., number 416, 3:559-560.

[47]Ibid., number 412, 3:561.

[48]Ibid., number 414, 3:550-551.

[49]Ibid, number 413, 3:547.

[50]Addison was perhaps limited by current modes of expression. He implied that the great, beautiful and novel are found in objects; he also referred to harmony and order.

[51]See quotes, supra, p. . (this chapter refers to text, notes 23, 24, 25).

[52]Edmund Burke, A Philosophical Inquiry into the Origins of Our Idea of the Sublime and Beautiful, J. T. Boulton, ed. (New York: Columbia University Press, 1958), pp. 11-27.

[53]Ibid., p. 13.

[54]Ibid.

[55]Ibid., pp. 13-16.

[56]Ibid., p. 17.

[57]Ibid.

[58]Ibid., pp. 19-21.

[59]Ibid., pp. 57-70, et passim.

[60]Ibid., p. 91, 110, et passim.

[61]Ibid., pp. 39-40, 42-44.

[62]Ibid., pp. 35-37, 44.

[63]Ibid., pp. 50-51.

[64]Hume, Essays, 4:13.

[65]Ibid., pp. 13-17.

[66]Ibid., pp. 16-17.

[67]Ibid., p. 17.

[68]Ibid., p. 24.

[69]Ibid., p. 21.

[70]Ibid., p. 18.

[71]Hume, Essays, 4:236-240.

[72]Ibid., 4:238.

[73]Ibid., 3:268.

[74]Hutcheson, Inquiry, pp. 34, 74, for the internal sense of beauty; for the other internal senses see Hutcheson, Essay on Natural Conduct of the Passions and Affections (London, 1728), pp. 5-6.

[75]Hutcheson, p. 80.

[76]Ibid., p. 79.

[77]Ibid., p. 24.

[78]Ibid.

[79]Ibid., pp. 39-47.

[80]Ibid., p. 54.

[81]Ibid., p. 31.

[82]Kames, 1:27-28.

[83]Kames did not fit his internal senses into a philosophical system; they are called upon throughout the work when needed to explain a phenomenon. Hipple notes that Kames shared a trait with the entire Scottish school, that is, the tendency to reduce every phenomenon to a particularly suited sense (The Beautiful, p. 100).

[84]Kames, 1:170.

[85]Ibid., 1:171.

[86]Ibid.

[87]Gerard, p. 183.

[88]Ibid., p. 151.

[89]Ibid., pp. 145-148n.

[90]Ibid., p. 149.

[91]supra, p. 218.

[92]Monk's history of the idea of the sublime traces the growth and development of the concept and Addison's contributions to it, supra, p. 262, 20N.

[93]Addison, 3: no. 421, p. 579.

[94]Ibid., number 418, 3:566-567.

[95]cf flow charts.

[96]Addison, 2: no. 160, p. 127.

[97]Ibid., number 417, 3:564.

[98]Ibid., number 160, 2:129.

[99]Ibid.

[100]Ibid., number 409, 3:529.

[101]Ibid.

[102]Ibid., number 409, 3:528.

[103]Ibid., number 409, 3:525.

[104]Ibid., number 420, 3:574.

[105]Monk, see especially pp. 43-62.

[106]Ibid., pp. 70-72.

[107]Burke, pp. 112-117.

[108]supra, p. 205.

[109]Monk , pp. 109-109. The exact philosophical history of the picturesque is a subject of controversy. Hipple gives a brief survey of the work which has been done on this mode in the context of the eighteenth century in the final chapter of The Beautiful, pp. 303-320.

[110]Gerard, p. 69.

[111]Ibid., p. 62.

[112]Ibid., p. 56.

[113]Ibid., p. 47.

[114]Ibid., pp. 146-147n

[115]Burke, pp. 57, 91.

[116]Kames, 1:53.

[117]Ibid., pp. 53-54.

[118]Hipple, p. 309.

[119]Hutcheson, pp. 40-41.

[120]Ibid., pp. 54-59.

[121]Addison, 2: no. 160, p. 127.

[122]Gerard, p. xx, quoted by Hipple in the introduction from Gerard's Essay on Genius.

[123]William Duff, An Essay on Genius, John L. Mahoney, ed (Gainsville, Fla.: Scholar's Fascimilies and Reprints, 1964), pp. 96-97.

[124]Milton C. Wahm, Genius and Creativity: An Essay in the History of Ideas (New York and Evanston: Harper & Row, Harper Torchbooks, 1965). 1st ed. pub. in 1956 under title: The Artist as Creator, pp. 141-143.

# CHAPTER V

## THE CREATOR ORIENTATION

> Learning we thank, Genius we revere; That gives us pleasure, This gives us rapture; That informs, This inspires; and is itself inspired: for Genius is from Heaven, Learning from Man: This sets us above the low, the illiterate; That above the learned, and polite. Learning is borrowed knowledge; Genius is knowledge innate, and quite our own.[1]

The changing critical attitude in eighteenth-century British thought can be illustrated not only by new definitions of nature and the proliferation of modes of aesthetic experience, but by new definitions of art as well. Object-oriented critics tended to look at art in terms of its representation of nature; subject-oriented critics generally analyzed art as a stimulus which caused an association of ideas (effect) in the mind of the subject who experienced it. (Associationalism, as I pointed out in the last chapter, is founded on Hobbes's theory that ideas are caused by the impression of sense data on the mind; the mind combines the the impressions to form thought. Locke added the idea that pain and pleasure serve to fix ideas in the mind.) Creator-oriented writers saw art in an entirely different light: art was deemed to be an expression of the artist's feeling--an

ebulliton of his innermost character--and an insight into his creative, and sometimes his moral nature. This attitude toward art was a result of the critical focus on a definition of that quality in the artist (genius) which could make art. We shall see that the attitude toward the artist was the major focal point of this orientation; and that usually, other definitions arose from ideas about the creative qualities.

The creator orientation has three major features which will be discussed in this chapter: (1) genius is defined as a creator of art, who has a power which is often identified with a "universal plastic nature", (2) the artist and his art are defined as particular rather than general, (3) the message or symbols of art as they are represented in a medium are but a small part of what is in the artist's mind--in other words, his idea cannot be fully expressed in words (or in pictures). All of these ideas will be found in some degree or another in each of the creator-oriented writers to be discussed here. As was the case for the other orientations, intrusions upon a pure orientation can be found in the form of various ideas which do not fit the main pattern; yet each of the writers selected for this part of the study, Shaftesbury, Young, Duff, and Blake, was obviously basically concerned with the character of the genius. It should also be noted that this perspective is a subjective one, as was the one previously discussed: the variables in the subject-

oriented mode were taste, sensibilities, and associations of ideas within the subject; the variable in the creator-oriented mode is the creative power of the artist.

In order to clarify the creator orientation and to identify it as a distinct mode of thought we will discuss the ideological context of the mode, the two extreme statements of the mode as represented by Shaftesbury and Blake (see outline in chapter two), and each of the three characteristics just mentioned.

## I

Abrams writes that "the year 1800 is a good round number" to mark the displacement of mimetic and pragmatic interpretations with the expressive.[2] It will be remembered that there is a similarity between Abrams's mimetic-pragmatic-expressive orientations and in object-subject-creator modes.[3] Abrams, however, sees the "expressive" as the orientation of the nineteenth-century Romantic theory rather than as a specific expression of eighteenth-century thought. He writes, for instance, that examples of the expressive are isolated in history, and that even Wordsworth's theory is "embedded in a traditional matrix of interests and emphasis."[4] The creator orientation, as defined here, is indeed an eighteenth-century critical mode which can be seen in its full expression in Shaftesbury, Edward Young, William Duff, and Blake. Some features of this mode can also be identified in a number of other eighteenth-century works as in intrusion

upon the writers' major critical mode. Such are the writings of Gerard, Kames, Blair, and Reynolds. These critics exhibited some features of the creator orientation because it grew out of some of the same trends which caused their basic critical attitudes. All of these critical attitudes eventually flowed together toward the end of the century to mark, as Abrams said, the end of the dominance of two modes and the predominance of another, which for Abrams means the beginning of Romanticism. The creator mode is not Romanticism, but Romanticism is a result of a creator orientation.[5] The critical point of view should not be confused with artistic style, which as we have seen in chapter one, is determined by content and by form. The content and form, however, can be influenced by the artist's perspective.

In the opening years of the century Shaftesbury spoke of the poet in terms of inspiration and feeling rather than reason;[6] as we shall see he was a classicist like Pope to the extent that he felt that the harmonious goodness of nature, rather than the passionate appetites guide the artist's (and all men's) actions. In mid century Edward Young wrote in warm tones about poetic enthusiasm, originality, and mystery. Less than a decade later, William Duff echoed the same sentiments. In the last quarter of the century Blake was writing poetry by divine (or demonic) dictation and had devised a new engraving process with the help of a dead brother who appeared to him in a vision.[7]

The attitude which directed attention toward the artist seems to have risen from several different sources in the eighteenth century. Although Shaftesbury was the student of the associationalist-empiricist Locke, his philosophy stemmed from the Cambridge Paltonists. Edward Young showed the eclectic influences of Addison, Shaftesbury, and perhaps Johnson. Duff seems to have had a copy of Addison in one hand and Young in the other. Blake's opinions were raised in the form of rebellion against almost everyone, although he would have agreed about certain points in Shaftesbury's and Young's ideas.

Shaftesbury's contemporaries, notably Addison, attempted to answer critical problems within the empiricist framework put forward by Hobbes and Locke; even the Earl's own protoge Hutcheson resorted to the associationalist pain-pleasure dichotomy to resolve the appeal of art and nature, and fitted his mentor's internal sense theory into this mechanistic scheme. Shaftesbury himself, as we shall see later, saw in Locke's sensationalistist foundation of knowledge a definite threat to virtue and order. The problem simply stated is that if ideas are impressed on a tabula rasa then moral concepts are a matter of chance association rather than knowledge of right and wrong. Shaftesbury rejected associationalism in favor of older ideas. Burrows maintains that the influence of the classics on Shaftesbury can be followed in detail in a set of exercises which he wrote

prior to his published works.[8] Ancient sources are marginally cited in his manuscripts; contemporary sources were not so noted, but Burrows states that the ideas show the influence of Descartes, Hobbes, and the Cambridge Platonists.[9]

The Cambridge Platonists were a school of philosophers centered at Cambridge University inthe seventeenth century who answered the mechanism of Hobbes with an interpretation based on Platonism mixed with Christianity. This spiritualistic world view was an attempt to render Christian truths and scientific facts compatible. Brett says that the platonic view of this school was that this world is a symbolic representation of the spiritual world.[10] Shaftesbury adopted this idea and interpreted it on the level of human nature: the world of human nature is a copy of the "larger universe," the world of the creator. The element in this philosophy which Shaftesbury drew upon was the active anima mundi principle which proposed to explain purposive behavior, growth, and change--features which the mechanistic world view failed to account for.[11]

Brett maintains that the vital active capacity (connatural) of the mind was Shaftesbury's particular adaptation of the Platonists' anima mundi.[12] In the place of "decaying sense," a passive role assigned to the imagination by Hobbes, Shaftesbury proposed the active principle in which the imagination assumes a creative nature, working with truth, beauty, and virtue. These it recognizes in its own mind and in the

mind of the creator.

Like Shaftesbury, Young drew upon a tradition other than Locke's associationalism, and at the same time he rejected the classical interpretation of art and creativity. There are certain elements in Young's Conjectures on Original Composition which indicate his indebtedness to Johnson, Addison, Shaftesbury, and others, and at the same time anticipate Duff and Blake. For his inward directed, self searching criticism, Young seems to have been influenced by Shaftesbury's Advice to an Author: Young wrote,

> Since it is plain that men may be strangers to their own abilities . . . I borrow two golden rules from Ethics, which are no less golden in Composition, than in life. 1. Know theself; 2dly, Reverence thyself.[13]

He wrote further on, "contract full intimacy with the Stranger within thee." As we shall see later, Shaftesbury had expressed the same sentiment about the dual character of man's nature, one side being virtuous, poetic, and of the mind, the other being mean and commonplace.

Showing perhaps the influence of Johnson, Young based his discussion of genius on the differences between imitation (in the Johnsonian sense of the word) and originality. Young, like Johnson, felt that imitation is a form of copying and that it is therefore inferior to originality, or newness. Originality is the product of genius. Young also relied on Addison, further developing his ideas of the two kinds of genius--the natural and the trained--and calling them the adult and the infantine. He made the same

observations and comparisons about these two kinds of genius as had Addison with the addition of the idea of a vegetable nature of poetic genius. Addison's observations, which had been subject-oriented, became creator oriented in Young because his definition of genius concentrated on the originality, enthusiasm, and mystery of creativity. Two brief passages from Young indicate the complete change in tone and emphasis.

> An Original may be said to be of a vegetable nature; it raises spontaneously from the vital root of Genius; it grows, it is not made. . . .[14]

> Genius is a Masterworkman, Learning is but an instrument; and an Instrument, tho' most valuable, yet not always indispensible. Heaven will not admit of a Partner in the accomplishment of some favorite Spirits; but rejecting all human means, assumes the whole glory to itself.[15]

In the last quote Young seems to have divided genius into two categories, the learned and the natural, as Addison had done; but the whole tone really indicated that there is only one kind of poetic genius--the original, or natural. The other category is composed of mere imitators. Young, then was truly ecclectic, blending elements of Johnson's object orientation, Addison's subject orientation, and Shaftesbury's creator orientation into a single essay, which seems to be a creator-oriented critical opinion rather than a critical theory.

Duff's debt (1767) to the subject-oriented type of analysis is much more obvious than Young's use of sundry ideas. One might be tempted at first glance to classify

his as a subject-oriented attitude because of its associationalistic structure, that is, its reliance upon sense data. Duff's use of sensationalism was much more sophisticated than the very early ideas of Addison which Young relied upon. He too divided kinds of genius, but his distinctions were between the scientific, or philosophic, and the artistic. Scientific genius utilizes judgment based on the sense data (as in the subject-oriented mode of criticism), and artistic genius utilizes imagination. Artistic imagination, we discover, is more similar to Shaftesbury's inward knowledge of self than to Johnson's invention. Duff used the terms <u>enthusiasm</u> and <u>inspiration</u> in defining imagination:

> . . . the word ENTHUSIASM, . . . is almost universally taken in a bad sense; and, being conceived to proceed from an overheated and distempered imagination, is supposed to imply weakness, superstition, and madness. ENTHUSIASM, in this modern sense, is in no respect a qualification of a Poet; in the ancient sense, which implied a kind of divine INSPIRATION, or an ardor of Fancy wrought up to Transport, we not only admit, but deem it an essential one.[16]

Blake seems to have drawn upon all of these traditions only to refute them. Genius, he felt, owes nothing to the past as it is <u>entirely</u> self-sufficient.

> Knowledge of Ideal Beauty is Not to be Acquired. It is Born with us. Innate Ideas are in Every Man, Born with him; they are truly Himself. The Man who says that we have No Innate Ideas must be a Fool & Knave, Having No Con-Science or Innate Science.[17]

There are, however, certain features of the thoughts of

Shaftesbury, Young, and Duff which Blake could have agreed with. He approved of some of Reynolds's statements.[18] Several of Shaftesbury's concepts, such as inspiration as an insight into the inner self, the particular nature of art, the plastic creative nature of genius, and the inexpressibility of the whole of the artist's idea, are all compatible with Blake's ideas. Duff's and Young's convictions about the originality, particularity, and inspirational nature of genius are also similar to Blake's ideas.

Thus the ideas of genius characteristic of the creator-oriented mode were drawn from numerous sources. We will examine these ideas which are central to the creator orientation after a look at Shaftebusy, Blake, and Duff in the context of the submodes defined in chapter two. The submodes are distinguished by two distinct ideas of genius: one of kind, one of degree. In one mode represented by Shaftesbury, the genius is believed to have characteristics held to some degree by all men; in the other mode represented by Blake, the genius is believed to be entirely unique.

## II

The differencesbetween Shaftesbury and Blake are so vast that it would seem strange to place them in the same critical system. Indeed, they exemplify two extremes of the creator-oriented attitude, while both Duff and Young represent a moderate position. The artist in Shaftesbury's mind was an archetype for the whole human race; for Blake the

artist was an eccentric who was apparently of a different kind, not just a different degree, from the rest of humanity. Shaftesbury, Blake, and Duff and Young, then, have ideas about genius which represent three degrees on a continuim from an archetype of humans as a class, to an eccentric and irratic creative vehicle. Let us look at these ideas of genius and creativity.

To see the artist as an archetype of the race we have to follow Shaftesbury through a lengthy reasoning process, for the proofs of his theory are to be found in his moral system, his epistemology, and his aesthetic theory. The theory briefly stated is that nature is a symbol of the supreme creator's mind, and art is similarily a symbol of the artist-creator's mind. As the artist is an analogy to God, a "creator of smaller worlds" on a lower plane and is a "just Promethus under Jove," so is man in general an analogy of the artist on yet a lower plane. We can call man a virtuoso, for as we shall see, the concept makes ordinary men understand the artist, just as the artist understands God. Shaftesbury compared the artist with the ultimate creator, saying,

> But for the man who truly and in a just sense deserves the name of poet, and who as a real master, or architect in the kind, can describe both man and manners, and give to an action its just body and porportions, he will be found, if I mistake not, a very different creature [form those poets who possess merely a facility of language]. Such a poet is indeed a second Maker; a just Prometheus

> under Jove. . . . The moral artist who can thus imitate the Creator, and is thus knowing in the inward form and structure of his fellow creature, etc. . . . .[19]

The artist who imitates the universal mind in the act of creating, is understood by the virtuoso who is simply a person who looks inward in order to be able to understand poetical and moral truth. The sense which forms the basis of a virtuoso is essential to the making of an artist.[20] In order to define this sense we must examine Shaftesbury's idea of the foundation of knowledge. Shaftesbury's epistemology is a deinal of his teacher Locke's empiricism, although he went to great pains to avoid direct confutation of the tabula rasa theory and Locke's censure of innate ideas. He wrote to his friend Stanhope,

> Thus I have ventured to make you the greatest confidence in the world, which is that of my philosophy, even against my old tutor and governor, whose name is so established in the world, but with whom I ever concealed my differences as much as possible.[21]

Indeed, we have recourse only to his private letters for a direct disavowal of the innate principles. Shaftesbury felt that Locke was playing into the hands of the Hobbesists in founding his theory of knowledge completely on experience. In the same letter to Stanhope he said that "innate principles" was one of the "childishest" disputes and that Hobbes "had already gathered laurels enough, and at an easy rate, from this field."[22]

In the place of innate ideas, however, Shaftesbury

proposed an inherent capacity to understand more than what is received through the senses. He wrote in a letter to Michael Ainsworth,

> Twas Mr. Locke that struck all fundamentals, threw all order and virtue out of the world, and made the very ideas of these (which are the same as those of God) unnatural, and without foundation in our minds. Innate is a word he poorly plays upon: the right word, tho' less used is connatural, for what had birth or progress of the foetus out of the womb to do in this case? the question is not about the time the ideas enter'd, or the moment that one body came out of the other; but whether the constitution of man be such, that sooner or later (no matter when) the idea and sense of order, administration, and a God will not infallibly, inevitably, necessarily spring up in him.[23]

It is this connatural capacity which Shaftesbury referred to in other places as an internal sense of right and wrong, a moral sense.

The moral sense--which as we have seen is not an innate idea, but a connatural capacity--is formed when the mind reflects upon the sense impressions. By means of this reflected sense the mind naturally forms ideas about actions and makes moral judgments upon them.

> So in behavior and actions, when presented to our understanding, there must be found, of necessity, an apparent difference, according to the regularity or irregularity of the subjects. . . .
>
> Thus the several motions, inclinations, passions, dispositions, and consequent carriage and behavior of creatures in the various parts of life, which readily discerns the good and ill towards the species or public, there arises a new trial or exercise of the heart, which must either rightly and soundly affect what is just and right, and disaffect what is contrary, or corruptly affect what is ill and disaffect what is worthy and good.[24]

It is the same inner sense that makes judgments on beauty. We will see later than one and the same sense is responsible for both judgments because moral qualities (the good) is the same as beauty.

> No sooner the eye opens upon figures, the ear to sounds, than straight the beautiful results and grace and harmony are known and acknowledged. No sooner are actions viewed, no sooner the human affections and passions discerned (and they are most of them as soon discerned as felt) than straight an inward eye distinguishes, and sees the fair and shapely, the amiable and the admirable, apart from the deformed, the foul, the odious, or the dispicable.[25]

Now, the mind is not passive in the Lockean sense as a vehicle which receives sense data and makes combinations of ideas; rather, it is an active principle which is creative in that it can make judgments upon the good and the beautiful independently of the empirically based associations of ideas. One does not, for example, judge something good because it gives pleasure in the Lockean sense, or because it is useful to selfish goals in the Hobbesian sense. This creative, active principle of the connatural is universal. The artist makes use of the creative capacity to make art; the virtuoso makes use of the creative capacity to appreciate art, and to acknowledge the good. The difference between the two is a matter of degree and application as well as of circumstance.

Shaftesbury recognized a difference of degree of capability among men:

> There are some persons indeed so hapily formed by Nature herself, that with the greatest simplicity

> or rudeness of education they have still something of a natural grace and comeliness in their action; and there are others of a better education who, by a wrong aim and injudicious affection of grace are of all people the furtherest removed from it.[26]

He also acknowledged the value of application to art, viz. knowing the good and beautiful through learning.

> 'Tis undeniable, however, that the perfection of grace and comeliness in action and behavior can be found only among the people of a liberal education.[27]

> No more can a genius alone make a poet, or good parts a writer in any considerable kind. The skill and grace of writing is founded, as our wise poet [Horace] tells us, in knowledge and good sense; . . . from those particular rules of art which philosophy alone exhibits.[28]

Those rules of philosophy are learned by the ancient maxim "know theyself."

> No one who was ever so little a while an inspector, could fail of becoming acquainted with his own heart. . . . by constant and long inspection, the parties accustomed to the practice would acquire a peculiar speculative habit, so as virtually to carry about with them a sort of pocket-mirror, always ready and in use. In this, there were two faces which would naturally present themselves to our view, one of them, like the commanding genius . . . the other like that rude, undisciplined, and headstrong creature whom we ourselves in our natural capacity most exactly resembled.[29]

The self inspection, of course, makes one aware of the universal goodness which is inherent in all of nature.

It is obvious that there is a beauty, a good, in the guise of form and action, but this is not independent of man as was the case for Hogarth's "S" curve and Reynolds's "central form." For these latter two critics, the beautiful existed whether or not man was there to appreciate it.

For Shaftesbury, however, man is an integral part of the natural order, and goodness and beauty are an expression of his active mind force. Beauty and goodness, and their discovery, are not based on reason, which power comes from the empirical senses. Such recognition comes instead from within by introspection with the internal eye.

Finally, Shaftesbury's theory included an historical attitude toward the arts which accounted for the different geniuses of different times and places. He felt that the ancients, for example, were masters because they were not afraid to look at the inner self and to reflect their own character in their art.[30] Certain circumstances of a political nature also influence where the arts prosper.[31] Other conditions, such as appreciation by contemporaries and the state of criticism were also noted.[32] Thus, the poet, or artist, in Shaftesbury's mind is creator in a divine sense; his connatural capacities are shared, however, by the whole race. His special degree of ability is a result of "good parts," application, and circumstance.

At first Blake's artist seems to be a world apart from Shaftesbury's. Let us look at the dissimilarities (the similarities, as we shall see, are a plastic imagination, the particularlity of art and of genius, and the inadequacy of artistic symbols). While Shaftesbury's genius had a liberal education and was a man of the world, Blake's genius was wildly irratic and at times at the mercy of his

inspirational daemon. The poem Milton, Blake wrote, was taken entirely "from immediate dictation, twelve or sometimes twenty or thirty lines at a time, without Premeditation and even against my Will."[33] Europe (1794) was also dictated.[34] Blake recognized, as had Shaftesbury, the pernicious effect of empiricism and associationalism upon inspiration. He wrote in the margins of his copy of Reynolds's Discourses,

> I read Burke's Treatise when very Young, at the same Time I read Locke . . . & Bacon . . . on Every one of these Books I wrote my Opinions, & on looking them over find that my Notes on Reynolds in this Book are exactly Similar. I felt the Same Contempt & Abhorrence then that I do now. They mock Inspiration & Vision.[35]

Inspiration and vision were Blake's own poetic method. He continued,

> Inspiration & Vision was then & now is, & I hope will always Remain, my Element, my Eternal Dwelling place. . . .[36]

In an appeal for inspiration he poetically opened the First Book of Urizen with these words:

> Eternals! I hear you call gladly.
> Dictate swift winged words and fear not
> To unfold your dark visions of torment.[37]

While Shaftesbury's genius was, again, cultivated and educated--a gentleman of society--Blake's genius was eccentric, non-social, naturalistic, and primitistic in a Rousseaustic sense. This set of qualities was reflected in Blake's own behavior which was, as Brooks points out, typical of the poete Maudit.[38] Blake's symptoms along with these lines were

these: (1) a conviction of his own inspired genius, (2) his rebellion against society, (3) ungoverned imagination, (4) feelings of rejection by society, (5) conviction that genius must suffer, (6) melancholy, and other traits.[39] Since the poet and artist is to rely on the muses, he is not in need of the imitation of others; thus, Blake despised the Royal Academy and all that it stood for, training, polite society, riches, and "Polite Art." He wrote of the Academy and training:

> Having spent the Vigour of my Youth & Genius under the Oppression of S$^{r}$ Joshua & his Gange of Cunning Hired Knaves Without Employment & as much as could possibly be Without Bread, The Reader must Expect to Read in all my Remarks on these Books Nothing but Indignation & Resentment. While S$^{r}$ Joshua was rolling in Riches, Barry was Poor & Unemployed except by his own Energy; Mortimer was call'd a Madman, & Only Portrait Painting applauded & rewarded by the Rich & Great.[40]

While Shaftesbury respected the value of education, Blake's contempt for training, education--the whole regimin prescribed by Reynolds and generations of classicists--is easily demonstrated in the marginalia to the Discourses. His opinion on this matter was based on the conviction of inspiration as the soul of art, and a theory of innate ideas. The artist cannot add to his stock of artistic ideas and imitate in the sense Reynolds intended; he can only rely upon his own imagination.

> Identities or Things are Neither Cause no Effect. They are Eternal. Reynolds Thinks that Man Learns all that he knows. I say on the Contrary that Man Brings All that he has or can have Into the World

> How very anxious Reynolds is to Disprove & Condemn Spiritual Perception:[42]

> Here [Discourse VII] is a great deal to do to Prove that All Turth is Prejudice, for All that is Valuable in Knowledge is Superior to Demonstrative Science, such as is Weighed or Measured.[43]

Finally, genius for Blake is unique to the artist who possesses it; it is not a quality which is spread among the race, but rather it is granted to individuals. The genius of Michelangelo and of Blake, for instance, is particular, and theirs alone: "Genius dies with its Possessor & comes not again till Another is Born with it."[44] Yet, however unique genius may be, Blake indicated that there is an element of the universal in it, a sort of power or source which inspires those who have it. The prophets of religions partake of this genius, or spiritual inspiration; he wrote in 1798:

> The Religions of All Nations are derived from each Nation's different reception of the Poetic Genius, which is every where called the Spirit of Prophesy.[45]

The basic idea in Blake, however, is that genius is unique to the individual, even though it may be his personal interpretation of the universal genius analogous to the prophetic genius.

Duff's ideas of genius were similar to Shaftesbury's in that genius is a matter of degree. Genius according to Duff was very much like the genius described by the subject-oriented Addison, and the object-oriented Reynolds and Pope. Like these earlier writers, Duff divided genius into two categories along the lines of judgment and feeling,

training, and naturalness. These two kinds of genius, however, are philosophical and poetic, rather than the trained and natural which Addison recognized. This is a very important difference: using the sensationalist structure and the premise of sentiment, or feeling, Duff distinguished a scientific, controlled creativity which was based on judgment of the empirical data of the senses, from a sensitive, enthusiastic and inspired genius. "Philosophers," he said,

> have distinguished two general sources of our ideas; from which we draw all our knowledge, SENSATION and REFLECTION.[46]

He described two kinds of genius, noting that the scientific is marked by accuracy and the poetic by enthusiasm.

> The kind of Imagination most property adapted to Original Philosphic Genius, is that which is distinguished by REGULARITY, CLEARNESS, and ACCURACY. The kind peculiar to Original Genius in Poetry, is that whose essential properties are a noble IRREGULARITY, VEHEMENCE, and EHTHUSIASM.[47]

Duff's solid foundation of genius on sensationalism places his theory in the same sub-mode as Shaftesbury's, though for different reasons. Shaftesbury's genius becomes aware of truth and beauty through introspection and insight; he looks to an inner principle which is shared by the race. Although Duff's genius is fired by poetic inspiration,[48] all imaginations are similarly dependent upon common faculties of the mind which Duff understands in an associationalist framework.

> Imagination is that faculty whereby the mind not only reflects on its own operations, but which assembles the various ideas conveyed to the understanding by the canal of sensation, and treasured up in the repository of the memory, compounding or disjoining them at pleasure; and which by its Plastic power of inventing new associations of ideas, and of combining them with infinite variety, is enabled to present a creation of its own, and to exhibit scenes and objects which never existed in nature.[49]

Thus all minds are similar. The differences are not of kind, but of degree. By degree Duff understands a mixture, a balance of faculties.

> Genius discovers itself in a vast variety of forms, we have already observed, that those forms are distinguished and characterized by one quality common to all, possessed indeed in very different degrees, and exerted in very different capacities; this quality, it will be understood, is Imagination.[50]

Duff's idea of genius was analytical, and if his critical theory were to be based on a consideration of that analysis alone, it would be as subject-oriented as Addison's. However, he allowed the important elements of inspiration, originality, and plastic imagination to raise poetic genius to the creative capacities of Shaftesbury's and Blake's. Only the scientific genius is limited entirely by the empirical data and subjected to reason.

## III

I have pointed out three ideas in particular which were held in common by the four eighteenth-century writers whose critical attitudes were basically creator-oriented: a plastic imagination and originality, the particularity of

art, and the inexpressibility of the complete idea of the artist's mind in symbolic or material form. Each of these will be discussed in turn. As to the first, the most striking similarity among these critics was the use of the word "plastic" with reference to the imagination. In the arts plastic was used in two major senses, that of an active molding princple, and that which was itself passively molded. Shaftesbury used the word in its first sense as an active principle; he wrote about the artist,

> Like that sovereign artist or universal plastic nature, he forms a whole, coherent and porportioned in itself, with due subjection and subordinancy of constituent parts.[51]

The universal plastic nature is an active principle--the creator--and the artist is equated with it in his powers; the principle and its actualization are identical.

The plasticity of nature is the principle of the animi mundi to which the Cambridge Platonists attributed the vital principle of growth in the universe. Ralph Cudworth, one of the Platonists, developed the plastic theory as a creative process of vegetable nature in terms that were applied later to criticism by both Shaftesbury and Young. Cudworth wrote that plastic nature is the principle

> by which vegetables may be severally organized and framed, and all things performed which transcend the power of fortuitous mechanism.[52]

Young also compared the workings of genius with the vegetable world, an analogy which could have been drawn from Addison's concept of the great in natural vistas, but seems

more likely to have come from Shaftesbury's identity of plastic nature and artistic creativity. "An Original," he said, "is of a vegetable nature."

Duff also referred to the plastic nature of imagination, saying that genius is composed of a "PLASTIC and COMPREHENSIVE IMAGINATION, an ACCUTE INTELLECT, and an exquisite SENSIBILITY and REFINEMENT of TASTE,"[53] but of all these

> faculties of which Genius is composed, imagination bears the principal and most distinguishing part, so of course it will and ought to be the predominant one.[54]

Imagination, it will be remembered, is an associative power. That power, however composed of compounding and associating principles of memory, was described by Duff as divine fury with a force of inspiration.

> A glowing ardor of Imagination is indeed (if we may be permitted the expression) the very soul of Poetry. It is the principal source of INSPIRATION; and the Poet who is possessed of it, like the Delphian Priestess, is animated with a kind of DIVINE FURY.[55]

All of these writers, then, referred to the imagination, or genius, in terms of plastic creativity, or as in the case of Young, as a vegetable nature. The particular meaning of plasticity needs to be questioned at this point. Abrams suggests that the eighteenth-century concept of plastic nature was a type of combination of parts; he offers a quote from John Ogilvie to substantiate this position.[56] Olgivie's associative idea of plasticity and creativity does not clarify Shaftesbury's own idea, for Ogilvie fits into

the subject-oriented pattern of criticism with intrusions of creator-oriented ideas.[57] Shaftesbury himself was very clear on the matter of artistic creation: it is, he said, a creation analogous to the universe (and the universe was certainly not created from an association of ideas).

To investigate Shaftesbury's idea of plastic creativity as a realization of artistic method more closely, we need to look at his idea of nature. While we could outline his definition of nature in a format similar to those in chapter three, it would give a false impression of his concept of nature by breaking it into sets of modes which would fit certain critical needs. This is just what Reynolds and Johnson had done because they were more interested in the reflection of nature in art media than in the character of that nature as a symbol of creativity. As a moralist, Shafterbusy was interested first in the goodness of nature, next in the mind of man which could recognize and convey it, and finally in its representation in art. He thus saw nature as a whole system with various manifestations, all of which were natural to it and good as a total system. His ideas of nature are difficult, if not impossinle, to separate from beauty, virtue (the good), the particular, and most important, from an animated principle of creativity--the mind.

Nature in Shaftesbury's theory is comprised of three elements: the principle which makes it, that which appears to the senses, and the mind itself. Each aspect of nature is a

part of a whole; everything in the universe is interconnected in an entirely interdependent system which extends even to the invisible structure.

> Neither man nor any other animal, though ever so complete a system of parts as to all within, can be allowed in the same manner complete as to all without, but must be considered as having a further relation abroad to the system of his kind. So even this system of his kind to the animal system, this to the world (our earth), and this again to the higher world and to the universe.[58]

This type of universal order which binds everything into a whole is proof of an active principle which unifies it.

> Now having recognized this uniform consistent fabric, and owed the universal system, we must of consequence acknowledge a unversal mind, which no ingenious man can be tempted to disown, except through the imagination of disorder in the universe, its seat.[59]

Shaftesbury's universe is a moral one that everything works in a way that is good for its own natural state; likewise the whole system works in a way that is good for the whole.

> For we know that every particular nature certainly and constantly produces what is good to itself, unless something foreign disturbs or hinders it, either by overpowering and corrupting it within, or by violence from without. . . . If, therefore every particular nature can be thus constantly and unerringly true to itself, and certain to produce only what is good for itself and conduction to its own right state, shall not the general one, the nature of the whole, do full as much?[60]

Now, since the whole is good, it is also beautiful. Here Shaftesbury shows admiration for the irregular things in nature as well as what most people considered the ugly in nature, mountains, craggs, snakes, monsters.

> All ghastly and hideous as they appear, they want not their peculiar beauties. The wildness pleases. . . . We view her in her innermost recesses, and contemplate her with more delight in these original wilds than in the artificial labyrinths and feigned wilderness of the palace. The objects of the place, the scaly serpents, the savage beasts, and poisonous insects, how terrible soever, or how contrary to human nature, are beautious in themselves, and fit to raise our thoughts in admiration of that devine wisdom, so far superior to our short views.[61]

All of this that is laid to the eyes is beautiful and good. It is also an emanation of the divine author of the universe; it is, he wrote, but a "faint shadow of that first beauty."[62] The individual is also a faint shadow, or part of that original mind which made the universe. The self is

> a real self drawn out and copied from another principle and original self (the Great One of the World), I endeavour to be really one with it, and comfortable to it so far as I am able. I conconsider that, as there is one general mass, one body of the whole, so to this body there is an order, to this order a mind. . . .[63]

It is this mind of the universe, and of the artist which is an active, creative force--a principle that realizes the good and beautiful. This force creates the universe, one of the larger world, and the other of a smaller world--the world of art. The universal artist has the power to form the original of the universe; the artistic mind partakes of the same kind of originality in its creation of the arts. The active plastic mind of the artist contemplates its inner self in order to create the originals of art; it is limited only by the principle of its inner self, which is good and beautiful.

The artist has the choice of copying after the one self which is external, or creating from that which is internal, thus making an original. And that plastic principle of the mind is the most beautiful, it is superior to the things it creates, just like the universal creator is superior to the world it creates.

> Of all forms, then . . . those . . . are the most amiable, and in the first order of beauty, which have a power of making other forms themselves.[64]

Following this line of reasoning we can see that the superior beauty is the mind (goodness); next in order is the life, the body which can create other life; finally the arts and innert matter have a beauty which is inferior to the former two.[65] It is then the innate, the creative, the plastic imagination on which Shaftesbury's criticism is centered.

Neither Young nor Duff was as systematic as Shaftesbury in his critical opinions, but each reflected the same attitude concerning the originality of the artistic imagination and focused upon it rather than that which was produced by it, or upon how one reacted to it. Young wrote, "I begin with Original composition," but he was actually concerned with original imagination. The "original" is of a vegetable nature. He turned to a discussion of the maker of that original rather than to the characteristics of art. He wrote that what we mean by genius is

> the Power of accomplishing great things without the means generally reputed necessary to that end. A Genius differs from a good Understanding, as a Magician from a good Architect; That raises his structure by means invisible; This by the skillful use of common tools. Hence Genius has ever been supposed to partake of something Divine.[66]

Young's genius, like Shaftesbury's genius, draws upon his own inner power of creativity. He does not need rules, guides, for they "like Crutches are a needful Aid to the Lame, tho' an Impediment to the Strong."[67] Young, like Shaftesbury, advised the author to draw upon the inner self for inspiration. Know and reverence thyself, he said so "as to prefer the native growth of thy own mind."[68] The force of the creative mind is the source of originality; he worte in words which could have been inspired by Shaftesbury,

> Therefore dive deep into thy bosom; learn the depth, extent, bias, and full fort of thy mind; contract full intimacy with the Stranger within thee; excite, and cherish every spark of Intellectual light and heat, however somothered under former negligence, or scattered through the dull, dark mass of common thoughts; and collecting them into a body, let they Genius rise (if a Genius thou hast) as the sun from Chaos; and if I should then say, like an Indian, worship it. . . .[69]

In the same vein as Shaftesbury and Young, Duff said, "the artist must draw all his stores from himself."[70] The knowledge or power from the self may be in the form of inspiration, of which Duff said,

> ORIGINAL GENIUS will naturally discover itself in visions. This is a species of fiction, to succeed in which with applause, requires as much poetic Inspiration as any other species of composition whatever. That Enthusiasm of Imagination, which we considered as an essential characteristic of original Genius, is indispensibly necessary to the enraptured Bard, who would make his Readers feel

> those impetuous transports of passion which occupy and actuate his own mind.[71]

Thus, Duff's genius, like Shaftesbury's and Young's, had to rely on the original creative force of his own mind, a force which was realized when he contemplated it in the language of Shaftesbury and Young, or when he relinquished himself to it in Duff's terms.

Blake referred to the imagination in the same metaphoric language as Young; he referred to the powers of artistic creativity as an innate capacity comparable to vegetable life, "Man is Born like a Garden ready Planted & Sown."[72] The production of the artist's mind is also more than the sum of everything that he knows. He is thus able to create from within to make things and ideas in an original fashion.

> Man's perceptions are not bounded by organs of perception; he perceives more than sense (tho' ever so accute) can discover. Reason, or the ratio of all we have already known, is not the same as it shall be when we know more.[73]

Genius, then, for all of these creator-oriented critics depended on an inner quality which was derived from something other than the external senses. It did not depend on a study of nature or of past art; it did not depend on a superior ability to combine and contrast ideas. Rather, it was a plastic forming power which originated in the mind of the artist.

## IV

All of these creator-oriented writers emphatically denied the central issue of the object-oriented attitude that good art is a generalization, an abstract, or the non-particular. Shaftesbury and Blake especially brought up this issue again and again; they equated the sublime with the particular. The subject-oriented Burke had equated sublimity with obscurity. It must be noted, however, that neither Shaftesbury nor Blake recognized the sublime as a distinct aesthetic category; it was for them a superior form of beauty.

Shaftesbury's philosophy was built upon the particular. The particular being is a special aspect of the mind of the creator; not only does it work toward its own good, toward the good of its species, and the good of the whole universe, it is beautiful in its own right. Its beauty arises from its innate goodness. The particular beauty of a thing, animate or inanimate, is exceed by the beauty of a particular being, and in turn by the particular mind. Shaftesbury's critical opinions were consistent with his philosophical opinions. Contrary to the generally accepted attitude of his time, he felt that the particular, rather than the general, should be the subject of art. This held true for painting as well as for literature.

In painting, Shaftesbury acknowledged that portraiture should represent the particular man, a position which he did

not have to defend to his contemporaries. He disagreed with many on the issue of drapery; he believed that moderns should be represented as moderns in dress and in manners. Writing about the custom of painting men in general costume he said,

> the poor pencil-man is put to a thousand shifts, whilst he strives to dress us in affected habits, such as we never wore; because should he paint us in those we really wear, they would of necessity make the piece to be so much more ridiculous as it was more natural and resembling.[74]

We should not be afraid to look at ourselves as we are he said. Then paint the moderns in modern dress. Also be not afraid to depict modern habits of thought and action.

> Our commerce and manner of conversation which we think the politest imaginable, is such, it seems, as we ourselves cannot endure to see represented to the life.[75]

As the painter should paint specific manners and habits of dress, the modern writer,

> whoever he be, amoung us moderns, who shall venture to bring his fellow-moderns into dialogue, must introduce them in their proper manners, genius, behavior and manner.[76]

Shaftesbury's idea of particular human nature is very different from Johnson's general nature, and Reynolds's central form.

Since all of the parts of nature are good and beautiful, each particular is deserving of aesthetic attention. He gives himself over to the appeal of the wild and rugged, and the particular on this philosophy.

> I shall no longer resist the passion growing in me for things of a natural kind, where neither art nor the conceit or caprice of man has spolied their genuine order by breaking in upon that primitive state. Even the rude rocks, the mossy caverns, the irregular unwrought grottos and broken falls of waters, with all the horrid graces of the wilderness itself, as representing Nature more, will be the more engaging, and appear with a magnificence beyond the formal mockery of princely gardens. . . .[77]

Shaftesbury's taste for the naturalness of untamed vistas is similar to Dennis's, Addison's, and Burke's, but it is founded on a different principle, that is, on the innate goodness of the particular.

Young made two short remarks about the ideas of the general and the particular. His definition of originality, like Duff's later, implied particularlity in both art and in creative imagination. He wrote, "and as for a general Genius, there is no such thing in nature; A Genius implies the rays of the mind concenter'd, and determined to some particular point."[78] In writing of imitation he reflected some of Johnson's ideas on the matter, viz, that imitation has ill effects (he named three), but he went much further than Johnson in his emphasis on originality and countered him on the issue of generality:

> She [Nature] brings us into the world all Originals: No two faces, no two minds, are just alike; but all bear Nature's evident mark of Separation on them. Born Originals, how comes it to pass that we die copies? That medling Ape Imitation. . . .[79]

Duff's emphasis on originality was similar to Young's, with the same implication that the products of originality

are particular in nature. "That vivacity of description," he wrote, "which we have observed to be characteristical of a great Genius, will in the writings of an original one be of a kind peculiar and uncommon."[80] This original genius is characterized by "an IRREGULAR GREATNESS, WILDNESS, and ENTHUSIASM of Imagination."[81] Upon an examination of these properties we see that all of these features of original genius are constituted of particularities. Wildness, for example, "an infallible proof of a fertile and luxuriant fancy,"[82] is

> formed by an arbitrary assemblage of the most extravagant, uncommon, and romantic ideas, united in the most fanciful combinations; and is displayed in grotesque figures, in surprising sentiments, in picturesque and inchanting description.[83]

Duff's own enthusiastic language describing original genius is interesting.

> Ordinary minds seldom rise above the dull uniform tenor of common sentiments, like those animals that are condemned to creep on the ground all the days of their life; but the most lawless excursions of an original Genius, like the flight of an eagle, are towering, though devious; its path, as the course of a comet, is blazing, though irregular; and its errors and excellencies are equally inimitable.[84]

Blake was even more adamant about the particularity of art and genius than Shaftesbury, Young, and Duff. In his annotations to Reynolds he criticized the general and the central form again and again. "To generalize," he commented,

> is to be an Idiot. To Particularize is the Alone Distinction of Merit. General Knowledges are those Knowledges that Idiots possess.[85]

And again he wrote, "Minute Discrimination is not Accidental. All Sublimity is founded on Minute Discrimination."[86] Where Reynolds wrote that mere facility in neat imitations do nothing more than amuse--that the artist must endeavor to improve the particularities of nature by the grandeur of his imagination--Blake countered with, "Without Minute Natness of Execution the Sublime cannot Exist! Grandeur of Ideas is founded on Precision of Ideas."[87] Blake's concept of the sublime as precision and clean out line was certainly different from Burke's obscurity.

As for Reynolds's idea that particularities are accidental deviations from the central form, the intent of nature, Blake said,

> One Central Form composed of all other Forms being Granted, it does not therefore follow that all other Forms are Deformity. All Forms are Perfect in the Poet's Mind, but these are not Abstracted nor Compounded from Nature, but are for Imagination. What is General Nature? is there such a Thing? What is General Knowledge? is there such a Thing? Strictly Speaking all Knowledge is Particular.[88]

Blake then believed that genius, art, and ideas are particular, each, one of its kind. It was of course for this reason that the artist had to rely upon his own imagination for his materials. In his Annotations to Lavater he underlined the phrase Who can produce what none else can, has GENIUS,[99] in apparent concurence with the idea. Shaftesbury, Duff, Young, and Blake all agreed upon the point of particularity although each drew upon a different tradition and used different language to express the point. Parti-

cularity was for each of these critics an expression of original and plastic genius.

V

The inexpressibility of art, witnessed to by all of these creator-oriented writers, was more than the je ne scay quoy so often used in the seventeenth and eighteenth centuries to indicate something in art which is appealing yet unidentifiable. Shaftesbury himself used the term to indicate something in art which the viewer or reader could not identify. At the same time he had a theory that although the writer should be fully aware of his idea, he may have difficulty in conveying its totality to the audience.

> However difficult or desperate it may appear in any artist to endeavour to bring perfection into his own work, if he has not the least idea of perfection to give him aim he will be found very defensive and mean in his performance. Though his intention be to please the world, he must nevertheless be . . . above it . . . the rest of mankind feeling only the effect whilst ignorant of the cause, term the je ne scay quoy, the untelligible; or the I know not what, and suppose to be kind of charm or enchantment of which the artist himself can give no account.[90]

This passage appears to indicate that even though the artist is aware of his own clear ideas of beauty he may not be able to fully express their totality in symbolic form. This kind of interpretation is perfectly compatible with the rest of Shaftesbury's philosophy. Nature, he said, is a symbol of the creator's mind, yet the entirety of that mind and of that idea is not clearly and completely understandable in the symbolic form of material nature. By analogy, art is

a symbol of the artist's mind, and that expression is likewise but a faint shadow of its own cause. Let us follow Shaftesbury through the arguments.

Shaftesbury discovered three types or orders of beauty, thy highest form of which is the mind of God who fashioned all things in nature--forms, as well as the mind of man. The hierarchy of beauty from bottom to top is: (1) inert matter including inaminate forms and art, (2) aninate forms which can recreate their own kind, and in the case of man, can make art, (3) the source of all things material and of other formings mind, the mind of God.

> Do you not see . . . that you have established three degrees or orders of beauty? And How? Why first, the dead forms, as you properly have called them, which bear a fashion, and are formed, whether by man or Nature, but have no forming power, action, or intelligence. Right. Next, and as the second kind, the forms which form, that is, which have intelligence, action, and operation . . . [You have] discovered that third order of beauty, which forms not only such as we call mere forms but even the forms which form.[91]

The mind of God which makes all other minds and matter itself it not only the highest beauty, it is also the source of all beauty.

> For we ourselves are notable architects in matter, and can show lifeless bodies wrought into form, and fashioned by our own hands, but that which fashions even minds themselves, contains in itself all the beauty fashioned by those minds, and is consequently the principle, source, and fountain of all beauty.[92]

All of these lower forms and minds of beauty which were

fashioned by the mind of God are but faint shadows of the original; "For if we may trust to what our reasoning has taught us, whatever in Nature is beautiful or charming is only a faint shadow of that first beauty."[93]

The same is true in art as in nature. Beauty is more than what is represented in material form, and its manifestations are but a faint shadow of their originals represented in actions. Art, he said is of the lowest order of beauty,[94] but there is a higher beauty which can be discovered--sentiments--which are revealed in actions. There is a beauty superior to

> those fabrics of architecture, sculpture, and the rest of the sort of the greatest beauties which man forms. . . .
>
> . . . you sentiments, your resolutions, principles, determinations, actions; whatever is handsome and noble in the kind; whatever flows from your good understanding, sense, knowledge, and will; whatever is engendered in your heart . . . or derives itself from your parent-mind. . . .[95]

This divine beauty of the inner self which is revealed in action, sentiment, and resolution is not at first apparent to the perceiving mind, nor is it ever fully realized in symbolic form by its author. It is discovered by an inner eye, through the method of dialogue, and realized in a life style of the artist who is the "architect of his own life and fortune."[96] We can see here that the artist is not only one who forms matter, but one who acts virtuously, thinks virtuously, who is indeed a virtuoso. He said that

"Everyone is a virtuoso of a higher or lower degree."[97] Thus, although beauty may exist in the mind of its author, whether artist or virtuoso, it is never fully expressed in symbol, just as nature is not a full symbolic expression of the original Mind because the limitations of material and symbol are inadequate to the power of the forming principle of plastic creativity.

Young went much further than Shaftesbury on the matter of the unknown in art; he called it a "mystery" which even the artist might not understand. As we have seen, Young's idea of the artist as two persons was similar to Shaftesbury's distinction between the inner self and the material self. Young also drew upon this inner self for poetic inspiration. Whereas Shaftesbury's author was aware of the moral--the beautiful mind--Young's poet was likely as not unaware of his full powers.

> There is something is poetry beyond Prose-reason; there are Mysteries in it not to be explained, but admired.
>
> Nor are we only ignorant of the dimentions of the human mind in general, but even of our own. . . . A man may be scarce less ignorant of his own powers, than an Oyster of its pearl, or a rock of its diamond. . . . Few authors of distinction but have experienced something of this nature. . . .[98]

Duff, like Shaftesbury before him, and Blake after him, felt that the artist was hampered by the limitations of his medium in the expression of his idea. It is for this reason, for example, that the artist will resort to figurative and metaphorical speech.

> The ordinary modes of speech being unable to express the grandeur of the strength of his conceptions, appear FLAT and LANGUID to his ardent Imagination. In order therefore to supply the poverty of common language, he has recourse to METAPHORS and IMAGES; which, though they may sometimes occaion the want of percision, will always elevate his style, as well as give a peculiar dignity and energy to his sentiments.[99]

This uncommon use of language may cause the reader to attribute obscurity to the author's meaning.

> An original Author indeed will frequently be apt to exceed in the use of his ornament, by pouring forth such a blaze of imagry, as to dazzle and overpower the mental fight; the effect of which is, that his Writings become obscure, if not unintelligible to common Readers; just as the eye is for some time rendered incapable of distinguishing the objects that are presented to it, after having steadfastly contemplated the sun.[100]

Thus, the poetic imagination is often even incapable of conveying its own ideas which are too powerful, too brilliant for expression. The artist often fails in his expressions, "Revolving these awful and magnificant scences in his musing mind, he labours to express in his compositions the ideas which dilate and swell his Imagination; but is often unsuccessful in his efforts."[101]

Blake's expression of this idea is rather less explicit than his predecessors' in this critical mode; his ideas seem more the frustrations of a misunderstood poet than a concept of the inexpressibility of great ideas. Blake indeed, had said that sublimity needs preciseness of execution; this idea as we have seen was his own interpretation of the particularity of art and creativity. However, Blake did have a notion that

the idea in the artist's mind is larger than the capacity of the common people to understand it. Typically this comes out in the form of conflict with contemporary taste. He wrote in a letter to Dr. Trusler for whom he was doing some illustrations:

> You say that I want somebody to Elucidate my Ideas. But you ought to know that What is Great is necessarily obscure to Weak men. That which can be made Explicit to the Idiot is not worth my care. The wisest of the Ancients consider'd what is not too Explicit as the fittest for Instruction, because it rouses the faculties to act. I name Moses, Solomon, Esop, Homer, Plato.[102]

Explaining the difference between his own imagination which comprehends more than others, and Trussler's, which is exemplary of common imaginations, he went on,

> I see Every thing I paint in This World, but Every body does not see alike. . . . The tree which move some to tears of joy is in the Eyes of others only a Green thing that stands in the way. Some See Nature all Ridicule & Deformity, & by these I shall not regular my porportions; & Some Scarce see Nature at all.[103]

Duff expressed the same sentiment, writing, "objects or events may be viewed in very different lights by different persons, and admit of great variety in the presentation."[104]

Blake further explained his own imagination, justifying those ideas which were not clear to Trussler, in terms which are similar to Shaftesbury's conviction that imagination comes from an inner understanding rather than from a knowledge of external forms.

> But to the Eyes of the Man of Imagination, Nature is Imagination itself. As a man is, So he Sees. As

> the Eye is formed, such are its Powers. You certainly Mistake, when you say that the Visions of Fancy are not to be found in This World. To Me This World is all One continued Vision of Fancy or Imagination. . . .[106]

There were of course specifics on which all four of these creator-oriented writers would have disagreed; but their definitions of a plastic, inner genius, of a creative imagination are similar to one another. Each had a concept of art as an expression of this inner creative quality in the artist. Each felt that art was an expression of the particular rather than the general, and that genius itself was particular. The enthusiasm of creative genius, the personal character of art, and the particularity of expression are all ideas which were contrary to generally accepted traditional object-oriented interpretations, and to the eighteenth-century associationalistic subject-oriented aesthetic psychology.

## V

The creator orientation was an attitude which was characteristic of one aspect of the eighteenth century. It grew out of the same traditional sources that helped frame the object and subject orientations; it also grew out of the tradition of Cambridge Platonism which was formulated to refute materialism and empiricism. Thus, creator-oriented criticism was at its root a struggle of contrary forces and trends. There was a very strong element of rebellion and rejection of traditional critical standards in it. The

call for enthusiasm by Shaftesbury and Young, the appeal of the dark and mysterious of Young's original genius, Blake's visions, and the soaring inspiration of Duff's irregular genius, all deny the regular, planned, and empirical genius and art recommended by Reynolds, Johnson, Pope, Dennis, Blake, Hutcheson, Gerard, and Keynes. The denial of the particular was contrary to the ideas of Avison, Pope, Reynolds, Johnson, and other classicists.

The creator orientation can be detected from the earliest years of the century in the lone voice of Shaftesbury. By the middle to late years of the period Young and Duff expressed stronger, yet less systematic versions of the same ideas. At the same time, elements of the attitude were affecting even the criticism of Reynolds who expressed this intrusion as an admiration for the powerful, individual creative force of Michelango's mind. By the last years of the century several critics talked about the individual, the particular, and the inner creative force of the artist and his special relationship with beauty (or truth): the artist had to struggle to express his idea in the limited materials of artistic symbol. Abrams refers to this tendency as a growth of the Romantic.[106] Bate refers to it as the growing "premise of feeling and individualism."[107]

We can see in the creator-oriented point of view, then, ideas which ran counter to the main themes in the first part of the century, but which had a traditional foundation. The

innate idea rejected by Locke was reintroduced by Shaftesbury as a connatural capacity, and spoken of by Blake and others as inspiration. The particularity and individuality of the genius and of art was also contrary to the generality of art and genius attested to by Johnson, Reynolds, and others. It was also more specific than the associationalistic definition of a trained and natural genius. This "natural genius" was reinterpreted by Duff who attributed to it a peotic inspiration. And finally, the limitations of a symbolic statement of the ideas of the genius was a particularly interesting issue since it questioned the freedom of artistic creativity within the traditional framework of rules and genres.

## FOOTNOTES TO CHAPTER V

[1]Edward Young, Conjectures on Original Composition in The Great Critics, An Anthology of Literary Criticism, ed. James Harry Smith and Edd Winfield Parks (New York: W. W. Norton, 1967; 3rd ed.), p. 417.

[2]M. H. Abrams, The Mirror and the Lamp: Romantic Theory and the Critical Tradition (New York: Modern Language Association Publications, 1932; reprint ed. London: Oxford University Press, 1953), p. 22.

[3]supra, see chapter 2 and introduction to 3 and 4 for the difference between the earlier two modes.

[4]Abrams, p. 22.

[5]Colridge, for example, wrote from a creator-oriented perspective in his criticism of Shakespeare, and produced Romantic peotry himself; Johnson criticized Shakespeare from an object-oriented perspective, and produced the classicist Irene.

[6]Barry McCoun Burrows, "Shaftesbury and Cosmic Toryism: An Alternative World View"(Ph.D. dissertation, University of Oklahoma, 1973), p. 82. Burrows indicates that the theme which unifies the Characteristics is the idea that enthusiasm is based on reason. We are faced with two kinds of reason: one type of reason is an internal power which relies on either a priori idea or on Shaftesbury's connatural capacity; the other type of reason is Locke's deduction, an empirical process based on particular sense data.

[7]Geoffrey Tillotson, Paul Fussell, Jr., and Marshall Waingrow, Eighteenth-Century English Literature (New York: Harcourt, Braze & World, 1969), p. 1490.

[8]Burrows, pp. 50-52. See also: R. L. Brett, The Third Earl of Shaftesbury: A Study in Eighteenth-Century Literary Theory (London: Hutchin House, 1951), pp. 13-32. and Stanley Green, Shaftesbury's Philosophy of Religion and Ethics: A Study in Enthusiasm (N.P.: Ohio University Press, 1967), pp. 6-7.

[9]Burrows, p. 52.

[10]Brett, p. 21.

[11]Ibid., p. 25.

[12]Ibid., pp. 28-32.

[13]Young, pp. 421-422. (cf. Shaftesbury, infra p. 283)

[14]Ibid., p. 410.

[15]Ibid., p. 414.

[16]William Duff, An Essay on Original Genius; a facsimilie reproduction ed. by John L. Mahoney (Gainsville, Fla.: Scholar's Facsimilies & Reprints, 1964), pp. 170-171.

[17]William Blake, The Complete Writings, ed. Geoffrey Keynes (New York: Random House, 1957), p. 459. Unless otherwise indicated, references from this edition are to be the Annotations to Reynolds.

[18]Several of Reynolds's specific statements appealed to Blake and he commented that surely Reynolds could not have written them.

[19]Anthony Ashley Cooper, third Earl of Shaftesbury, Characteristics of Men, Manners, Opinions, Times, ed. John M. Robertson (New York: Bobbs-Merrill, 1964), I, 135-136.

[20]Ibid., I, 214-217.

[21]Shaftesbury, quoted by Brett, pp. 84-85.

[22]Ibid., p. 84.

[23]Ibid., pp. 84-85.

[24]Shaftesbury, I, 252.

[25]Ibid., II, 137 (Italics, mine)

[26]Ibid., I, 125.

[27]Ibid.

[28]Ibid., I, 127.

[29]Ibid., 128-130.

[30]Ibid., I, 129.

[31]Ibid., I, 142-

[32]Ibid., I, 37-

[33]Blake, Keynes ed., p. 823.

[34]William Blake, Prophetic Writings, D. J. Sloss and J. P. R. Wallis, eds., 2 vols. (Oxford: Clarendon Press, 1926), p. 79. Blake wrote, "When I came into my parlour and sat down, and took my pen to write, My Fairy sat down upon the table and dictated Europe," p. 79.

[35]Blake, Keynes ed. pp. 475-477.

[36]Ibid., p. 477.

[37]Ibid., p. 222 (from Preludium to the First Book of Urizen).

[38]Elmer R. Brooks, "Traits of the Poete Maudit in Blake, Colridge, and Wordsworth"(Master's Thesis, University of Oklahoma, 1948), see especially "Table of Traits", p. 190.

[39]Ibid., p. 190.

[40]Blake, Keynes ed., p. 445.

[41]Ibid., 470-471.

[42]Ibid., 473.

[43]Ibid., p. 475.

[44]Ibid., p. 470.

[45]Ibid.. p. 98 (from All Religions are One).

[46]Duff, p. 87.

[47]Ibid., pp. 96-97.

[48]Ibid., pp. 172-173.

[49]Ibid., pp. 6-7.

[50]Ibid., pp. 28-29.

[51]Shaftesbury, I, 136.

[52]Ralph Cudworth, True Intellectual System, ed. Harrison I, 282, quoted by Brett, p. 25.

[53]Duff, p. 20.

[54]Ibid., p. 22.

[55]Ibid., p. 171.

[56]Abrams, p. 162.

[57]Ogilvie's work is not considered in this paper, but his work was used as one of the materials to determine orientations in the eighteenth century.

[58]Shaftesbury, II, 64.

[59]Ibid., II, 66.

[60]Ibid., II, 107.

[61]Ibid., II, 122.

[62]Ibid., II, 126.

[63]Ibid., II, 105.

[64]Ibid., II, 132.

[65]Ibid., II, 132-133.

[66]Young, p. 414.

[67]Ibid., p. 415.

[68]Ibid., p. 422.

[69]Ibid.

[70]Duff, p. 201.

[71]Ibid., pp. 176-177.

[72]Blake, Kenes ed., p. 471.

[73]Ibid., (from There is No Natural Religion), p. 97.

[74]Shaftesbury, I, 134-135.

[75]Ibid., I, 134.

[76]Ibid., I, 133.

[77]Ibid., II, 125.

[78]Young, p. 431.

[79]Ibid., p. 419.

[80]Duff, p. 160.

[81]Ibid., p. 162.

[82]Ibid., p. 168.

[83]Ibid., p. 167.

[84]Ibid., pp. 167-168.

[85]Blake, Keynes ed., p. 451.

[86]Ibid., p. 453.

[87]Ibid., p. 457.

[88]Ibid., p. 459.

[89]Ibid., (from Annotations to Lavater, no. 23), p. 66.

[90]Shaftesbury, I, 124.

[91]Ibid., I, 132-133.

[92]Ibid., II, 133.

[93]Ibid., II, 126.

[94]Ibid., II, 133.

[95]Ibid., II, 134.

[96]Ibid., II, 144.

[97]Ibid., I, 92.

[98]Young, pp. 415, 421.

[99]Duff, pp. 143-145.

[100]Ibid., pp. 145-146.

[101]Ibid., pp. 164-165.

[102]Blake, Keynes ed., p. 793.

[103]Ibid.

[104]Ibid.

[105]Ibid.

[106]Abrams, pp. 21-26.

[107]Walter Jackson Bate, From Classic to Romantic: Premises of Taste in Eighteenth-Century England (Cambridge: Harvard University Press, 1946), p. 129.

## SUMMARY

### I

There were three critical and aesthetic orientations which determined eighteenth-century British interpretations in the arts. All three were apparent in the opening years of the century. The object orientation was dominant in the early years because it was the traditional attitude which can be traced back to Plato and Aristotle. The subject orientation was first articulated by Addison in the Spectator Papers; it was based ultimately on Hobbesian materialism and Lockean associationalism. This orientation came to have a major impact on critical and aesthetic systems by the middle of the century. The creator orientation appeared originally as Shaftesbury's application of Cambridge Platonism to the specific problems of aesthetics and morals. This last perspective became an important a attitude by the end of the century. Even though very few critics were predominantly creator oriented, the new perspective had an influence on criticism--elements of intuitionalism, enthusiasm, and creative plastic genius can be detected in several works.

Each orientation had distinctive critical vocabularies

definitions of terms, and methods. Definition of beauty and nature were important in the object-oriented mode of thought: criticisms tended to look at individual works (Pope's and Johnson's criticisms of Shakespeare and Homer), and at genres (Reynolds's historical-mythological and historical portraiture genres) in order to determine how closely they imitated nature. Psychological responses and characteristics of human nature were central to the subject-oriented perspective: analysis centered on the operations of pain and pleasure as they related to aesthetics (Addison's Spectator Papers, Burke's Inquiry, and Hutcheson's Inquiry). Intuition as an operation of a plastic imagination was important to the creator-oriented critics: expressions ran from Shaftesbury's system, to Duff's analysis, to Young's and Blake's enthusiastic opinions. Thus, each orientation was characterized by a specific approach to the materials. The traditional object orientation used a critical method; the subject orientation used an analytical method; the creator orientation used both criticism and analysis, as well as an intuitive approach.

Each orientation had an influence upon the other two. The traditional orientation had a profound effect up on the others. Shaftesbury, for example, had to convey very radical ideas in a traditional vocabulary. His je ne scais quoi suggested a quality of the artist's mind which was too large, too close to the goodness of the

creator, to be expressed in the material form of art. For him, as for Blake much later, the material in which the artistic idea must be expressed is too limiting to convey the total creative power of the artist's conception. Burke's system showed considerable influence of the object orientation; he defined various qualities which must lead to certain aesthetic reactions in the subject. Reynolds incorporated influences of both of the new attitudes in his traditional criticism. It is especially for this reason that he seems to be a spokesman for eighteenth-century ideas in general. It is also for this reason that his critical ideas are subject to a number of interpretations, and that his work is very controversial. Johnson also seems to have been strongly influenced by the subject orientation. He was primarily interested in human nature, but he did not interpret it in associationalistic terms; his emphasis was on the reflection of human nature in art, rather than on man's reaction to what he sees in the arts. Hutcheson is particularly interesting; he used an associationalistic, subject-oriented framework and incorporated into it Shaftesbury's intuitive sense, calling it internal sense. His particular adaptation influenced many of his later contemporaries and eventually led to a school of "common sense."

## II

From the historical perspective of the twentieth century it is possible to impose a kind of order upon the ideas of the eighteenth century; it is much more difficult to understand these ideas in the same sense they were intended. Our concept of associationalism and stimulus-response has been refined by schools of psychology and sociology. Our concepts of creative genius has been influenced by Coleridge and Dewey. And our prejudice against the absolute turths of classicism has been fed by relativism in all of the sciences.

Becker has written that although we use the same words as the men of the eighteenth century, our frame of reference is historical, while theirs was absolute. We are relativists, and want to know the past in these terms; thus, we tend to impose our frame of reference on the past. Becker has said that the shift in frame of reference was the "most important event in the intellectual history of modern times."[1] We have lost the faith in absolute truths and have substituted "facts" for logic; the eighteenth-century intellectuals imposed their rational faith upon their interpretation of the arts. Thus, we see Reynolds and Johnson searching for a standard of art, and Hume and Blake for a standard of taste, while Shaftesbury and Blake search for a foundation of intuitive knowledge in the creative process. In writing about the past, then, we

must always remember that it is from an historical perspective and that we cannot make an exact reproduction of it.

## FOOTNOTES TO SUMMARY

[1]Carl L. Becker, The Heavenly City of the Eighteenth-Century Philosophers (New Haven: Yale University Press, 1932; reprint ed. Yale University Press, 1970), p. 21.

# BIBLIOGRAPHY

## BOOKS: ORIGINAL SOURCES


Addison, Joseph; Steele, Richard; and others. The Spectator. 5 vols. Edited by Donald F. Bond. Oxford: Clarendon Press, 1965.

Avison, Charles. An Essay on Musical Expression. A facsimilie of the first edition of 1753. New York: Broude Brothers, 1967.

Aristotle, Aristotle's Theory of Poetry and Fine Art with a Critical Text and Translation of the Poetics. Translated and Edited by Samuel H. Butcher. London: Macmillan and Co., 1923.

Bayly, Anselm. The Alliance of Musick, Poetry and Oratory. London, 1789.

Blake, William. Complete Writings. Edited by Geoffrey Keynes. New York: Random House, 1957.

_____. The Prophetic Writings of William Blake. 2 vols. Edited by D. J. Sloss and J. P. R. Wallis. Oxford: The Clarendon Press, 1926.

Borghese, A. D. R. A New and General System of Music, or the Art of Music, Deduced from the New and Most Simple Principles. Translated from the original Italian by John Gunn. London: 1790.

Boswell, James. The Life of Samuel Johnson and Journal of a Tour to the Hebrides. 10 vols. New York: Dobleday, 1922.

Burney, Dr. Charles. A General History of Music from the Earliest Ages to the Present Period. 4 vols. 2nd ed. London, 1789.

Burke, Edmund. A Philosophical Inquiry into the Origins of Our Ideas of the Sublime and Beautiful. Edited by J. T. Boulton. London: Routledge and Paul; New York: Columbia University Press, 1958.

Dennis, John. Critical Works. 2 vols. Edited by Edward Niles Hooker. Baltimore: Johns Hopkins Press, 1939.

Dryden, John. Essays. 2 vols. Edited by W. P. Ker. New York: Russell and Russell, 1961.

Duff, William. An Essay on Original Genius. Edited by John L. Mahoney. Gainsville, Fla.: Scholar's Facsimilies & Reprints, 1964.

Gerard, Alexander. An Essay on Taste Together with Observations Concerning the Imitative Nature of Poetry. Edited by Walter J. Hipple, Gainsville, Fla.: Scholar's Facsimilies & Reprints, 1963.

Harris, James. Three Treatises, the First Concerning Art, the Second Concerning Music and Poetry, the Third Concerning Happiness. London, 1744.

Hobbes. Leviathin. Edited by Herbert W. Schneider. Indianapolis: Bobbs-Merrill Co.; The Library of Liberal Arts, 1958.

Hogarth, William. Analysis of Beauty. Edited by Joseph Burke. Oxford: At the Clarendon Press, 1955.

Hume, David. The Philosophical Works. 4 vols. Edited by Thomas Hill Green and Thomas Hodgegrose. Vols. 3-4. Essays: Moral, Political, and Literary. London, 1882; reprint ed. Germany: Scientia Verlag Aalen, 1964.

Hutcheson, Francis. An Inquiry Concerning Beauty, Order, Harmony, Design. Edited with an Introduction by Peter Kivey. The Hague: Martines Nikhoff, 1973.

Johnson, Samuel. Dictionary of the English Language. 2 vols. London, 1755.

_____. Lives of the Poets. 3 vols. Edited by George Birbeck Hill. Oxford: At the Clarendon Press, 1955.

_____. The History of Rasselas Prince of Abissinia. Edited by Goeffrey Tillotson and Brian Jenkins. London: Oxford University Press, 1971.

_____. The Yale Edition of the Works of Samuel Johnson. 9 vols. Edited by Herman W. Leibert, et al. New Haven and London: Yale University Press, 1958-. vol. 2. Idler and Adventurer. Edited by Walter J. Bate, John M. Bullitt, and L. F. Powell; vols. 3-5: The Rambler. Edited by Walter J. Bate and Albrecht B. Strauss; vols. 7-8: Johnson on Shakespeare. Edited by Arthur Sherbo.

Kames, Henry Home, Lord. Elements of Criticism. 8th ed. London, 1805.

Locke, John. An Essay Concerning Humane Understanding. 2 vols. Edited by Alexander Campbell Fraser. Oxford: Clarendon Press, 1894.

Longinus. On the Sublime. Translated by A. O. Richard. Oxford: At the Clarendon Press, 1906.

Plato. The Republic of Plato. Translated by John Llewleyn Davies and Davis James Vaughan. Cambridge [Eng.]: Macmillan & Co., 1921.

Pope, Alexander. The Twickenham Edition of the Poems of Alexander Pope. 11 vols. General Editor, John Butt. London: Methuen & Co., 1942-1969. vol. 1: Pastoral Poetry and An Essay on Criticism. Edited by E. Audra and Aubrey Williams; vol. 3: Essay on Man. Edited by Maynard Mack; vol. 7: The Illiad of Homer, Books I-IX. Edited by Maynard Mack.

Reynolds, Sir Joshua. Discourses on Art. Edited by Robert Wark. Huntington, Cal.: Henry E. Huntington Library and Art Gallery, 1959; reprint ed., New York: Collier Books, 1966.

_____. Discourses Delivered to the Students of the Royal Academy. Edited by Roger Fry. London: Dutton, 1905.

Richardson, Jonathan. Essay on the Theory of Painting. in Works. Edited by J. Richardson. London, 1773.

Shaftesbury, Anthony Ashley Cooper, third Earl of. Characteristics of Men, Manners, Opinions, Times. Edited by John M. Robertson. New York: Bobbs-Merrill, 1964.

Twining, Thomas. Aristotle's Treatise on Poetry, Translated: With Notes on the Translation and On the Original: and Two Dissertations on Poetical and Musical Imitation. London: Payne & Son, 1789.

Webb, Daniel. Observations on the Correspondence between Poetry and Music. A facsimilie of the London edition of 1769 in the Yale University Library. New York: Garland Publishing Co., 1970.

Wölfflin, Heinrich. Principles of Art History. Translated By M. D. Hottinger. New York: Bell & Sons, 1932; reprint ed. New York: Dover, 1950.

Young, Edward. "Conjectures on Original Composition." In The Great Critics. Edited by James Harry Smith and Edd Winfield Parks. 3rd ed. New York: W. W. Norton, 1967.

## BOOKS: SECONDARY SOURCES

Abrams, M. H. The Mirror and the Lamp: Romantic Theory and the Critical Tradition. London: Oxford University Press, 1953; reprint ed. 1976.

Bate, Walter Jackson. From Classic to Romantic: Premises of Taste in Eighteenth-Century England. Cambridge: Harvard University Press, 1946.

Battestin, Martin C. The Providence of Wit: Aspects of Form in Augustan Literature and Arts. Oxford: At the Clarendon Press, 1974.

Bosanquet, Bernard. A History of Aesthetic. London: G. Allen & Unwin, 1922.

Brett, R. L. The Third Earl of Shafetsbury: A Study in Eighteenth Century Literary Theory. London: Haskell House, p. 51.

Burton, Anthony. Josiah Wedgwood. New York: Stein & Day, 1956.

Cassirer, Ernst. The Philosophy of the Enlightenment. Translated by Fritz C. A. Koelin and James P. Pettegrove (Boston: Beacon Press, 1955), first published for J. C. B. Mohr in Tubingen, 1932.

Clifford, James L. ed. Man versus Society in Eighteenth-Century England: Six Points of View. Cambridge: At the University Press, 1968.

Gershoy, Leo. From Despotism to Revolution: The Rise of Modern Europe. New York: Harper & Row, 1944; reprint ed. Harper Torchbooks, 1963.

Gilbert, Katherine Everett and Kuhn, Helmut. eds. A History of Aesthetics. New York: Macmillan, 1939.

Grean, Stanley. Shaftesbury's Philosophy of Religion and Ethics: A Study in Enthusiasm, N. P.: Ohio University Press, 1967.

Hagstrum, Jean H. The Sister Arts: The Tradition of Literary Pictorialism and English Poetry from Dryden to Gray. Chicago: University of Chicago Press, 1958.

_____. Samuel Johnson's Literary Criticism, Minneapolis: University of Minnesota Press, 1952.

Hauser, Arnold. The Social History of Art. 4 vols. Translated by Stanley Godman. New York: Alfred A. Knopf, 1951; reprint ed. Vintage Books, 1951.

Hazard, Paul. The European Mind, 1680-1715. Translated by J. Lewis May. Cleveland & New York: Harcourt, Brace & World, 1969.

Hipple, Walter J. The Beautiful, the Sublime, and the Picturesque in Eighteenth-Century British Aesthetic Theory. Carbondale: Southern Illinois Press, 1957.

Holt, Elizabeth G., ed. A Documentary History of Art, 3 vols. vol. 2: Michaelangelo and the Mannerists: The Baroque and the Eighteenth Century. Garden City: Doubleday Anchor Books, 1958.

Listowel, Earl of. A Critical History of Modern Aesthetics. New York: Haskell House, 1974.

Lonsdale, Roger. Dr. Charles Burney: A Literary Biography. Oxford: At the Clarendon Press, 1965.

Lovejoy, Arthur O. Essays in the History of Ideas. Baltimore: Johns Hopkins Press, 1948.

Monk, Samuel Holt. The Sublime: A Study of Critical Theories in Eighteenth-Century England. New York: Modern Language Association of America, 1935; reprint ed. Ann Arbor: University of Michigan Press, 1960.

Nahm, Milton C. Genius and Creativity: An Essay in the History of Ideas. 1st ed. published under title: The Artist as Creator. 1956; New York and Evanston: Harper & Row, Harper Torchbooks, 1965.

Nicolson, Marjorie Hope. Mountain Gloom and Mountain Glory: The Development of the Aesthetic of the Infinite. Ithica: Cornell University Press, 1959.

Osborne, Mary Tom. Advice to Painter Poems, 1633-1856: An Annotated Finding List. Austin: University of Texas Press, 1949.

Paulson, Ronald H. Hogarth: His Life, Art, and Times. 2 vols. London: Yale University Press, 1971.

Plumb, J. H. In the Light of History. New York: Delta Publishing Co., 1972.

Roberts, Penfield, The Quest for Security, 1715-1740: The Rise of Modern Europe. New York: Harper & Row, 1947; reprint ed. Harper Torchbooks, 1963.

Sellers, Wilfred, and Jaspers, John, eds. Readings in Ethical Theory. New York: Appleton-Century Crafts, 1952.

Sypher, Wylie. Four Stages of Renaissance Style: Transformations in Art and Literature, 1400-1700. New York: Doubleday, 1955.

Tillotson, Geoffrey; Fussell, Paul, Jr.; and Waingrow, Marshall, eds. Eighteenth-Century English Literature, New York: Harcourt, Brace & World, 1969.

Tuberville, A. S., ed. Johnson's England: An Account of the Life and Manners of His Age, 2 vols. Oxford: Clarendon Press, 1933.

Warren, Austin, Alexander Pope as Critical Humanist. Princeton Studies in English, number 1. Princeton: Princeton University Press, 1929; reprint ed., Glousester, Mass.: Peter Smith, 1963.

Wasserman, Earl R. Aspects of the Eighteenth Century. Baltimore, Johns Hopkins Press, 1965.

Wellek, Rene. A History of Modern Criticism. 4 vols. vol. 1: The Later Eighteenth Century. New Haven & London: Yale University Press, 1955.

Willey, Basil. The Eighteenth Century Background: Studies on the Idea of Nature in the Thought of the Period. Boston: Beacon Press, 1961.

## THESES

Brooks, Elmer L. "Traits of the Poetic Maudit in Blake, Caleridge, and Wordsworth." Master's Thesis, (Oklahoma University).

Burrows, Barry McCoun. "Shaftesbury and Cosmic Toryism: An Alternative World View." Ph.D. Dissertation, University of Oklahoma, 1973.

Scott, Barbara Kerr. "The Evolution of Concepts Found in the Discourses on Art of the First President of the Royal Academy." Master's Thesis (Oklahoma University), 1970.

## ARTICLES

Hartley, Lodwich. "Johnson, Reyjolds, and the Notorious Streaks of the Tulip Again." Eighteenth-Century Studies 8 (Spring 1975):329-336.



PLATE 1. "Nature and the Arts" from James Harris's Three Treatises

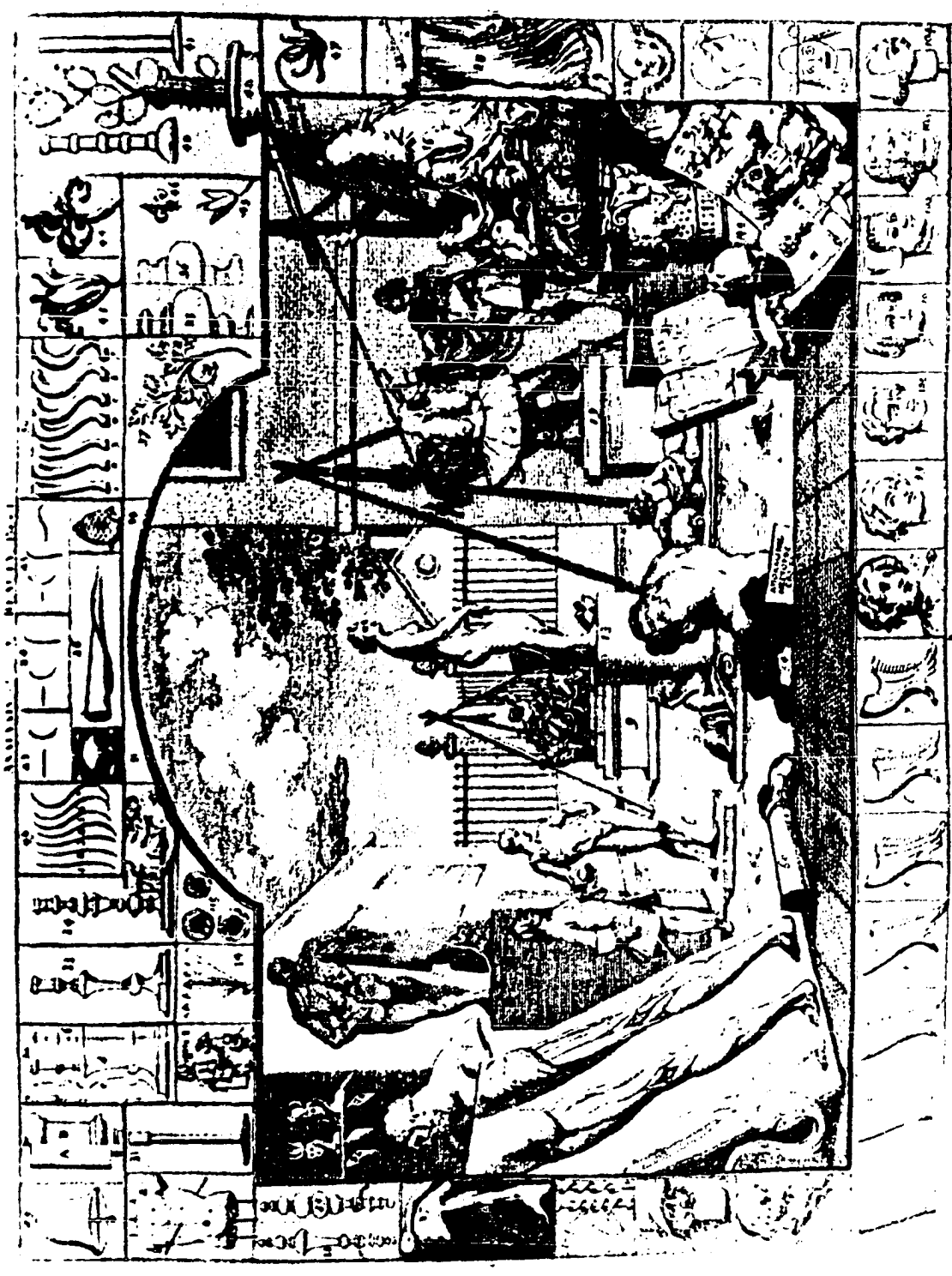

PLATE 2. Plate number 1. from Hogarth's Analysis of Beauty



PLATE 4. David Garrick by Gainsborough.

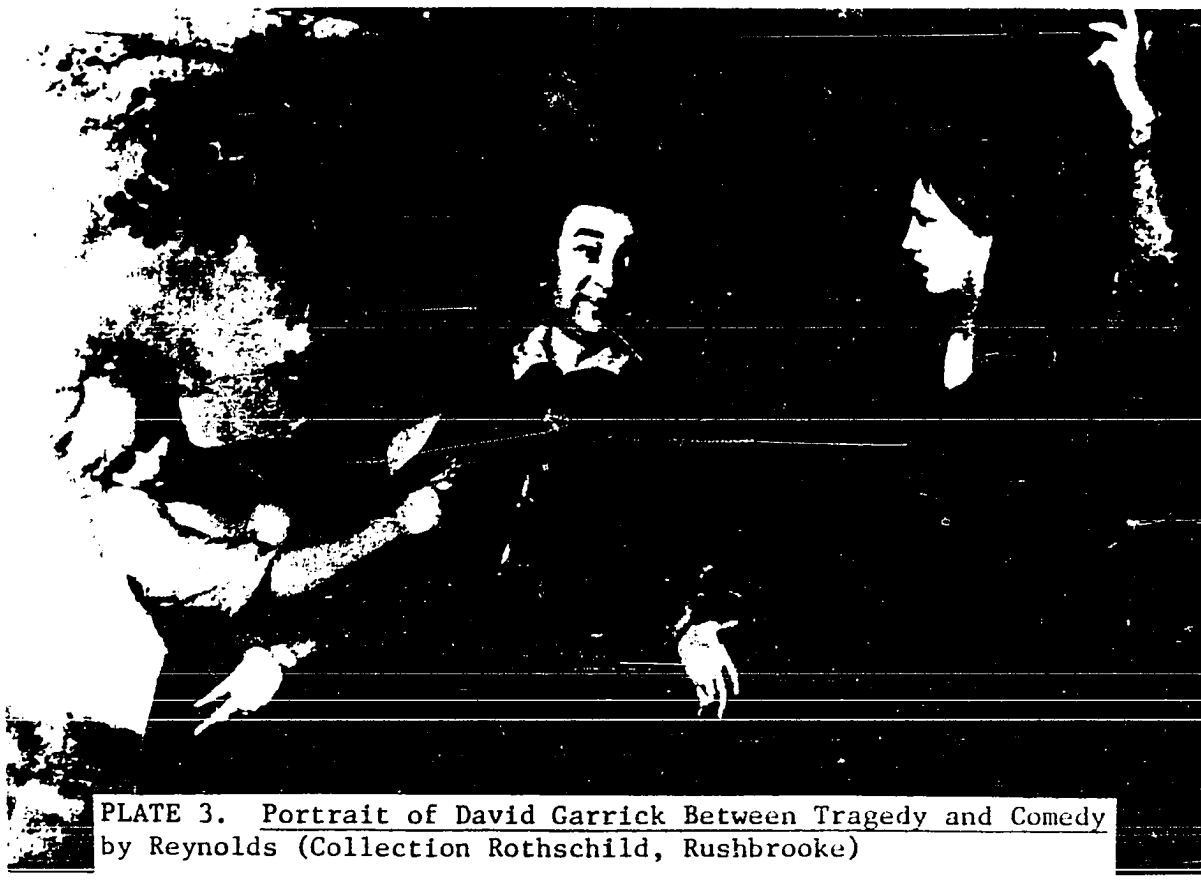

PLATE 3. Portrait of David Garrick Between Tragedy and Comedy by Reynolds (Collection Rothschild, Rushbrooke)



PLATE 5. Portrait of Mrs. Siddons as the Tragic Muse by Reynolds (Henry E. Huntington Library and Art Gallery, San Marino, California)



PLATE 6. Portrait of Mrs. Siddons by Gainsborough (National Gallery, London)