DOCTORAL DISSERTATION SERIES
Publication No.: 19, 500

AUTHOR: Alva Taylor Stair, Jr., Ph. D., 1956
The University of Oklahoma

TITLE: VIBRATIONAL SPECTRA OF COMPOUNDS IN DIFFERENT STATES OF AGGREGATION

University Microfilms, Ann Arbor, Michigan

Downloaded from SHAREOK. Persistent Handle URL: https://hdl.handle.net/11244/201

THE UNIVERSITY OF OKLAHOMA

GRADUATE COLLEGE

VIBRATIONAL SPECTRA OF COMPOUNDS IN DIFFERENT STATES OF AGGREGATION

A DISSERTATION

SUBMITTED TO THE GRADUATE FACULTY

in partial fulfillment of the requirements for the

degree of

DOCTOR OF PHILOSOPHY

BY

ALVA TAYLOR STAIR, JR.

Norman, Oklahoma

1956

VIBRATIONAL SPECTRA OF COMPOUNDS IN

DIFFERENT STATES OF AGGREGATION

APPROVED BY

J Rud Nielsen

Otto Theimer

William N. Huff

John A Plint

Arthur Bernhart

DISSERTATION COMMITTEE

ACKNOWLEDGEMENTS

The writer wishes to express his sincere thanks to Professor J. Rud Nielsen, who suggested this research, for his time and invaluable advice throughout the course of this investigation.

The writer is also indebted to the following:

The National Science Foundation for a grant supporting this research.

Dr. Jasper A. Jackson, Jr. for his encouragement in the early stages of the investigation and with whom the construction of the low temperature apparatus was a joint undertaking.

Dr. N. A. Narasimham for his invaluable aid and advice for two years.

Mr. Frank Maginnis, supervisor of the physics shop, who readily helped with much of the instrumentation.

Dr. Colin A. Plint for his aid in the design of the crystal-growing apparatus.

Mr. C. W. Gullikson and Dr. A. H. Woollett for their comradeship and assistance throughout the investigation.

My friend, Mr. Robert C. Thomas, who drew most of the illustrations.

TABLE OF CONTENTS

Page

LIST OF TABLES iv

LIST OF ILLUSTRATIONS v

Chapter

I. INTRODUCTION 1

II. STATEMENT OF THE PROBLEM 7

III. LOW TEMPERATURE RAMAN APPARATUS 8

IV. LOW TEMPERATURE RAMAN SPECTRA 28

Ethylene Oxide 30

Dimethyl Ether 34

Sulphur Hexafluoride 38

V. VIBRATIONAL SPECTRA OF TRIOXANE 49

BIBLIOGRAPHY 78

LIST OF TABLES

Table		Page
I.	Raman Spectra Obtained with Low Temperature Apparatus	29
II.	Raman Spectrum of Ethylene Oxide	31
III.	Raman Spectrum of Dimethyl Ether	36
IV.	Raman Spectrum of Crystalline Sulphur Hexafluoride	41
V.	Raman Spectrum of Gaseous SF_6	42
VI.	Comparison of the Raman Spectra of SF_6 in Different States of Aggregation	47
VII.	Raman Spectrum of Trioxane	69
VIII.	Infrared Spectrum of Trioxane	70
IX.	Active Fundamental Vibration Frequencies of Trioxane	75
X.	Inactive Fundamental Vibration Frequencies of Trioxane	77

LIST OF ILLUSTRATIONS

Figure		Page
1.	Dewar Flask with Inserted Vacuum Jacket and Raman Tube (Cross Section)	9
2.	Dewar Flask and Vacuum Jacket	12
3.	Dewar Flask with Vacuum Jacket Inserted	13
4.	Helical Mercury Lamp for Low Temperature Raman Irradiation Apparatus	14
5.	Low Temperature Apparatus Mounted in Housing	15
6.	Vacuum Jacket with Inserted Raman Tube (Cross Section)	17
7.	Raman Tube with Inserted Heating Coil (Cross Section)	18
8.	Crystal-Growing Drive Mechanism	20
9.	Optical System (Schematic)	21
10.	Prism Mount and Lens Holder	22
11.	Sample and Vacuum Systems	23
12.	Modified Dewar and Vacuum Jacket (Cross Section)	27
13.	Microphotometer Tracing of the Raman Spectrum of Gaseous SF_6	43
14.	Normal Vibrations of Sulphur Hexafluoride	46
15.	Reproductions of the Spectra of Liquid and Crystalline Trioxane	53
16.	Infrared Spectrum of Trioxane, Li F Region	54

Figure Page

17. Infrared Spectrum of Trioxane, Na Cl Region 55

18. Infrared Spectrum of Trioxane, Cs Br Region 56

19. Normal Ring Vibrations of Trioxane 59

CHAPTER I

INTRODUCTION

Raman and infrared spectroscopy provide valuable methods for investigating molecules. By studying the vibration-rotation spectra of a compound it is often possible to assign the normal vibrational frequencies and determine the geometrical configuration of the molecule. From these data the thermodynamic properties of the compound in the gaseous state can be calculated with great accuracy. For simple compounds it is possible to evaluate force constants and in general learn something about the nature of interatomic forces. Investigation of the changes occurring in the vibration-rotation spectra as the compound changes phase is an important source of information about intermolecular forces. The present research has been directed not only towards obtaining and interpreting the vibrational spectra of selected molecules but also towards studying the spectra of each compound in different states of aggregation, comparing the spectra and noting the changes. This field of investigation is quite broad and the present work covers only a small area. The instruments used are of moderate resolution such that the rotational fine structure was not resolved but revealed itself only in the contours of the vibrational bands observed in the gaseous state. The spectra of the solid phase obtained are limited to molecular crystals in

which the molecule can still be considered as a unit and the interaction between molecules is relatively small. Ionic crystals and metals, in which the molecules are no longer separate units, will not be considered.

Interest in the investigation of molecular crystals has developed rapidly in recent years. A considerable amount of experimental work has been done and is being pursued by workers in India, France, and other countries, and by several investigators in this country, particularly R. S. Halford of Brown University, D. F. Hornig of Columbia University, and G. B. B. M. Sutherland of the University of Michigan. The analysis of the vibrational spectra of crystals has been facilitated in recent years by the theoretical work of Bhagavantam and Venkatarayudu,[1] Halford,[2] Hornig,[3] and Winston and Halford.[4] These authors have developed methods of deriving the selection rules for the normal vibrations of molecular crystals from the space group of the crystal. It was attempted to get good Raman spectra of the crystalline state of all the compounds investigated in the course of this research and to apply the theoretical methods mentioned whenever possible.

Other methods, however, must be used to explain the changes occurring in the spectrum of a compound as it goes from the gaseous to the liquid state. The loss of rotational fine structure is perhaps expected due to the increase in the number of collisions and the increase

---

[1] S. Bhagavantam and T. Venkatarayudu, Proc. Ind. Acad. Sci. 9A, 224 (1939); S. Bhagavantam, ibid., 13A, 543 (1941).

[2] R. S. Halford, J. Chem. Phys. 14, 8 (1946).

[3] D. F. Hornig, J. Chem. Phys. 16, 1063 (1948).

[4] H. Winston and R. S. Halford, J. Chem. Phys. 17, 607 (1949).

in interaction with neighboring molecules as the molecules become more densely packed. Often, only small shifts are observed in the vibrational frequencies. One theory which approximates the nature of the intercation causing such small shifts considers the interaction of an oscillating dipole with a surrounding medium of dielectric constant D.[5, 6] This theory predicts a frequency shift proportional to (D-1) (2D + 1). Such a theory is often qualitatively correct for crystals also, although if the crystal structure is known the methods previously mentioned utilizing the space group are much more valuable in the analysis. An effect that is often observed is the appearance of new lines in the spectrum of a compound in the liquid state and sometimes in gases under high pressure. Frequently the explanation of such an effect is the breakdown of selection rules that are rigorous only for free, undisturbed molecules. In special cases, however, the new lines are due to the formation of polymers or associated molecules. Formic acid (HCOOH) and methyl alcohol (CH_3OH) are examples in which new frequencies are observed in the spectra of the liquid and solid states due to the formation of dimers.*

Another interesting feature is the changes occurring in the intensities of the vibrational bands as the compounds change phase. At the present time, however, there is no theory of the intensities of vibrational-rotational bands capable of accounting for such phenomena.

---

[5] J. C. Kirkwood, quoted by W. West and R. E. Edwards, J. Chem. Phys. 5, 14 (1937).

[6] E. Bauer and M. Magot, Physica 5, 718 (1938).

*See C. Herzberg, Infrared and Raman Spectra (D. Van Nostrand Company, Inc. New York, 1945), Chapter V, section 2 for a more complete discussion and more examples of this kind.

The first compound investigated in this research, trioxymethylene or trioxane, is well suited to investigation in all three states of aggregation. It is a solid at room temperature with a vapor pressure of about 7 mm. It has a sublimation point of 46° C and a melting point of 64° C. These properties make it feasible to obtain the Raman spectra of the liquid and the crystal and the infrared spectrum of the vapor with apparatus and procedures commonly used. It is also fortunate that the crystal structure of trioxane is known.[7] The investigation of trioxane reported in this dissertation was the subject of a paper presented by the author at the symposium on molecular structure and spectroscopy held at Ohio State University in June, 1955.*

Many compounds of interest, however, do not have the convenient properties of trioxane, and special apparatus must be used to obtain their spectra in various states of aggregation. Since many substances have relatively low boiling and melting points, and since it is frequently desirable to obtain the spectrum of a compound at various temperatures even in the same phase, an apparatus for obtaining the Raman spectra of liquids and solids at low temperatures with rather accurate temperature control is very valuable. Since crystalline aggregates scatter incident radiation strongly, Raman spectra with much less background can be obtained from single crystals; consequently, it would be an advantage if single crystals could be formed and their spectra obtained. The apparatus described in this dissertation was designed to meet these requirements.

---

[7] N. F. Moermann, Rec. Trav. Chim. 56, 161 (1937).

*Vibrational Spectra of sym-Trioxane, A. T. Stair, Jr. and J. Rud Nielsen, Department of Physics, University of Oklahoma, Norman, Oklahoma.

There are not many compounds with low melting points whose crystal structures are known. Two compounds, ethylene and monomethylamine, which have low melting points and known crystal structures[8-11, 12] were ordered for use in this apparatus but became available too late to be included in the present dissertation. The Raman spectra were obtained at low temperatures of three compounds, ethylene oxide, dimethyl ether, and sulphur hexafluoride. Unfortunately, their crystal structures have not yet been determined.

A recent investigation of the vibrational spectra of ethylene oxide and ethylene oxide-d_4 (published after the completion of the work reported here) has been reported by Lord and Nolin.[13] These authors obtained the Raman spectra of the liquid and the infrared spectra of the gas for both compounds. They have made a complete assignment for both compounds and have listed references for the earlier work on ethylene oxide. The vibrational spectrum of ethylene oxide in the crystalline state has not previously been investigated.

Dimethyl ether, a substance recently being used in bubble chambers to detect particle tracks, has been investigated previously by a number of workers, whose results have been summarized by Herzberg.[14]

---

[8] C. W. Bunn, Trans. Far. Soc. 40, 23 (1940).

[9] K. W. Taconis, Diss. Leiden (1938).

[10] W. H. Keesom and K. W. Taconis, Physica 2, 463 (1935).

[11] M. Atoji and W. N. Lipscomb, Acta Cryst. 6, 770 (1953).

[12] G. F. Carter and D. H. Templeton, Acta Cryst. 6, 805 (1953).

[13] R. C. Lord and B. Nolin, J. Chem. Phys. 24, 656 (1956).

[14] G. Herzberg, Infrared and Raman Spectra (D. Van Nostrand Company, Inc. New York, 1945), p. 353.

a recent investigation of the lower portion of the infrared spectrum of the gas has been published by Hadni.[15] The vibrational spectra of dimethyl ether in the solid state have not previously been studied.

The fluorine atom, being the most electronegative of the elements, often imparts unique chemical and physical properties to compounds in which it occurs. Thus sulphur hexafluoride may be considered the most unusual of the halides. It is very stable and inert, and its high-voltage insulating property makes it extremely valuable to the electronic industry. Because the compound is a poor scatterer, the previous investigators[16, 17] who obtained the Raman spectrum of liquid SF_6 were able to observe only the strongest of the three Raman-active fundamentals in gaseous SF_6. It seemed desirable therefore to obtain a more complete Raman spectrum of the gas in order to observe any changes in the spectrum occurring as the compound changes from the gaseous to the liquid state. With the aid of a multiple-reflection Raman tube for gases designed and constructed in this laboratory by C. W. Gullikson,[18] a very good Raman spectrum of gaseous SF_6 was obtained. Crystalline SF_6 has not previously been studied; consequently, the Raman spectrum of the solid was observed at different temperatures.

---

[15] A. Hadni, C. R. Acad. Sci. 239, 349 (1954).

[16] A. Eucken and H. Ahrens, Z. physik. Chem. B26, 297 (1934).

[17] D. M. Yost, C. C. Steffens and S. T. Gross, J. Chem. Phys. 2, 311 (1934).

[18] C. W. Gullikson, "Vibrational Spectra of Compounds in the Gaseous State" (Unpublished paper, Dept. of Physics, University of Oklahoma).

CHAPTER II

STATEMENT OF THE PROBLEM

The objectives of this investigation have been:

1. To design and construct apparatus for obtaining Raman spectra of liquids and solids at low temperatures.

2. To obtain the Raman spectra of ethylene oxide, dimethyl ether and sulphur hexafluoride at low temperatures and interpret the observed spectra.

3. To obtain the Raman spectrum of liquid and crystalline trioxane, to obtain a more complete infrared spectrum of the vapor, and to give a complete interpretation of the observed spectra.

CHAPTER III

LOW TEMPERATURE RAMAN APPARATUS

Introduction

It is often desirable to obtain the Raman spectra of compounds at low temperatures. The purpose may be to reduce photochemical decomposition, to study rotational isomerism, or to obtain the spectra of liquid and solid substances having relatively low boiling and melting points.

The apparatus to be described here has a vertical Raman tube mounted inside a specially designed Dewar flask. A vacuum jacket separates the tube from the coolant. The lower section of the Dewar and the Raman tube are encircled by a helical mercury lamp mounted in an aluminum box which serves as a support, a light reflector, and a blower attachment for cooling the lamp. The details of the apparatus and operating procedure are described in the present chapter.

Cooling System

A schematic diagram of the Dewar flask with inserted Raman tube is shown in Figure 1. The Raman tube and vacuum jacket are centered by closely fitting washers. Phenolic resin is used for the outer centering washer of the vacuum jacket for two reasons: it acts as a light shield, and its low coefficient of thermal expansion reduces the danger of its

DEWAR FLASK WITH INSERTED VACUUM JACKET AND RAMAN TUBE

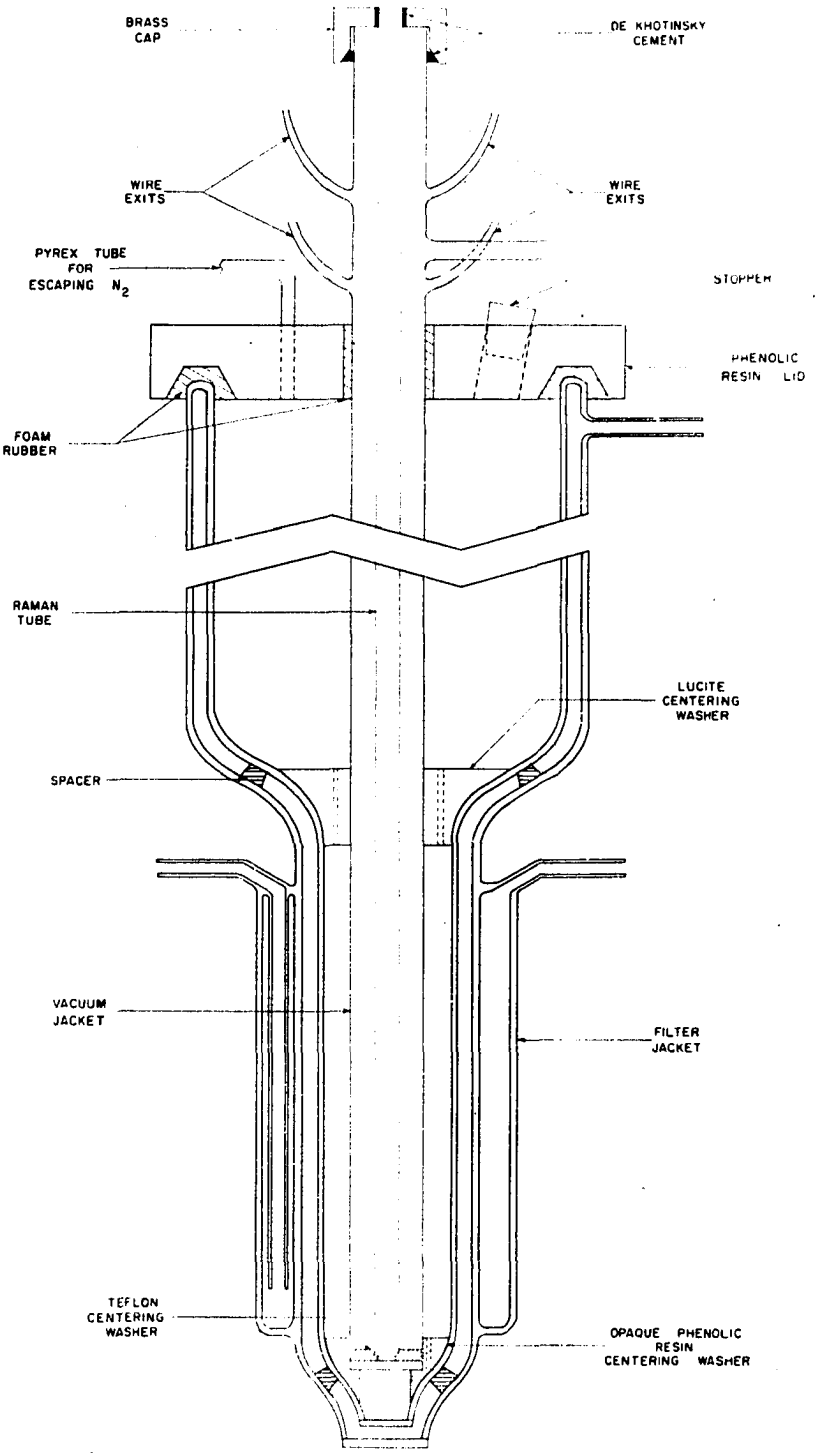

Figure 1

exerting too high pressure on the window when cooled. The inner washer centering the Raman window is made of Teflon which also has a low coefficient of thermal expansion. The closely fitting lid of the Dewar aids in centering the Raman tube and keeps water vapor out. This is important, since water vapor, when it comes into contact with liquid nitrogen, condenses into tiny ice crystals which cause trouble by falling on the inner window of the Dewar and scattering the radiation from the Raman tube. To prevent this trouble, the Dewar is flushed with dry nitrogen gas before filling, and the pressure inside the Dewar is kept slightly higher than atmospheric pressure by impeding the escape of the boiling nitrogen. Nitrogen is allowed to escape only through a rubber tube which is almost closed with a clamp.

Lamp and Housing Unit

The source unit is a helical "Toronto" type mercury lamp very similar to one described by Kemp, Jones, and Durkee.[1] The discharge column is made of 25 mm Pyrex tubing in the shape of a three-turn helix with inside diameter 10.0 cm. The lamp is difficult to start right after it has been evacuated and filled with mercury; however, after a few hours of operation it starts quite readily when warmed. A mechanical "heat gun" is used for this purpose.

The lamp and flask are mounted in an aluminum box which is attached to a blower for cooling the lamp. Shoulders on the electrodes support the lamp, and the Dewar is cushioned by a felt ring at the top

---

[1] J. W. Kemp, J. L. Jones, and R. W. Durkee, J. Opt. Soc. Am. 42, 811 (1952).

of the box. Originally, the interior of the box was coated with a solution of cellulose gum in water to provide a tacky surface and then smoked with burning magnesium wire to give an internal reflective coating of magnesium oxide. This provided a surface of high diffuse reflectivity, but the air being drawn through the housing caused it to flake off. A much simpler and better method of coating the walls is the following: A white oil base enamel with titanium dioxide as the pigment is mixed in equal parts by volume with fine magnesium oxide powder. This mixture is then simply painted onto the surface. Such a light box surrounding the lamp increases the intensity of irradiation at the center by a factor of about three.

Photographs of the Dewar, lamp, and housing are shown in Figures 2, 3, 4, and 5. These have been shown previously by Jackson[2] who designed and constructed the apparatus jointly with the present writer.

Temperature Control

When the Dewar is filled with a coolant such as liquid nitrogen, there are two methods of controlling the temperature of the sample. One is to control the heat conductivity between the Raman tube and the coolant. The heat conduction in gases at low pressures is linearly proportional to the pressure. The pressure in the vacuum system surrounding the Raman tube can be lowered to 10^{-6} mm of mercury by a small oil diffusion pump, and by disconnecting the pump and adding gas it can be adjusted to the desired value. The second method of controlling the temperature of the

---

[2] J. A. Jackson, Jr., "Vibrational Spectra of Lead Alkyls" (Unpublished Ph. D. dissertation, Dept. of Physics, University of Oklahoma, 1955).

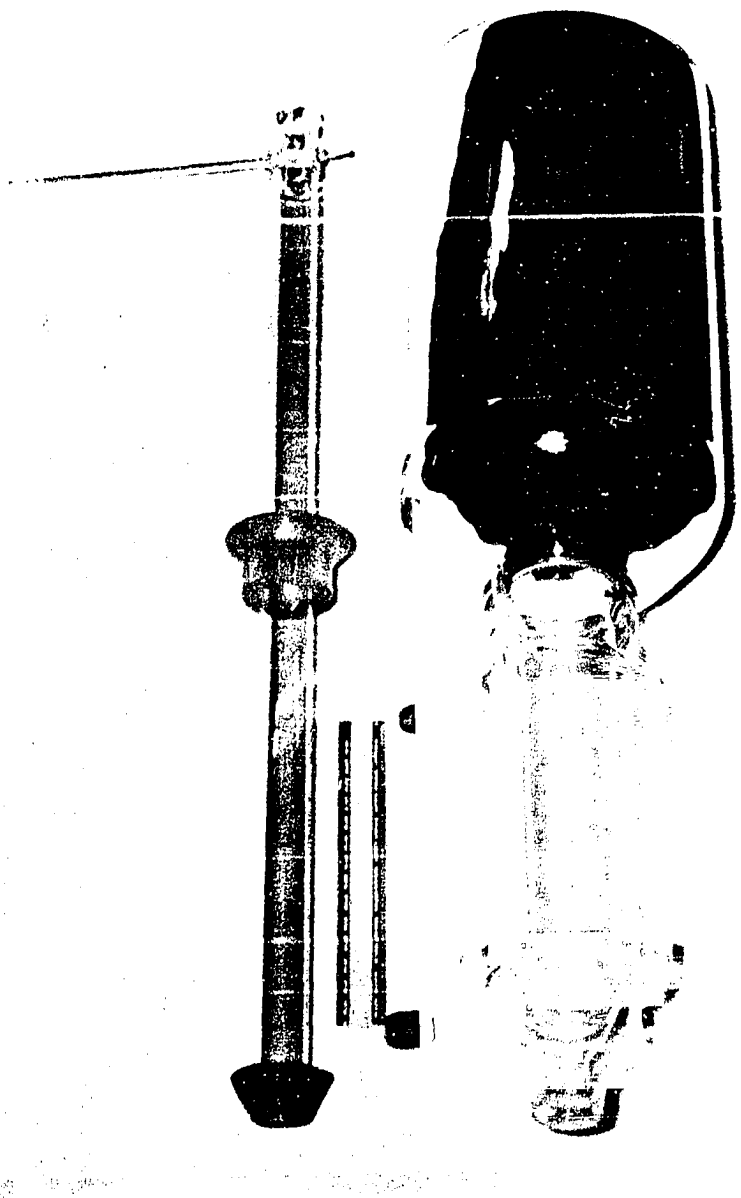

Figure 2

Dewar Flask and Vacuum Jacket

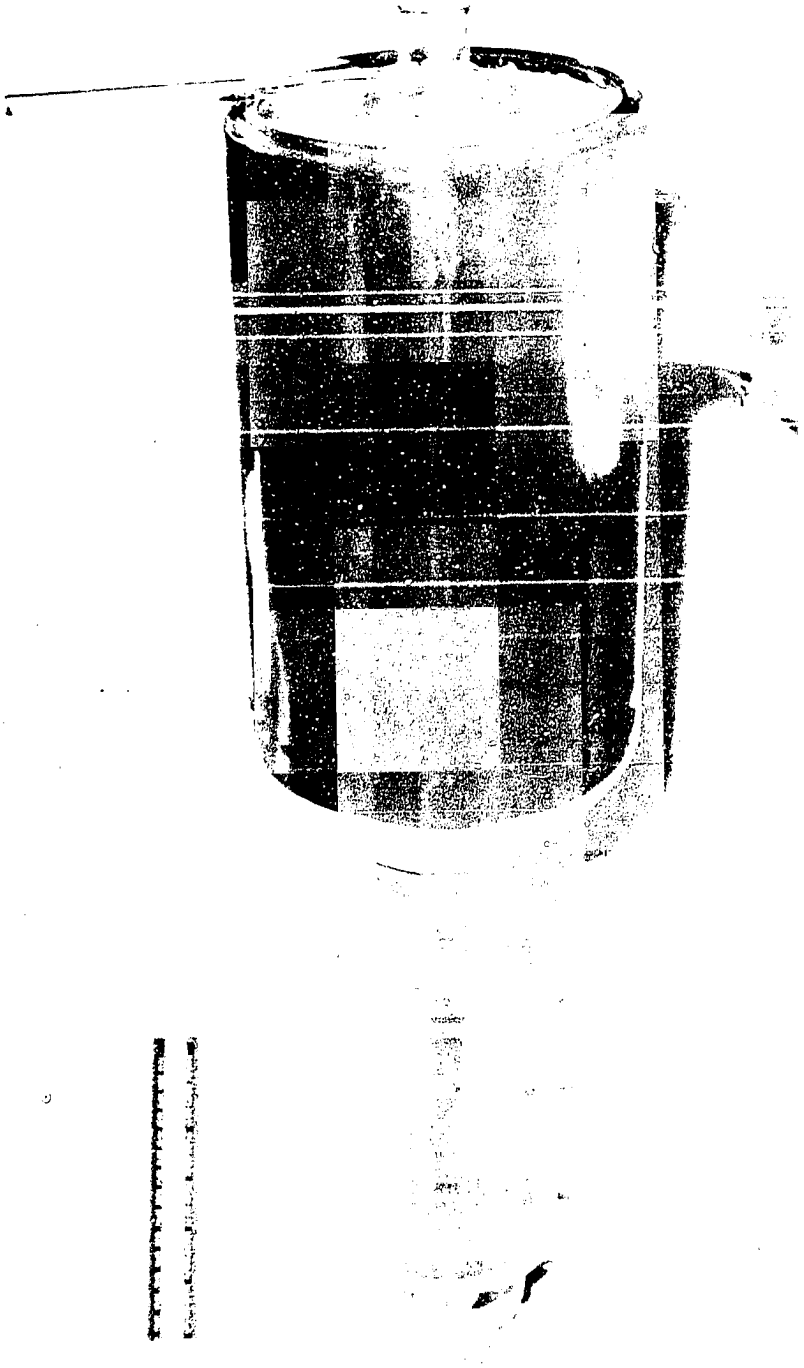

Figure 3

Dewar Flask with Vacuum Jacket Inserted

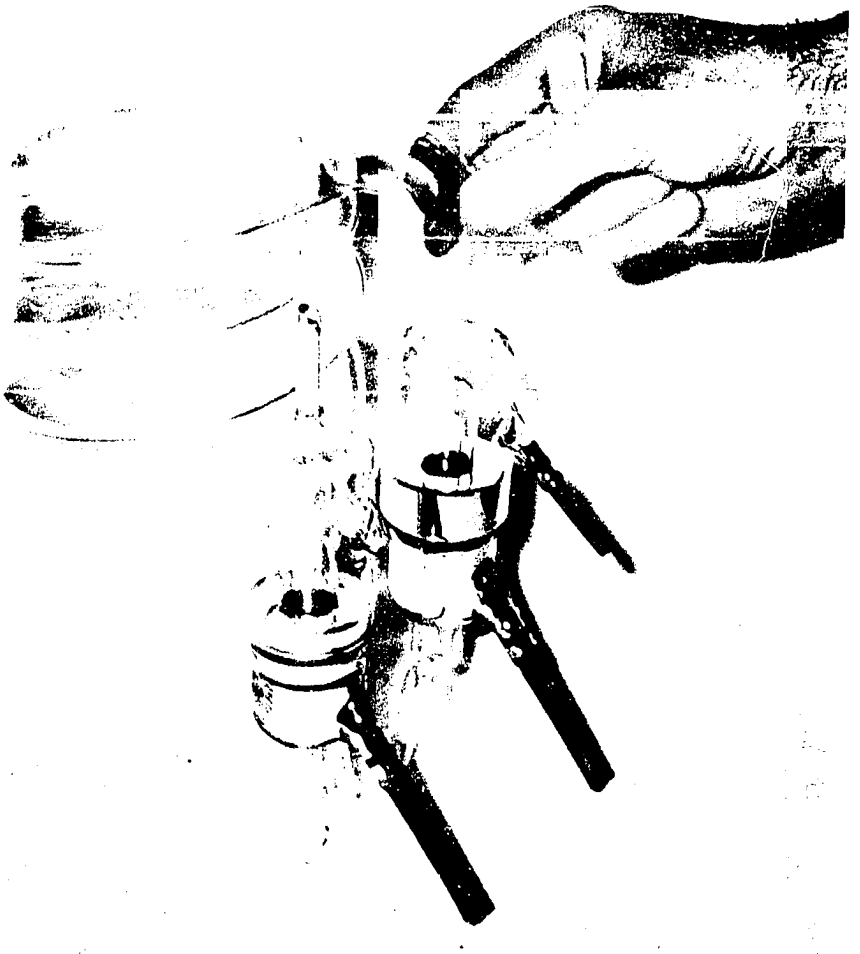

Figure 4

Helical Mercury Lamp for Low Temperature

Raman Irradiation Apparatus

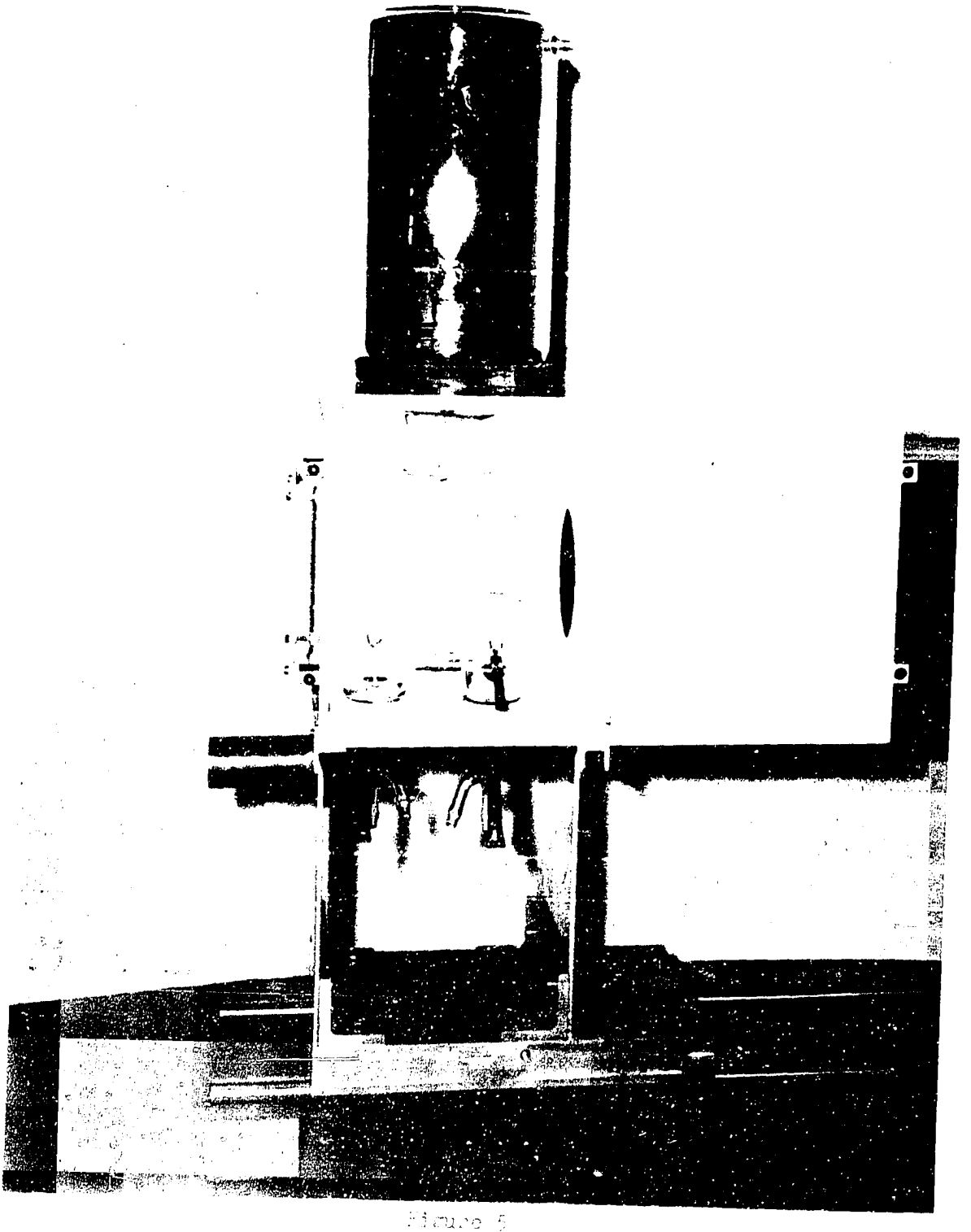

Figure 5

...mperature Apparatus Mounted in Housing

sample is to keep the pressure in the jacket constant and apply heat to the sample by means of a coil of nichrome wire wrapped around the Raman tube.

Immediately below this coil of heating wire and very near the window, a copper-constantan thermocouple is attached. A small copper wire is used to hold this junction securely. Care must be taken that the heating wire and thermocouple do not make contact; therefore, the copper and the constantan wires are carefully coated with many layers of a silicone dielectric. A detailed drawing of the vacuum jacket and the wire-wrapped Raman tube is shown in Figure 6.

Crystal Growth

When the purpose is to study the spectrum of a crystal it is preferable to use a single crystal, since a crystalline aggregate scatters light strongly. The vertical Raman tube makes it possible to grow single crystals from a melt. The procedure is as follows. Good conduction is maintained so that the sample would freeze but for heat being supplied by an internal heating coil. Then as the coil (which originally extends to the Raman window) is slowly raised, a temperature gradient is established, and a crystal begins to form at the window. As the coil rises, the crystal continues to grow to form a long single crystal.

The inner coil which consists of nichrome wire of about 200 ohms is placed inside a 5 mm Pyrex tube. This tube enters the sample system by means of an "O" ring at the top of the Raman tube. A silicone high vacuum grease is used as a lubricant. The 5 mm tube is then raised or lowered at a constant rate by means of a small electric motor. By

VACUUM JACKET WITH INSERTED RAMAN TUBE

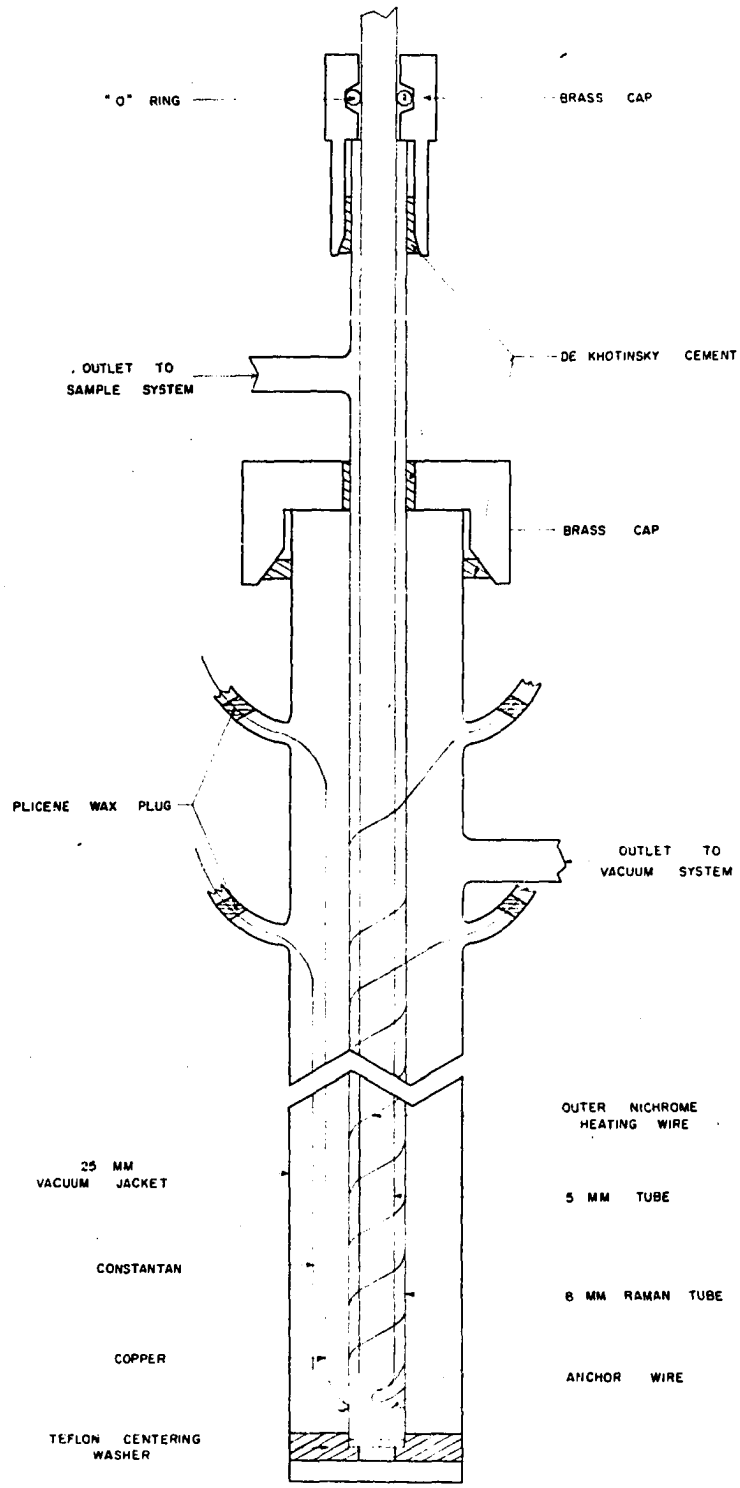

Figure 6

RAMAN TUBE WITH INSERTED HEATING COIL

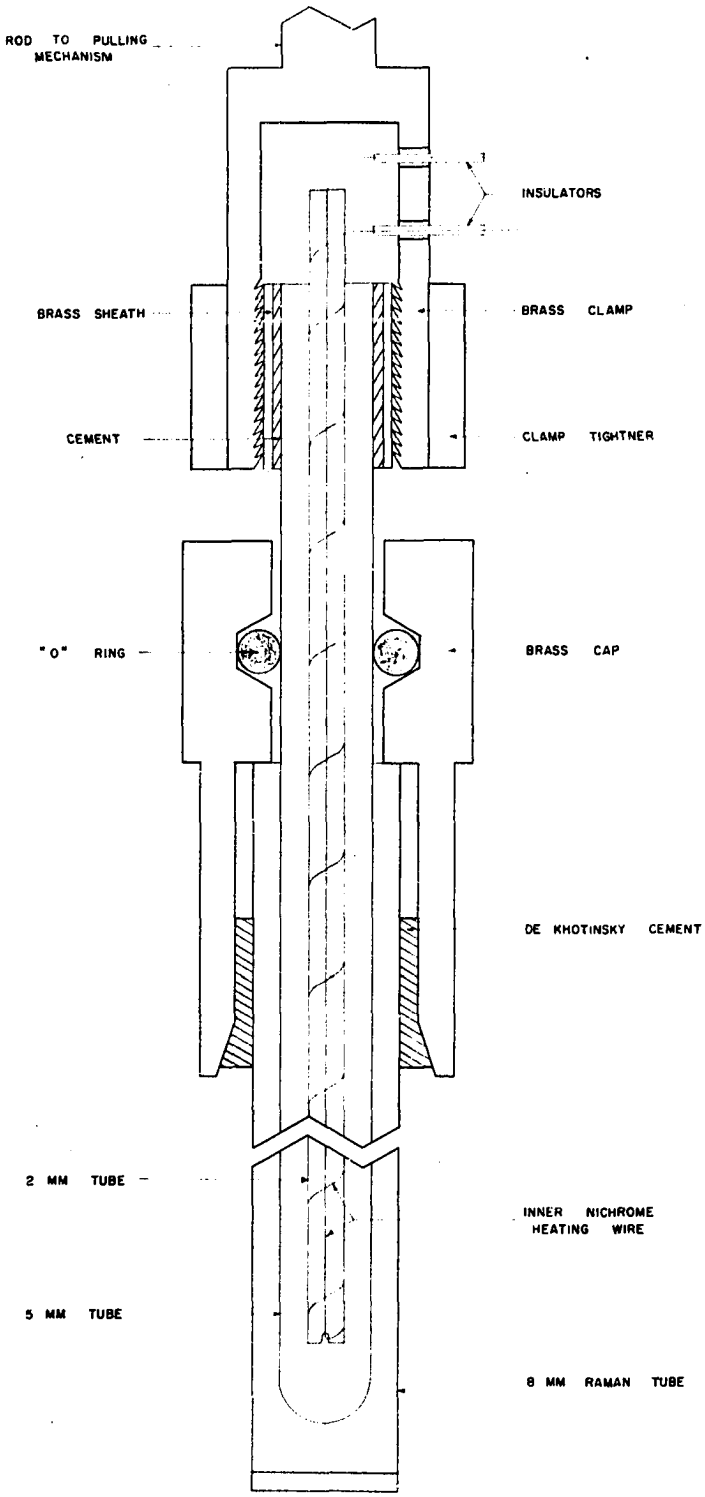

Figure 7

changing the voltage across the motor, the rate can be varied between 0.008 inch/minute and 0.1 inch/minute. The details of the Raman tube with the inserted crystal-growing coil are shown in Figures 6 and 7. A photograph of the drive mechanism is shown in Figure 8.

The Optical System

A schematic drawing of the optical system is shown in Figure 9. Lens L_1 with a focal length of 10.0 cm focuses the window of the Raman tube on the collimator, and lens L_2 with a focal length of 8.0 cm focuses the back of the Raman tube, which is 15 cm from the window, on the slit. The slit of the spectrograph is 19 cm from the Raman window.

A goniometer type mechanism is used for the prism mount. A photograph of the prism mount and lens holder is shown in Figure 10.

The Sample and Vacuum Systems

Both systems are mounted on a single asbestos-backed board which can be easily removed from the optical bench. A photograph of this board is shown in Figure 11. There is a large reservoir mounted on the back and connected to the sample system providing a total volume of 3800 cc. Thus it is possible, ordinarily, to let enough gas into the system at one time to fill the lower part of the 8 mm Raman tube with condensed liquid to a height of about 17 cm. An open end manometer is used to read pressure in the sample system.

The small oil diffusion pump is mounted on the optical bench behind the board. A Pirani gauge is built into the vacuum system to read the pressure. Since operation of the apparatus shows what temperatures can be maintained with different pressure readings, and since it is only

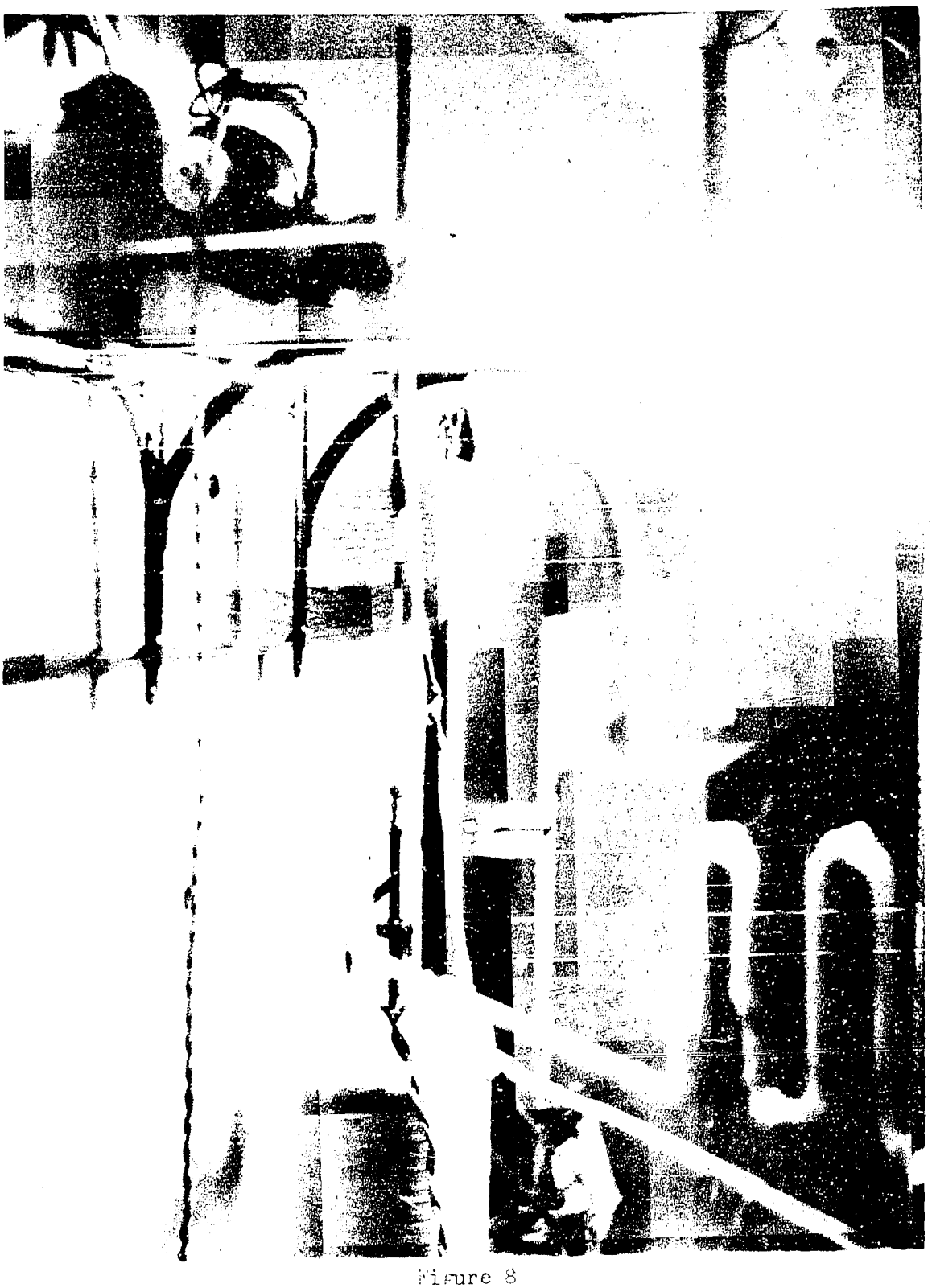

Figure 8

Crystal-Growing Drive Mechanism

OPTICAL SYSTEM

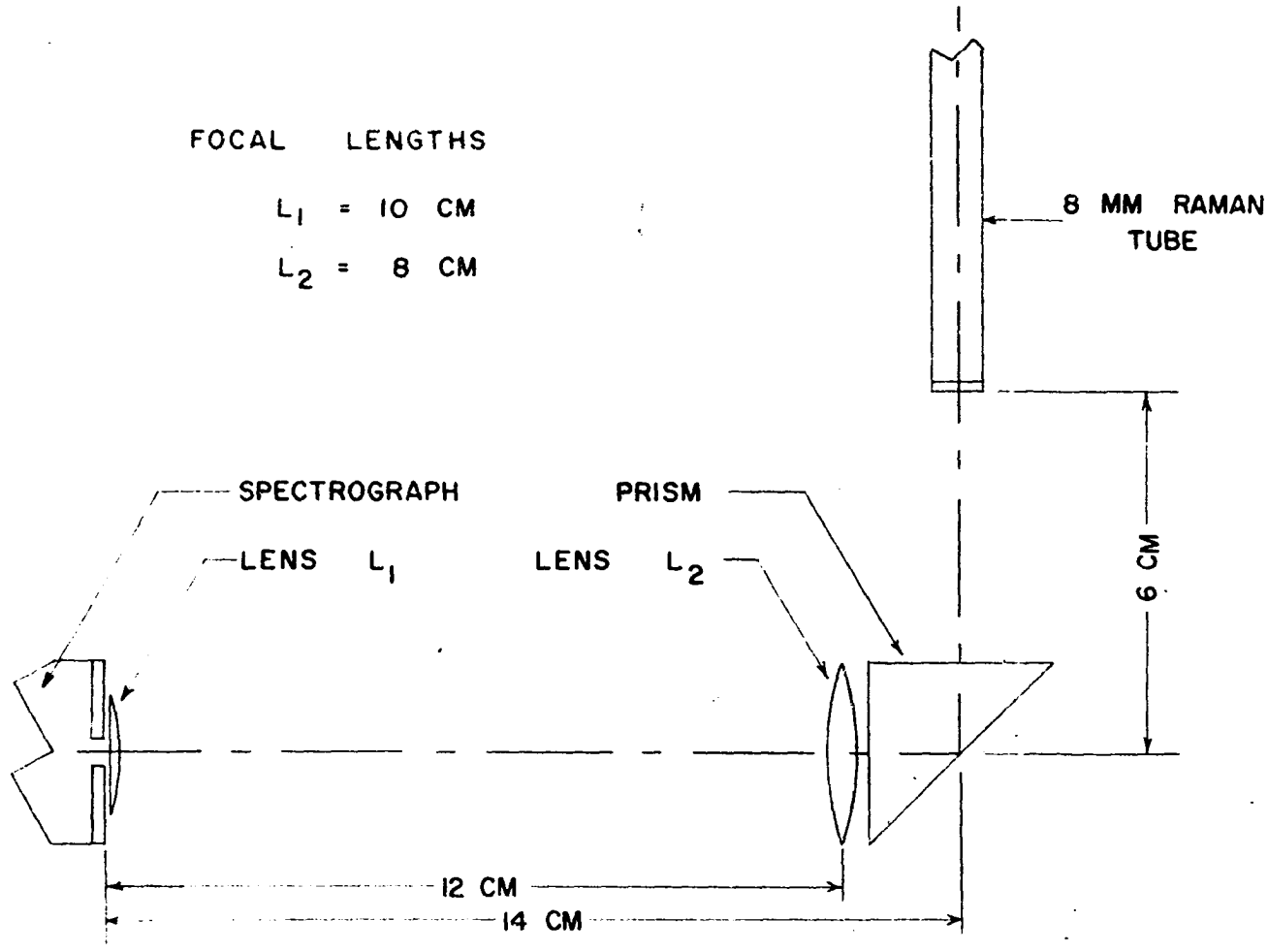

Figure 9

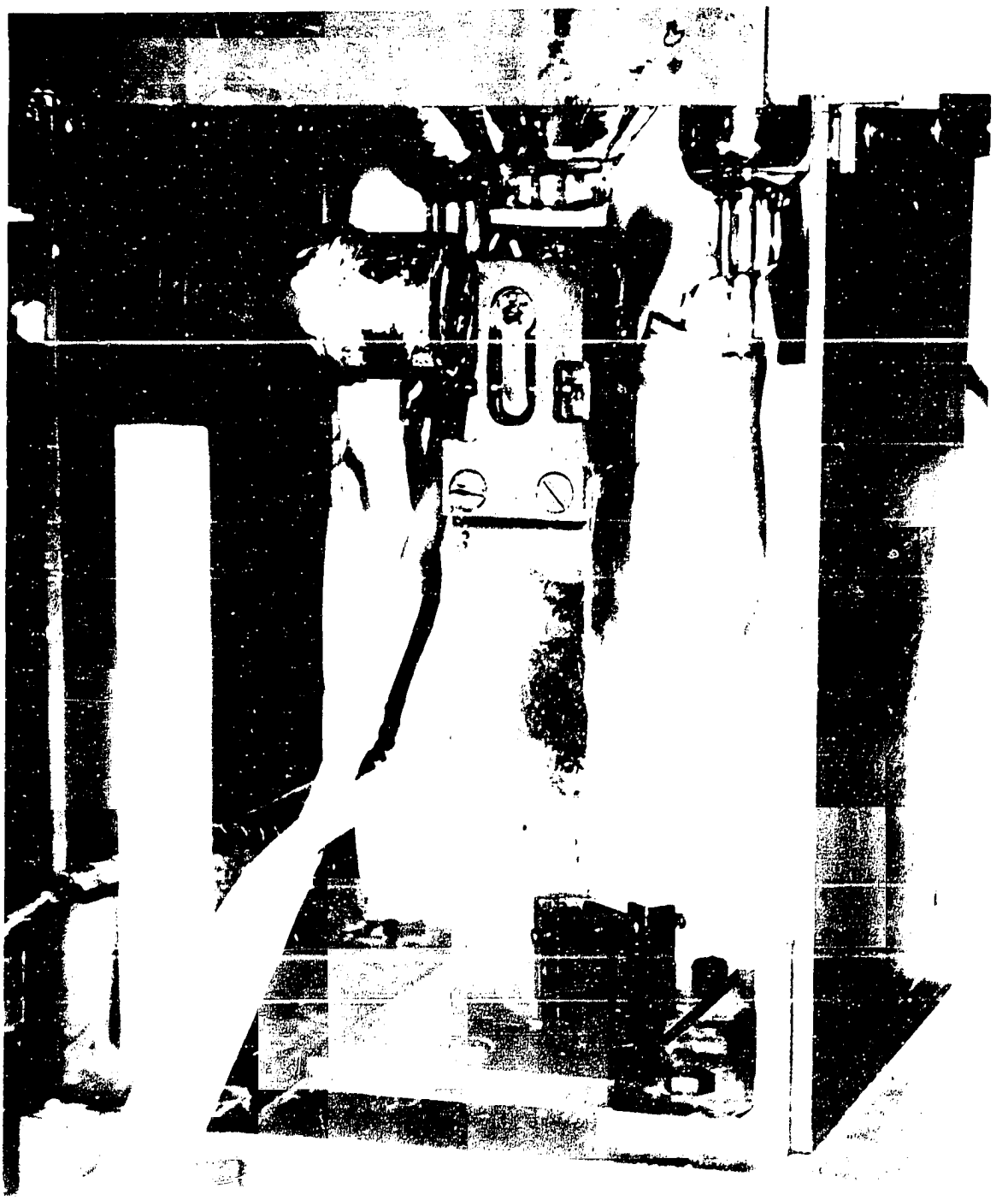

Figure 10

Prism Mount and Lens Holder

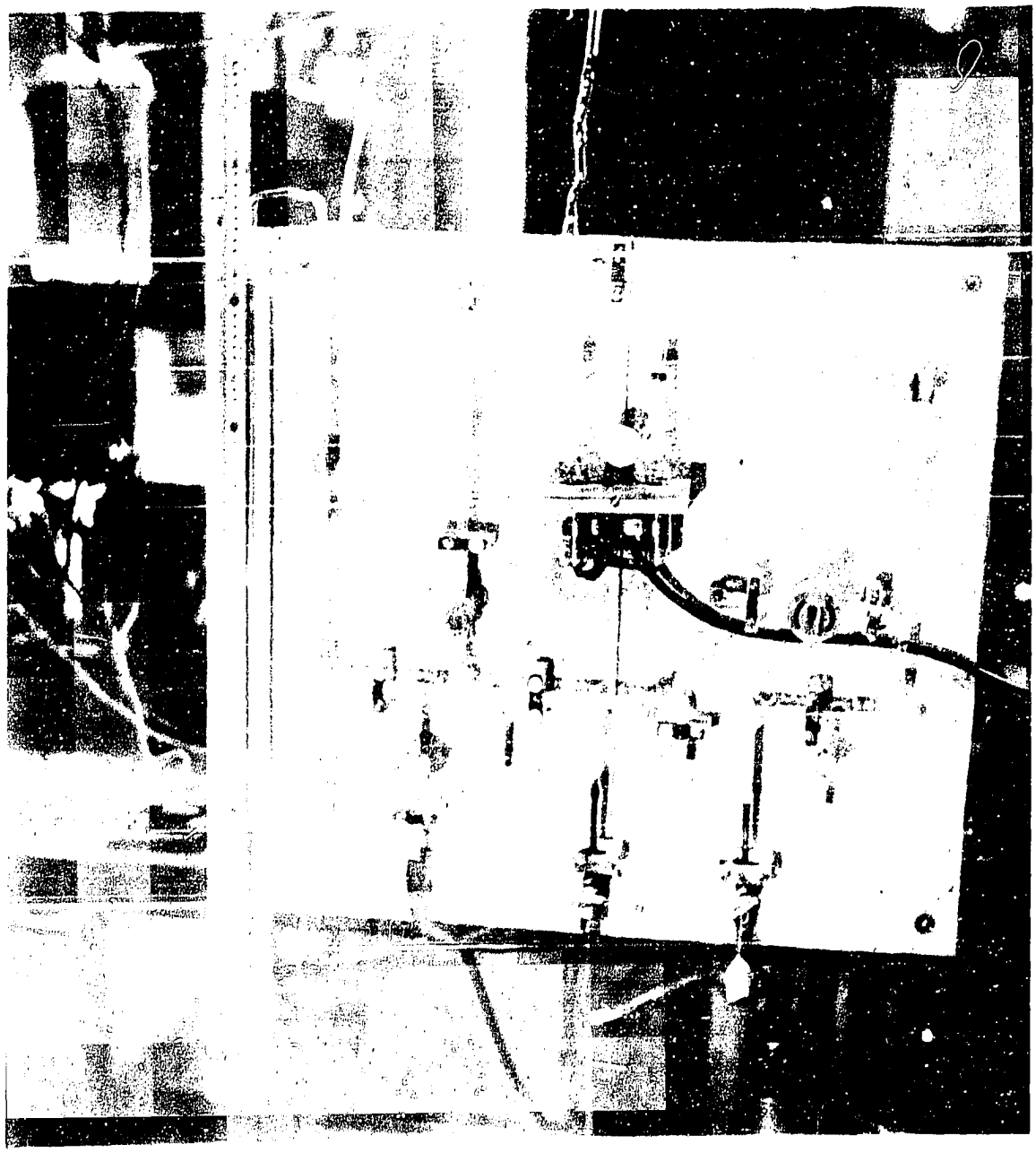

Figure 11

Sample and Vacuum Systems

necessary to be able to repeat the conditions, the gauge need not be calibrated absolutely. A dry nitrogen gas cylinder is attached to this system to supply any pressure needed and to prevent water vapor from condensing on the walls of the vacuum jacket inside the Dewar.

Operation

The calibration of the thermocouple was checked empirically with ether as a sample, liquid nitrogen as the coolant, and a pentane thermometer. Temperature readings were taken at two points, at the Raman window and 15 cm above the window. The lowest temperature read in this manner was -130° C. A temperature difference of about 10° C was found, the window being the coldest part of the Raman tube. A 245 ohm copper-constantan thermocouple was calibrated from 0° C to -200° C with a milliameter having a full scale reading of 0.015 amps.

The vacuum system surrounding the Raman tube was found to be very effective for controlling the temperature. With the best vacuum attainable, the lamp operating on 13 amps, and no current in the heating coil, the sample temperature at the window remained constant at -60° C. Radiation from the lamp adds a considerable amount of heat, but to get temperatures higher than -60° C the heating coil had to be used. However, by simply increasing the pressure, any temperature between -60° C and -185° C could be maintained. One 25 hour exposure was taken at -185° C with nitrogen liquified under pressure in the vacuum jacket.

Only 15 cm of the Raman tube were irradiated, the rest being painted black to reduce stray light getting into the spectrograph. A five minute exposure of C Cl_4 indicated that the speed of the apparatus

was sufficient; however, subsequent work has shown that it is actually slower than desired. This is caused by the many glass-air interfaces between the Raman tube and the spectrograph and the consequent loss of intensity. Since there is at least a 4% loss of intensity at each interface, less than 65% of the light coming from the sample reaches the spectrograph.

Exposures have been taken of several compounds in both the liquid and solid states. However, the attempts at growing single crystals were unsuccessful, and the spectra obtained of samples in the solid state were of crystalline aggregates. Since this method of growing crystals has been used by others, success in its use seems to depend upon the particular substance and perhaps upon the experience of the operator.

For compounds with C-H bonds a one-fourth saturated solution of $NaNO_2$ was used to absorb the set of mercury lines near 4000 A. This prevented the overlapping of Raman bands excited by this set of lines and those excited by the mercury line at 4358 A. Difficulty arose in obtaining the Raman spectra of crystalline aggregates. Crystal powders and aggregates scatter incident radiation so strongly that the continuous background in the region above 4358 A became so strong as to conceal weak Raman bands in the spectra of such substances. Edsall and Wilson[3] have recommended the use of an alcoholic solution of 2 percent p-nitrotoluene and one part in 50,000 of rhodamine 5GDN Extra in a layer 30 mm thick to remove this continuous background. Such a filter completely absorbs the ultraviolet, transmits less than 1 percent of λ

[3] J. T. Edsall and E. B. Wilson, J. Chem. Phys. 6, 124 (1938).

4047 A and about 1 percent of λ4916, while transmitting 70 per cent of more of λ4358. Since the filter jacket of the Dewar is only 1 cm thick, the concentration should be about 1 part in 20,000 of the rhodamine dye. This filter was used in part of this research after obtaining the spectra of crystalline aggregates which had rather strong backgrounds.

Liquid nitrogen was consumed at the rate of one liter every two and one half hours. This was convenient, since the Dewar holds approximately three liters, and once the apparatus was operating properly it required attendance only every six or seven hours to refill the Dewar with liquid nitrogen.

Suggested Improvements

One of the major difficulties in obtaining spectra with the apparatus described is the condensing of water vapor in the liquid nitrogen and the ice crystals covering the window of the Dewar. This trouble could have been eliminated completely if the vacuum jacket within the flask had been made an integral part of the Dewar. If the Dewar had been constructed such that the inner window were also the window of the vacuum jacket then liquid nitrogen would not be between the Raman window and the spectrograph, and the small amount of condensed water would not cause trouble. This arrangement would also eliminate one window, thereby reducing the intensity loss due to glass-air interfaces. A sketch of the proposed change is shown in Figure 12.

MODIFIED DEWAR AND VACUUM JACKET

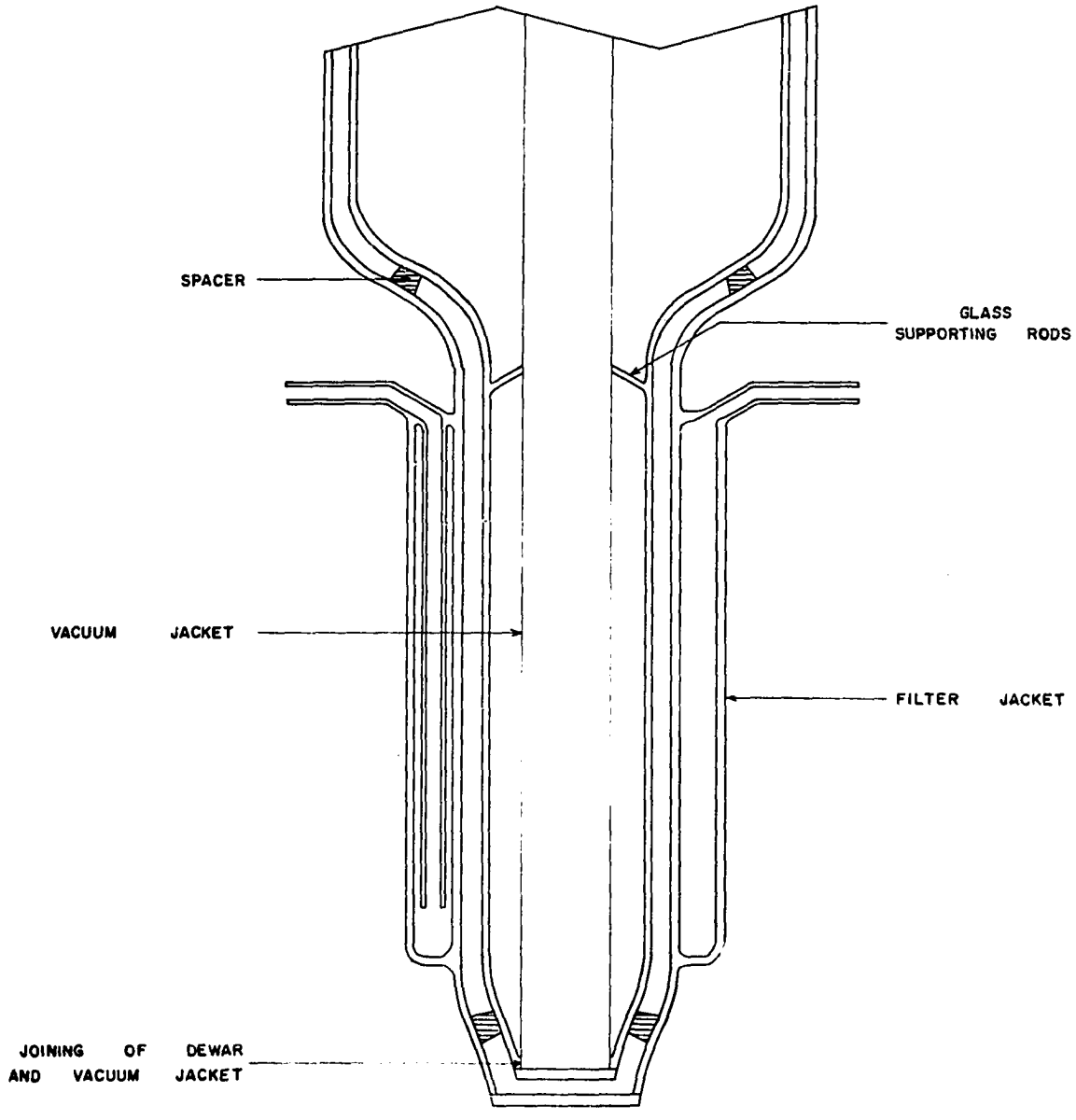

Figure 12

CHAPTER IV

LOW TEMPERATURE RAMAN SPECTRA

The Raman spectra of ethylene oxide, dimethyl ether, and sulphur hexafluoride have been obtained with the low temperature Raman apparatus previously described. The spectrograph used in obtaining these spectra has been described by Classen[1] and Hudson.[2] Eastman Kodak Royal Pan sheet film was used in the photographic recording of the spectra. Developing time was 12 minutes at 20° C in DK-60a. An iron spectrum was photographed beside each Raman spectrum. The film was enlarged 22.5 times, and the frequencies of the Raman bands were determined by linear interpolation using the iron lines as reference points.[1, 2]

The exposure times of the best Raman spectra and the state and temperature of the various compounds when exposed are shown in Table I.

In the tables that record the Raman data, the following abbreviations are used to describe roughly the relative intensities and the general appearance of the bands: s strong, vs very strong, m medium, w weak, vw very weak, vvw, very very weak, sh, sharp, d diffuse, and b broad.

---

[1]H. H. Classen, "Raman Spectra of Some Fluorinated Hydrocarbons" (Unpublished Ph. D. dissertation, Dept. of Physics, University of Oklahoma, 1949).

[2]R. L. Hudson, "Raman Spectra of Some Fluorinated Aromatics" (Unpublished Ph. D. dissertation, Dept. of Physics, University of Oklahoma, 1949).

Table I

Raman Spectra Obtained With

Low Temperature Apparatus

Compound	State	Exposure Time	Temperature
$(CH_2)_2$ O	Liquid	15 Hours	- 50° C
	Crystalline Mass	22 Hours	-140° C
$(CH_3)_2$ O	Liquid	20 Hours	- 60° C
	Crystalline Mass	2 Hours	-160° C
SF_6*		25 Hours	-160° C
	Crystalline Mass	90 Hours	-170° C
		25 Hours	-185° C

*This compound has a transition temperature at -178.8° C

Ethylene Oxide

A number of workers[3-6] have investigated the vibrational spectra of ethylene oxide as a gas and as a liquid. These investigators are in rather good agreement concerning the assignment of fundamentals. The compound had not been studied in the solid state, so it seemed desirable to obtain the Raman spectrum of crystalline ethylene oxide.

Experimental

The sample was obtained from The Matheson Company who list its purity as 99.8%. It has a boiling point of 14° C and a melting point of -112° C.

The Raman spectrum was obtained of both the liquid and crystalline phases with the low temperature Raman apparatus previously described. Attempts to form a single crystal by the method described in connection with the low temperature apparatus were unsuccessful and the spectrum obtained of the solid state was of a crystalline aggregate.

The observed Raman shifts are listed in Table II. Under the column labeled "Interpretation" are given: the designations as used by Lord and Nolin,[7] the approximate characters of the vibrations and

---

[3]R. C. Lord and B. Nolin, J. Chem. Phys. 24, 656 (1956).

[4]H. W. Thompson and W. T. Cave, Trans. Far. Soc. 47, 946 (1951).

[5]Günthard, Messikommer, and Kohler, Helv. Chim. Acta 33, 1809 (1950).

[6]G. Herzberg, Infra-red and Raman Spectra (D. Van Nostrand Company, Ind., New York, 1945), p. 340. The older infrared and Raman work has been summarized and earlier references are cited.

[7]R. C. Lord and B. Nolin, J. Chem. Phys. 24, 656 (1956).

Table II

Raman Spectrum of Ethylene Oxide

Liquid		Crystal		
Wave Number	Description	Wave Number	Description	Interpretation*
502	vvw?	731	vvw, sh	$\nu_8 - \nu_L$? **
		757	vvw, sh	$\nu_8 - \nu_{L'}$? **
		774	vvw, sh	$\nu_8 - \nu_{L''}$? **
797	m	797	m, sh	a_2 CH_2 rocking, (ν_8)
		809	vvw?	
820	w	823	vw, sh	b_2 CH_2 rocking, (ν_{15})
866	m, d	858	w, sh	a_1 Ring Deformation, (ν_5)
		867	vw	b_1 Ring Deformation, (ν_{12})
1121	m	1121	w, sh	a_1 CH_2 Wagging, (ν_4)
1151	w, d	1148	w, sh	b_2 CH_2 Wagging, (ν_{11})
1269	vs, sh	1268	vs, sh	a_1 Ring Breathing, (ν_3)
1467	w	1457	vw	b_1 CH_2 Deformation, (ν_{10})
1492	w	1486	vw	a_1 CH_2 Deformation, (ν_2)
2917	s	2904	w+	$2\nu_{10}$, 2 X 1457 = 2914 (A_1)
2959	s	2947	w+	$\nu_2 + \nu_{10}$, 1457 + 1486 = 2943 (B_1)
3009	vs	3004	s	a_1, b_1 CH Stretching, (ν_1), (ν_9)
3061	s	3062	w, sh	a_2, b_2 CH Stretching, (ν_6), (ν_{13})

* Vibration numbers are those used by Lord and Nolin, J. Chem. Phys. 24, 656 (1956).

** ν_L, $\nu_{L'}$ and $\nu_{L''}$ are assumed to be the lattice frequencies, 66, 40, and 23 cm^{-1}, respectively. Two of the corresponding sum bands are masked and the one expected at 837 cm^{-1} has not been observed.

\+ May be double

(assuming C_{2v} symmetry) the symmetry species of the bands.

The band at 502 cm^{-1} in the spectrum of the liquid is questionable and has not been observed by others. A new Raman band is observed at 1467 cm^{-1} in liquid ethylene oxide, and two bands are resolved at 797 and ~820 cm^{-1}; whereas previously only one at 807 cm^{-1} had been reported in the Raman spectrum.

Interpretation

Assignment of Fundamentals. The molecule is assumed to belong to the point group C_{2v} with the two groups of hydrogen atoms lying in planes perpendicular to the C-O-C plane. The normal vibrations then divide into the following symmetry species: $5a_1 + 3a_2 + 4b_1 + 3b_2$. All are Raman active and, according to the interpretation given in Table II, all have been observed in the Raman spectrum except the two CH_2 twisting fundamentals. The assignment proposed here agrees essentially with that of Lord and Nolin.[8] They have made a complete assignment of the fundamentals on the basis of infrared and Raman data, and the new Raman bands observed in the present investigation support their assignments.

Previously the one Raman band observed at 807 cm^{-1} has been assigned as the a_2 vibration associated with methylene rocking. The b_2 vibration associated with methylene rocking was assigned as the infrared band at 821 cm^{-1}. In the present work these two fundamentals have been resolved at 797 and ~820 cm^{-1} in the Raman spectrum of the liquid and appear as two sharp bands at 797 and 823 cm^{-1} in crystalline ethylene oxide.

---

[8] R. C. Lord and B. Nolin, J. Chem. Phys. 24, 656 (1956). This publication appeared after completion of the present investigation.

Lord and Nolin have assumed that the diffuse Raman band at 866 cm^{-1} in the liquid is a superposition of bands of species a_1 and b_1. Previously it had always been assigned to the species a_1 despite the fact that it was known to be depolarized. Two Raman bands are observed here in the spectrum of the crystal at 858 and 867 cm^{-1} which tends to confirm the assignment of Lord and Nolin. Both are associated with ring deformation vibrations, and 858 cm^{-1} is assigned to species a_1 and 867 cm^{-1} to species b_1.

The Raman band found at 1467 cm^{-1} in the liquid and 1457 cm^{-1} in the crystal has not been previously observed, although a corresponding band is found at 1470 cm^{-1} in the infrared spectrum of the gas. It is interpreted as the CH_2 deformation vibration of species b_1. It is puzzling that others have not observed this frequency in the Raman spectrum, since it appears with almost the same intensity as the band at 1492 cm^{-1} which has been observed.

There seems to be no evidence in the Raman spectrum for the two CH_2 twisting fundamentals. However, they have been assigned previously[9] from infrared data and heat-capacity measurements[10] as 1143 (b_1) and 1345 (a_2) cm^{-1}.*

Effects of the Crystal Lattice. The three frequencies observed at 731, 757, and 774 cm^{-1}, in the crystal spectrum are undoubtedly associated with the crystal lattice. The crystal structure of ethylene oxide

---

[9]R. C. Lord and B. Nolin, J. Chem. Phys. 24, 656 (1956).

[10]G. B. Kistiakowsky and W. W. Rice, J. Chem. Phys. 8, 610 (1940).

*This latter frequency is determined from the assignment of the other fundamentals and the heat-capacity measurements.

is not known, but if these are difference bands involving 797 cm^{-1} and the lattice vibrations, the values of these lattice frequencies can be determined by taking the difference between each combination band and the ground state transition 797 cm^{-1}. This gives 66, 40, and 23 cm^{-1}, respectively, as possible lattice frequencies. Two of the corresponding sum bands are masked and the third is not observed.

A doubtful band which may be spurious was observed at 809 cm^{-1} in the spectrum of the crystal.

Dimethyl Ether

Introduction

The Raman spectrum of dimethyl ether in the liquid state has been obtained previously several times.[11-15] The results of these investigations have been summarized by Crawford and Joyce[16] who also obtained the infrared spectrum of the gas between 2.5 and 22.5 μ. Earlier, Coblentz[17] had observed the infrared spectrum of the gas, and recently Hadni[18] observed the infrared spectrum of gaseous dimethyl ether from 8

---

[11] A. Dadieu and K.W.F. Kohlrausch, Monatsh. f. Chemie 57, 225 (1931).

[12] S. C. Sirkar, Ind. J. Phys. 7, 257 (1932).

[13] K. W. F. Kohlrausch, Monatsh. f. Chemie 68, 349 (1936).

[14] R. Ananthakrishnan, Proc. Ind. Acad. Sci. A5, 285 (1937).

[15] M. Wolkenstein and Ya. K. Syrkin, Nature 139, 288 (1937).

[16] B. L. Crawford, Jr. and L. Joyce, J. Chem. Phys. 7, 307 (1939).

[17] W. W. Coblentz, Investigations of Infrared Spectra (Carnegie Institute of Washington, 1905), Part I.

[18] A. Hadni, C. R. Acad. Sci. 239, 349 (1954).

to 42μ with better resolution. In the present work the Raman spectra in the liquid and the crystalline states were obtained with the low temperature apparatus previously described.

The sample (b.p. -23.7° C, m.p. -138.5° C) was obtained from The Matheson Company. The purity was listed as 99.5% with a trace of methanol and water.

Results

The observed Raman shifts are listed in Table III. In the third column the Kohlrausch symbols are used to identify the exciting mercury line. Several unsuccessful attempts were made to form a single crystal of dimethyl ether; consequently, the spectrum obtained is that of a crystalline aggregate. Three bands, previously unobserved in the Raman spectrum of the liquid, are found at 1475, 2753, and 2881 cm^{-1}. The strong C-H stretching vibrations are observed by k excitation despite the use of a $NaNO_2$ filter. These k excited frequencies overlap and cause uncertainty in some of the lower frequencies excited by the e line.

Interpretation

The molecule undoubtedly has the symmetry C_{2v}, and the normal vibrations divide themselves as follows: $7a_1 + 4a_2 + 4b_1 + 6b_2$. All symmetry species are Raman active and all but a_2 are infrared active.

There is good agreement among previous investigators[19] on the assignment of the fundamentals associated with the C-O-C vibrations. The two fundamentals involving principally C-O stretching are identified with

[19] G. Herzberg, Infrared and Raman Spectra (D. Van Nostrand Company, Ind., New York, 1945), p. 353.

Table III

Raman Spectrum of Dimethyl Ether

Liquid			Crystal		
Wave Number	Description	Exciting Line	Wave Number	Description	Interpretation
918	s	e	921	vw	a_1 C-O Stretching
*1097	m (?)	e	*1100	vw (?)	b_1 C-O Stretching
*1151	m, d (?)	e	*1162	vvw (?)	a_1, b_1, a_2, b_2 CH_3 rocking
1445	m, d	e	1443	vvw	a_1, b_1 asym. CH_3 deformation
1475	w	e	1485	vvw	a_2, b_2 asym. CH_3 deformation
2753	vw	e			2 X (1375)+ (A_1)
2813	vs	e, k, i	2814 2824	m m	a_1 sym. C-H stretching b_1 sym. C-H stretching
2865	m	e, k, i			a_2, b_2 asym. C-H stretching
2881	w	e, k, i			2 X 1445 = 2890 (A_1)
2918	m	e, k	2913	m	b_1 asym. C-H stretching
2954	vw	e, k	2931	vw	2 X 1475 = 2950 (A_1)
2986	s	e, k	2986	m	a_1 asym. C-H stretching

*These shifts are uncertain in the Raman spectrum since they are overlapped, respectively, by 2865 and 2918 cm^{-1} excited by the k line of mercury.

+ The band at 1375 cm^{-1} is unobserved, but the overtone of this symmetric CH_3 deformation vibration is expected to be stronger than the fundamental.

the two Raman bands at 918 and 1097 cm^{-1}. The stronger one at 918 cm^{-1} is ascribed to species a_1, and 1097 cm^{-1} to species b_1. The C-O-C bending vibration has been assigned previously at 412 cm^{-1} but was not observed in the present work.*

The assignments of the rest of the fundamentals are less certain. The proposed assignments given in this investigation are shown in Table III. The new Raman band observed at 1475 cm^{-1} in the spectrum of the liquid and at 1485 cm^{-1} in the spectrum of the crystal is interpreted as the overlapping of the two asymmetric CH_3 deformation vibrations of species a_2 and b_2. The two asymmetric CH_3 deformation vibrations of species of a_1 and b_1 are also assumed to overlap and are identified with the Raman band observed at 1445 cm^{-1} in the liquid and at 1443 cm^{-1} in the crystal.

The two symmetric CH_3 deformation vibrations have probably not been observed but are expected to lie near 1380 cm^{-1}. Since the overtones of symmetric CH_3 deformation frequencies have been observed to be stronger than the fundamentals in the Raman spectra of other compounds,[20] the new Raman band observed at 2753 cm^{-1} is assumed to be the overtone of one or both of these two overlapping fundamentals. There are six C-H stretching fundamentals. The two symmetric vibrations are assumed to overlap at 2813 cm^{-1} in liquid dimethyl ether and to split into two bands at 2814 and 2824 cm^{-1} in the crystal. The five remaining bands in the region of

---

*C. W. Gullikson of this laboratory has recently obtained the Raman spectrum of the gas and has observed this band at 410 cm^{-1}.

[20] D. C. Smith, G. M. Brown, J. R. Nielsen, R. M. Smith, C. Y. Liang, J. Chem. Phys. 20, 473 (1952).

2900 cm^{-1} are associated with the four asymmetric C-H stretching vibrations and overtones of CH_3 deformation frequencies in resonance with the fundamentals.

The only two fundamentals unassigned are the two CH_3 twisting vibrations of species a_2 and b_2. Recently Hadni[21] observed a band at 270 cm^{-1} in the infrared spectrum of the gas. The contour of this band indicates that it is the b_2 twisting vibration. Pitzer[22] has proposed that the Raman band at 160 cm^{-1}, observed only by Ananthakrishnan,[23] is the other CH_3 twisting vibration. This frequency is very questionable, however. Ananthakrishnan lists it as polarized; whereas a_2 vibrations should be depolarized. He does not give the experimental procedure used, but if the e line was used for excitation, it is quite likely that this band is the very strong polarized C-H stretching frequency at 2810 cm^{-1} excited by the mercury line at λ3906.

Some of the assignments of dimethyl ether are rather uncertain because of the large amount of overlapping of fundamentals. It would be desirable to obtain the infrared spectrum of the liquid with moderate dispersion to resolve some of these close fundamentals, if possible.

Sulphur Hexafluoride

Introduction

A considerable amount of work has been done previously on the

---

[21] A. Hadni, C. R. Acad. Sci. 239, 349 (1954).

[22] K. S. Pitzer, J. Chem. Phys. 10, 605 (1942).

[23] R. Ananthakrishnan, Proc. Ind. Acad. Sci. A5, 285 (1937).

vibrational spectra of sulphur hexafluoride.[24-32] These investigations and electron diffraction measurements[33, 34] have shown that the molecule has the octahedral symmetry O_h. The selection rules for this highly symmetrical structure permit only three active Raman fundamentals and two active infrared fundamentals for SF_6. Eucken and Ahrens[35] and Yost, Steffens, and Gross[36] have observed the three Raman-active fundamentals in the liquid state, but only the strongest frequency in the Raman spectrum of the gas. Lagemenn and Jones[37] have observed the infrared spectrum of the gas.

Since SF_6 has a transition at -178.8° C it was decided to investi-

---

[24]A. Eucken and H. Ahrens, Z. physik. Chem. B26, 297 (1934).

[25]D. M. Yost, C. C. Steffens, and S. T. Gross, J. Chem. Phys. 2, 311 (1934).

[26]J. Weiler, Anal. Phys. 23, 493 (1935).

[27]F. Matossi, Ergeb. exakt. Naturwiss. 8, 109 (1938).

[28]K. W. F. Kohlrausch, Hand.-u. Jahrb. d. chem. Phys. B9 VI (1943).

[29]M. T. Lagemann and E. A. Jones, J. Chem. Phys. 19, 534 (1951).

[30]D. Edelson and K. B. McAfee, J. Chem. Phys. 19, 1311 (1951).

[31]A. DeLattre, J. Chem. Phys. 20, 520 (1952).

[32]J. Gaunt, Trans. Far. Soc. 49, 1122 (1953).

[33]H. Braune and S. Knoke, Z. physik. Chem. B21, 297 (1933).

[34]L. O. Brockway and L. Pauling, Proc. Nat. Acad. Sci. U.S. 19, 68 (1933).

[35]A. Eucken and H. Ahrens, Z. physik. Chem. B26, 297 (1934).

[36]D. M. Yost, C. C. Steffens, and S. T. Gross, J. Chem. Phys. 2, 311 (1934).

[37]R. T. Lagemann and E. A. Jones, J. Chem. Phys. 19, 534 (1951).

gate the Raman spectrum of the crystal at the two temperatures, -160° C and -185°C. Only two Raman bands were observed so, a much longer exposure, using the Rhodamine filter previously mentioned, was taken at -170° C and all three fundamentals were observed. A more complete Raman spectrum of the gas was obtained by C. W. Gullikson of this laboratory. This Raman data for gaseous sulphur hexafluoride will be included in this report.

Experimental

The sample was obtained from the Matheson Company, who listed its purity as 99%. It has a sublimation point at -63.8° C under normal conditions. Since pressure is required to liquify SF_6, an attempt was made to grow a single crystal by sublimation. This was not successful, and the Raman spectrum of a crystalline mass was obtained with the aid of the low temperature Raman apparatus previously described.

The spectrum of the gas was obtained with a multiple reflection, four-mirror Raman tube for gases designed and constructed in this laboratory by C. W. Gullikson. It is similar to one designed by Welsh, Cumming, and Stansbury[38] at the University of Toronto. The spectrum was obtained with 4 atmospheres of pressure in the tube and with exposure times of 12, 35 and 70 hours.

Results

The observed Raman shifts for crystalline SF_6 are given in Table IV, and the observed shifts for the gas are given in Table V. In the third column of this table the exciting mercury lines are given by their

---

[38] H. L. Welsh, C. Cumming, and E. J. Stansbury, J. Opt. Soc. Am. 41, 712 (1951).

Table IV

Raman Spectrum of Crystalline Sulphur Hexafluoride

-170° C 90 Hours		-160° C 25 Hours		-185° C 25 Hours		
Wave Number	Description	Wave Number	Description	Wave Number	Description	Interpretation
505	vw					
521	vw	523	vw	521	vw	f_{2g} fundamental, ν_5
543	vvw					
639	vw					e_g fundamental, ν_2
771	s	773	m	772	m	a_{1g} fundamental, ν_1

Table V

Raman Spectrum of Gaseous SF_6

Wave Number	Description	Exciting Line	Interpretation
515	w, d	e	f_{1g} fundamental, (ν_5)
529	w	e	
628	w, d	e	e_g fundamental, (ν_2)
639.5	w, sh	e	
652	w, d	e	
690	vvw	e	2 X [344]* = 688 ($A_{1g} + E_g + F_{2g}$)
769.4	vs	e, f, g, k, i	a_{1g} fundamental, (ν_1)
~809	vvw (?)	e	

*This is the value suggested by Gaunt for the Raman and infrared inactive vibration of species f_{2u}.

Microphotometer Tracing of the Raman Spectrum of Gaseous SF_6

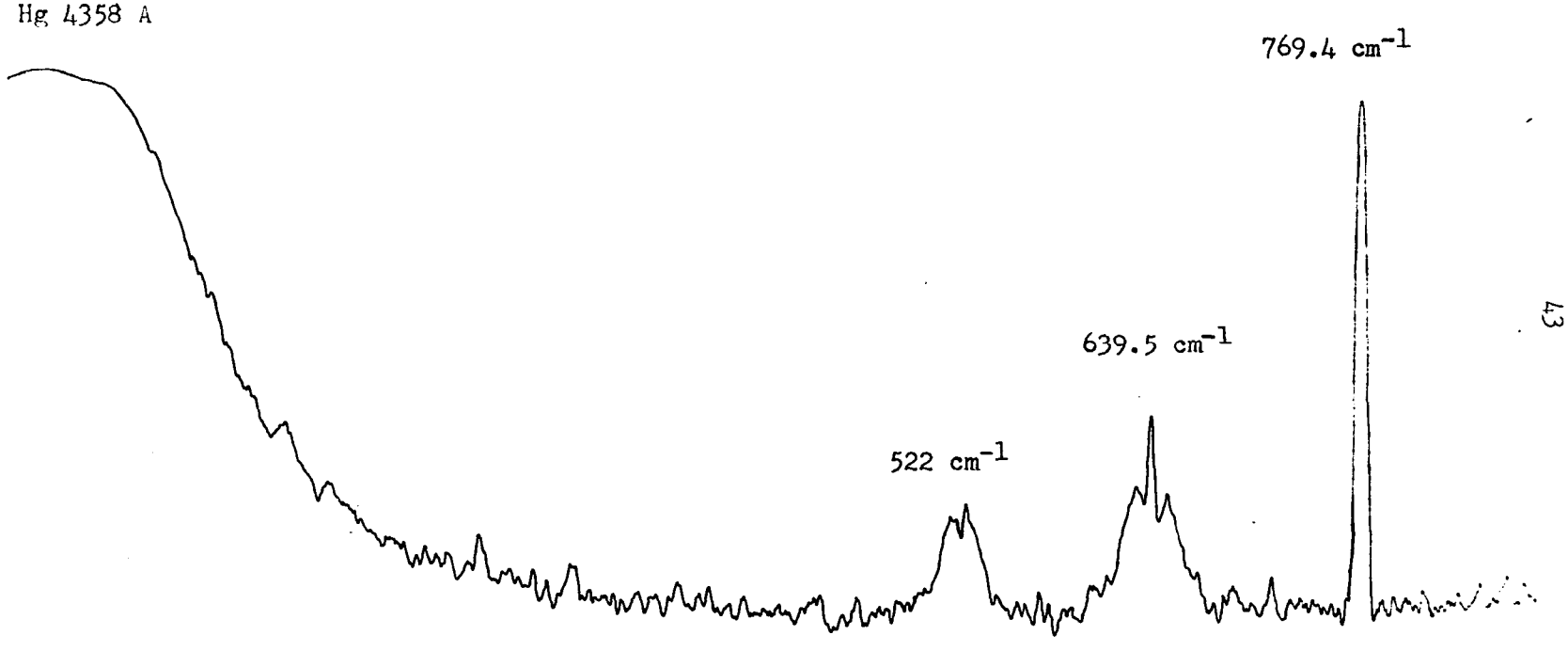

Figure 13

Kohlrausch symbols. A microphotometer tracing of the 12 hour exposure of the gas is reproduced in Figure 13.

The transition at -178.8° C seemed to have very little, if any, effect upon the Raman spectrum. The 90 hour exposure showed all three fundamentals with only slight shifts from the values obtained in the liquid and gaseous state. In addition, two new bands were observed at 505 and 554 cm^{-1}.

Discussion

Gas. The controur of the three Raman fundamentals can be seen from the microphotometer tracing in Figure 13. The a_1 fundamental observed at 776.4 cm^{-1} showed no rotational branches even in the longest exposure and was very accurately measured. This single sharp line is expected in the gas; since, for totally symmetric Raman lines of spherical top molecules the selection rule for J is $\Delta J = 0$,[39] and all of the Q lines are superimposed. The band at 639.5 cm^{-1} has a sharp maximum and two symmetrical diffuse rotational branches. It is assigned as the e_g fundamental. The f_{2g} vibration is associated with the diffuse Raman band with center at 522 cm^{-1} and two maxima at 515 and 529 cm^{-1}.

The observation of the band at 690 cm^{-1} is quite valuable, since it is undoubtedly the overtone of the infrared and Raman inactive f_{2u} fundamental. Eucken and Ahrens[40] have computed this fundamental from

---

[39] Z. Placzek and E. Teller, Z. Physik 81, 209 (1933). These authors have not considered the octahedral molecule, but the selection rule holds in this case also, since during the vibrational motion, the polarizability ellipsoid remains a sphere.

[40] A. Eucken and H. Ahrens, Z. physik. Chem. B26, 297 (1934).

specific heat measurements to have the value 363 cm^{-1}. However, this seems to be 10-20 cm^{-1} high as has been pointed out by Edelson and McAfee.[41] Gaunt[42] has suggested the value 344 cm^{-1} for this frequency which is more useful for explaining combination bands in the infrared spectrum.[43] This value has been fully confirmed by the present investigation.

The weak band at 809 cm^{-1} was observed only on the longest exposure and is questionable.

The normal vibrations of the octahedral SF_6 molecule and the frequencies of each as determined from the Raman and infrared* spectra of the gas are shown in Figure 14.

Crystal. The Raman spectra of all three phases are compared in Table VI. The data for the liquid state were obtained by Yost et al.[44] and by Eucken and Ahrens.[45] There is apparently little change in the values of the three fundamental frequencies as SF_6 changes phase. However, the appearance of new bands at 505 and 543 cm^{-1} in the spectrum of the crystal is very interesting. Unfortunately the crystal structure is not known, and consequently, no interpretation of the new bands can

---

[41]D. Edelson and K. B. McAfee, J. Chem. Phys. 19, 1311 (1951).

[42]J. Gaunt, Trans. Far. Soc. 49, 1122 (1953).

[43]R. T. Lagemann and E. A. Jones, J. Chem. Phys. 19, 534 (1951).

[44]D. M. Yost, C. C. Steffens, and S. T. Gross, J. Chem. Phys. 2, 311 (1934).

[45]A. Eucken and H. Ahrens, Z. physik. Chem. B26, 297 (1934).

*The value of ν_3 is the average of that given by Edelson and McAfee, Lagemann and Jones, and Gaunt, while ν_4 is the average of that given by the latter two.

NORMAL VIBRATIONS OF SULFUR HEXAFLUORIDE

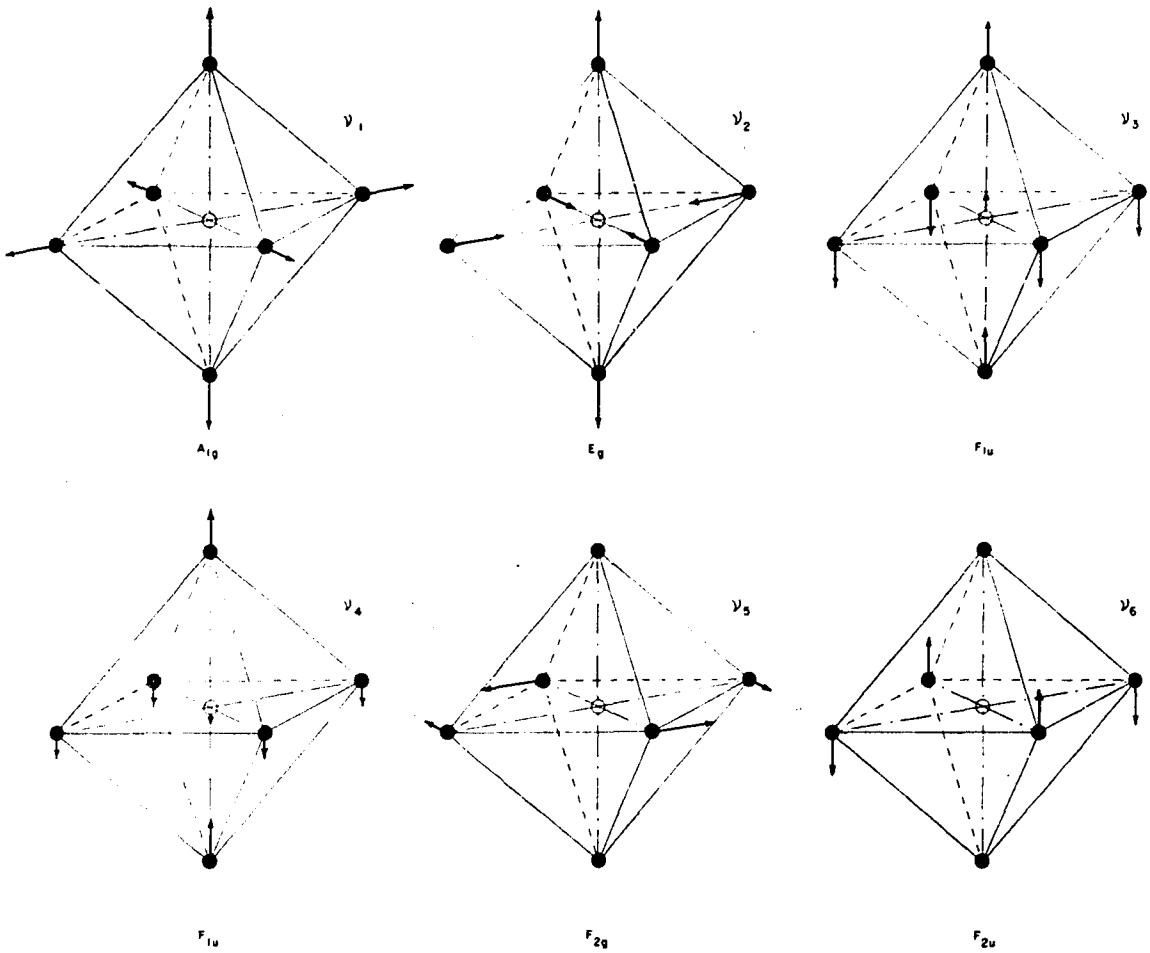

● - FLUORINE
○ - SULFUR

ONLY ONE COMPONENT OF EACH DEGENERATE VIBRATION IS SHOWN

BELOW ARE THE FREQUENCIES AS DETERMINED FROM THE GAS

ν_1 = 769.4 CM^{-1} ν_2 = 639.5 CM^{-1} ν_3 = 941 CM^{-1}

ν_4 = 614 CM^{-1} ν_5 = 522 CM^{-1} ν_6 = 344 CM^{-1}

Figure 14

Table VI

Comparison of the Raman Spectra of SF_6 in Different States of Aggregation

	Gas		Liquid*		Crystal	
Designation	Wave Number	Description	Wave Number	Description	Wave Number	Description
					505	vw
ν_5	515	w, d				
	529	w	524	w	522	vw
					543	vvw
ν_2	628	w, d				
	639.5	w, sh	644	w	639	vw
	652	w, d				
ν_1	769.4	vs	776	vs	772	s

*Liquid data is taken from Yost et al. and Eucken and Ahrens.

be given. It is possible that the three bands 505, 521, and 543 cm^{-1} represent a splitting of the triply degenerate f_{2g} fundamental found at 529 cm^{-1} in the gas.

It would be desirable to obtain the infrared spectrum of the crystal as well as a more complete Raman spectrum. With the present apparatus, however, the latter would be very difficult.

CHAPTER V

VIBRATIONAL SPECTRA OF TRIOXANE

Introduction

The only previous Raman data of trioxane were obtained in CCl_4 solution by Kahovec and Kohlrausch.[1] Ramsay[2] obtained the infrared spectrum of trioxane vapor and of trioxane in CCl_4 solution. He compared the observed frequencies with the number of frequencies permitted by selection rules for various configurations of the molecule and concluded that it has the "chair" configuration of symmetry C_{3v}. Decius, Steele, and Snyder[3] later used a Li F prism to get better resolution of the infrared spectrum of the gas in the region from 3.2 to 3.7 μ. The most complete infrared data available in the literature, both for liquid and gaseous trioxane, have been recorded at the Naval Research Laboratory.[4] The infrared data obtained at N.R.L. for liquid trioxane are listed in Table VI and have been used in the present work.

The assignment of fundamentals has been based primarily upon

---

[1] L. Kahovec and K. W. F. Kohlrausch, Z. physik. Chem. B35, 29 (1937).

[2] D. A. Ramsay, Trans. Far. Soc. 44, 289 (1948).

[3] J. C. Decius, W. C. Steele, and R. G. Snyder, J. Chem. Phys. 19, 806 (1951).

[4] American Petroleum Research Institute Project 44, National Bureau of Standards, N.R.L., Washington, D.C., Serial nos. 830, 831, and 832 (1949).

band contours, intensities, and selection rules, but also upon correlation with fundamentals of some other molecules that are similar to trioxane in certain respects. This correlation has been particularly valuable, since the selection rules for trioxane are not very restrictive and hence not very useful for making the assignments.

Experimental

The sample, in the form of a crystalline aggregate, was kindly furnished by the Celanese Corporation. Its purity was not given. It has a sublimation temperature of 46° C and a melting point 64° C.

Raman Spectrum

Liquid. Trioxane decomposes readily upon heating into a white cloudy substance, presumably paraformaldehyde. For this reason the preparation of the sample to obtain the Raman spectrum of the liquid state was more difficult than expected. Trioxane sublimes readily onto the window and walls of the Raman tube, and when the sample is heated and melted the solid part clinging to the window and walls tends to polymerize. A procedure which proved successful in preventing polymerization is the following: The Raman tube is initially wrapped with nichrome wire and thus heated directly to keep the temperature above 64° C, the melting point of the sample. The ampule containing trioxane is then sealed onto the Raman tube. This ampule is then also heated by nichrome wire, but to a temperature higher than the Raman tube. The sample then readily distills out of the ampule and fills the Raman tube as a liquid. Thus the sample is never allowed to form as a solid within the tube. If at any time the heat is turned off and the sample solidifies, the whole pro-

cedure must be repeated because of polymerization.

The spectrum was obtained with the aid of a three-prism glass spectrograph of linear dispersion 15 A/mm at 4358 A. This instrument and the irradiation apparatus used, as well as the developing, enlarging, and measuring procedures, have been described previously by others.[5-7] Exposure times of the spectra obtained ranged from one to forty hours.

Several attempts were made to obtain polarization data of trioxane in the liquid state. During the polarization exposures it was necessary to keep air from flowing past the Raman tube to prevent polymerization at the window. As a result the Raman tube became hotter than the ampule, and the sample distilled back. The ampule was insulated to raise its temperature and thus keep the sample in the Raman tube. However, the vapor pressure became too high and the tube exploded. The attempt to obtain polarization data was then abandoned.

Crystal. The Raman spectrum of trioxane in the form of a crystal aggregate was obtained with an irradiation apparatus designed for crystal powders.[8] To obtain a more complete spectrum an attempt was made to grow a single crystal. This was accomplished as follows: A small amount of sample was placed in an 8 mm Raman tube which was then

---

[5]R. L. Hudson, "Vibrational Spectra of Some Fluorinated Aromatics" (Unpublished Ph. D. dissertation, Dept. of Physics, University of Oklahoma, 1949).

[6]D.C. Smith, J.R. Nielsen, & H.H. Claassen, J. Chem. Phys. 18, 326 (1950).

[7]J. A. Jackson, Jr., "Vibrational Spectra of Lead Alkyls" (Unpublished Ph.D. dissertation, Dept. of Physics, University of Okla, 1955).

[8]J. Rud Nielsen, Spectroscopic Properties of Fluorocarbons and Fluorinated Hydrocarbons, Third Progress Report on Work Under Contract

evacuated. The sample was collected at the end away from the Raman window, and the tube was then driven, window first, through a small brass oven having a temperature of 50° C. Trioxane sublimed quickly onto the relatively cool window, and the crystal formed there continued to grow as the tube emerged from the oven. The rate at which the tube is withdrawn and consequently the rate of crystal growth was kept constant at 1 mm/hr. by a small electric motor but did not seem to be very critical. In this manner a single crystal approximately 3 cm in length was formed, and the Raman spectrum was obtained with the irradiation apparatus for the solid state previously mentioned. The longest exposure was thirty hours.

Infrared Spectrum

The infrared spectrum of trioxane vapor was obtained at 20° C with the aid of a one meter cell with KRS-5 windows and a Perkin-Elmer Model 112 double-pass spectrometer equipped with Cs Br, Na Cl, and Li F prisms.

Results

Reproductions of the Raman spectrum of trioxane in the liquid and crystalline states are shown in Figure 15. The observed Raman shifts are listed in Table VII. Under the columns labeled "Description", the relative intensities are indicated roughly by the abbreviations: s strong, vs very strong, m medium, w weak, etc. The general appearance of the bands is indicated by the notations: sh sharp, b broad, and d diffuse.

The observed infrared spectrum of the vapor between 3 and 26 μ is reproduced in Figures 16, 17, and 18. A complete percent transmission

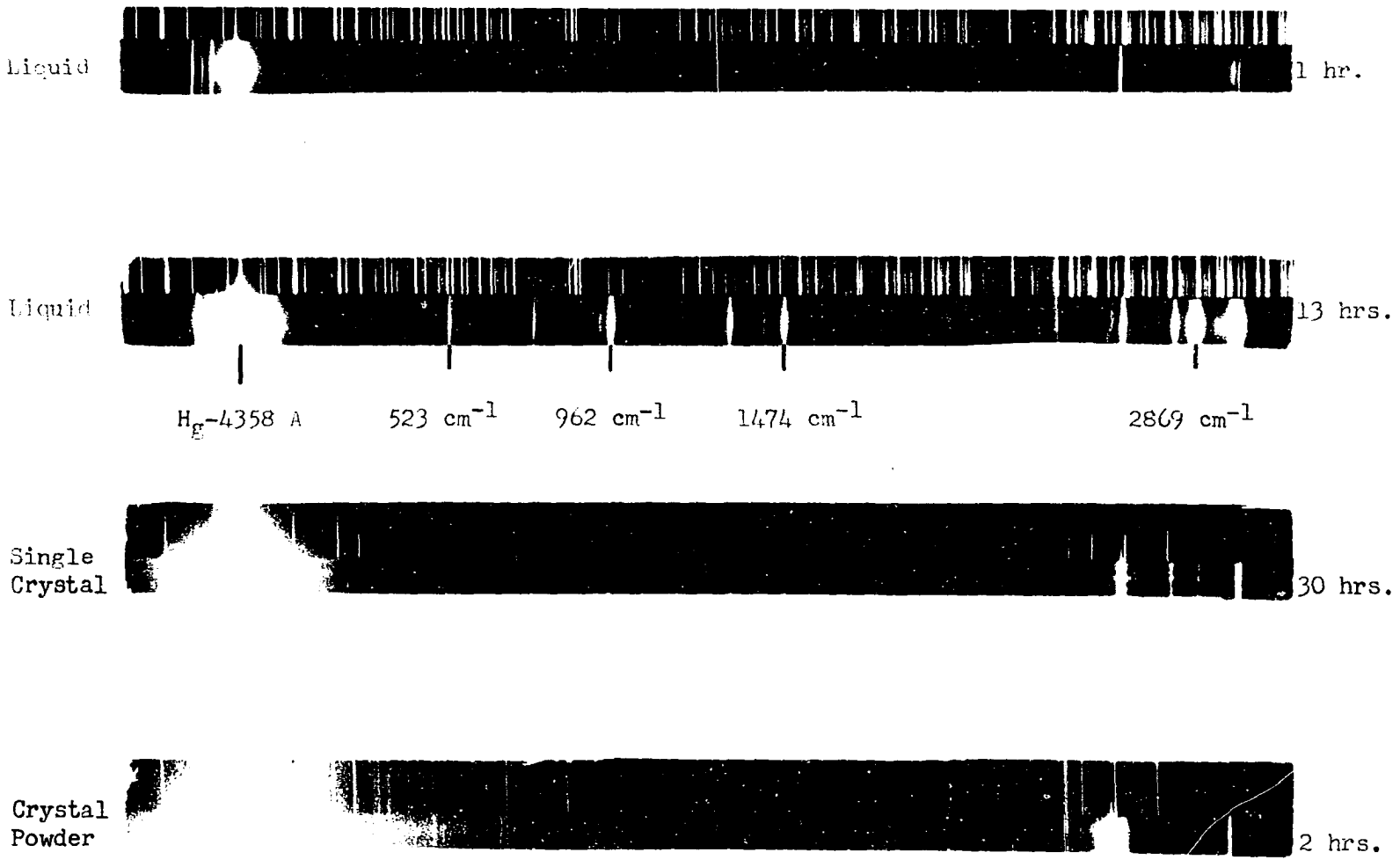

Figure 15

Raman Spectra of Liquid and Crystalline Tricosane

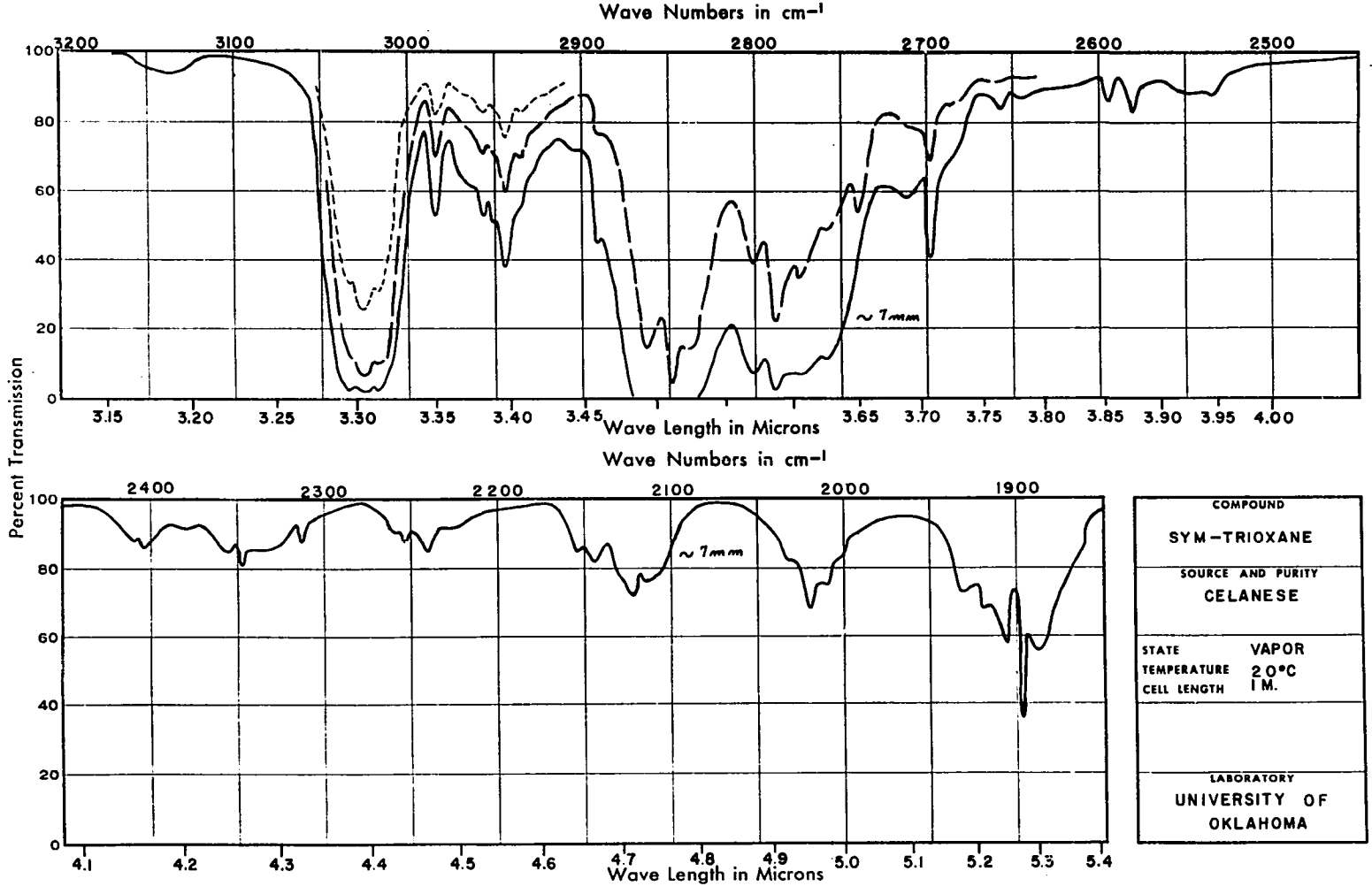

Figure 16

Infrared Spectrum of Trioxane, Li F Region

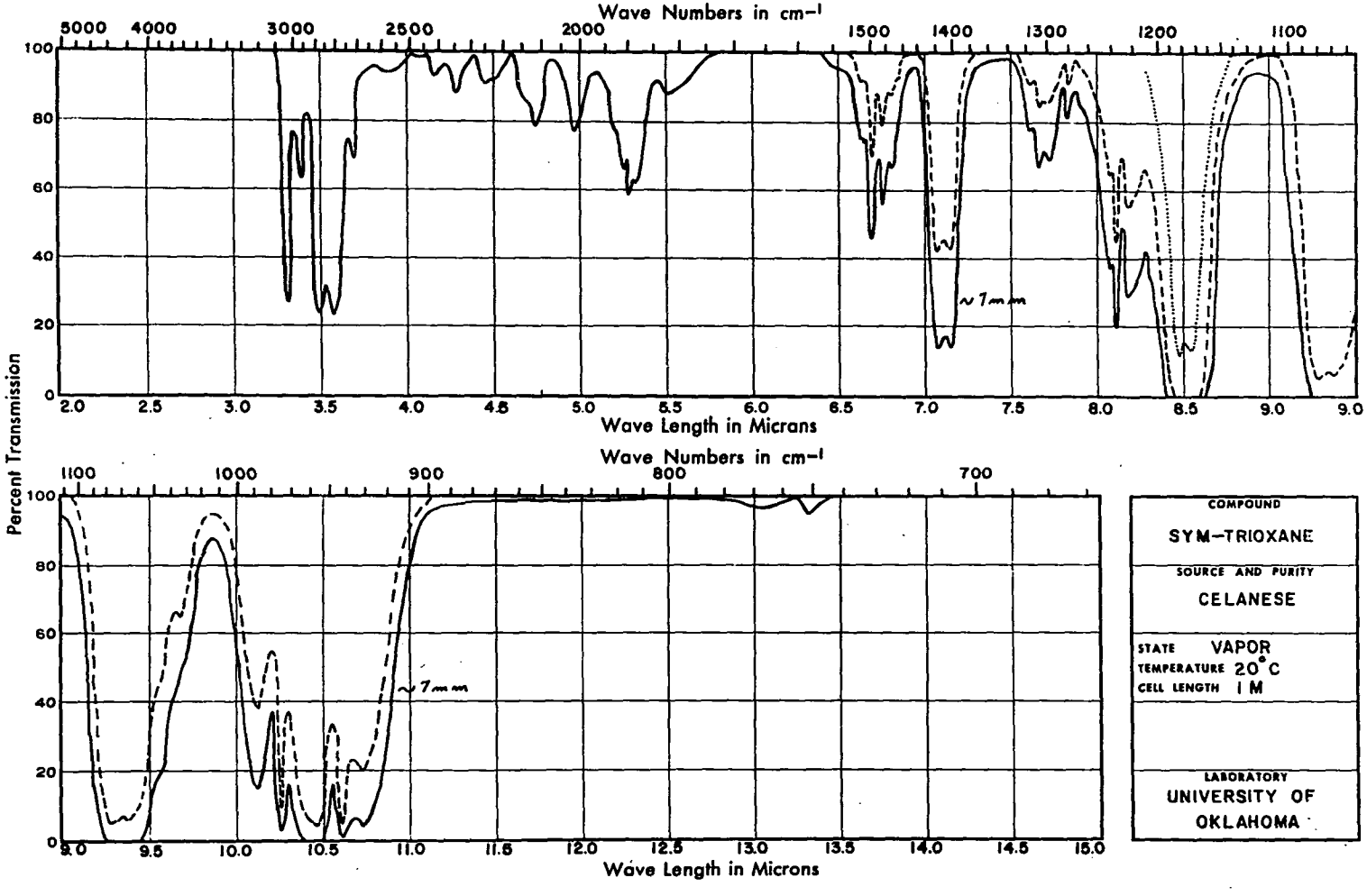

Figure 17

Infrared Spectrum of Trioxane, NaCl Region

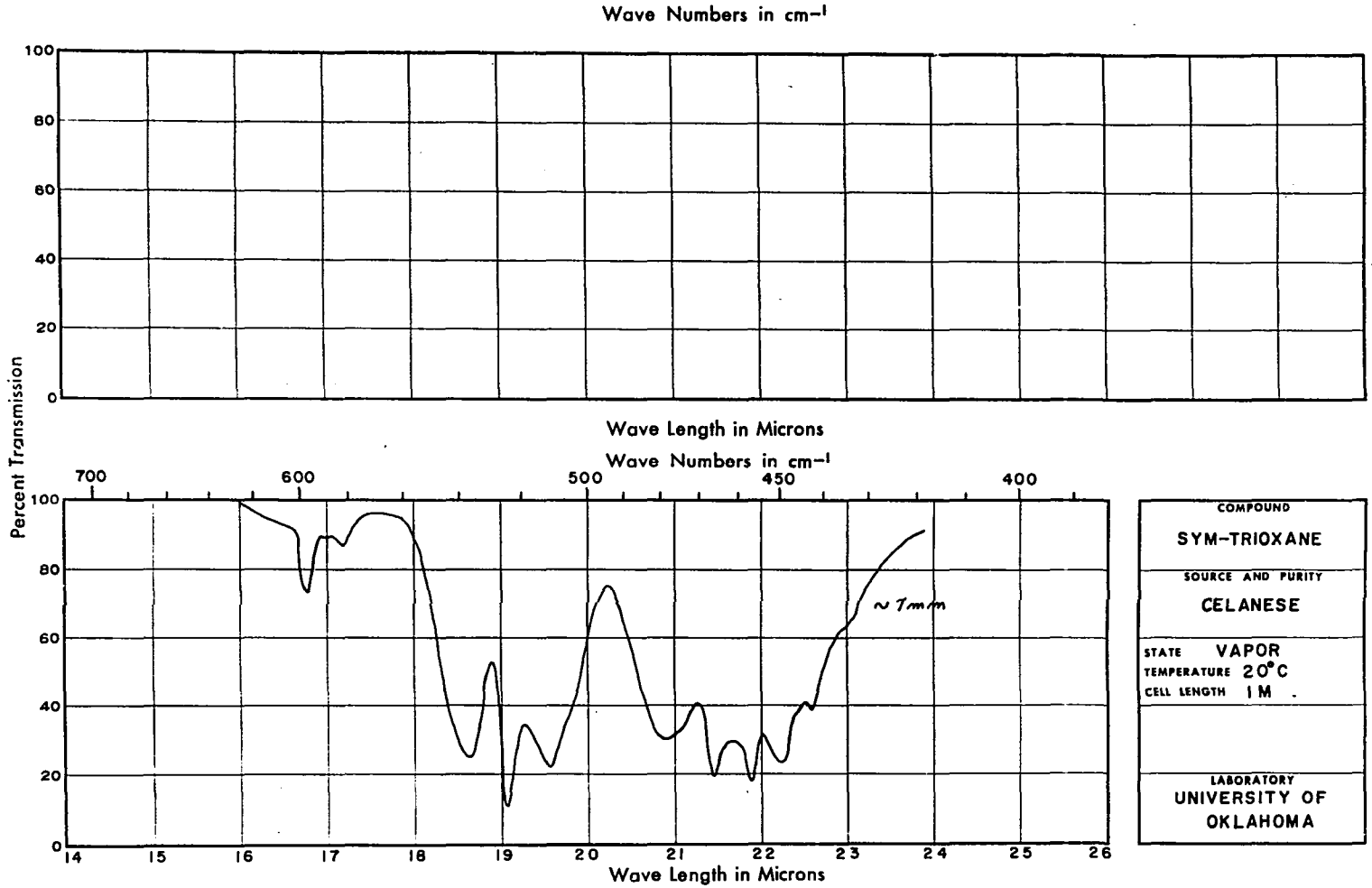

Figure 18

Infrared Spectrum of Trioxane, Cs Br Region

curve is given for a pressure of about 7 mm and partial transmittance curves are given for lower pressures. The absorption maxima of the spectrum of the gas along with those of the liquid observed by N.R.L.[9] are listed in Table VIII. In the third column the symbols ∥ and ⊥ are used to represent the contour of those vibrations which cause a change of electric moment parallel and perpendicular, respectively, to the symmetry axis of the molecule.

Interpretation

Studies of the crystal structure[10] and dipole moment[11] of trioxane show that the molecule exists in a puckered hexagonal ring or chair-structure, the C-O bond length being 1.42 ± .03A and the two bond angles of the ring both being 105° ± 10°. If the molecule has this structure it belongs to the point group C_{3v}, and the normal vibrations divide themselves as follows: $7a_1 + 3a_2 + 10e$. Vibrations of species a_1 will give rise to polarized Raman lines and parallel type bands in the infrared spectrum of the gaseous phase. Bands of species e will be depolarized and have perpendicular type contours. Bands of species a_2 will be inactive in both the Raman and the infrared spectra.

The molecule is a prolate symmetrical top. If all of the bond angles are assumed to be tetrahedral and the C-H bond distance is taken

---

No. AT-(40-1)-1074 with the U. S. Atomic Energy Commission Division of Research (Norman, Oklahoma, 1953).

[9]American Petroleum Research Institute Project 44, National Bureau of Standards, N. R. L., Washington, D. C., Serial nos. 830, 831 and 832 (1949).

[10]N. F. Moermann, Rec. Trav. Chim. 56, 161 (1937).

[11]A.A. Maryott & S.F. Acree, J. Res. Nat. Bur. Stand. 33, 71 (1944).

as 1.09 A, the principal moments of inertia are found to be $I_A = I_B \cong 160 \times 10^{-40}$ g cm^2 and $I_c \cong 287 \times 10^{-40}$ g cm^2. A rough idea of the contours of the parallel and perpendicular bands can be obtained from the theory of band envelopes for symmetric tops.[12, 13] Gerhard and Dennison's[14] parameters, $\beta = I_A/I_c - 1$ and S (β) have the approximate values - 0.4 and 1.49, respectively. Substitution into the formula given by them for the doublet separation for the P and R branches of parallel type bands yields the value $\Delta\nu = 25$ cm^{-1}, in excellent agreement with observation. Gerhard and Dennison have plotted the envelopes of perpendicular type bands only for $\beta = -1/2, -1/3, 1/2, 1$, and 4, but interpolation for $\beta = -1/2.5$ gives a corresponding PR separation of about 15 cm^{-1}. Comparison of relative absorption of the PQR branches in this interpolation with the relative intensity curves for parallel type bands plotted by Teller[15] show that the Q branch should be much more prominent in the parallel bands than in the perpendicular bands.

Ring Fundamentals

The approximate forms of the fundamental ring vibrations are illustrated in Figure 19.

The lowest a_1 fundamental, ν_7, which may be designated as a chair deformation or out-of-plane bending, is identified with the parallel

---

[12] S. L. Gerhard and D. M. Dennison, Phys. Rev. 43, 197 (1933).

[13] E. Teller, Hand-u. Jahrb. d. chem. Phys. 9, II, 43 (1934).

[14] S. L. Gerhard and D. M. Dennison, Phys. Rev. 43, 197 (1933).

[15] E. Teller, Hand-u. Jahrb. d. chem. Phys. 9, II, 43 (1934).

NORMAL RING VIBRATIONS OF TRIOXANE

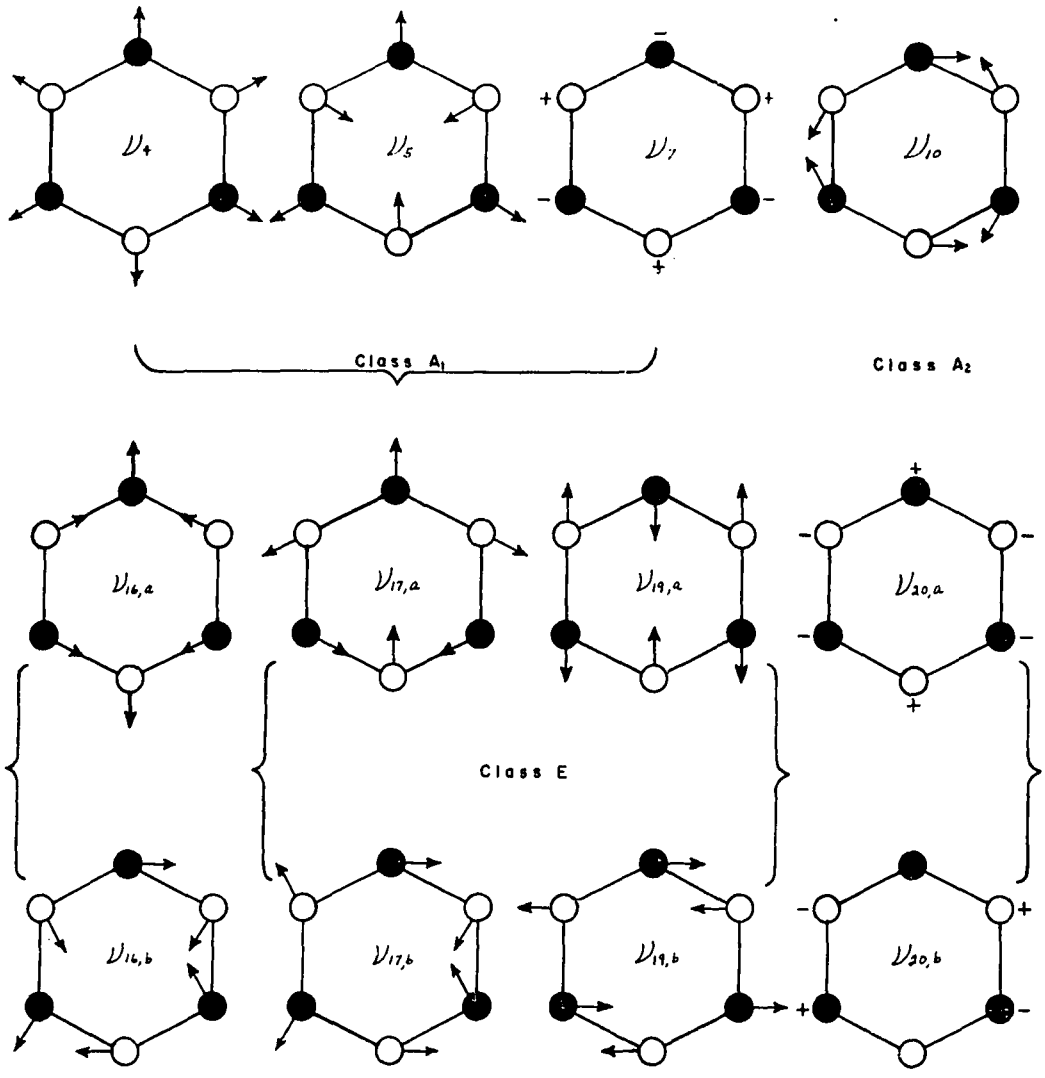

The two components of a degenerate vibration are bracketed together

Figure 19

type infrared band and the strong and sharp Raman band at 523 cm^{-1}. The other two a_1 fundamentals involving mainly ring vibrations are undoubtedly represented by the two very strong parallel type infrared bands at 935 and 970 cm^{-1} in gaseous trioxane and the Raman bands at 931 and 962 cm^{-1} in liquid trioxane. Comparison with similar ring vibrations of cyclohexane[16] and dioxane,[17] where selection rules are much more helpful, aids in the assignment. A totally symmetric ring breathing vibration, corresponding to ν_4 in Figure 19, is observed in these molecules as strong polarized Raman bands at 802 and 835 cm^{-1}, respectively. A fundamental corresponding to the other vibration, ν_7, which may be characterized as a ring deformation or in-plane bending, is observed at 740 cm^{-1} in dioxane. Consequently, the very strong Raman frequency 962 cm^{-1} must be associated with the ring breathing vibration, and the weaker Raman band at 931 cm^{-1} is assigned as ν_7.

The degenerate e fundamental designated by ν_{20} in Figure 19 has not been observed previously but has been calculated to lie near 200 cm^{-1}.[18] A weak and diffuse Raman band was observed at 307 cm^{-1} in the present investigation. No counterpart was observed in the infrared spectrum. In crystalline trioxane this band splits into two components, 306 and 312 cm^{-1}. Since no lower Raman frequency was observed even with long exposures, this Raman band is interpreted as the lowest e fundamental, ν_{20}. Although the contour of the band at $\sim$460 cm^{-1} in the

---

[16]A. Langseth and B. Bak, J. Chem. Phys. 8, 403 (1940).

[17]D. A. Ramsay, Proc. Roy. Soc. A, 190, 562 (1947).

[18]B. D. Saksena and P. S. Raizada, Proc. Ind. Acad. Sci. 36, 267 (1952).

infrared spectrum of the gas is uncertain, the weak broad appearance of the corresponding Raman band at 472 cm^{-1} indicates that it is also an e fundamental. This assignment is supported by the fact that in cyclohexane a fundamental corresponding to ν_{19} is found at 426 cm^{-1}, and that a corresponding vibration in dioxane splits into two bands, found at 430 and 485 cm^{-1}. The two broad Raman bands at 1070 and 1163 cm^{-1} both have quite strong perpendicular counterparts in the infrared. They are assigned as the degenerate C-O stretching frequencies, ν_{17} and ν_{16}, respectively. Comparison with dioxane supports these assignments. The C-O stretching frequency in dioxane similar to ν_{17} is found at 1020 cm^{-1}, and those corresponding to ν_{16} at 1111 and 1125 cm^{-1}.

This completes the assignment of the fundamentals associated with vibrations of the ring, except for the inactive a_2 fundamental labeled ν_{10} in Figure 19. It is an in-plane bending or ring deformation, and the corresponding fundamental in dioxane is found at 1136 cm^{-1}. In the spectra of the vapor ν_{16} and ν_{17} increase by approximately 50 cm^{-1} in going from dioxane to trioxane. If an increase of the same order is assumed for ν_{10}, it should lie near 1185 cm^{-1}.

C-H Fundamentals

There are four active C-H stretching fundamentals, two of species a_1 and two of species e. Kahovec and Kohlrausch[19] observed only two Raman bands between 2700 and 3100 cm^{-1}. Ramsay[20] and Decius, Steele

[19]L. Kahovec and K. W. F. Kohlrausch, Z. physik. Chem. B35, 29 (1937).

[20]D. A. Ramsay, Trans. Far. Soc. 44, 289 (1948).

and Snyder[21] have observed just four bands in this region in the infrared spectrum and have assigned them as the four expected fundamentals. In the present work six bands are found in this region in the Raman spectrum. The corresponding bands are also observed in the infrared, as well as some weaker ones that are easily explained as binary combinations of lower fundamentals. One of the new Raman bands, 2704 cm^{-1}, which is the weakest one of the six, is easily explained as a combination of 1308 and 1411 cm^{-1}. The new infrared band at 2753 cm^{-1} in gaseous trioxane corresponds to the Raman frequency 2742 cm^{-1} in the liquid. It is overlapped in the infrared by a strong band at 2792 cm^{-1} which accounts for its not being observed previously. The better resolution in the infrared spectrum attained in the present work shows that the band at 2950 cm^{-1}, previously assigned as an e fundamental,[22] definitely has parallel type contour and is not as strong as the new band at 2753 cm^{-1}. The latter, having a 18 cm^{-1} separation of rotational maxima, seems to be a perpendicular band. It is fairly strong in the Raman effect. These facts lead to the assignment of 2742 cm^{-1} as an e fundamental and 2950 cm^{-1} as the overtone of 1474 cm^{-1}. The two strong parallel infrared bands at 2792 and 2853 cm^{-1} are then assigned as the two a_1 fundamentals associated with C-H stretching. The P and R rotational branches of the intense band at 3031 cm^{-1} have a separation of 17 cm^{-1} which indicates that is a parallel band. It is therefore assigned as the remaining e fundamental in this region. According to these assignments the C-H stretching frequencies

[21] J. C. Decius, W. C. Steele, and R. G. Snyder, J. Chem. Phys. 19, 806 (1951).

[22] Ibid.

cover a range of nearly 300 cm^{-1} which seems very large in consideration of the similarity of the vibrations. However, there is undoubtedly quite a bit of mixing between fundamentals, combination bands, and overtones, and the assignments have only very rough meaning.

Decius et al. have pointed out that the six C-H bonds separate into two sets of three; the bonds of one set, labeled s_1, s_2, and s_3, are very nearly parallel to the molecular symmetry axis and the bonds of the other set, labeled t_1, t_2, and t_3, are inclined approximately 109° to the symmetry axis. These authors use the following symmetry coordinates: $s_{A_1} = 3^{-\frac{1}{2}} (s_1 + s_2 + s_3)$ and $t_{A_1} = 3^{-\frac{1}{2}} (t_1 + t_2 + t_3)$ of species a_1, and $s_E = 6^{-\frac{1}{2}} (2s_1 - s_2 - s_3)$ and $t_E = 6^{-\frac{1}{2}} (2t_1 - t_2 - t_3)$ of species e, and make the assumption that coupling within a species is small. Then by assuming that the intensities of fundamentals are proportional to the total vector sum of the dipole moment, they predict the rough intensity ratios $s_{A_1}/t_{A_1} = 3$ and $s_E/t_E = 0$. These results are still in qualitative agreement with the present assignments.

Using the same notation, an alternative set of assumptions about the normal C-H stretching vibrations is the following: $\nu_2 = s_{A_1} + t_{A_1}$ and $\nu_1 = s_{A_1} - t_{A_1}$ for species a_1, and $\nu_{12} = s_E + t_E$ and $\nu_{11} = s_E - t_E$ for species e. Thus, ν_1 and ν_{12} represent vibrations in which the two C-H bonds of a methyl group stretch in phase and may be expected to lie lower than ν_1 and ν_{11} which represent motions in which the two C-H bonds of a methyl group stretch 180° out of phase. The four C-H stretching frequencies are assigned as follows: 3031 cm^{-1} ν_{11}, 2853 cm^{-1} ν_1, 2792 cm^{-1} ν_2, and 2753 cm^{-1} ν_{12}.

If the assumption of Decius et al. that the intensities of fundamentals should be approximately proportional to the total dipole moment is used, the intensity ratios $\nu_1/\nu_2 = 2$ and $\nu_{11}/\nu_{12} = 1$ are predicted. These are also in qualitative agreement; although, the intensity of ν_{11} is actually greater than that of ν_{12}. Of course, the intensities of these fundamentals are undoubtedly affected, possibly strongly, by resonance with overtones and combination bands in this region. The actual linear combination of the symmetry coordinates of a species required to form a normal coordinate is probably somewhere between the approximations mentioned here and those made by Decius.

Two methylene deformation fundamentals of species a_1 and e are expected in the region around 1450 cm^{-1}. The parallel infrared band at 1496 cm^{-1} is undoubtedly the a_1 fundamental. This band is rather weak in the Raman spectrum and furthermore is nearly obscured by the strong diffuse Raman band at 1474 cm^{-1} which is assigned as the e fundamental associated with CH_2 deformation. These assignments are supported by previous assignments for ethylene oxide,[23] in which the symmetric CH_2 deformation is found at 1490 cm^{-1} and the other at 1470 cm^{-1}.

The two e fundamentals associated with CH_2 wagging and twisting are identified with the two perpendicular infrared bands at 1407 and 1300 cm^{-1}. There is undoubtedly a large amount of mixing of the two kinds of motion, but 1407 cm^{-1} is assumed to involve principally wagging and 1300 cm^{-1}, which splits in the crystal, largely twisting.

The remaining two fundamentals of species a_1 and e may be

---

[23] R. C. Lord and B. Nolin, J. Chem. Phys. 24, 656 (1956).

ascribed largely to methylene rocking. The strong and sharp Raman band at 748 cm^{-1} is undoubtedly the a_1 fundamental in question. The Raman band at 1050 cm^{-1} must then be the e fundamental. In the infrared spectrum of gaseous trioxane this band is overlapped by a strong band at 1072 cm^{-1}, but the separation of the two observed maxima is 17 cm^{-1} indicating that it is a perpendicular band. This frequency for the CH_2 rocking e fundamental is also in good agreement with the value 1055 cm^{-1} for a corresponding fundamental in dioxane.[24]

Discussion

The infrared and Raman bands observed and interpreted here as fundamentals for sym-trioxane are listed in Table IX. Rough estimates of the wave numbers of the inactive a_2 fundamentals are given in Table X. The characterization of the vibrations given in column three has only very rough meaning.

Polarization measurements would have helped to confirm the assignments, but in most cases the band contours of the vapor is sufficient information. The assignments made here differ for more than half of the fundamentals from those made by previous investigators.[25, 26] Moreover, the ring frequencies assigned here do not agree well with those calculated for trioxane by Saksena and Raizada.[27] However, because of

---

[24]D. A. Ramsay, Proc. Roy. Soc. A, 190, 562 (1947).

[25]L. Kahovec and K. W. F. Kohlrausch, Z. physik. Chem. B35, 29 (1937).

[26]D. A. Ramsay, Trans. Far. Soc. 44, 289 (1948).

[27]B. D. Saksena and P. S. Raizada, Proc. Ind. Acad. Sci. 36, 267 (1952).

the more complete Raman data and greater resolution in the infrared spectra obtained in the present investigation, it is believed that the present assignments are more nearly correct. It has been possible to give a satisfactory interpretation of all of the observed Raman and infrared bands not interpreted as fundamentals as either overtones or binary combinations of the fundamentals listed in Table IX. While this supports the assignments made, it may be regarded as unfortunate in that the combination bands and overtones observed do not aid in determining the a_2 fundamentals.

Crystal

The X-ray studies of Moermann[28] on trioxane give not only the molecular point group C_{3v} but also the space group C_{3v}^6 for the crystal. Methods of deriving normal vibrations and selection rules for crystals have been developed by Bhagavantam and Venkatarayudu,[29] Halford,[30] Hornig,[31] and Winston and Halford.[32] As can be seen in Figure 15, there is no striking difference between the Raman spectra of liquid and crystalline trioxane. Hence, only a general discussion will be given of the spectrum of the crystal.

As expected, in going from the liquid to the crystal, the Raman

---

[28]N. F. Moermann, Rec. Trav. Chim. 56, 161 (1937).

[29]S. Bhagavantam and T. Venkatarayudu, Proc. Ind. Acad. Sci. 9A, 224 (1939); S. Bhagavantam, ibid., 13A, 543 (1941).

[30]R. S. Halford, J. Chem. Phys. 14, 8 (1946).

[31]D. F. Hornig, J. Chem. Phys. 16, 1063 (1948).

[32]H. Winston and R. S. Halford, J. Chem. Phys. 17, 607 (1949).

bands in general are sharper, and there are some small shifts in frequency. The greatest changes occur in the three bands at 307, 962 and 1308 cm^{-1}. The Raman band at 962 cm^{-1} ascribed to ring breathing becomes very broad, while 307 and 1308 cm^{-1} split into two components at 306, 312 cm^{-1} and 1314, 1319 cm^{-1} respectively. This splitting of the degenerate frequencies in the crystal can be explained by the presence of two molecules in the unit cell, defined as the smallest unit in which no atoms are equivalent under simple translations. In trioxane one molecule of the unit cell is immediately below the other along the hexagonal axis but rotated by 60°. The unit cell group of the space group is isomorphic to the point group C_{3v}. Since the site group, a point subgroup of the unit cell group whose elements leave the center of mass of the molecule invariant, is the same as the unit cell group in this case, the degeneracy is as follows: for each a_1 (or a_2) vibration of the individual molecule there are two normal vibrations of species a_1, (or a_2), one in which the two molecules vibrate in phase and one in which they vibrate 180° out of phase. Likewise, for each e fundamental of the individual molecule there are two e fundamentals in the crystal. This is probably the explanation of the splitting observed and the broadening of the band at 959 cm^{-1} in the spectrum of the crystal.

Another possible explanation of the splitting of the two e fundamentals is given by a simple theory suggested by Halford.[33] This method makes use of the site group, sometimes referred to as the local symmetry group since it gives the local symmetry of a point. The mole-

[33]R. S. Halford, J. Chem. Phys. 14, 8 (1946).

cule is assumed to have the symmetry of the site group, and the selection rules for the normal vibrations are derived. Hornig has listed some of these site groups and the symmetry types of vibrational mode that may be split by anharmonic interactions with the crystal lattice vibrations.[34] The degenerate e species of the site group C_{3v} is included in this list. Since this is an effect of higher order due to anharmonic interactions, it is expected in general to be smaller than the effect of the degeneracy introduced by the presence of more than one molecule in the unit cell. The latter must be the explanation for the broadening of the a_1 fundamental since it cannot be explained by the site group method.

[34] D. F. Hornig, J. Chem. Phys. 16, 1063 (1948). See Table III, p. 1075.

Table VII

Raman Spectrum of Trioxane

Liquid		Crystal		
Wave Number	Description	Wave Number	Description	Interpretation
307	w, d	306 312	vw vw	e fundamental
472	w, b	484	vw	e fundamental
523 612	s, sh vvw	520	s, sh	a_1 fundamental 2 X 307 = 614 ($A_1 \nearrow E$)
748	s, sh	747	m, sh	a_1 fundamental
931	m, b	927	m, sh	a_1 fundamental
962	vs, b	959	s, b	a_1 fundamental
1051	w, b	1050	vw	e fundamental
1070	w, b	1072	vw	e fundamental
1163	w, b	1160	m, sh	e fundamental
1308	s	1314 1319	m, sh s, sh	e fundamental
1411	m	1418	m	e fundamental
1474 1493	s, d vw	1479	s	e fundamental a_1 fundamental
2704	vw	2715	vvw	1308 $\nearrow$ 1411 = 2719 ($A_1 \nearrow A_2 \nearrow E$)
2742	m	2758	vw	e fundamental
2794	s	2808	m	a_1 fundamental
2869	s	2887	s, b	a_1 fundamental
2950	vvw	2960	vvw, b	2 X 1474 = 2948 ($A_1 \nearrow E$)
3020	vs	3032	vs, sh	e fundamental

Table VIII

Infrared Spectrum of Trioxane

Gas			Liquid[a]		
Wave Number	Description	Band Type	Wave Number	Description	Interpretation[b]
435 442 449 457 466 478	vvw w m m m m		476	s, b	e fundamental
512 524 536	m s m	∥	524	s	a_1 fundamental
582 596	vvw vw	⊥	612	w	2 X [307]^c = 614 (A_1 ≠ E)
752	vvw		749	w	a_1 fundamental
769	vvw				307 ^{c} ≠ 462 = 769 (A_1 ≠ A_2 ≠ E)
932 943 956	s s s	∥	935	vs	a_1 fundamental
975 988	s m	∥	970	vs	a_1 fundamental
1033 1050	w w	⊥ ?	1050	s	e fundamental
1066 1078	s s	⊥	1068	vs	e fundamental
1170 1180	vs vs	⊥	1168	vs	e fundamental
1224 1234 1239	m m w	?	1229	s	462 ≠ 752 = 1224 (E) [307]^c ≠ 943 = 1250 (E)
1278	vw		1274	w	[307]^c ≠ 975 = 1282 (E)

Table VIII - (Continued)

Gas			Liquid[a]		
Wave Number	Description	Band Type	Wave Number	Description	Interpretation[b]
1296 1305 1316	w w vw	⊥	1309	s	e fundamental
1401 1414	m m	⊥	1412	s	e fundamental
			1453	w	$524 + 943 = 1467\ (A_1)$
1471 1482	vw w	⊥ ?	1477	m	e fundamental
1496 1506	m vw	∥	1497	m	a_1 fundamental
					$2 \times 752 = 1504\ (A_1)$ $462 + 1041 = 1503\ (A_1 + A_2 + E)$
1510	vvw				
			1634	vw	$462 + 1175 = 1637\ (A_1 + A_2 + E)$
			1680	vw	$752 + 943 = 1695\ (A_1)$
			1730	vvw	$752 + 975 = 1727\ (A_1)$
			1805	vvw	$[307]^c + 1497 = 1804\ (E)$
1818	vvw				$524 + 1300 = 1824\ (E)$ $752 + 1072 = 1824\ (E)$
1862	vvw				$462 + 1407 = 1869\ (A_1 + A_2 + E)$
1888 1898 1906	w m w	∥	1860 1905	m vw	$2 \times 943 = 1886\ (A_1)$
1920	vw				$943 + 975 = 1918\ (A_1)$
1934	vw				$524 + 1407 = 1931\ (E)$ $462 + 1477 = 1939\ (A_1 + A_2 + E)$
2002 2011 2021 2031	vvw vw w vw		1995	m	$943 + 1072 = 2015\ (E)$ $975 + 1041 = 2016\ (E)$ $524 + 1497 = 2021\ (A_1)$ $975 + 1072 = 2047\ (E)$

Table VIII - (Continued)

Gas			Liquid[a]		
Wave Number	Description	Band Type	Wave Number	Description	Interpretation[b]
2115	w		2090	m	1041 + 1072 = 2113 ($A_1 + A_2 + E$)
2123	w				943 + 1175 = 2118 (E)
2146	vw		2130	w	2 X 1072 = 2144 ($A_1 + E$)
					975 + 1175 = 2150 (E)
2155	vw				752 + 1407 = 2159 (E)
					752 + 1477 = 2229 (E)
2226	vvw		2240	w	943 + 1300 = 2243 (E)
2242	vw				1072 + 1175 = 2247 ($A_1 + A_2 + E$)
2256	vw				752 + 1497 = 2249 (A_1)
2261	vvw				975 + 1300 = 2275 (E)
2319	vw				
2334	vw		2325	w	1041 + 1300 = 2341 ($A_1 + A_2 + E$)
2352	vw	∥?			2 X 1175 = 2350 ($A_1 + E$)
2361	vw				1072 + 1300 = 2372 ($A_1 + A_2 + E$)
2387	vvvw				975 + 1407 = 2382 (E)
2407	vw		2385	w	943 + 1477 = 2420 (E)
2412	vvw				
			2470	vw	975 + 1497 = 2472 (A_1)
					1175 + 1300 = 2475 ($A_1 + A_2 + E$)
					1072 + 1407 = 2479 ($A_1 + A_2 + E$)
2537	vw				1072 + 1477 = 2549 ($A_1 + A_2 + E$)
2551	vvw		2550	vvw	1072 + 1497 = 2569 (E)
2583	vvw		2575	vvw	1175 + 1407 = 2582 ($A_1 + A_2 + E$)
2598	vvw		2605	vvw	2 X 1300 = 2600 ($A_1 + E$)
2648	vvw		2630	vvw	1175 + 1477 = 2652 ($A_1 + A_2 + E$)
2662	vvw				1175 + 1497 = 2672 (E)
2691	vw				
2702	w	∥			1300 + 1407 = 2707 ($A_1 + A_2 + E$)
2716	vw				

Table VIII - (Continued)

Gas			Liquid[a]		
Wave Number	Description	Band Type	Wave Number	Description	Interpretation[b]
2744 2762	m m	⊥ ?	2765	w	e fundamental
2779 2792 2806	m s m	∥	2793	m	a_1 fundamental $2 \times 1407 = 2814$ ($A_1 + E$)
2843 2853 2868	s vs s	∥	2869	m	a_1 fundamental
2895	w				$1407 + 1497 = 2904$ (E)
2940 2949 2955 2962	w m w w	∥	2950	w	$2 \times 1477 = 2954$ ($A_1 + E$)
2976 2989 ~3000	vw w vw	∥			$2 \times 1497 = 2994$ (A_1)
3023 3031 3040	s s s	⊥	3018	m	e fundamental
3142	vvw		3170	w	[307][c] + 2853 = 3160 (E)
			3260	vw	462 + 2792 = 3254 (E)
			3330	vw	[307][c] + 3031 = 338 ($A_1 + A_2 + E$)
			3610	vw	752 + 2853 = 3605 (A_1)
			3830	vw	1072 + 2753 = 3825 ($A_1 + A_2 + E$) 975 + 2853 = 3828 (A_1)
			3940	vw	1072 + 2853 = 3925 (E) 1175 + 2753 = 3928 ($A_1 + A_2 + E$) 1175 + 2792 = 3967 (E)
			4100	vvw	1300 + 2792 = 4092 (E) 1072 + 3031 = 4103 ($A_1 + A_2 + E$)

Table VIII - (Continued)

Gas			Liquid[a]		
Wave Number	Description	Band Type	Wave Number	Description	Interpretation[b]
					1407 + 2753 = 4160 ($A_1 + A_2 + E$)
			4180	w	1407 + 2792 = 4199 (E)
					1175 + 3031 = 4206 ($A_1 + A_2 + E$)
					1407 + 3031 = 4438 ($A_1 + A_2 + E$)
			4480	w	1477 + 3031 = 4508 ($A_1 + A_2 + E$)

[a]Observed by A.P.I. Research Project 44, Nat. Bur. Stand., N.R.L., Washington, D. C., Serial Nos. 830, 831 and 832.

[b]Values of the fundamentals used in the interpretation are the band centers from the infra-red spectrum of the gas.

[c]307 cm^{-1} is an e fundamental observed in the Raman spectrum but not in the infra-red.

Table IX

Active Fundamental Vibration Frequencies of Trioxane

Symmetry Species	Designation	Approximate Character	Infra-red				Raman			
			Gas		Liquid		Liquid		Crystal	
			Wave Number	Band Type	Wave Number	Description	Wave Number	Description	Wave Number	Description
a_1	ν_1	CH stretching	2853	∥	2869	m	2869	s	2887	s, b
a_1	ν_2	CH stretching	2792	∥	2793	m	2794	s	2808	m
a_1	ν_3	CH_2 deformation	1496	∥	1497	m	1493	vw		
a_1	ν_4	Ring breathing	975	∥	970	vs	962	vs, b	959	s, b
a_1	ν_5	Ring deformation	943	∥	935	vs	931	m, b	927	m, sh
a_1	ν_6	CH_2 rocking	752	∥	749	w	748	s, sh	747	m, sh
a_1	ν_7	Chain deformation	524	∥	525	s	523	s, sh	520	s, sh
e	ν_{11}	CH stretching	3031	⊥	3018	m	3020	vs	3032	vs, sh
e	ν_{12}	CH stretching	2753	⊥?	2765	w	2742	m	2758	vw
e	ν_{13}	CH_2 deformation	1477	⊥?	1477	m	1474	s, d	1479	s
e	ν_{14}	CH_2 wagging	1407	⊥	1412	s	1411	m	1418	m

Table IX - (Continued)

Symmetry Species	Designation	Approximate Character	Infra-red Gas Wave Number	Infra-red Gas Band Type	Infra-red Liquid Wave Number	Infra-red Liquid Description	Raman Liquid Wave Number	Raman Liquid Description	Raman Crystal Wave Number	Raman Crystal Description
e	ν_{15}	CH_2 twisting	1300	⊥	1309	s	1308	s	1319 1314	m, sh s, sh
e	ν_{16}	C-O stretching	1175	⊥	1168	vs	1163	w, b	1160	m, sh
e	ν_{17}	C-O stretching	1072	⊥	1068	vs	1070	w, b	1072	vw
e	ν_{18}	CH_2 rocking	1041	⊥?	1050	s	1051	w, b	1050	vw
e	ν_{19}	Ring deformation	462		476	s, b	472	w, b	484	vw
e	ν_{20}	Chain deformation					307	w, d	312 306	vw vw

Table X

Inactive Fundamental Vibration Frequencies of Trioxane

Symmetry Species	Designation	Approximate Character	Estimated Wave Number
a_2	ν_8	CH_2 wagging	1350
a_2	ν_9	CH_2 twisting	1250
a_2	ν_{10}	Ring deformation or in-plane bending	1185

BIBLIOGRAPHY

American Petroleum Research Institute Project 44, National Bureau of Standards, N.R.L., Wash., D. C., Serial nos. 830, 831, and 832 (1949).

Ananthakrishnan, R., Proc. Ind. Acad. Sci. 5A, 285 (1937).

Atoji, M., and Lipscomb, W. N., Acta Cryst. 6, 770 (1953).

Bauer, E., and Magat, M., Physica 5, 718 (1938).

Bhagavantam, S., and Venkatarayudu, T., Proc. Ind. Acad. Sci. 9A, 224 (1939).

Bhagavantam, S., Proc. Ind. Acad. Sci. 13A, 543 (1941).

Braune, H., and Knoke, S., Z. physik. Chem. B21, 297 (1933).

Brockway, L. O., and Pauling, L., Proc. Nat. Acad. Sci. U.S. 19, 68 (1933).

Bunn, C. W., Trans. Far. Soc. 40, 23 (1940).

Carter, G. F., and Templeton, D. H., Acta Cryst. 6, 805 (1953).

Claassen, H. H., "Vibrational Spectra of Some Fluorinated Hydrocarbons" (Unpublished Ph. D. dissertation, Dept. of Physics, University of Oklahoma, 1949).

Coblentz, W. W., Investigations of Infrared Spectra (Carnegie Institute of Washington, 1905), Part I.

Crawford, B. L., Jr., and Joyce, L., J. Chem. Phys. 7, 307 (1939).

Dadieu, A., and Kohlrausch, K. W. F., Monatsh. f. Chemie 57, 225 (1931).

Decius, J. C., Steel, W.C., and Snyder, R.G., J. Chem. Phys. 19, 806 (1951).

DeLattre, A., J. Chem. Phys. 20, 520 (1952).

Edelson, D., and McAfee, K. B., J. Chem. Phys. 19, 1311 (1951).

Edsall, J. T., and Wilson, E. B., J. Chem. Phys. 6, 124 (1938).

Eucken, A., and Ahrens, H., Z. physik. Chem. B26, 297 (1934).

Gaunt, J., Trans. Far. Soc. 49, 1122 (1953).

Gullikson, C. W., "Vibrational Spectra of Compounds in the Gaseous State" (Unpublished paper, Dept. of Physics, University of Oklahoma).

Gunthard, Messikommer, and Kohler, Helv. Chim. Acta 33, 1809 (1950).

Hadni, A., C. R. Acad. Sci. 239, 349 (1954).

Halford, R. S., J. Chem. Phys. 14, 8 (1946).

Herzberg, F., Infrared and Raman Spectra (D. Van Nostrand Company, Inc. New York, 1945).

Hornig, D. F., J. Chem. Phys. 16, 1063 (1948).

Hudson, R. L., "Vibrational Spectra of Some Fluorinated Aromatics" (Unpublished Ph. D. dissertation, Dept. of Physics, University of Oklahoma, 1949).

Jackson, J. A., Jr., "Vibrational Spectra of Lead Alkyls" (Unpublished Ph. D. dissertation, Dept. of Physics, University of Oklahoma, 1955).

Kahovec, L., and Kohlrausch, K. W. F., Z. physik. Chem. B35, 29 (1951).

Keesom, W. H., and Taconis, K. W., Physica 2, 463 (1935).

Kemp, J. W., Jones, J. L., and Durkee, R. W., J. Opt. Soc. Am. 42, 811 (1952).

Kirkwood, J. G., quoted by W. West and R. E. Edwards, J. Chem. Phys. 5, 14 (1937).

Kistiakowsky, G. B., and Rice, W. W., J. Chem. Phys. 8, 610 (1940).

Kohlrausch, K. W. F., Monatsh. f. Chemie 68, 349 (1936).

Kohlrausch, K. W. F., Hand-u. Jahrb. d. chem. Phys. B9, VI, 164 (1943).

Lagemann, R. T., and Jones, E. A., J. Chem. Phys. 19, 534 (1951).

Langseth, A., and Bak, B., J. Chem. Phys. 8, 403 (1940).

Lord, R. C., and Nolin, B., J. Chem. Phys. 24, 656 (1956).

Maryott, A. A., and Acree, S. F., J. Res. Nat. Bur. Stand. 33, 71 (1944).

Matossi, F., Ergeb. exakt. Naturwiss. 8, 109 (1938).

Moermann, N. F., Rec. Trav. Chim. 56, 161 (1937).

Nielsen, J. R., Spectroscopic Properties of Fluorocarbons and Fluorinated Hydrocarbons, Third Progress Report on Work Under Contract No. AT- (40-1) - 1074 with the Atomic Energy Commission Division of Research (Norman, Oklahoma, 1953).

Pitzer, K. S., J. Chem. Phys. 10, 605 (1942).

Placzeck, Z., and Teller, E., Z. Physik. 81, 209 (1953).

Ramsay, D. A., Trans. Far. Soc. 44, 289 (1948).

Ramsay, D. A., Proc. Ray, Soc. A, 190, 562 (1947).

Saksena, B. D., and Raizada, P. S., Proc. Ind. Acad. Sci. 36, 267 (1952).

Sirkar, S. C., Ind. J. Phys. 7, 257 (1932).

Smith, D. C., Brown, G. M., Nielsen, J. R., Smith, R. M., Liang, C. Y., J. Chem. Phys. 20, 473 (1952).

Smith, D. C. Nielsen, J. R., and Claassen, H. H., J. Chem. Phys. 18, 326 (1950).

Taconis, K. W., Diss. Leiden (1938).

Teller, E., Hand-u. Jahrb. d. chem. Phys. 9, II, 43 (1934).

Thompson, H. W., and Cave, W. T., Trans. Far. Soc. 47, 946 (1951).

Weiler, J., Anal. Phys. 23, 493 (1935).

Welsh, H. L., Cumming, C., and Stansbury, E. G., J. Opt. Soc. Am. 41, 712 (1951).

Winston, H., and Halford, R. S., J. Chem. Phys. 17, 607 (1949).

Wolkenstein, M., and Syrkin, Ya. K., Nature 139, 288 (1937).

Yost, D. M., Steffens, C. C., and Gross, S. T., J. Chem. Phys. 2, 311 (1934).