INFORMATION TO USERS

This reproduction was made from a copy of a document sent to us for microfilming. While the most advanced technology has been used to photograph and reproduce this document, the quality of the reproduction is heavily dependent upon the quality of the material submitted.

The following explanation of techniques is provided to help clarify markings or notations which may appear on this reproduction.

1. The sign or "target" for pages apparently lacking from the document photographed is "Missing Page(s)". If it was possible to obtain the missing page(s) or section, they are spliced into the film along with adjacent pages. This may have necessitated cutting through an image and duplicating adjacent pages to assure complete continuity.

2. When an image on the film is obliterated with a round black mark, it is an indication of either blurred copy because of movement during exposure, duplicate copy, or copyrighted materials that should not have been filmed. For blurred pages, a good image of the page can be found in the adjacent frame. If copyrighted materials were deleted, a target note will appear listing the pages in the adjacent frame.

3. When a map, drawing or chart, etc., is part of the material being photographed, a definite method of "sectioning" the material has been followed. It is customary to begin filming at the upper left hand corner of a large sheet and to continue from left to right in equal sections with small overlaps. If necessary, sectioning is continued again—beginning below the first row and continuing on until complete.

4. For illustrations that cannot be satisfactorily reproduced by xerographic means, photographic prints can be purchased at additional cost and inserted into your xerographic copy. These prints are available upon request from the Dissertations Customer Services Department.

5. Some pages in any document may have indistinct print. In all cases the best available copy has been filmed.

University Microfilms International
300 N. Zeeb Road
Ann Arbor, MI 48106

Downloaded from SHAREOK. Persistent Handle URL: https://hdl.handle.net/11244/5294

8425547

Serpkenci, Ray Resit

AN INVESTIGATION INTO THE DETERMINANTS OF RETAIL STORE PERFORMANCE

The University of Oklahoma PH.D. 1984

University
Microfilms
International 300 N. Zeeb Road, Ann Arbor, MI 48106

Copyright 1984

by

Serpkenci, Ray Resit

All Rights Reserved

PLEASE NOTE:

In all cases this material has been filmed in the best possible way from the available copy. Problems encountered with this document have been identified here with a check mark __√__.

1. Glossy photographs or pages _____
2. Colored illustrations, paper or print _____
3. Photographs with dark background _____
4. Illustrations are poor copy _____
5. Pages with black marks, not original copy _____
6. Print shows through as there is text on both sides of page _____
7. Indistinct, broken or small print on several pages __✓__
8. Print exceeds margin requirements _____
9. Tightly bound copy with print lost in spine _____
10. Computer printout pages with indistinct print _____
11. Page(s) _____ lacking when material received, and not available from school or author.
12. Page(s) _____ seem to be missing in numbering only as text follows.
13. Two pages numbered _____. Text follows.
14. Curling and wrinkled pages _____
15. Other _____

University
Microfilms
International

THE UNIVERSITY OF OKLAHOMA

GRADUATE COLLEGE

AN INVESTIGATION INTO THE DETERMINANTS OF RETAIL STORE PERFORMANCE

A DISSERTATION

SUBMITTED TO THE GRADUATE FACULTY

in partial fulfillment of the requirements for the degree of

DOCTOR OF PHILOSOPHY

By

RAY RESIT SERPKENCI

Norman, Oklahoma

August, 1984

AN INVESTIGATION INTO THE DETERMINANTS OF RETAIL STORE PERFORMANCE

A DISSERTATION

APPROVED FOR THE DIVISION OF MARKETING

BY

Robert F. Lusch

Marie Adele Hughes

James McLendelchne

Frank Monarty

Bert C. McCammon Jr.

Joseph Lee Rodgers III

© 1984

RAY RESIT SERPKENCI

ALL RIGHTS RESERVED

ABSTRACT

With the growing importance of the service economy and the much publicized state of lagging productivity gains in this sector, the area of retailing performance has been one of special interest to a number of marketing scholars. However, despite the vast amount of research generated, our knowledge of the conditions that produce the levels of performance in retailing remains scarce.

Previous investigations of retail store performance have been "soft" on adequate theoretical conceptualizations, and overly simplistic in both measurement and statistical analyses. In this study, a holistic construal is used to develop and empirically test a model for the explanation of retail store performance.

This study proceeds from the general assumption that the performance of a retail store can be explained, substantially, by the actions, behavior or patterns of conduct that a unit follows in adopting and adjusting to its market. Hence, performance is posited to be a complex function of unit behavior, which in turn is a function of market conditions. Eleven nonobservational research hypotheses, each containing several subhypotheses are empirically tested in a retail setting.

The results of the empirical analyses indicate that market demand conditions (e.g., quality and potential demand) have a primary influence on retail market structure (e.g., overstoring and competitive intensity). The research findings also indicate that the "direct" relationships between market conditions and various elements of unit behavior (e.g., managerial and marketing effectiveness) are not as strong as they were initially expected. However, both the conditions of market demand and supply, as well as the elements of unit behavior, are found to have important direct and indirect effects on retail store performance.

ACKNOWLEDGEMENTS

Over the past five years, I have been richly blessed with a large cadre of friends, colleagues, and teachers at the University of Oklahoma. In these pages, I would like to pay a personal tribute to these people who gave me so much and to whom, I feel, I have given so little.

Professor James M. Kenderdine and his family have been a major guiding and loving force in my personal and professional growth. Without the unfailing support, warmth, affection and caring of Jim, this effort could not have been completed. To him, I owe a very personal gratitude and a debt I can not possibly repay.

Professor Robert F. Lusch has been a very close personal friend, a mentor, a colleague, and my thesis chairperson. I have enormously benefited from our close association, and this thesis represents only a small fraction of the outcome. I thank him, and his wife, Virginia, for their friendship, affection and understanding in the most difficult times of yester years.

Throughout my doctoral studies at Oklahoma, Professor Bert C. McCammon, Jr. has been a source of constant support and scholarly inspiration. Working with

him has been a wonderfully trying and deeply enriching experience. The research project from which this thesis evolved was singularly due to his encouragement and support. I thank him for giving me the opportunity to be a part of his research efforts and the Distribution Research Program.

Professor Adele M. Hughes has been a close personal friend, counsel and a wonderful teacher. She has been very instrumental in my learning of the quantitative tools and statistical analyses. Professors Malcolm L. Morris and James A. Constantin have been always helping, listening and guiding throughout my studies. I have enjoyed and benefited from their teaching and friendship.

Professors Shane R. Moriarity from the School of Accountancy, and Joe L. Rodgers from Psychology graciously accepted to be part of my thesis committe. I thank them for their participation. And for all my committe members, I am grateful for providing me the freedom and guidance which made the thesis writing long but also an enriching and enjoyable experience. Special thanks also go to the senior management of the company who helped us collect and interpret data and teach us about retailing.

I also wish to acknowledge a number of others who have been a source of much joy to know and be with in Oklahoma.

I benefited greatly from my discussions with the fellow doctoral student Humayun Akhter, who has always been a close and helping friend. Debbie Coykendall read and commented on portions of this manuscript. I will miss her absence at Toronto. The staff at the Division of Marketing and the Center For Economic and Management Research were most accomodating in letting me use the facilities. I would like to thank them for their understanding and patience over the years.

Knowing Deanna Jackson has been a very special part of my life in Norman. Her caring and affection were most instrumental in the completion of this thesis. I will sorely and dearly miss her in the years to come.

Finally, I like to express my gratitude to a most loving sister, Ismet Serpkenci, and a dear friend, Haluk Baristiran, who were always there when I needed them. When significant others gave up, they gave generously. I thank them for their unfailing support, trust and faith.

This thesis is humbly dedicated to my beloved parents, Dr. and Mrs. Ethem Serpkenci.

TABLE OF CONTENTS

ABSTRACT iv

ACKNOWLEDGEMENTS vi

page

INTRODUCTION 1

Streams Of Research In Retailing 4
The Theme Of The Present Study 8
Objectives Of The Study 10
The General Framework Of The Study 13
The Significance Of The Research 15
The Organization Of The Thesis 17

NATURE AND SCOPE OF RESEARCH 18

Organization Of The Chapter 18
Retail Store Performance-- Preliminary Definitions 19
Retailing And The Retail Store 19
The Concept Of Performance 22
Conceptual And Definitional Issues 23
Measurement Issues 28
Implications And Definitions 30
Scope Of Research 32
The 3-D Model-- Nature And Scope Of Research In Marketing 32
A Classificatory Schema 39
The Paradigm Of Research 44
The Concept Of A Paradigm 44
Paradigms In Marketing 46
Paradigm-In-Use In Retailing 47

CONCEPTUAL FOUNDATIONS AND PREVIOUS STUDIES OF RETAILING PERFORMANCE 51

Organization Of The Chapter 53
Conceptual Foundations Of Studies In Enterprise Performance 53
The Market System Concept-- Origins Of Studies In Enterprise Performance 55
Major Streams Of Research In Enterprise Performance 58

An Evaluation Of Research Streams In Enterprise Performance 67
Macroretailing Performance Studies 68
Longitudinal Studies Of Retailing Performance . 69
Cross-Sectional Studies Of Retailing Performance 72
An Evaluation Of Macroretailing Performance Studies 94
Microretailing Performance Studies 97
An Evaluation Of Microretailing Performance Studies 112

A MODEL FOR THE EXPLANATION OF RETAIL STORE PERFORMANCE 114

Organization Of The Chapter 114
Theoretical And Derived Concepts And Their Definitions 115
Nonobservational Research Hypotheses 121
The Relations Between Elements Of Market Demand and Supply 123
The Relations Between Elements Of Market Demand, Supply And Store Performance . 139
The Relations Between Elements Of Market Demand, Supply And Unit Conduct 148
The Relations Between Conduct Elements And Store Performance 161
The Proposed Model Of Retail Store Performance-- A Summary 171

RESEARCH INSTRUMENTS, EMPIRICAL DEFINITIONS AND THE STATISTICAL RESEARCH METHODOLOGY 175

Organization Of The Chapter 175
The Sampling Domain 176
The Research Design And Instruments 180
Correspondence Rules And Empirical Definitions . 184
Empirical Definitions Of The Performance Construct 187
Empirical Definitions Of The Conduct Constructs 193
Empirical Definitions Of Market Demand and Supply Constructs 200
The Statistical Research Methodology 206

RESULTS FROM STATISTICAL ANALYSES 212

Organization Of The Chapter 212
The General Framework Used In Hypotheses Testing 213
The General Format Of Presentation 213
The LISREL Methodology 216

Assessment Of Goodness-Of-Fit In LISREL Methodology 221
Assessment Of Measurement Properties In LISREL Methodology 229
Results from Statistical Tests Of Nonobservational Research Hypotheses 247
The Relations Between Elements Of Market Demand And Supply 249
The Results For Hypothesis-1 249
The Results For Hypothesis-2 256
The Relations Between Elements Of Market Demand, Supply And Store Performance . 262
The Results For Hypothesis-3 262
The Results For Hypothesis-4 268
The Relations Between Elements Of Market Demand, Supply And Unit Conduct 274
The Results For Hypothesis-5 274
The Results For Hypothesis-6 280
The Results For Hypothesis-7 282
The Results For Hypothesis-8 287
The Results For Hypothesis-9 292
The Results For Hypothesis-10 302
The Relations Between Conduct Elements And Store Performance 308
The Results For Hypothesis-11 308
Parameter Estimates For More Complex Models . . 316
A Model Of Supply Structure, Unit Conduct and Retail Store Performance 317
A Model Of Market Structure, Unit Conduct and Retail Store Performance 324

AN INTERPRETATION OF RESULTS AND CONCLUSIONS 332

Organization Of The Chapter 332
An Interpretation Of Results From Empirical Analyses 333
Objectives Of The Research Revisited 333
An Evaluation Of Statistical Results 335
An Evaluation Of Research Results-- H-1 and H-2 335
An Evaluation Of Research Results-- H-3 And H-4 345
An Evaluation Of Research Results-- H-5 And H-6 350
An Evaluation Of Research Results-- H-7,8,9 and 10 351
An Evaluation Of Research Results-- H-11 . 355
An Overall Evaluation Of Empirical Analyses . 356
Implications Of Research For The Management Of Retail Enterprises 359

Some Further Thoughts And Reflections On The Research 377
Contributions To Theory 377
Contributions To Research Methodology 379
Contributions To Practice 384
Summary and Conclusions 386

REFERENCES 388

Appendix page

A. THE CORRELATIONS AMONG ALL THE MANIFEST VARIABLES . 427

B. THE VARIANCES AND COVARIANCES AMONG ALL THE MANIFEST VARIABLES 431

C. THE RESEARCH INSTRUMENTS USED IN THE STUDY 435

LIST OF EXHIBITS

Exhibit		page
1.	A Classificatory Schema For Retail Performance Studies	40
2.	A Classification Of Previous Retailing Performance Research	43
3.	A Path Analytic Schemata Of Research Hypotheses In Industrial Organization Studies	61
4.	A Path Analytic Schemata Of Harvard Studies On Enterprise Performance	64
5.	A Path Analytic Schemata Of PIMS Studies On Business Performance	66
6.	A Causal Schemata Of The Effects Of Per Capita Income On Retail Labor Productivity	76
7.	A Causal Schemata Of The Effects Of Population Growth On Retail Labor Productivity	78
8.	Results Of A Regression Analysis From Bucklin (1978b)	82
9.	Results Of A Regression Analysis From Bucklin (1977)	84
10.	Marketing Approach To Productivity Analysis In Retailing	88
11.	Research Hypotheses Advanced By Lusch and Ingene (1980b)	91
12.	Determinants Of Labor Productivity From Ingene (1982)	93
13.	The Set Of Predictor Variables From Clawson (1974)	106
14.	Definitions Of The Theoretical Concepts In The Structure-Conduct-Performance Paradigm	118

15. Definitions Of The Derived Concepts In The Structure-Conduct-Performance Paradigm 119

16. A Summary Of The Relationships Between The Elements Market Demand And Supply 126

16. A Summary Of The Relationships Between The Elements Market Demand And Supply (Cont.) 127

17. The Proposed Relationships Between Elements Of Market Demand And Supply 134

18. The Proposed Relationships Between Elements Of Market Demand, Supply And Performance 147

19. Elements Of Retailer Conduct From Alderson (1965) 151

20. The Proposed Relationships Between Market Conditions And Elements Of Unit Conduct 159

21. The Proposed Relationships Between Elements Of Unit Conduct And Unit Performance 168

22. Structure Of The Proposed Model For The Explanation Of Retail Store Performance 173

23. The Scope Of The Market Research Study 177

24. The Operating Profile Of The Sample Stores 179

25. The Empirical Definitions Of The Latent Variables 188

25. The Empirical Definitions Of The Latent Variables (Cont.) 189

26. Results Of A Common F.A. On The Dimensionality Of The Performance Construct 192

27. The Latent Variable Model In LISREL 218

28. The Measurement Model In LISREL 219

29. A Hypothetical Model For The Assessment Of Measurement Properties 235

30. Summary Of Statistical Measures In Assessing Results From Statistical Analyses 244

31. Operationalizations Of The Latent Variables . . . 245

31. Operationalizations Of The Latent Variables (Cont.) 246

32. Correlation Matrix For Hypothesis-1 250

33. Model Specification And Standardized Estimates For Hypothesis-1 252

34. ML Measurement Paramater Estimates For Hypothesis-1 253

35. ML Structural Parameter Estimates For Hypothesis-1 254

36. Correlation Matrix For Hypothesis-2 258

37. Model Specification And Standardized Estimates For Hypothesis-2 259

38. ML Measurement Paramater Estimates For Hypothesis-2 260

39. ML Structural Parameter Estimates For Hypothesis-2 261

40. Correlation Matrix For Hypothesis-3 264

41. Model Specification And Standardized Estimates For Hypothesis-3 265

42. ML Measurement Paramater Estimates For Hypothesis-3 266

43. ML Structural Parameter Estimates For Hypothesis-3 267

44. Correlation Matrix For Hypothesis-4 270

45. Model Specification And Standardized Estimates For Hypothesis-4 271

46. ML Measurement Paramater Estimates For Hypothesis-4 272

47. ML Structural Parameter Estimates For Hypothesis-4 273

48. Correlation Matrix For Hypothesis-5 276

49. Model Specification And Standardized Estimates For Hypothesis-5 277

50. ML Measurement Paramater Estimates For Hypothesis-5 278

51. ML Structural Parameter Estimates For Hypothesis-5 279

52. Correlation Matrix For Hypothesis-6 282

53. Model Specification And Standardized Estimates For Hypothesis-6 283

54. ML Measurement Paramater Estimates For Hypothesis-6 284

55. ML Structural Parameter Estimates For Hypothesis-6 285

56. Correlation Matrix For Hypothesis-7 288

57. Model Specification And Standardized Estimates For Hypothesis-7 289

58. ML Measurement Paramater Estimates For Hypothesis-7 290

59. ML Structural Parameter Estimates For Hypothesis-7 291

60. Correlation Matrix For Hypothesis-8 293

61. Model Specification And Standardized Estimates For Hypothesis-8 294

62. ML Measurement Paramater Estimates For Hypothesis-8 295

63. ML Structural Parameter Estimates For Hypothesis-8 296

64. Correlation Matrix For Hypothesis-9 298

65. Model Specification And Standardized Estimates For Hypothesis-9 299

66. ML Measurement Paramater Estimates For Hypothesis-9 300

67. ML Structural Parameter Estimates For Hypothesis-9 301

68. Correlation Matrix For Hypothesis-10 304

69. Model Specification And Standardized Estimates For Hypothesis-10 305

70. ML Measurement Paramater Estimates For Hypothesis-10 306

71. ML Structural Parameter Estimates For Hypothesis-10 307

72. Correlation Matrix For Hypothesis-11 309

72. Correlation Matrix For Hypothesis-11 (Cont.) . . . 310

73. Model Specification And Standardized Estimates For Hypothesis-11 311

74. ML Measurement Paramater Estimates For Hypothesis-11 313

75. ML Structural Parameter Estimates For Hypothesis-11 314

76. Goodness Of Fit Measures For Hypothesis-11 315

77. Supply Conditions, Unit Behavior and Retail Store Performance-- All Stores 320

78. Supply Conditions, Unit Behavior and Retail Store Performance-- Metro Stores 322

79. Supply Conditions, Unit Behavior and Retail Store Performance-- Nonmetro. Stores 323

80. Market Conditions, Unit Behavior and Retail Store Performance-- All Stores 327

81. Market Conditions, Unit Behavior and Retail Store Performance-- Metro. Stores 328

82. Market Conditions, Unit Behavior and Retail Store Performance-- Nonmetro. Stores 329

83. A Summary Of Results From Empirical Analyses . . . 336

83. A Summary Of Results From Empirical Analyses (Cont.) 337

84. Profitability And ROI Impact Of Relative Size And Overstoring 363

85. Profitability And ROI Impact Of Relative Size And Target Market Reach 364

86. Profitability And ROI Impact Of Overstoring And Target Market Reach 366

87. Profitability And ROI Impact Of Target Market Reach and Intercept Competition 367

88. Profitability And ROI Impact Of Relative Size And Intercept Competition 369

89. Profitability And ROI Impact Of Marketing And Managerial Effectiveness 371

90. Profitability And ROI Impact Of Managerial Effectiveness And Expertness 372

91. Profitability And ROI Impact Of Target Market Reach And Marketing Effectiveness 374

92. Profitability And ROI Impact Of Intercept Competition And Marketing Effectiveness 376

CHAPTER I

INTRODUCTION

Over the past decade marketing scholars have substantially resolved two controversies that were major stumbling blocks in the development of the discipline. The "is marketing a science?" controversy, and the extensive discussions on the viability of constructing the theory of or theories in marketing,[1] seems to have culminated in an essay by Hunt (1976a) where he concluded that:

> The study of positive dimensions of marketing can be appropriately referred to as marketing science[2] (p.28).

The "broadening the concept of marketing" debate also resulted in several papers where the conceptual domain of marketing as the "study of human exchange behaviors" was firmly established.[3] The resolution of these controversies

[1] The literature on this topic is extensive. Hunt (1983), Carman (1980), and Schwartz (1963) give summaries. For a sample of original and contrasting views the reader is referred to Converse (1945), Bartels (1951), Buzzell (1963), Hutchinson (1952), Jeuck (1953), Vaile (1949b), Baumol (1957), Alderson and Cox (1948).

[2] In retrospect, of course, Hunt's paper is significant not so much for its mapping of the nature and scope of studies in marketing but for the injection of a philosophy of science perspective into the discussion.

[3] A sample of these debates can be found in Kotler (1972b), Kotler and Levy (1969), Kotler and Zaltman (1971), Luck (1969,1974),Bagozzi (1974, 1975). For a review of attempts at formalization of a theory of exchange in

was important since, collectively, they established a distinct subject matter of study and broadly defined the nature and scope of the investigations in the marketing discipline.

In the years following these debates, we have witnessed a significant shift in both the conceptual emphasis and the research interest in the marketing discipline. Marketing scholars are increasingly moving away from simple descriptions or classifications of marketing phenomena, towards construction and refinement of middle-range theories and more rigorous testing of such theories (Bagozzi 1980b, Zaltman et al 1982). This evolution in the overall discipline, however, has not been uniformly internalized or diffused in all areas of marketing research.

The field of retailing is frequently viewed as one area where such an evolution has been painstakingly slow. From an historical perspective, this view appears paradoxical. Retailing as a link in the exchange process has been a subject of intense inquiry, speculation, and much implicit theorizing in and out of the marketing literature (Hollander 1981). Dixon (1982), for example, traces the intellectual interest in retailing to early Greek philosophers, while Bartels (1976) credits Paul H. Nystorm

---

marketing, the reader is referred to Bagozzi (1979) and Ferrell and Perrechione (1979).

"for the initial conceptualization and development of retailing thought" in the United States at the turn of the century. Richness of thinking in retailing is also evident in Bucklin's (1972) Competition and Evolution in the Distributive Trades, as well as in Barger's (1955) Distribution's Place In The American Economy Since 1869. In a recent essay on retail patronage preference and behavior, Sheth (1983) notes that

> The Journal of Retailing predates the Journal of Consumer Research by half a century, the Journal of Marketing Research by four decades, and even the Journal of Marketing by at least a decade!.., What is conspiciously lacking in this impressive research tradition is the development of a theory.., an attempt at integrating existing substantive knowledge in terms of at least a conceptual framework, or better yet, of a theory of patronage behavior (p.9-10).

Other authors have echoed similar opinions in the contexts of retailing macrotheory (Hollander 1981), retail location (Huff 1981), institutional evolution (Hollander 1980), and retailing in general (Bartels 1981, Hirschman and Stampfl 1980b).

In summary, one is tempted to conclude that despite this rich tradition of research we are yet to have any explicit theories of retailing. Furthermore, when examined from a philosophy of science perspective, much of what we have in the way of laws, theories, models and so forth, are woefully inadequate in explaining and predicting retailing phenomena. Therefore, it is not surprising that retailing

research is often viewed as backward, and that researchers in this field are frequently seen as scientific laggards (Hirschman and Stampfl 1980, p.71)

With this research an attempt is made to bring a degree of rigor to the area of inquiry in retailing broadly known as retailing performance studies. In the following two sections, the major streams of research in retailing are briefly reviewed and the specific area of study in this thesis is introduced. The chapter concludes with the objectives and the significance of this investigation for theory, practice, and methodology in marketing.

Streams Of Research In Retailing

The retailing process, as in most other areas of inquiry in the marketing discipline, is simple to describe and classify. However, it is also an extremely complex phenomena to analyze, predict and "explain." The need to simplify the complexities of this reality has forced most marketing students to focus on rather limited, narrow aspects of retailing. As one reviews previous retailing studies, it appears that the research and theorizing is a relatively disjointed effort, lacking a "unified" focus or thrust. Aside from the more managerial retailing studies, the following major streams of research comprise the bulk of

contemporary thought in retailing.[4]

Beginning with the works of Reilly (1931), Converse (1949), and continuing in the studies by Huff (1964), and Stanley and Sewall (1976,1978), a number of marketing scholars have examined the attraction of retail trade areas, retail sites, and stores with increasing rigor in their research methods. This stream of research, largely an extension of and adaptation from Central Place Theory has been, until recently, a relatively distinct area of inquiry.

Another major stream, involving the institutional evolution and patterns of change in retailing, has also been a relatively isolated area of thought, with a rich descriptive content, yet largely devoid of any predictive quality.[5] More recently, Davidson et al (1976), McCammon and Hammer (1974), Bucklin (1972) and Hirschman (1978) have been significant contributors to the literature on institutional structure and the changes in the structure of retailing, continuing in the "empiricist" orientation of their predecessors.

---

[4] What is reported here is a rather cursory review of the major research programmes. No effort or claim is made for its completeness, since it is only illustrative in the present context. Reader may refer to Hirschman (1981), Hirschman and Stampfl (1980), and Hollander (1980,1981) for similar treatments.

[5] See, for example, Hower (1943), Hollander (1966), McNair (1958) and Gist (1968).

Other scholars such as Hall et al (1961), Schwartzman (1971), Bucklin (1977), Holdren (1960), and more recently Ingene and Lusch (1981) have investigated the determinants of retail structure and productivity at different levels of aggregation. Although it would appear that the institutional change and determinants of structure have a common thread by necessity, the latter stream of research has not been integrated with the earlier works.

In the past several years, we have observed an intensification of research building upon Martineau's (1958) Personality of the Retail Store.[6] Research in this area has helped bring together the thinking in the behavioral area (e.g., shopping preference, intentions, motivations, store image), strategy (e.g., store positioning, location), and the characteristics of the market (of buyers and sellers) in "retail patronage" studies.[7] What is conspicuously absent in this promising stream of research, however, is any reference to the notion of performance. Many times, it appears that "patronage," per se, or some measure of shopping frequency is posited as the sole indicator of "performance" for the

[6] The studies by Fisk (1961), May (1971,1972,1981), Pessemier (1979,1980), Darden (1979,1980), Arnold et al (1983), Sheth (1983), and Tigert (1983) are illustrative of these efforts. Peterson and Kerin (1983) provide an excellent review of research, progress, and gaps in this literature.

[7] See, for example, Journal of Retailing, Winter 1974-75 Special Issue, Darden and Lusch (1983), and Lusch and Darden (1981).

retail unit. Trying to understand why people shop in the places they do without examining the results of such behavior from the establishment's perspective lacks closure.

The stream of research which may be loosely categorized as retailing performance studies also has a long tradition. In many ways, however, it is difficult to separate marketing performance studies from the investigations of retailing performance. This is especially true in reviewing the earlier literature which had a predominantly macro outlook, and when marketing was primarily seen as distribution.[8]

More recent investigations, especially those of Bucklin, Lusch, and Ingene, have a tight institutional focus in sharp contrast to earlier studies. These authors have utilized aggregated data at either the sectoral or the SMSA levels, and have employed a common methodology in their research.[9] However, this is a mixed blessing, since the research methods used in these studies have significant

---

[8] See, for example, Alderson (1948), Cox (1948), Vaile (1949,1956) Bucklin (1975), Sevin (1965). In this regard, a collection of papers published following a marketing productivity symposium is also illuminating (University of Illinois Bulletin 1960).

[9] For a representative sample of the literature due to these authors, the reader is referred to Bucklin's short text published by the American Marketing Association (1978a), and to Bucklin (1972,1977,1978b), Bucklin and Takeuchi (1977), Ingene and Lusch (1980), Lusch and Ingene (1980), and Ingene (1982,1983a,b,c).

limitations.[10]

In summary, marketing and nonmarketing scholars have both shown a great deal of interest in the description, organization, and "explanation" of the various aspects of the retailing phenomena. Clearly, much has been learned in the process. However, it is also true that more theorizing needs to be done, and many aspects of the retailing process remain to be explored and understood (cf., Hollander 1981, Bartels 1981, Rosenbloom and Schiffman 1981, Hirschman and Stampfl 1980). With this cursory review as a background, the balance of this chapter presents an overview of the major theme, objectives, and the significance of the present investigation.

The Theme Of The Present Study

With the growing importance of the service economy and the much publicized state of lagging productivity gains in this sector, the area of retailing performance has been one of special interest to a number of marketing scholars.[11] What initially started as a defensive effort (i.e., whether "distribution costs too much?") has subsequently evolved

[10] The reference here is to statistical tools (i.e., correlational or regression analyses) that are used in the empirical research in this area.

[11] We should also note the extensive research done by nonmarketing scholars, notably the group associated with the NBER. See, for example, Stigler (1956), Kendrick (1961,1973), and Fuchs (1968).

into inquiries of deeper and more conceptual issues, (e.g., why and how distribution institutions or systems perform the way they do?). However, despite the vast amount of research generated, our knowledge of the conditions that produce the levels of performance in retailing remains limited.

The "macro" approach which has come to dominate research in this area has not produced actionable new knowledge. This is because retailing is principally a "local" phenomena and such macro findings are of little use or interest to retail managers in programming their operations. Hence, if one were to view productivity and financial performance of the retail sector as the culmination of the operations of the individual units, and for a moment accept the conclusions of most retail analysts, our "record" in theorizing and research in retailing is dismal at best. In order to understand what influences the levels of financial and economic performance in retailing, one must look at the microcosm--the retail store.

These comments should not be construed as a call for "managerial relevance" in our thinking of retailing phenomena. However, the present study does call for "breaking away from undifferentiated macro concepts" and turning to a more rigorous study of the real retail "industry" itself. In this regard, investigations in retailing at the macro level (i.e., so called industry

studies) are defective not so much because they are not managerially relevant but because they are conceptually unsound.

Consider, for example, the following theoretical definition of an industry from economics:

> An industry refers to a group of sellers or of close-substitute outputs who supply a common group of buyers (emphases added, Bain 1968, p.6).

In this sense, the retail industry clearly exists only at the level of a rather limited market area and not at the level of aggregates produced by the census. Hence, if one desires a true understanding of the retailing process, and especially of the performance of the retailing industry, one must think of retailing in microcosm. Therefore, it appears that there is a significant need for us to reformulate our thinking, and to investigate the factors, linkages, and mechanisms that have been posited to influence retailing performance under this light.

Objectives Of The Study

What aspect of retailing phenomena to choose for a "scientific inquiry" is essentially an arbitrary choice depending on the interests and the resources of the researcher. However, although the conventional and practical considerations weigh upon any choice, a scientific inquiry into retailing should attempt to contribute to the theoretical foundations of the marketing discipline.

As part of this researcher's commitment to the inquiry into the meaning and measurement of economic performance in channels of distribution and in channel institutions, the objective of the present study is to investigate the determinants of retail store performance. The primary research question in this study is simply the following:

Why do retail stores perform the way they do?

Of the four levels of understanding in explanation, the question why is indeed the most difficult to answer.[12] An adequate answer requires not only the determination and specification of relevant factors, but also the structure and causal ordering of the relationships among them (Bagozzi 1976). In this research, therefore, an attempt is made:

1. To identify a set of factors that systematically impact retail store performance, and
2. To investigate some of the possible mechanisms through which they operate in a retail setting.

---

[12] The four levels of understanding refer to simple statements of fact and to answers for the "what," "how," and "why" questions. As Bagozzi (1980) notes, "the achievement of understanding in explanation can be seen to occur on various levels ranging from weak or descriptive explanation on the one hand to strong or "why" explanation on the other." The reader is referred to Zaltman et al (1973, p.129-131) and Bagozzi (1980, p.84-5) for more extensive treatments.

As most philosophers of science point out, however, science and scientific inquiry not only try to understand the world and explain phenomena but also seek to control it (Hunt 1983, Hempel 1966). Therefore, closely related to the primary research question of this investigation, a second question inevitably follows:

> What can one do to change the performance of a retail store?

Accordingly, an inseparable second purpose of this study will be to attempt to bridge the gap that so often seems to exist between theory and practice.[13] However, given the assumptions and limitations that are inherent in any study of this kind, the answer(s) to this question can only be suggestive in nature.

---

[13] Traditionally, the twin questions posed above are dichotomized into positive (what is or happens) or normative (what ought to be). As Machlup (1969) eloquently explains, however, there is a third type, the "instrumental" questions (i.e.,what can happen). In many respects these questions do not have a normative content. The secondary research question is posed in this spirit.

The General Framework Of The Study

In any attempt at explanation, prediction and understanding of a phenemenon, there is always a framework that guides the research and the researcher. Such frameworks, maps or paradigms, however, are rarely explicated in our professional discourse. As Bagozzi (1976) notes

> any theoretical approach builds on a number of premises, and proceeds from a particular orientation, or Wettanschauung, and consequently conflicts on a priori basis with alternative approaches (p.3).

In a recent text on Theory Construction In Marketing Zaltman et al (1982) express identical sentiments, noting that

> As researchers, managers or consumers, we are constantly making observations about our environment which are organized to form a "map" of our experiences... This map represents our point of view or frame of reference in approaching a particular problem, developing a theory or collecting and interpreting observations (p.141).

Therefore, it is incumbent on the researchers, in the interest of intellectual honesty, to make these assumptions and limitations explicit (Bagozzi 1976, p.3).

Essentially, the paradigm used in this research is similar to the Structure-Conduct-Performance (SCP) world view, which is an extension of the generic Stimulus-Organism-Response (SOR) paradigm of social sciences.[14]

---

[14] The adoption of a paradigm should not be seen in the same light as the choice of a research problem. Clearly the

Hence, this study proceeds from the general assumption that

> at any given point in time, the performance of a retail store can be explained, substantially, by the actions, behaviors or the patterns of conduct that a unit follows in adopting and adjusting to its market.

It is important to note that the concept of a "market" in this paradigm refers to a closely interrelated group of buyers and sellers in a given geographical area. In this regard, the market concept includes but is not restricted to the notion of "structure" (of the sellers) in industrial organization theory.

In summary, then, the overall objective of this study is twofold. In trying to explain and understand the phenomenon of retail store performance:

1. It is hoped that a contribution can be made to the existing thought and theory in the marketing discipline, and further,
2. A frame of reference can be provided for the retail executive and manager, which can be used to more effectively manage retail establishments.

---

latter is a normative decision, whereas the paradigm-in-use is an assumption on the part of the researcher as to how the world works.

The Significance Of The Research

The research questions in this study are important for several reasons. The order of presentation which follows reflects the order of importance as perceived by this writer.

First, in its present form the retailing literature in the marketing and allied disciplines is soft on adequate theoretical conceptualizations and, consequently, weak in its practical implications. Previous investigators have been reluctant or, at best, ambiguous in providing a general paradigm of research and a clear conceptualization of the factors for the explanation of retail store performance. In this regard, this researcher strongly concurs with Bagozzi (1976) in that

> the time is ripe for marketing to progress from being a form of technology where theories and methods of allied disciplines are applied to so called marketing problems to a stage where marketers propose and test theories of their own (p.3).

With this study a step will be taken in this direction.

Second, in the area of research methodology, previous studies of retailing performance have been overly simplistic in both measurement and statistical analysis. In most cases, reliability and validity issues have been completely ignored, and the testing of hypotheses have typically relied on simple operationalizations of, admittedly, latent variables. In this study a holistic

construal will be introduced for representing and testing a proposed model of retail store performance (Bagozzi and Phillips 1982, Bagozzi 1984). By explicitly modeling the theoretical and empirical concepts, nonobservable hypotheses, and the extent of measurement errors, it is hoped that some of the deficiencies of previous research will be avoided.

Finally, the study is significant in an instrumental sense. From the perspective of the firm, a purported theory of retail store performance, to the extent it stands up when confronted with data from the real world, can be used to better understand the phenomena.[15] Through knowledge that may be gained with this and other similar studies, one may help retail managers to better locate, open and operate retail stores, to more effectively manage retail establishments and resources, and to better control their operations.

From the viewpoint of society, then, the study is also significant. To the extent new knowledge is created, diffused, and used in the field, one can hope to see a better allocation and management of the physical, financial, and human resources of retail enterprises, and ultimately,

---

[15] "The term 'real world' is employed in reference to all situations not constructed for, or altered by, the conduct of research. It is not meant to imply that research settings do not have their own reality" Calder, Phillips and Tybout (1981, p.197).

a better utilization of the resources of society.

The Organization Of The Thesis

The thesis is organized around seven chapters. Chapter two defines the primary subject matter of study and delineates the nature and scope of the present research. Chapter three provides an overview of the conceptual and theoretical foundations of research, followed by a selective review of the previous studies of retailing performance.

Chapter four contains definitions of the theoretical and derived concepts used in the study and presents the nonobservational research hypotheses. These research hypotheses, collectively, form a tentative model for the explanation of retail store performance. Chapter five summarizes the research methodology, including a description of the data sources and the statistical tools used in the empirical tests of the research hypotheses.

Chapter six presents a general framework for empirical analysis, followed by the results of the statistical tests. The analysis and interpretation of the substantive findings are summarized in Chapter seven. The thesis concludes with a discussion of the implications, significance, and the contribution of this investigation to theory, practice and research methodology in marketing.

CHAPTER II

NATURE AND SCOPE OF RESEARCH

In most fields of social science, an investigator rarely has the benefit of well formulated theories to help delineate the boundaries of research. In this regard, the fields of marketing in general and retailing research in particular are no exceptions. It is necessary, therefore, for the researcher to specify the subject matter under investigation, and to establish the nature and scope of the inquiry. The purpose of this chapter is to communicate what precisely is being investigated, with what frame of reference, and where and how this study fits within the larger mosaic of investigations in the field of retailing.

Organization Of The Chapter

This chapter is in three major sections. The first section begins with a description of subject matter of this study where the terms retailing, retail store, and the concept of "performance" are defined. In the next section, a brief commentary on the nature and scope of investigations in marketing and a classificatory schema is presented to delineate the scope of the study. The last section explores the meaning and role of paradigms in marketing and retailing

research. The chapter concludes with the specification of the paradigm used in this study.

Collectively, the views expressed in this chapter should provide the reader with a general idea of the major guiding assumptions, beliefs and biases of this writer, and hence the limitations of this inquiry.

Retail Store Performance-- Preliminary Definitions

Retail store performance is an extremely broad phenomenon which may take on an entirely different meaning, depending on how one views the retailing process and at what level of aggregation one chooses to analyze it. Furthermore, several unique attributes of the "performance" notion itself, coupled with the laxity with which the term is used, also add ambiguity to the dicussion. Therefore, it is useful to define each of the key concepts as they are used in the context of this investigation.

Retailing And The Retail Store

Hirschman and Stampfl (1980) in a recent paper have noted that

> at the heart of many problems in retail research seems to be a lack of focus and a clear definition of retailing itself (p.68).

Although such a view is sure to have its skeptics, it points to an often overlooked development in retailing. These

problems in defining what retailing is and what precisely constitutes retail research can be traced to the evolution of thought in the marketing discipline itself. As a branch of inquiry in the marketing discipline, the field of retailing could not and has not been immune to the debates concerning the proper conceptual domain of the construct labelled marketing.[16]

It is not, therefore, surprising that the concept of retailing today has come to embrace activities of such diverse conduits as stores, mail-order establishments, house-to-house sales, hospitals, educational institutions, and even churches. Although such a "broadened" concept of retailing may have much heuristic and pedagogical value, it is of little use in a study of this kind.[17]

For the purposes of this research, the retailing process is defined as those set of activities involved in the selling of goods and services to ultimate consumers (Stern and El-Ansary 1982, p.43). This traditional definition is the most parsimonious and is the same conceptualization expressed by the definitions committee of

---

[16] The latter discussions have been well summarized in the marketing literature (e.g., Hunt 1983,1976, Kotler 1972b, Robin 1977a, Bagozzi 1974,1975, Bartels 1974). In retailing the literature is scanty at best (see, for example, Bartels 1981 and Hirschman and Stampfl 1980).

[17] In fact, it is an open question if we could ever hope to explain the behavior of all "retailing" forms within a single theoretical framework.

the American Marketing Association nearly four decades ago (Journal of Marketing 1948, p.213).

Retail stores, of course, are but one of a large number of institutional forms which are set up to engage in selling or exchange activities with ultimate consumers. Several key characteristics of retail stores, however, set them apart from other forms of organization. With these characteristics in mind a retail store in this study is defined as a profit seeking reseller establishment which employs people, in a unique spatial location and with permanent physical facilities, operating within a well definable local area, and where merchandise and services are provided in exchange for money to the ultimate user or consumer. Hence, by this "intensional" definition,[18] many forms of retail establishments which would otherwise fall into the domain of the retail store concept are excluded from analysis.[19]

---

[18] An intensional definition of a concept "lists a set of properties such that the term applies to all things having that set of properties, and to nothing else." Although controversial, criteria for "good" intensional definitions include: a good definition must not be too wide or too narrow; it ought to avoid unnecessarily vague, ambigious, obscure, or metamorphical language; it must not be circular; and it should state the essential properties of the things named by that term (Kahane 1973, p.179-184).

[19] For example, mail-order retailers (no unique location or local operations), vending machines (no people employed), hotels, motels, restaurants etc., (no merchandise is offered), all nonprofit (retail) service organizations and so forth.

The Concept Of Performance

The problems with defining and measuring the performance concept are not new (Buzzell 1972). Economists have been debating the issue since Adam Smith and they are no closer to agreement today than they were then (cf., Bain 1968, Vernon 1972, Weiss 1974, and Scherer 1980). When marketing emerged as a separate area of study at the turn of the century, some of the earliest writings dealt with the meaning and measurement of productivity in marketing or of marketing institutions--a key aspect of performance.[20] As Buzzell (1972) points out

> so much has been said and written on [marketing and economic] performance that it is very difficult to offer any new ideas on the subject (p.1).

Over a decade later, marketers, like the economists, are unable to form a consensus on either the meaning of the concept or its measurement (Arndt and Helgesen 1981, Bucklin 1975,1978a,b). Two aspects of this problem, one relating to the several characteristics of the term itself, and the other concerning the efforts at measurement, are closely intertwined and are the source of much of this difficulty.

---

[20] There is extensive literature on these issues. See, for example, Walker (1946), Alderson (1948), Cox (1948), Vaile (1949a,1956), Banks (1951), Smith (1953), Barger (1955), Converse (1957), and Beckman and Buzzell (1958).

Conceptual And Definitional Issues.

The term "performance," in both ordinary discourse and in a technical, scientific sense, refers to a remarkably ambiguous concept. This ambiguity stems from the unique quality of the term in that it derives meaning only in the context of its use. Hence, we either speak of economic performance, financial performance, etc., or performance of a firm, industry, actor or product, etc. In either case, if an explicit definition is lacking, the meaning of the concept is usually implied by some sort of a consensus criteria assumed to be known and accepted by all parties. However, when a number of unique properties of the term are overlooked in such implicit discourse, it creates confusion. In this regard, three key attributes of the concept, namely, the nonnegative/relativity, the process-product ambiguity, and the inherently multidimensional nature are especially worthy of attention. It is useful to briefly review these features of the term in order to understand what "performance" means in the context of the present discussion.

Nonnegative/relativity of a term or concept refers to an attribute, when a term or concept does not appear to have an "absolute zero." In the case of "performance," however one may choose to qualify the term, it is not meaningful to speak of nonperformance, but only of its

degree or the quality of its presence.[21] Hence, we frequently refer to "high vs. low," "good vs. bad," or "satifactory vs. unsatisfactory" levels (or amounts) of performance due to an act, actor or thing, but never to its absence. To the extent this quality of being absent can be equated with a state having an absolute zero, the performance construct does not seem to have such an origin. Thus, in the absence of a unique starting point, we tend to anchor a level of performance as a criterion, and measure the amount due to a given source accordingly.[22] Because of this unique quality, the concept of performance always implies a relative and, ultimately, a normative content.

Process-product Ambiguity refers to a common attribute shared by a group of terms or concepts, such as harvest, education, science, deduction, etc.[23] All of these

[21] For example, if your car did not start on a cold January morning, it is not true that it has zero performance, rather it simply did not start. The point is that the "performance" concept is meaningful only in the context of living, functioning or existing actors, things or organisms.

[22] The performance of a football team (a given number of W/L record, total amount of offensive/defensive yardage), a jet engine (fuel consumption per mile/hour/passenger, rpm, etc), Roger Moore as 007 (Sean Connery as 007), a business firm (a level of ROI, market share, or growth), an economy (a level of employment, or price stability, absence/presence of normal profits etc) are examples. Obviously, all these anchors may or may not have an objective basis but the "choice" of a level is generally arbitrary.

[23] In the interest of clarity, it should be noted that "process-product" ambiguity is a label given to these

terms, like performance, are

> used to refer both to a certain activity or process, and also to an outcome, eventuation or product of that process" (Rudner 1966,p.8).

The Oxford English Dictionary (1971), for example, defines performance as both: [a] "carrying out of a command, duty, purpose... an act of execution, or fulfillment," and [b] "an accomplishment, something performed or done, an achievement, or a deed" (p.689). In other words, performance may be used to refer not only to an act but, also to the result or consequences of the act.

This distinction is not a trivial matter. In fact, it underlies, at least partially, the differences among the early economists and marketers concerning the "unproductive" nature of marketing.[24] The significance of this distinction may be summarized as follows:

---

terms by philosophers of language (Rudner 1966). The previous labelling, "nonnegative/relativity," is a concoction of this writer.

[24] It is well known that the classical economists have condemned marketing activities (e.g., advertising and promotion) on the premise that they add no real value to physical products (cf., Bain 1968, Scherer 1980, Buzzell 1972). Here, the view of marketing's "performance" is a set of "activities or behaviors." Marketing scholars, on the other hand, having long resolved the "value" of marketing's functions (e.g., Weld 1917, Ryan 1935, Jones 1943, Alderson 1965), have viewed marketing's "performance" in its latter context, i.e., the "results" of the marketing behavior or actions (cf., Barger 1955, Alderson 1948, Cox 1948, Bucklin 1978b).

An explanation of performance as a "behavior" or an "act" versus performance as the "results" or "outcomes" of that behavior, although somewhat interrelated, are different inquiries. Whereas the latter explanation would be substantially incomplete without the knowledge of the antecedent actions; the former explanation of performance (in the sense of behaviors) may have antecedents which may be completely unrelated to outcomes. Hence, given the "import of close interrelation between concept and theory formation," it is important that such ambiguities are resolved (Hempel 1972).

On the final attribute of the performance concept, i.e. its Multidimensional Nature, there appears to be no disagreement. Scherer (1980), for example, notes "performance is a multidimensional attribute" as does Bain (1968), pointing out that "performance... however we measure it, is complex and has many aspects or dimensions." Not unlike economists, marketing scholars share substantially the same view (cf., Buzzell 1972, Bucklin 1978b, Stern and El-Ansary 1982). The disagreement between (and among) economists and marketers, however, lies in three interrelated questions:

1. What are the (relevant) dimensions of performance?
2. Are some dimensions more/less important than others? and,

3. How do we go about measuring each?

There are no clear cut answers to any of these questions. In the context of the present study, for example, one can enumerate a number of performance dimensions for a retail store, such as:

> An Economic Performance Dimension [e.g., profitability, productivity, growth, contribution to material well-being of a community, nation etc.]
>
> A Social Performance Dimension [e.g., consumer content/discontent, quality of worklife, service levels to elderly, etc.], and
>
> A Political Performance Dimension [e.g., lobbying efforts, power or influence in elective processes or in a channel environment].

Obviously, such a list can be extended and various combinations of each dimension can be devised to produce other unique dimensions of performance.

The second question is a normative query and an answer to it will depend on the orientation, interest, and/or curiosity of a given researcher. Thus, it would appear that the first two questions can be disposed of with relative ease, since the relevance and importance of any one dimension depends on the perspective and the purpose of study. The question on measurement, however, can not be brushed aside as easily.

Measurement Issues.

The issues with measuring economic dimensions of performance can be best described under two major headings. The first set of issues are more conceptual and concern the philosophical or methodological orientations found in economics and in the marketing discipline. The more frequently discussed second set of issues are more practical and concern the tasks in "taking measurements" in the course of an empirical investigation.

The conceptual problems of measurement arise when the "gaps between the languages of theory and empirical research" are overlooked (Blalock 1968). In this regard, the earlier forms of positivism and empiricism appear to be still in vogue in the conduct of research in most areas of economics and marketing (Bagozzi 1980,1984, Bagozzi and Phillips 1982). According to this orientation due to operationalists (Bridgman 1927, Eddington 1933), Hempel (1952) notes:

> any scientific statement, however abstract, could be transformed, by virtue of the definitions of its constituent technical terms, into an equivalent statement couched exclusively in observation terms: Science would really deal solely with observables (p.24).

Hence, the triumph of science, in this view, consists of establishing numerical connections among several pointer readings, since

> there must and can be only one operational definition for each scientific term or concept (Bridgman 1927, p.6).

Since this radical empiricist position has long been refuted in the philosophy of science literature, one would expect that the notions associated with it are avoided in social science research.[25] Unfortunately, the firm and industry performance literature in both the economics and marketing disciplines are replete with examples where a single "proxy" is used to measure economic performance. This practice of ascribing an unwarranted unidimensionality to the performance concept combined with naive assumptions about reliability of our instruments are at the heart of the conceptual problems of measurement in this area.

The second set of issues which deals with problems of obtaining or taking measurements, are well recognized and little elaboration is needed. However, this does not imply that they are of little or no importance. The following passage from Morgenstern (1972a) summarizes the issues involved:

> Much of what goes on as "measurement" hardly deserves this name. This applies, for example, to the hollowed "GNP," a largely useless notion which as a scalar (?) is supposed to tell about growth of a complex system, forever increasing in complexity, and which, stupidly, even, records any malfunction of the system as a positive change.[26] Thus there are good as well as useless concepts.

---

[25] See, for example, Hunt (1983) for a brief review of the notions and criticisms of operationalism. Blalock (1968) also provides an excellent review and discussion of the same.

[26] "If you are stuck in a traffic jam on the ground or in the air, GNP goes up..." (Principle author's footnote).

> As to measurement accuracy, there is hardly any discussion and awareness... So it is not surprising, albeit regrettable, that the inevitable measurement errors... are never systematically incorporated in theory, in computation or in interpretation. There almost seems to exist a conspiracy against the recognition and study of measurement errors (p.701-2).

Implications And Definitions.

The implications of the preceding discussion can be summarized as follows: First, the major concern in this study is with the identification and causal ordering of the factors which may impact the "systematic variation" in store performance. This is in contrast to a study of the determinants of high vs. low, or good vs. bad performance, which inevitably begs an evaluative or normative criterion. Accordingly, the performance construct in this research is not and should not be viewed as a relative or normative feature of a retail unit. Second, in this study the notion of performance is viewed as the "results or consequences" of the actions of the retail unit (and other environmental variables) as opposed to the "behavior" of the retail unit. Generally, this is the established usage of the concept in the marketing discipline.[27] Third, in this study only a single dimension of the performance concept, the "economic results" of store operations, is considered. It should be

[27] Other terms, such as, behavior, conduct or strategy are more suitable to describe the process-oriented meaning of the performance construct.

noted, however, that the term economic results, in itself, implies multiple constructs. In this regard, this distinction serves not as a definitional criteria but as a delineation of the scope of this investigation. Finally, performance concept in this study is viewed as an unobservable, latent variable which derives its meaning in part through its formal definition and in part through its relation to a number of observable variables (see, Chapters 4 and 5).

In summary, performance in the context of the present study is defined as the composite economic outcomes of the functioning of a (retail) unit in a given time and market. Furthermore, it is assumed that these economic outcomes are manifested and fully represented in measures of physical and financial efficiency of a store's operation. In this regard, physical efficiency or productivity is defined as the rate at which the physical, capital and human resources of the (retail) unit are combined and converted to outputs, and similarly, the financial efficiency or profitability is defined as the degree to which a (retail) unit's outputs, valued at current prices, exceed its costs.

Scope Of Research

The primary intent of the previous discussion on retailing, the retail store and the concept of performance was to establish the subject matter of the present study. Clearly, some of the issues alluded to in the previous paragraphs can also be regarded as elements of the scope of this research.

In this section, attention is turned to some of the possible alternative foci that one may use in viewing the retail unit and the level of analysis that one can choose in a given study. The discussion is structured around a classificatory schema which summarizes the scope of both the previous studies and the present effort, as well as pointing out some areas yet to be explored in retailing research. While the proposed schema incorporates some of the notions due to Hunt's (1976a) general framework, it also presents some new viewpoints. In this regard, a brief review of the controversies generated by Hunt's (1976a) essay provides a good point of departure to introduce the scope of present research.

The 3-D Model-- Nature And Scope Of Research In Marketing

Since its publication, The Three Dichotomies Model has become somewhat of a "norm" in delineating the nature and scope of research in marketing. Although frequently

used and its basic tenets well accepted, the model has not been immune to criticism.[28] While some of these criticisms concern definitional issues, others are more philosophical, raising important questions on how we conduct scientific research in the marketing discipline.[29]

The most recent and relatively less complicated of the definitional issues is illustrated in the controversy over the micro/macromarketing dichotomy proposed in the original essay. The essence of the debate on the micro/macromarketing distinction has centered around Hunt's original criterion for the classification of the micro/macromarketing events.[30] The level of aggregation of the actors "as the primary delineating criterion among the two sets of events," it is argued, was incomplete and inadequate (White and Slater 1978). The critics proposed that

> the level of aggregation of the impacts or effects of the activities of the marketing actors to be the primary determinant of the distinction between

---

[28] See, for example, Robin (1977a,b), Etgar (1977), Ross (1977), White and Slater (1978), White (1979), Hunt (1978), Hunt and Burnett (1982).

[29] At the time this section was written, Hunt's (1983) Marketing Theory The Philosophy of Marketing Science was not published. Some of the views expressed here have been incorporated in this new edition.

[30] Micromarketing is defined to "refer to the marketing activities of individual units, firms, consumers or households," whereas macromarketing "refers to a higher level of aggregation, usually marketing systems or groups of consumers" (Hunt 1976a, p.20).

micro-macro" (White 1979).

According to this view, the societal impacts of a firm's activities could be viewed as a macromarketing investigation, similar to a study of the environmental impacts of the marketing sector as a whole. In a recent article in the Journal of Marketing, Hunt appears to have modified his original criteria to conform more closely to the critics' view (Hunt and Burnett 1982). However, the new taxonomical model proposed by Hunt and Burnett (1982) goes further, suggesting not two, but

> three classificatory criteria to be both necessary and sufficient to specify macromarketing/micromarketing dichotomy: level of aggregation [of actors], perspective of [an actor or society], and consequences of [the activities of an actor or group of actors]" (p.23).

Hence, as the authors also concede,

> many of the problems in the literature [presumably, including Hunt's own] concerning the distinction between micro/macromarketing have developed from ill-guided efforts to find a single classificatory criterion" (Hunt and Burnett 1982).

The more conceptual issues raised regarding the nature and scope of research in marketing are not unique to our discipline. All social science disciplines in various stages of their growth have tried to answer similar questions without complete success. In the context of marketing, the normative/positive dichotomy proposed by Hunt and the subsequent controversy generated illustrate some of the issues involved.

The distinction made by Hunt (1976) between positive and normative studies of marketing by Hunt was vigorously challenged in the literature (Robin 1977a,b, Ross 1977, Etgar 1977). The debate here, unlike the one on the macro/micromarketing discussion, centered not so much on definitional issues, but on the necessity and meaningfulness of the dichotomy itself. Critics argued that

> positive studies in marketing are of little interest unless they are given prescriptive overtones, and that... such [positive] issues are barren except where they have prescriptive [normative] implications (Robin 1977a).

In this regard, the critics questioned whether the conduct of, and justification for, research in marketing and the ultimate use of its results could be separated in a discipline where

> the ultimate test of a marketing theory is not the acceptability of the theory on the part of marketing researchers... but its acceptance by marketing managers (Churchman 1965, p.33).

This is a hollow point and has been extensively addressed by Hunt in a rejoinder to his critics (1978) as well as in his recent text.[31]

Another dimension to this problem which has received a fair amount of attention in other social science disciplines has only recently reached the marketing literature. This issue concerns not only the "conduct of

[31] By analogy, this would imply that the theories of physics are not theories unless the engineers say they are and accept them as such.

scientific research," per se, but also the special nature of the "subject matter" in social sciences. Morgenstern (1972a), in an excellent essay on the descriptive, predictive and normative aspects of theory and scientific research in economics discipline summarizes the view as follows:[32]

> Nature does not care--so we assume--,whether we penetrate her secrets and establish successful theories about her workings, or apply these theories successfully in predictions. In the social science, the matter is more complicated and in the following lies one of the fundamental differences between these two types of theories: the kind of economic theory that is known to the participant in the economy has an affect on the economy itself... Thus a "backcoupling" or "feedback" that exists between theory and the object of the theory is an interrelation which is definitely lacking in the natural sciences (p.706-7).

Morgenstern's observations have important implications for the proposed normative/positive dichotomy in marketing. It can be argued that positive marketing studies, by attempting to describe, explain, and predict the marketing activities, processes or phenomena that actually exist, via absorption among the participants, may also lead to what marketing organizations and individuals (ought to) do. In other words, social scientists, by observing the economic or social phenomena and theorizing about them, may change them.

---

[32] Similar views to Morgenstern's are also expressed by Machlup (1978, chapters 12-14) and Schutz (1953). Machlup's essay, "If Matter Could Talk," written in response to Nagel (1961) is especially illuminating.

Hence, after a finite interval, questions "what is" and "what ought to be, is" become no longer clearly distinguishable. The extensive literature generated through the PIMS program, especially the widely publicized empirical link between ROI and market share, is illustrative in this regard.

The position of this writer on this difficult subject and the perspective taken in this research are as follows: It is a valid argument that the social, economic and marketing phenomena are all, indeed, due ultimately to value-laden human actions and behavior. However, this should not obscure the distinction between the "nature" of the phenomena and the "conduct" of research on such phenomena. The values or evaluative criteria human actors use in various capacities (as consumers, business executives, etc) influence their decisions to exchange, buy, sell, hire, invest, borrow and so forth. These, however, are "datums" that come with social and economic phenomena and are in "the nature of things." This status quo, decidedly different from the one found in natural science, does not preclude the social scientist from dealing objectively with the subjective values of such actors, manifested in their behavior, actions and reactions. This, in essence, underlies the distinction made in this study between the inherently normative character of the

performance notion and the study of its systemic, impartial determinants.[33]

This brief discussion on the key elements of Hunt's 3-D model illustrates that the delineation of the nature and scope of research is anything but a routine, pigeonholing exercise. It requires a specification of not only the classification of research in the traditional sense, i.e., what it purports to analyze and how, but also a specification of the world view that guides the research and the researcher.

---

[33] Another debate that has emerged in the marketing discipline and its implications for the nature and scope of research in marketing should also be noted here. Some of these issues were a source of much of the discussion at the 1982 and 1984 AMA Theory Conferences (cf., Peter et al 1982, Sauer et al 1982, Ryan and Shaughessy 1982, Brodbeck 1982, Hunt 1982). With the ascendence of a group of marketing scholars who espouse a "realist" and "contemporary" philosophy of science, the foundations of the normative/positive dichotomy, the logical empiricist position, has come under severe attack (see, for example, the special issue of the Journal of Marketing, Fall, 1983). Although each group is far from being a unified collectivity, several issues sharply divide them (e.g., Is scientific research a dispassionate, value free endeavor where the researcher is an objective observer?, Does there exist a reality independent of the researcher's perceptions?, Is there one scientific method?, etc). Contemporaries who dissent on an affirmative answer to such questions, by extension, reject the normative/positive dichotomy as a useful classificatory criterion in marketing research.

A Classificatory Schema

Exhibit 1 presents a classificatory schema to delineate the alternative perspectives or foci one may take in the study of the retail store and its performance. Several definitions are useful for a proper interpretation of the schema.

The perspective on level of analysis, the micro-macro distinction, refers to the degree to which the activities of an entity and/or consequences of such activities are viewed internally, from the unit's perspective, or externally, from the society's perspective.[34] Hence, in this conception, microretailing performance studies primarily deal with the retail unit, the retail firm or a group of firms where the perspective is predominantly that of the individual store or firm. Macroretailing studies, on the other hand, focus on societal impact of the performance of retail units, most commonly but not necessarily, at the level of an industry or sector.[35]

The perspective on unit of analysis, the vertical dimension, refers to the primary conceptualization of the retailing unit either as an economic entity or a

---

[34] In this respect, the term "degree" implies and emphasizes the difficulties in a simple dichotomy.

[35] This is because studies at the firm level can also be properly classified as "macro" studies (e.g., the impact of Sears or Penneys on the consumption patterns of the aged).

EXHIBIT 1

A Classificatory Schema For Retail Performance Studies

Perspective on The Unit	Perspective on Level Of Analysis: Micro	Macro
ECONOMIC ENTITY		
An Independent Business Unit	Unit profitability, productivity, growth, and market share gain	Sectoral studies of productivity and/or profitability
An Economic Unit	State of supra-normal economic rent, return per unit of resource	Contribution to the economic welfare or resource allocation
Distribution Channel Unit	Unit's contribution to system profits, efficiency, or costs	Comparative systems analysis, retailers role in alternative systems performance
Strategic Business Unit in a Firm's Portfolio	Contribution to the corporate profits, cash flow, resource use and/or supply	Input-output study of resource use and allocation at the national level
SOCIO-POLITICAL ENTITY		
Unit in Itself	Intragroup interactions, quality of worklife, contribution or role of the unit to work group and aspirations	Sectoral studies of quality of worklife in service economy societal satisfaction with different retail formats
Unit as a Channel Member	Role of the unit in power, conflict or cooperation in the system	Distribution of the sectoral power or influence on the resource allocation
Unit in the Social and Political Environment	Contribution to the community welfare or promotion of local causes, participation in local affairs	Contribution to the social welfare, or the effectiveness in lobbying, impact on legislation

socio-political entity. The conceptualization of retail unit as an economic entity emphasizes the activities and outcome of activities directed towards the production of outputs, value and wealth. The socio-political conceptualization, on the other hand, stresses the activities or patterns of behavior directed towards the generation of social welfare, and the effects or outcomes of the distribution and use of power and influence. Furthermore, within each perspective, the retail entity may be viewed either as an independent unit in itself or as part of a larger "system" such as a distribution channel.

Clearly, neither the micro-macro distinction nor the economic vs. socio-political perspectives are mutually exclusive. Micro units, taken together, form macro entities, and in either case the unit of analysis exists, simultaneously, as a complex economic, socio-political entity. It is necessary, however, to conceptually isolate the way we view the phenomena in order to conduct any meaningful research. Furthermore, such a delineation of perspective and level of analysis has the added benefit of bringing into a tighter focus, the primary performance dimensions that are most relevant and, hence, guide one in identifying the factors that may influence each dimension.

In order to better orient the reader, several previous studies of retailing performance have been

classified into various cells in Exhibit 2. A majority of the previous retail performance research seems to fall within the economic entity view at a micro level of analysis. On the other hand, both the macro and micro level retailing performance research with a view of the unit as a socio-political entity have been relatively unexplored in the literature.

Within this classificatory schema, then, the scope of the present investigation may be characterized as a micromarketing study where the view of the retail store is one of economic entity. The performance dimension of primary interest is the economic results of the operations of such entities.

EXHIBIT 2

A Classification Of Previous Retailing Performance Research

Perspective on The Unit	Perspective on Level of Analysis: Micro	Macro
ECONOMIC ENTITY		
An Independent Business Unit	Clawson (1974) Cottrell (1973) Applebaum (1965) Bass (1956,1958) Hansen and Weinberg (1979) Dalrymple (1966)	Hall et al (1961) Schwartzman (1971) Barger (1955) Bucklin (1977) Fuchs (1968) McCammon and Hammer (1974)
An Economic Unit	Holdren (1960) Arndt (1977) Kinney (1969) Alderson (1965)	Bucklin (1978a) Ingene (1982) Lusch and Ingene (1980b)
Distribution Channel Unit	Etgar (1976) Page (1979) Porter (1976)	Porter (1976)
Strategic Business Unit in a Firm's Portfolio	Buzzell and Dew (1980) Kinney (1969) Kerin and Miller (1981)	Fuchs (1968) Kendrick (1971)
SOCIO-POLITICAL ENTITY		
Unit in Itself	Lusch and Serpkenci (1984)	Hirschman and Stampfl (1980a)
Unit as a Channel Member	Etgar (1976) Lusch (1976)	Assael (1968)
Unit in the Social Environment	--	Hirschman (1981) Palamountain (1955)

The Paradigm Of Research

The space limitations in our academic journals and other constraints in our professional communications all too often preclude us from stating how we view the natural and social phenomena around us. In studies such as this thesis, however, where the writer is not bound with such constraints, it is appropriate, if not essential, that the paradigm adopted in research is made explicit.

The Concept Of A Paradigm

The concept of paradigm and its meaning and role in scientific inquiry has been a subject of vigorous debate in the philosophy and history of science literatures (Kuhn 1970,1971, Shapere 1964, Lakatos and Musgrave 1970, Zaltman et al 1982). The purpose here, of course, is not to discuss the various definitions of the term or to pursue the implications of each definition for scientific research. The discussion here is limited to a brief description of the term "paradigm" and to an explication of one such paradigm, as a prelude to a discussion of the major assumptions made in this investigation.

In the course of daily contact with physical, economic and social phenomena, we all make constant observations and acquire what may loosely be termed "facts."

These "facts," however, become significantly reorganized in the course of an initiation to a (scientific) community. Thus, we all acquire a constellation of beliefs, values, shared commitments and rules, in short, a world view of nature which importantly shapes our research (Kuhn 1970, Zaltman et al 1982). Organization of such elements, in time, provide us with what are variously described as "maps," "frames of reference," "models" or "patterns" with which we approach particular problems, develop theories, and sense, collect and interpret our observations (Zaltman 1982, p.121). To the extent that such world views come to be shared by a large number of investigators in a given community, disciplines acquire their dominant paradigms. Thus, intrinsically circular:

> a paradigm is what the members of scientific community share and; conversely, a scientific community consists of men/women who share a paradigm (Kuhn 1970, p.176).

More specifically, a paradigm refers to:

> an accepted model, a frame of reference or a world view through which we choose to look at nature, to physical, social or economic phenomena and from which springs through time, a coherent tradition of scientific research (adopted from Kuhn 1970 and Zaltman et al 1982).

Paradigms In Marketing

The long-standing traditions of inquiry in the natural sciences are all too often touted as the only disciplines with universal paradigms. Kuhn (1970), for example, quips that

> it remains an open question what parts of social science have yet acquired paradigms at all (p.15).

This notion is partly due to a misconstrued equivalence of paradigms with the existence of universal laws or theories.[36] Although the existence or acquisition of such universal world views are commonly associated with the degree of "maturity" in a scientific discipline, paradigms are present in any discipline, although with various degrees of acceptance at any given point in time (Kuhn 1970, p.79).

Although not reaching the level of generality or universality in acceptance found in natural science, social science in general, and the marketing discipline in particular, are rich in paradigms. Bagozzi (1980b), for example, presents "four generic paradigms" of social science, in Stimulus-Response (SR), Stimulus-Organism-Response (SOR), Organism-Response (OR), and Response-Response (RR) which have significantly shaped behavioral research in and out of marketing. Much of the

---

[36] In this respect, the view that the central theme of social science, i.e. human behavior and action, "can never be predicted with certainty" (Valle 1981, p.433), is an equally damaging claim.

consumer behavior literature, including the major theories of consumer behavior are direct outgrowths of such paradigms. Zaltman et al (1982), on the other hand, liken "the shift to a broadened concept of marketing to include both profit and nonprofit agencies and a view of marketing as an exchange or transaction system to... an extreme change in mapping... akin to Kuhn's paradigm shift" (p.124-5). A recent essay by Stern and Reve (1980) on distribution channels as Political Economies is yet another illustration of the existence, development, role, and significance of paradigms in the marketing field.[37]

Paradigm-In-Use In Retailing

Given the status quo in the marketing discipline, the next logical question is whether or not we have paradigms in the field of retailing? and if so, Where do we find them? Kuhn (1970) suggests that:

> close historical investigation of a given specialty at a given point in time discloses a set of recurrent and quasi-standard illustration of various theories in their conceptual, observational and instrumental applications... These are the community's paradigms, revealed in its textbooks, lectures... and so forth (p.43).

---

[37] For an application of this paradigm in theory construction, see, Lusch and Serpkenci (1982) and Arndt (1983).

A sample of the textbooks in the field of retailing reveals that there is indeed a strong communality in their basic orientation to the retailing phenomena (cf., Lusch 1982, Mason and Meyer 1981, Rosenbloom 1981, Duncan and Hollander 1977). In general, all writers view retail institutions as complex economic, socio-political organisms, which exist in constant interaction with, and in response to, various environmental stimuli (competitors, consumers, technology, social and economic events) through a variety of tactical, operational or strategic actions and in various structural or institutional forms. This is, in essence, the world view or the paradigm that dominates the retailing field today. Although lacking the elegance of similar expressions in natural science, and in many respects common-sensical, this world view of retailing, is no less a paradigm than the characterization of natural phenomena in Newton's Principia and Opticks.[38]

The paradigm of research that guides this investigation is an extension of this general view of the retailing process. Popularly known as the Structure-Conduct-Performance (SCP) paradigm, this view is commonly associated with an applied branch of economics, industrial organization research. In its most essential aspects, this framework is also similar in nature to the

[38] It should be noted that paradigms are only "vehicles" for the development or establishment of "theories."

generic S-O-R paradigm in social science. Bain (1968) summarizes the general approach as follows:

> Casual observation, common sense judgement, and formal economic theory all suggest that there are two main sorts of determinants [of firm performance]. First, the organization or structure of a group of competing enterprises is widely thought to have a strong conditioning or determining influence on the performance of the group [and the firm]. Market structure, hence, provides a constraining and canalizing influence on enterprise activities and their results, i.e., variation in structure may lead to associated variation in performance. Second, the conduct of enterprise, embracing the practices, policies and devices which they employ in arriving at adjustments to the markets in which they participate likewise influences performance. Thus, we must look to the characteristics of market structure and conduct as probable primary determinants of enterprises' performance (p.3).

With this view as a general background, this investigation proceeds from the assumption that the performance of a retail unit is fundamentally due to the conduct and behavior of the unit in its adjustments to the elements of the market. In any given point in time, it is logically inconsistent to expect a "causal" loop or feedback from present performance to conduct.[39] Nonetheless, it may be argued that "expected" performance may be a causal factor in explaining the present behavior, akin to the permanent income hypothesis in economics, and hence, the possibility of a reverse ordering of causal schemeta. In this case, however, one would no longer refer to "performance" as

[39] Recall that, by definition, the notion of performance implies behavioral "outcomes."

outcomes, but "potential" outcomes.[40] Hence, given the definitional scheme adopted in this study, a one way, nonrecursive causal ordering of events is assumed.[41] Of course, given a sufficiently long time frame, the SCP paradigm does not preclude the possibility of a causal link from either Performance to Structure or from Conduct to Structure. These possibilities, however, are not explicitly modeled or tested in this research.

---

[40] This construct is not explicitly considered in the definitional scheme adopted in this study.

[41] A likely influence on the elements of unit conduct is also from "prior performance." In this regard, the reference is made to a "lagged endogenous" concept, which is not inconsistent with the assumptions made in the study.

CHAPTER III

CONCEPTUAL FOUNDATIONS AND PREVIOUS STUDIES OF RETAILING PERFORMANCE

Initial conception and development of marketing thought as a separate field of inquiry is frequently viewed as a reaction to and a departure from the abstract world view of economics. At the turn of the 19th century, a number of scholars opined that the deterministic nature of the classical theories of value, exchange, consumer and firm behavior were too constraining to account for the complexity and dynamism observed in the real world. Hence, as Bartels (1976) notes, a group of marketing students

> evolved a body of thought that, by its nature, scope and application set them apart from the economists... in studies that were more empirical than theoretical, more practical than abstract, and more descriptive than philosophical (p.9)

This departure from classical economic thinking, however, has neither been as smooth, nor as complete as Bartels seems to imply. In fact, Anderson (1982) observes that

> although marketing has rejected much of the philosophical methodology of economics, it has retained a significant portion of its ontology... in the profit maximization paradigm of neoclassical economic theory (p.20-21).

Implications of this development for research in marketing are numerous, some of which have been noted in the essay by Anderson (1982). One implication, however, is most

relevant in the context of this review and may best be summarized in the following passage from Kuhn (1970):

> In the absence of a paradigm[42] or some candidate for a paradigm, all of the facts that could possibly pertain to the development of a given discipline are likely to seem equally relevant. As a result, early fact gathering is a far more nearly random activity and is usually restricted to the wealth of data that lie ready to hand. But though this sort of fact collecting... is essential to the origin of many significant sciences... it also produces a morass (emphases added, p.15-16).

Indeed, when one looks at the previous studies of retailing performance, they collectively present a rather disjointed collage. This is due, in part, to the absence of a general framework which can accommodate the different orientations of the researchers. And, in part, it is due to the diversity in the level of analyses (i.e., retail sector, industry, firm or unit), and the variety in the purposes of research (i.e., prediction, description, explanation). The purpose of this chapter is to briefly review these "islands" of research, and to try to forge some links among these disparate research orientations.

---

[42] For a definition of a paradigm, see the section on Research Paradigm in this chapter.

Organization Of The Chapter

This chapter is in three major sections. In the first section, the conceptual and theoretical foundations of the studies in enterprise performance is reviewed, and the major streams of research that have emerged in the study of the firm are summarized. Next, the studies of marketing and retailing performance at both the macro and micro levels of analysis are discussed, and some of the empirical findings are presented. The chapter concludes with an examination of some of the more managerial studies of retail store performance.

Conceptual Foundations Of Studies In Enterprise Performance

It comes as no surprise to any student of business enterprise that there is no universal theory of the firm. No one discipline in the social science arena can claim to have a uniform, well-established body of thought which purports to describe all aspects of firm behavior and to explain the multitude of the dimensions of enterprise performance. The picture is generally bleaker when one makes a distinction among the manufacturing or producer enterprises on the one hand and the distribution or service enterprises on the other (Morgenstern 1972a,b).

It is outside the scope of this study to discuss in any significant detail the content of the various theories

of the firm and their implications for present research. Suffice it to say that the conceptual foundations of studies in enterprise performance ultimately rest with the neoclassical economic theories of the firm.[43]

A brief review of the origins of enterprise performance in economics is useful for several reasons. First, the scope of this study is limited in its view of retailing as an economic process and the retail unit as an economic entity. As such, an investigation into performance of retail stores has its roots ultimately in the economic models of the firm. Second, since the development of marketing thought began and evolved in a period when economics provided the most dominant paradigms for research, its influence on marketing students has been substantial (Bartels 1976, Sheth and Gardner 1982, Kirkpatrick 1982). Thus, for a proper appraisal of the previous studies of retailing performance, it is essential to be acquainted with this body of economic thought. Finally, the economic models

---

[43] The more recent behavioral theories (e.g., Baumol 1959, Baumol and Stewart 1971, Williamson 1967,1970, Cyert and March 1963, Simon 1959,1962) can be viewed as significant extensions of these economic theories where the separation of ownership and control and the attendant difficulties with the profit maximization principle as the sole motivator of firm or individual action have been modified to more closely represent reality (see, for example, Wildsmith 1973, Scherer 1980, and Anderson 1982 for reviews). The resource-dependency or constituency based model of the firm (e.g., Pfeffer and Salancik 1978, Williamson 1975, Anderson 1982), in turn, are further extensions of the behavioral theories.

of the firm have been a significant source of generalizations, deductions and hypotheses which have produced a number of research streams, and which as Bain (1968) notes

> has the same wish to understand why enterprises perform as they do; and in particular, why some perform differently, or better or worse than others (p.3).

The Market System Concept-- Origins Of Studies In Enterprise Performance

Any economic system must solve, in some fundamental way, the problems of production and allocation of goods and resources (Silberberg 1978, p.324). Thus, in all economic systems, there have evolved several mechanisms or approaches in determining what goods and services need to be produced, how much of each to produce, and how scarce resources are to be allocated to each use. Furthermore, alternative mechanisms exist as to how the values and spoils created in this process are to be divided and distributed among the system participants (Moyer 1972, Scherer 1980). Although a number of such alternative mechanisms can be found in any economic system (e.g., redistribution, reciprocity, tradition, central planning etc.) one approach, the market system, has been the most intensely studied in contemporary economics (Bohannon and Dalton 1962, Moyer 1972). Within the market system, as Scherer (1980) notes

> consumers and producers act in response to price signals generated by the interplay of supply and demand forces, in more or less freely operating markets, with each participant seeking to make the best of the market conditions, i.e., by maximizing profit or subjective utility (p.1)

To be sure, no economic system can be found where such a market mechanism exists in its conceptually pure form (Moyer 1972). Furthermore, profit and utility maximization assumptions on the part of the economic actors have been intensely challenged in various disciplines (Scherer 1980, Anderson 1982). However, although the "realism" of the market system has been under severe criticism in social science, it has nevertheless remained as the primary driving force in theory development.[44]

The emphasis on market system, both to its proponents and its critics, however, is not for its own sake. The ultimate concern to the economist and to the social scientist is somewhat normative in content. In other words, the discussion on the market system, in the final analysis, centers around an assessment as to how "satisfactory" a job it does in helping solve the fundamental problems in production and allocation of goods and resources, i.e., the performance of the economy.

---

[44] These criticims on the validity of the market system as a viable approach in the determination of the fundemental economic questions are not our primary concern here. For an extensive discussion of the issues involved, the reader is referrred to a seminal piece by Morgenstern (1972b).

Two related branches in the economics discipline approach this question with quite disparate orientations in both methodology and theory. One branch, comparative economics, looks at the market system as one alternative market mechanism and compares the actual performance of it with other mechanisms' performance. The level of analysis is usually, but not always, macro and the method of analysis is predominantly inductive. In overall orientation, for instance, several studies in the marketing literature have this general character (e.g., Bucklin 1978b, Takeuchi and Bucklin 1977, Hall et al 1961).

Another branch of economics, the field of welfare economics, proceeds from a set of mormative performance standards for the market system (such as the presence or attaintment of full-employment, price stability, equity in income distribution and resource allocation etc.), and compares the actual performance of the system against the "ideals" of the same. More importantly,

> since the economy wide performance is viewed as emerging from the independent actions of many private enterprises... how well the economy performs, ultimately, depend on the performance of business firms (Bain 1968, p.9).

At the level of the overall economy such investigations are known as general equilibrium analysis and at the level of the firm or industry, are called partial equilibrium analysis. A number of studies in the marketing field can

also be characterized in this spirit (e.g., Barger 1955, Fuchs 1968, McCammon and Hammer 1974, McCammon and Bates 1976).

In summary, and admittedly much simplified, it is clear that the conceptual foundations of the general area of inquiry into enterprise performance has evolved in economics, principally in the pursuit of understanding the microcosm's performance as a vehicle to explain the performance of the overall economy. With the market system as the primary causal mechanism guiding the behavior of economic actors, studies on enterprise performance can thus be viewed as a continuation of a general orientation that dates back to Adam Smith and other early classical economists.

Major Streams Of Research In Enterprise Performance

Against the general backdrop of the market system concept, three major streams of research have evolved in the study of enterprise performance. The first stream, known as industrial organization studies is a direct outgrowth of the efforts of a group of applied economists in attempting to confront the notions associated with price theory by using empirical and statistical evidence from the real world. Starting from a set of normative performance goals for the overall economy and its constituent element, the business

firm, the field of industrial organization economics seeks to assess the influence of a number of variables on the economic performance of enterprises. Stern and Grabner (1970) summarize the basic approach as follows:

> The study of industrial organization centers around three variables: market structure, market conduct, and market performance.
>
> Market structure refers to the organizational characteristics of a given market. Market structure is usually expressed in terms of (1) some measure of concentration of the total assets or sales of all firms in an industry controlled by a stated number of its largest members; (2) the analysis of the "barriers of entry" confronting potential new competitors in an industry; and (3) the amount of differentiation existing among similar products competing for the same market.
>
> Market conduct refers to the actual commercial behavior of the firms competing in an industry. The most commonly accepted line of reasoning is that the structure existing in an industry strongly influences the conduct observed in that industry.
>
> Market performance refers to how well a particular industry has served society in terms of its allocative and technical efficiency, its innovativeness and progressiveness, and so on. Efforts to measure industry performance are, in effect, attempts to measure the net contribution of an industry to the "social welfare." A priori reasoning suggests that performance is the outcome of the interaction between structure and conduct (p.8-9).

Historically, a significant portion of the industrial organization studies have centered around a limited number of hypotheses, derived from the neoclassical theory of the firm. These research hypotheses are summarized in a path analytic framework in Exhibit 3.

Of these hypotheses, the set of relationships among the elements of market structure and technical efficiency (i.e., the links $\beta 31$, $\gamma 11 * \beta 31$, and $\gamma 12 * \beta 31$ on Exhibit 3) are relatively unexplored empirically. The core of industrial organization research has, and in large part, remains to be focused on the relationships between the elements of market structure and allocative efficiency (i.e., excesses of revenues over costs) of enterprises.[45]

Although much disputed, results of the empirical research reported over the past several decades give general support to each of the linkages ($\beta 42 * \gamma 23$, $\beta 42 * \gamma 22$, $\beta 42 * \gamma 21$). In other words, the higher level of seller concentration, entry barriers, and product differentiation, singularly and collectively seem to be strongly associated with higher levels of profitability in a diverse set of industries.[46]

Although the distributive sector of the economy, and especially the retailing enterprises, conform most closely to the assumptions of a theoretical industry, there has been no significant research in this sector of the economy. Bain (1968) attributes this lack of research to an absence of

---

[45] Bain (1968) and Scherer (1980) give good summaries of the empirical literature prior to the time of publication of their respective texts (see, also, Mann 1966, Collins and Preston 1968, Weiss 1971,1974, and Vernon 1972).

[46] The criticisms of industrial organization studies and/or empirical findings are summarized in Scherer (1980), Bock (1972). In the marketing literature, see, Bass, Cattin and Wittink (1977,1978).

EXHIBIT 3

A Path Analytic Schemata Of Research Hypotheses In Industrial Organization Studies

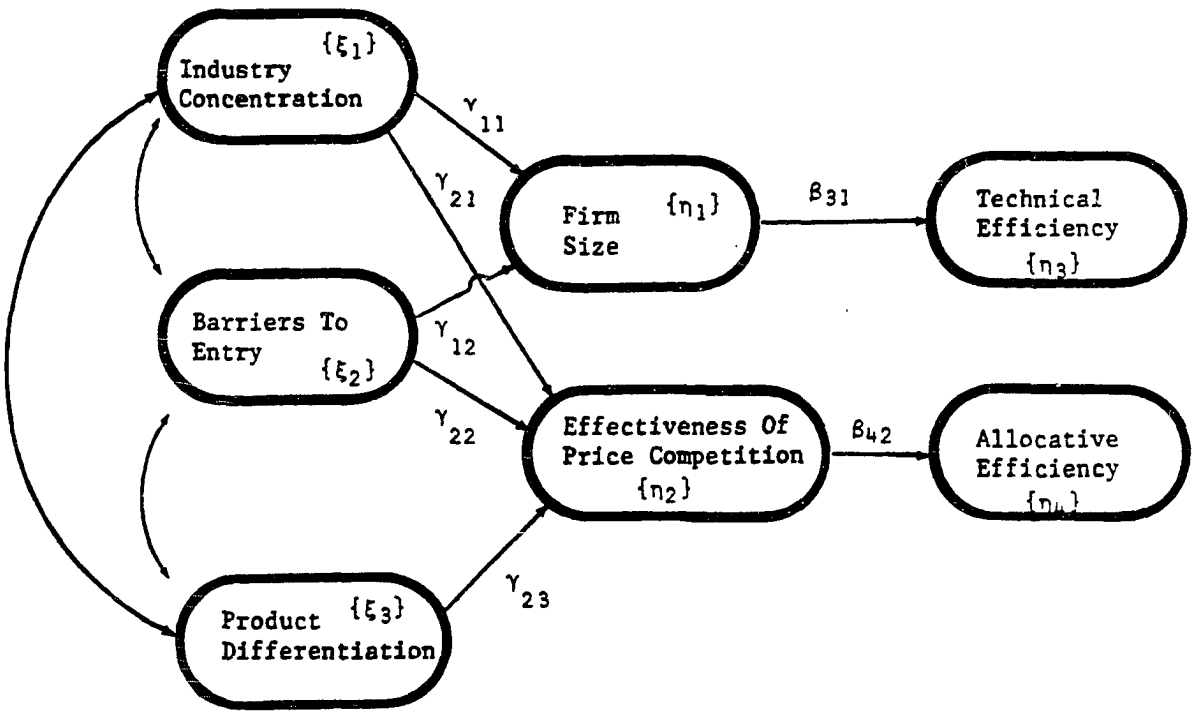

"systematic data... in distributive and service trades" (p.469). However, part of the reason here also lies in the difficulties in transplanting the concepts associated with manufacturing enterprises to service enterprises.[47]

The second stream which may be labelled as the Harvard Studies in Strategy-Structure-Performance have also evolved in roughly the same period as industrial organization research. In general, the Harvard studies in enterprise performance share the same basic goal of industrial organization research. In both research streams, the overall purpose is one of understanding the determinant conditions of firm performance. However, despite the similarity in semantic terminology; the research paradigms, definitions and the methodological orientation of these studies have significant differences.

The genesis of Harvard studies lie in the study of individual companies or "cases" as opposed to price theory of industrial organization research. Hence, whereas industrial organization research is "deductive" (deriving its propositions and hypotheses from micro-economic theory), Harvard studies are on the other extreme, using an "inductive" methodological orientation based on historical data gathering and analyses.

---

[47] See Scherer (1980, Chapter 9) for several exceptions in studies of the banking enterprises.

The overall research paradigm of the two streams also have significant differences. Whereas industrial organization studies predominantly relate the structural conditions of "market" organization to economic performance, Harvard studies seek to relate the structural conditions of the "organizational unit" and its strategy to performance. In this respect the term structure, which is common to both streams of research, defines a completely different phenomenon.

A crucial difference in these two streams arise in the role of the structure of the market in effecting firm performance. Whereas industrial organization research assumes a direct link from market organization to firm performance, Harvard studies see an indirect link through firm strategy. Rumelt (1974) summarizes this position as follows:

> Although most of the difference in financial performance among firms can... be attributed to a strong association between a firm's industry and its strategy, the association is so strong that it is virtually impossible to separate their relative effects... therefore [strategy] can not be viewed simply as a result of management action, but must be seen as bound up with the technological, economic and competitive characteristics of the industry of which the firm is a part (p.79).

In Exhibit 4, a simplified path analytic schemata is presented to illustrate the general thrust of the Harvard studies. A good example of the research in this stream can

EXHIBIT 4

A Path Analytic Schemata Of Harvard Studies On Enterprise Performance

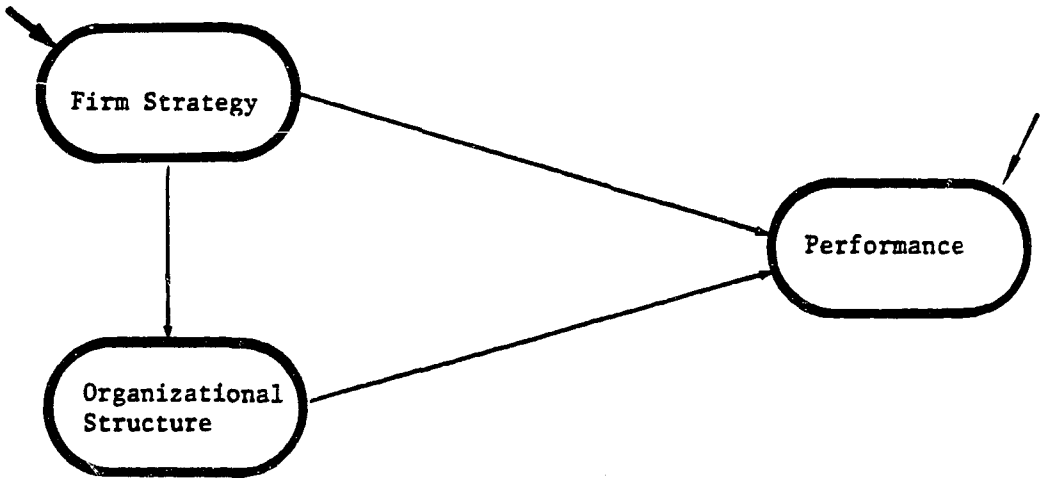

be found in the study by Rumelt[48](1974).

The third stream of research in the study of enterprise performance is the Profit Impact of Market Strategies (PIMS). Although the impact of PIMS studies has been relatively recent, the genesis of these studies date back to to an internal research program of the General Electric Company undertaken in the 1960's (Schoeffler et al 1974). The PIMS studies are designed to answer two basic questions:

1. What factors influence profitability in a business--and how much?, and
2. How does ROI change in response to changes in strategy and in market conditions? (Schoeffler et al 1974, p.139).

---

[48] Combining archieval research with financial data from COMPUSTAT reports, Rumelt investigated the financial performance of firms belonging to different strategic (i.e., diversified vs. undiversified) and organizational (i.e., functional vs. divisional) categories. He found that firms that were diversified by building upon a key internal resource have significantly higher financial performance (i.e., return on investment, sales and earnings growth and variability etc.) than those firms with diversification strategies that were not based on such resources. Furthermore, firms with product-division structures were found to have significantly higher levels of financial performance compared to those with other types of organizational forms. For similar studies on other countries, see, Channon's (1973) study of the British Enterprises, Dyas's (1972) study of the French Industrial Experience, Pavan's (1972) study of the Italian Enterprises, and Thanheiser's (1972) work on the German industrial firms, all of Harvard Business School.

EXHIBIT 5

A Path Analytic Schemata Of PIMS Studies On Business Performance

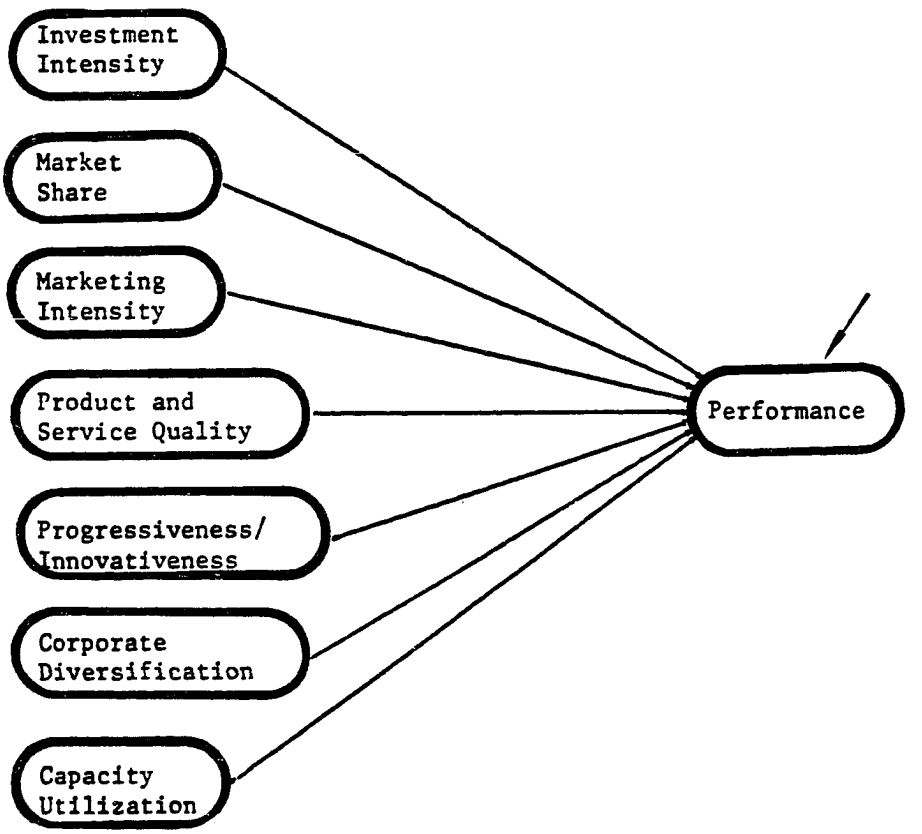

To answer these questions, PIMS researchers have sought to build a series of regression models based, in part on economic theory, and in part "on the opinions and beliefs of experienced executives" (Schoeffler et al 1974). Although a number of reports by the researchers associated with the PIMS project are available, the statistical models used in their analyses have remained confidential.[49] Exhibit 5 illustrates the general orientation of these studies and presents some of the key determinants of firm performance found in this research programme.

An Evaluation Of Research Streams In Enterprise Performance

Investigators in all these research programmes have shown a curious ambivalence towards the study of the service sector, and especially, retail enterprises. On closer inspection, the reasons for this neglect are not difficult to find. Most of these probably lie in one or more of the following:

1. Until recently, the greater perceived importance of the manufacturing sector in the U.S. economy,
2. The lingering belief of some economists in the unproductive nature of distributive instutions,

---

[49] See, for example, Schoeffler et al (1974), Schoeffler (1977), Buzzell et al (1975), Gale (1975), Branch (1978), and Buzzell and Wiersama (1981).

3. The difficulties in conceptualizing and measuring the service outputs,

4. The difficulty in obtaining empirical data due to the local nature of retailing and service operations, and the diversity of the enterprises in the industry, and

5. The large role of nonprofit organizations in the service sector and the absence of a theoretical framework in analyzing their behavior.

However, despite this ambivalence, and a combination of difficult conceptual problems, biases, and inadequate statistical coverage, over the years, a body of literature has evolved in the study of retailing performance. Beginning with a historical overview of the sectoral studies of retailing performance, a selective review of these studies is presented in the next two sections.

Macroretailing Performance Studies

Over the last three decades, two overlapping research streams have investigated the determinants of retail productivity and growth in economics and marketing. The first research stream has utilized a time-series approach, and has generally been more exploratory and descriptive in its orientation. The second stream, on the other hand, has sought to establish "explanatory" links between various market factors and retail productivity, using a cross-sectional approach. A number of studies that

were undertaken by a group of economists associated with the National Bureau of Economic Research (NBER) are illustrative of the first research stream.

Longitudinal Studies Of Retailing Performance

The first major study conducted by Barger (1955) for the NBER was an extensive research on the productivity trends in the distributive sector of the U.S. economy. Although Barger's work was primarily intended toward compiling a comprehensive data base on distributive trades, it is often credited as the pioneering study of productivity in retailing. The major conclusion of the Barger study, which set the stage for a number of others, was that productivity growth (i.e., output growth per person) in the retail sector was significantly lower than it was for mining, manufacturing, and agricultural sectors of the economy. Barger attributed the low level of productivity gains in retailing to:

1. The relatively slow adoption of technological innovations in distribution,
2. A steady increase in the fraction of labor force engaged in commodity distribution; and
3. A relatively large reduction in the weekly hours per employee in this sector.

Two extensions of Barger's study were undertaken by Kendrick, the first published in 1961, covering the period from 1929 to 1949, and the second study published in 1973, extending the research to the postwar years of 1948-1968. In both of these investigations, the purpose of the research was "to trace the productivity story for the U.S. economy and its major divisions," and the interest in the retailing sector was incidental to the general aim of the study. Nonetheless, the results from Kendrick's studies led to a significant revision of the productivity trends reported in Barger's work. Bucklin (1978b) notes

> A comparison between the trade and production sectors [due to Kendrick] now reveals the former to be in a vastly improved position relative to [Barger's] early estimates... while the trade sector continues to lag behind developments in agriculture and mining, its gains are now comparable to those achieved in manufacturing (p.52).

Several "causal" factors believed to influence the rate of productivity change in manufacturing was also undertaken by Kendrick.[50] However, the analyses on 21 manufacturing industries were not extended to the distributive trades.

---

[50] Specifically, the rate of change in total factor productivity (i.e., ratio of value added to weighted averages of man-hours and tangible capital assets) was regressed on a number of "causal" factors (e.g., rate of change in output, real capital, education levels of employees, ratio of R&D to sales, average work hours, concentration ratio, rate of change in concentration, unionization). Of these variables, only two, the rate of output change (as an indicator of scale efficiency) and unionization, were found to be significant. (Kendrick 1973, p.132-143).

Two other studies undertaken by Fuchs (1968) and Schwartzman (1971) for the NBER more specifically dealt with the productivity of service and retailing industries. In both of these studies the basic findings of the earlier research (i.e., low productivity gains) were reiterated. Fuchs (1968) attributed the differentials observed to: (a) the decline in the hours worked, (b) the lower quality of the labor force, and (c) the relatively low level of capital investment per person in retailing, much in line with Barger's conclusions. Schwartzman (1971), on the other hand, concluded that the primary source of low productivity gains in retail trade was the declining service level per transaction. This was attributed to the growing incidence of self-service in retail operations. A number of other investigations conducted independently from the NBER confirmed the main conclusions of these prior studies[51] (e.g., George and Ward 1973, Beckman and Buzzell 1958, Ruttan 1964, Konopa 1968, Waldorf 1971, McCammon and Hammer 1974).

Several common characteristics of the studies in this research stream can be noted. First, with few exceptions (e.g., Kendrick 1961,1973), in all of these studies the term productivity was frequently used synonymous with labor productivity. This was partly due to the ready

[51] For a recent example of the longitudinal research, see, Lusch and Serpkenci (1983).

availability of data on the labor resource, and partly to the intensity of labor use in the retail trade. Second, although there was relatively close agreement on the conceptual definition of the productivity notion, the studies in this stream were quite diverse in their operationalizations of either of its components (i.e., outputs and labor input). It is not, therefore, surprising that each study has found a different point estimate for the rate of change in labor productivity.[52] Finally, although most of these investigators advanced similar "explanations" for the low levels of productivity growth, given the exploratory nature ot their studies, they generally did not explicitly state or test any a priori hypotheses.[53]

Cross-Sectional Studies Of Retailing Performance

The second stream of macroretailing research has investigated the influence of market forces on retail productivity cross-sectionally. Probably the first and most comprehensive of these studies was the investigation by Hall et al (1961). These authors, noting that

---

[52] Part of the reason here also lies in the diversity of the data sources used by different researchers (Bucklin 1978b). Nonetheless, all of the studies were unanimous in their main conclusion (i.e., a relatively low productivity growth in the retail trade).

[53] George and Ward (1973) and Schwartzman (1971) are exceptions.

> there exists, at present, no articulate and empirically documented theory either of the determinants of productivity in distribution or of how the structural features, associated with variations in production, such as numbers of shops, size of shops or [their] organization or the type of operations come about (p.5)

undertook an extensive study, comparing the structure and productivity of the retail and service trades in Great Britain, Canada and the U.S. The major aim of research was to compare the level of productivity and the structure of the retail trade in the three countries, and to develop a conceptual framework to account for the possible differences.

Using the Census of Business reports for the three countries for comparable years, Hall et al found significant differences in the market structure (i.e., number of shops, shops per population, average sales per shop), outlet operating modes and organization (i.e., stockturns, types of merchandise sold, chain vs. independent stores), and retail productivity (i.e., sales per employee). In their evaluation of the possible reasons for the observed differences, the authors proposed a number of "causal" factors and a series of mechanisms through which they impact retailing productivity. These primary determinants were operationalized in per capita income, population density, the rate of population growth and the age of settlement of the region or trade area. However, As Hall et al (1961) noted

> although emphasis has been placed on these particular variables... they may... themselves be indicating the effect of other variables [which are] not explicitly included [in the proposed framework] .... therefore, it is important to give hypotheses on the whole chain of causes of which these variables [may] form a part (p.134).

The "Modus Operandi" of these four "cause" variables[54] and the hypotheses that were advanced by Hall et al have had a profound influence on later empirical research. Two of the proposed causal schemata, the influence of per capita income and rate of population growth, are reproduced in Exhibits 6 and 7, and a brief description of each is given below.

According to Hall et al, the first major factor, per capita income, influenced retail labor productivity through two interrelated mechanisms: the scale of the market and changing shopping patterns; and changes in the industry structure and in the pattern of labor use (see, Exhibit 6). For the first mechanism, which dealt with the changes induced by demand related factors, Hall et al (1961) noted that:[55]

---

[54] Modus Operandi here and elsewhere is used to imply the "manner" or the "mechanism" through which one variable impacts another variable.

[55] Another factor proposed by Hall et al, population density, also impacts retail productivity through the scale and structure of the trade. With increasing population density, it is argued, the business potential within the trade area is expected to expand. This encourages more retailers to enter the market and will lead to increased competitive intensity, forcing retailers to upgrade their stores. These developments,

> Higher per capita income in general, raises expenditure [marked A in Exhibit &ch34] in any particular trade... In the short run, this must give rise to an increase in custom (J) for the existing shops so that their average sales-size (K) must rise. In the longer run, whether the average [sales] size rises... depends on [the number of new] shops... attracted into the trade.
>
> The higher mobility of wealthier customers afforded by higher incomes (B) would tend to favour the chains (O), as those who travel afield to shop (I) tend to favour a store with a known name... In this way market imperfection (P) is reduced by [both] greater mobility... and the [increased] extent of the market for chains. As the chains are [generally] much larger than the independents, rising income would, in this way tend to increase the average scale of operation for all stores (K and O) (p.134).

As to the second mechanism, which concerned the market organization and resource use in the retail industry, Hall et al (1961) argued that:

> a powerful influence on the number of independents... are supply factors (C,D, and E). The supply price of management (D) reflects the relative demand of other sectors on management... and also the alternative jobs open to people who would otherwise set up shop.
>
> Where labor is costly (E), the incentive to introduce labour-saving devices (M) and arrangements is greater... Perhaps equally important in retailing, is the increased incentive to management provided by high wages to make the best use of labour that is employed (L). The former effect, involving as it does the use of finance for investment, will be made easier in so far as capital is more readily available in wealthier areas (F) (p.135).

---

as in the case of high per capita income, similarly enhances labor productivity in the trade.

EXHIBIT 6

A Causal Schemata Of The Effects Of Per Capita Income On Retail Labor Productivity

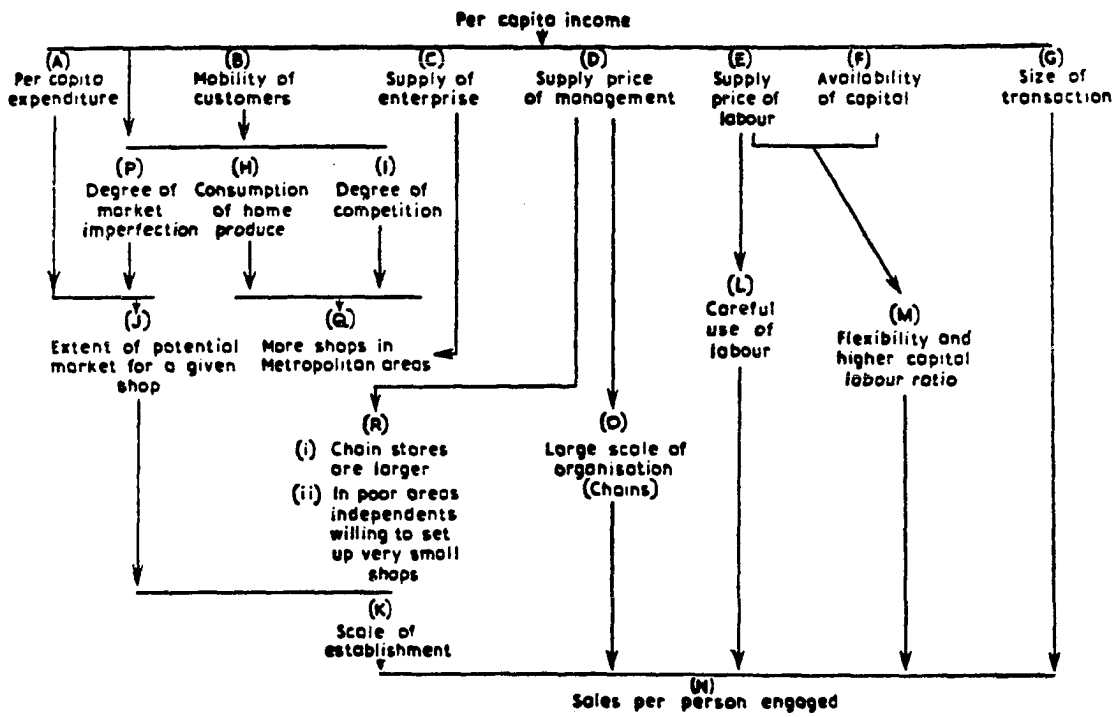

Source: Hall, Margaret, et al (1961), Distribution in Great Britain and North America-A Study in Structure and Productivity, London: Oxford University Press.

According to Hall et al (1961), the rate of population growth also "afffects retail structure and productivity both from the demand side, by way of inducement to invest, and also from the supply side, by the availability of sites for new and conveniently laid-out shops" (p.137). As the authors noted (see, Exhibit 7):

> Conditions of expansion [due to rising population] are in many ways favourable to technical change. [Retailers] find their markets are expanding [marked F in Exhibit &ch36] simply because there are more people around (A) and are induced to innovate and expand (K), and not only inducement to investment is increased but the availability of capital is also increased (D), both by the accumulation of private means and undistributed profits (C), and, usually at any rate, by the improved credit facilities (E) that go with development.
>
> What is probably a very important feature is the fuller use of existing store capacity (I) in an expanding area, a result of the inevitable time-lag in adjusting capacity to expanding markets. Furthermore, the availability of sites (in areas of high growth) and less traditionalism (E) facilitates the growth of modern stores (O)... A higher rate of growth, ceteris paribus, would tend to raise the size of establishment (N) and increase sales per person by the improved lay-outs (O) associated with newer and better equipped shops (L) (p.137).

In the years following this investigation, a number of studies in both the U.S. and abroad were undertaken to empirically test some of the propositions advanced by Hall et al. In a study of retailers in British towns, George (1966) hypothesized that town size, per capita income (Y), tightness of labor market (T), the degree of chain store

EXHIBIT 7

A Causal Schemata Of The Effects Of Population Growth On Retail Labor Productivity

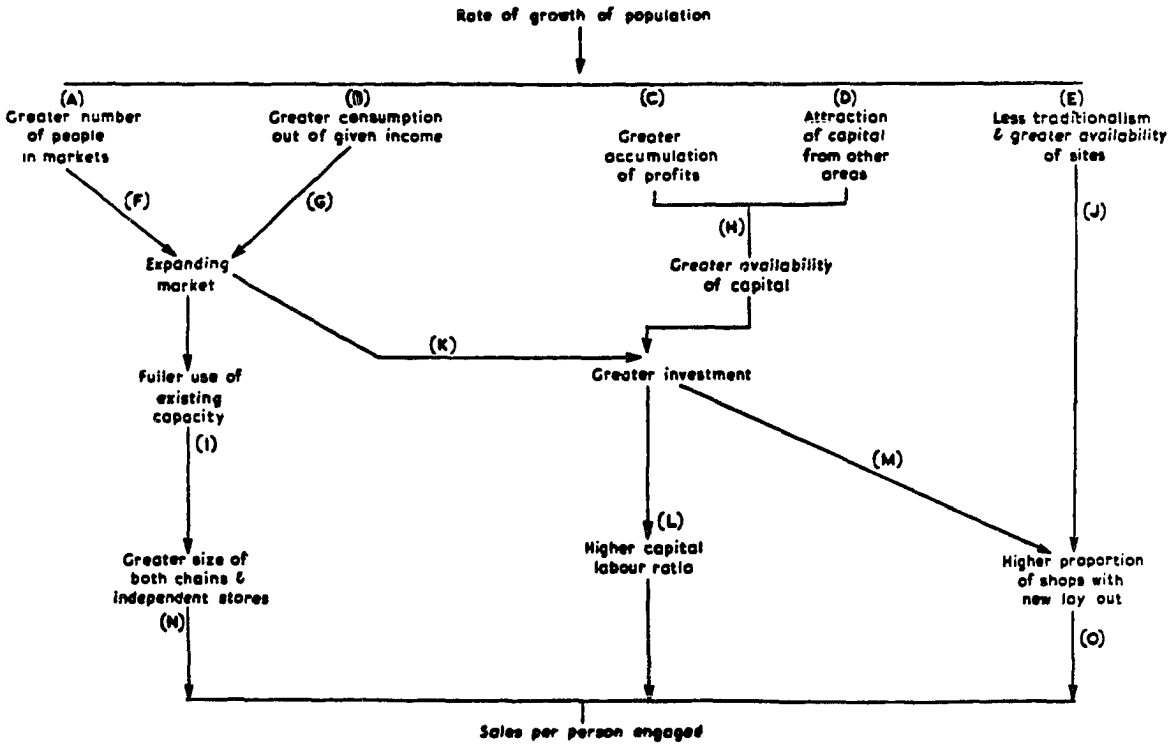

Source: Hall, Margaret, et al (1961), Distribution in Great Britain and North America-A Study in Structure and Productivity, London: Oxford University Press.

presence (C), and the average (sales) size of stores (S) were positively associated with labor productivity. Contrary to his initial expectation, no significant relation was found between productivity and size of town. George conjectured that since the towns of smallest size in his study averaged over 60,000 inhabitants, they were of already sufficient size to accomodate optimal store sizes. A linear regression of the remaining factors on labor productivity (i.e., weighted average sales per employee) accounted for 82 percent of the variance in productivity among the retail trades in 160 British towns.[56] For individual lines of trade, similar findings were found for grocery shops, but associations for clothing, footwear and general stores were insignificant (George 1966, p.40).

In a later study, George and Ward (1973) using similar data for 1966, extended the earlier research, investigating three interrelated questions. The key hypotheses in this research were:

1. Whether the long term upward trend in labor productivity reflects improved methods of selling, such as substitution of capital for labor (The Internal Efficiency Hypothesis), or

---

[56] The regression equation estimated in George (1966) was:

$$LP = 800+63.5T+.035S+12.5C+4.3Y$$

with all regression coefficients statisticaly significant at $p < .001$.

2. If it is due to short-run lags in labor supply in adjusting to higher levels of sales (Short-Term Lag Hypothesis), and

3. Whether the productivity gains in retailing is due to the concentration of sales brought about by the elimination of marginal shops (Sales Concentration Hypothesis).

Using both time series and cross-sectional analysis on a sample of the 50 largest towns in Great Britain, the authors found strong support for the short-term lag hypothesis. However, their statistical analyses also indicated the two hypotheses (Lag vs. Internal Efficiency) not to be mutually exclusive but complementary in the long-run. They argued, if the tightness of labor supply persisted into the long-term, then, the retail stores would be forced to introduce improved methods of sales which usually entailed substitution of capital for labor.

The sales concentration hypothesis which predicts greater sales per shop in the towns with the largest productivity gains was also supported. A regression analysis for 42 towns, relating productivity growth (ΔY) to changes in labor tightness (ΔL), sales per shop (ΔS), per capita income ($\Delta Y/H$), and the average household income (Y/H), indicated change in sales per shop to be the most important factor.[57]

[57] The regresssion equation estimated by George and Ward (1973) was:

A series of other studies, by Bucklin (1977,1978b) and by Takeuchi and Bucklin (1977) report the results of similar research efforts. These authors investigated some of the hypotheses advanced by Hall et al in the context of the U.S. and Japanese retail trades. In these studies, "major political units were employed as the observations--the mainland states of the U.S. for 1964 and 1968, and the fortytwo prefectures of Japan for 1963 and 1967" (Bucklin 1978b, p.75).

Bucklin (1978b) examined the impact of seven factors effecting productivity in retailing (i.e., deflated sales per employee). Six of these factors; i.e., role of scale in retailing, price of labor, per capita income, population density, population growth, and a dummy variable for time, were all expected to be positively associated with labor productivity. For a seventh factor, importance of department stores, no definitive hypothesis was advanced.

The results of a log-linear regression analysis from Bucklin (1978b) along with the operationalizations of each of the variables are reproduced in Exhibit 8. Generally, moderate to strong support was found for all factors, except for the population growth and time variable for the U.S. sample, and population growth and urban density for Japan.

$$\Delta Y = 19.5+2.89\Delta L+.167\Delta S+.379\Delta Y/H-.037Y/H$$

with all regression coefficients statistically significant at $p < .05$.

EXHIBIT 8

Results Of A Regression Analysis From Bucklin (1978b)

Predictor Variables	Operational Measure	Parameter Estimates Japan	U.S.
Scale of Operations	Stores per capita	-.53*	-.11*
Tightness of Labor Market	Trade Wages	.25*	.40*
Population Growth	Percentage Change in Population	.01	.00
Transaction Size	Income per capita	.65*	.07*
Competition	Urban Density	-.03*	-.00
Service Level	Proportion of (Sales) Department Stores	.02*	-.08*
Time	Dummy	-.06	.02*
Constant	--	2.33	-1.02
R^2		.96	.63

* $p < .05$ (one tail test)

The results of a similar analysis, based on the same data sources is summarized in another paper by Bucklin (1977). In this study, however, the dependent variable was real output (measured as deflated sales), and an additional independent variable, number of retail employees, was included in the regression model. As Bucklin (1977) noted

> this form of the model does not reflect productivity directly.., since no explicit output/input ratios are produced. However, the impact of changes in variable upon partial productivities can be readily discerned. For example, if the coefficient for per capita income is positive... the higher per capita will create a greater level of output when labor is held constant. Such development results, in effect, in a more efficient use of labor; productivity thereby has been improved (p.226).

Results from the regression analysis from Bucklin (1977) are reproduced in Exhibit 9. Bucklin attributed the near perfect fit of the regression equation for both samples to the close association between retail employment and retail sales. Otherwise, the results of this latter study reiterated the findings of Bucklin (1978b).

Takeuchi and Bucklin (1977), in an extension of these earlier studies, investigated the factors that may effect the retail structure (i.e., the number of stores per capita), which in turn, was posited to be a major influence on retail productivity. Although the primary interest in this work centered around estimating the influence of various environmental variables on the structure of retail

EXHIBIT 9

Results Of A Regression Analysis From Bucklin (1977)

Predictor Variables	Parameter Estimates U.S.	t-Score	Japan	t-Score	t-Score Difference
Constant	.30	2.8*	.14	3.0*	.8
Time Dummy	.01	3.7*	-.02	2.6*	3.7*
PRODUCTION FUNCTION:					
Employment	.99	210.4*	1.09	58.6*	-.5.8*
Establishment per capita	-.07	-1.9**	-.24	-2.1**	1.6
Trade Wages	.36	4.8*	.23	3.3*	1.0
Income per capita	.07	1.7**	.65	6.9*	-6.1*
Department Store Market Share	-.08	-4.6*	.04	2.7*	-4.1*
STRUCTURE:					
Urban density	.00	.4	-.04	-3.6*	3.9*
Population Growth	.18	3.8*	.17	1.7**	.1
Adjusted R^2	.99		.99		
Observations	96		92		

* $p < .01$
** $p < .10$

trade, an aspect of this study was rather untraditional. In this paper, the authors advanced a number of latent construct, such as "personal wealth," "the level of technology employed" and "degree of competitiveness," all hypothesized to impact another unobservable (i.e., the "structure in retail trade"). Hence, some of the traditional empirical concepts that had been used to test research hypotheses, for the first time in this study, were associated with more general, unobservable constructs. The single equation linear regression analysis used in the empirical tests of the hypotheses, however, was unjustified given the conceptual underpinnings of the proposed model.[58]

Recently, in a focused effort to integrate several prior approaches, Ingene (1981,1982,1983c), Ingene and Lusch (1980,1981) and Lusch and Ingene (1980b) have undertaken a number of studies investigating the retail productivity in the U.S. SMSAs.

In an essay outlining the conceptual framework for the subsequent mathematical and empirical analyses, Ingene (1981) distinguished between three interrelated conceptual models of productivity in retailing. The first of these conceptual models, according to Ingene, was an economic approach, which was largely based on the notions associated

---

[58] The reference here concerns the inability of traditional regression analyses to account for measurement errors.

with production functions.[59] In this conception, the outputs of a retail unit were typically viewed as the result of three interrelated factors: the technology of the retail unit, scale economies, and the degree of factor substitutability. Hence, according to the economic model of the retail firm, the level of productivity achieved was seen as a function of two fundamental questions of

1. how much to produce?, and
2. how to produce it?

Ingene argued that an answer to the first question generally lies in a firm's assessment of the expected level of demand, the degree of scale economies implicit in the production function, the costs of producing and holding inventories, and on the attitudes of the retailer toward risk. Given a desired level of output, then, the answer to the second question was one of deciding what amount and what combination of inputs to employ in the production (Ingene 1981, p.7). However, as Ingene noted

> [since] the economic view of productivity... is fundamentally a manufacturing [i.e., production] notion... it is predicated upon the possibility of output even in the absence of sales (p.8).

---

[59] For a sample of articles which deal with production functions and retail productivity, see, for example, Ingene (1983b), Bucklin (1983), Lusch and Ingene (1980a), White (1976), Mallen and Haberman (1975), Savitt (1975), Ofer (1974), Arndt and Olsen (1975), Bishop and Hughes (1967), Tilley and Hicks (1970). Bucklin (1978b) gives a limited review of these articles.

Because in a service establishment such as retailing no output occurs in the absence of an exchange or transaction, Ingene (1981) further argued that

> caution must be exercised in applying the economic approach to productivity analysis in the marketing sector of the economy (p.8).

According to Ingene (1981), the second conceptual model in productivity analysis, the behavioral approach, centered around "labor efficiency." Here, it was explicitly recognized that people, in contrast to automaton concept of human resource in economic approach,

> work with differing levels of efficiency... which is influenceable through both hiring practices and by employee treatment [and training] (p.8).

Thus, with a behavioral approach, the productivity of a retail unit primarily depended on the efficiency of labor, which in turn, was viewed as a function of the personal abilities, training, motivation of the labor, and their expectations of the pecuniary and psychological rewards.[60] According to this second model, then, the productivity of a retail unit was a function of not only the economic phenomenon of scale economies but it also depended on the behavioral phenomena implicit in the selection, training and maturation of the retail work force.

---

[60] Ingene (1981,1983c) did not explicitly define the concept of "labor efficiency" in his essays. It would appear, however, the concept implicitly refers to a number of innate or learned personality traits, which are posited to be factors which are instrumental in producing retailing services, i.e., outputs.

EXHIBIT 10

Marketing Approach To Productivity Analysis In Retailing

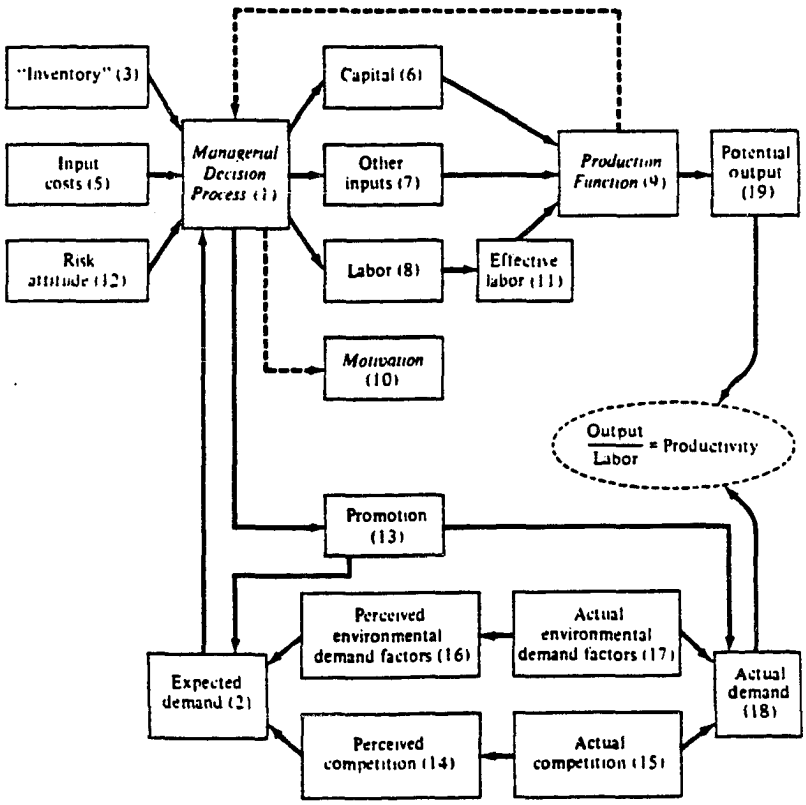

Source: Ingene, Charles A. (1983), "A Conceptual Model and Empirical Evidence of Labor Productivity in Department Stores," in Productivity and Efficiency in Distribution Systems, David A. Gautschi (Ed.), N.Y: North Holland.

A third conceptual model proposed by Ingene (1983c), labelled the marketing approach, is a synthesis of the two early approaches (see, Exhibit 10). According to Ingene, this new framework incorporated the key elements from both the internal paradigm (i.e., the behavioral approach), and the external paradigm (i.e., the economic approach). Ingene (1983c) described the new paradigm as follows:

> Internally, managerial decisions ((1) in Exhibit 10) are made on how to motivate (10) employees (8) to create effective employees (11). Managerial decisions about number of laborers (8), capital (6), and other inputs (7), in conjunction with motivation, combine in the production function (9) to create potential output (19).., (i.e.).., the value of output that an establishment is capable of producing in a given time span... Such factors as hours of operation, number of employees, merchandise on hand, and so forth affect potential output. However, in the absence of demand, this output remains potential because no exchange occurs... (Hence), managerial decisions (1) are made on the basis of the expected level of demand (2), relative input costs (5), the manager's risk attitude (12), and the amount of "inventory" on hand (p.80-81).
>
> The external paradigm is focused upon the relationship between the expected level of demand (2) and the actual level of demand (18). Expected demand is determined on the basis of two sets of factors (14). First, are the anticipated environmental factors (14)-- psychographic and demographic profiles of customers and environmental factors like the transportation network. Second are the perceived efforts of competitors (16). Of course, these factors are related to the actual environmental demand characteristics (15) and the actual effort by competitors (17). These actual factors interact in the minds of the consumers to create an actual level of demand (18) for the establishment's potential marketing output. An important influence on actual as well as expected demand is promotional effort (13) (p.82).

> Finally, marketing productivity is determined by the lesser of actual demand and potential output. That is, the marketing approach to productivity shows that the internal and the external paradigms of productivity are both important in ascertaining marketing output and therefore the level of productivity in marketing (p.82).

In two other studies, the first dealing with retail labor productivity (Lusch and Ingene 1980b), and the second on retail market structures (Ingene and Lusch 1981), the authors have developed a number of econometric models in an attempt to "axiomatize" some of the notions associated with Ingene's "marketing approach."

Starting with the standard assumptions of neoclassical economics,[61] and a mathematical definition for the demand and cost functions, Lusch and Ingene (1980b) derived a theoretical productivity function and examined its behavior by differentiating it with respect to a set of variables.[62] The theoretical propositions that were advanced by Lusch and Ingene (1980) which deal with productivity performance of retail units are reproduced in Exhibit 11.

---

[61] For example, profit and utility maximization for firms and consumers, a downward sloping, and identical linear demand curves for all households in the market, a circular trade area with stores in the locus, etc.

[62] Although there is overlap in the variables, the first study (Lusch and Ingene 1980b) dealt with retailing productivity, while the second study (Ingene and Lusch 1981) was primarily concerned with retail market structure.

EXHIBIT 11

Research Hypotheses Advanced By Lusch and Ingene (1980b)

P-1. As each employee in department store can serve more households labor productivity will rise.

P-2. As household transportation costs rise labor productivity will decline.

P-3. As the maximal demand price households are willing to pay for the composite commodity department stores sell labor productivity will rise.

P-4. As variable costs in department stores rise labor productivity will decline.

P-5. As density (households per square mile) increases labor productivity will rise.

P-6. As retail wages rise labor productivity will rise.

P-7. As retail wages in apparel stores rise relative to department stores then labor productivity in department stores will rise.

P-8. As competition (number of department stores per household) rises labor productivity will increase.

P-9. As the breadth of assortments in department stores increase and as amenities increase labor productivity will rise.

P-10. Rapid market growth will stimulate labor productivity.

Ingene attempted to empirically test some of these and other hypotheses for grocery retailing (Ingene 1982), and for department store retailing (Ingene 1983c). In both of these studies the data sources employed, and the major research questions posed by the author were almost identical. Hence, only the former study is reviewed here.

Ingene (1982) investigated the determinants of retail productivity (i.e., sales per employee), using data from various published reports at the level of the U.S. SMSA markets. The proposed determinant factors, their empirical definitions and the direction of hypothesized relations to retail labor productivity are reproduced in Exhibit 12. The results of a ridge regression analysis gave moderate to strong support to all of Ingene's hypotheses except for the variable population growth. Using the same methodology, data source, and variables, Ingene (1983c) reported similar findings for department store retailing.[63]

---

[63] In the latter study, "congestion," as an indicator of consumer mobility was found to have a positive association to labor productivity, contrary to the author's prior expectation.

EXHIBIT 12

Determinants Of Labor Productivity From Ingene (1982)

Name	Predicted Sign	Symbol	Definition	Source[a]
Capital intensity	+	(F/L)	total grocery store floor space in thousands of square feet in the SMSA divided by number of employees	CRT
Average store size	−	(F/N)	thousands of square feet of total grocery store floor space in the SMSA divided by number of stores	CRT
Retail space saturation	−	(F/POP)	thousands of square feet of total grocery store floor space in SMSA divided by SMSA population	CRT, SBP
Retail wage rate	+	(W)	annual wage rate in grocery stores	CRT
Population growth	+	(G)	percentage population growth in the SMSA, 1970–1972[b]	SBP
Labor efficiency/competitiveness	+	(NMPH)	number of "mom and pop" stores per 1,000 households	CRT, SBP
Income	+	(Y)	average household effective buying income (state and local taxes are excluded)	SBP
Household size	+	(POP/H)	SMSA population divided by number of households	SBP
Mobility (availability private transportation)	+	(M_1)	automobiles per household	MVR, SBP
Mobility (congestion)	−	(M_2)	automobiles per square mile	MVR, CCDB
Sales per employee		(S/L)	sales in grocery stores with payroll divided by number of paid employees	CRT

[a]SBP = "Survey of Buying Power" (*Sales and Marketing Management* 1973); MVR = "Motor Vehicle Registrations" (U.S. Department of Transportation 1973); CCDB = "County and City Data Book" (U.S. Department of Commerce 1972b); CRT = "Census of Retail Trade" (U.S. Department of Commerce 1972a).
[b]Some SMSAs had a negative G; therefore, G was transformed upward by .1 for every observation in order to be able to take logarithms. This affects the intercept value.

Variable	Beta	Standard Error	t-statistic
Intercept	.231	.024	9.51[a]
F/L	.156	.035	4.48[a]
F/N	−.059	.025	−2.40[a]
F/POP	−.076	.034	−2.22[b]
W	.690	.030	23.32[a]
G	.010	.014	0.70
NMPH	.038	.008	4.51[a]
Y	.186	.043	4.33[a]
POP/H	.181	.047	3.84[a]
M_1	.222	.036	6.15[a]
M_2	−.024	.006	−4.33[a]

$\bar{R}^2$ = .754; the coefficient values stabilize by K = 0.2.
F = 65.33; P < .001
d.f. = 199

[a]p < .01
[b]p < .025

An Evaluation Of Macroretailing Performance Studies

The macroretailing studies of retail performance reviewed in this section share a number of common characteristics. Some of these characteristics concern the general assumptions underlying these investigations, and hence, are more conceptual in nature. Others, however, have to do with the empirical analysis and the statistical inferences drawn from these studies, and hence, are methodological.

The macroretailing studies of retail performance have traditionally derived their major theoretical propositions and research hypotheses from the collective behavior patterns "attributed" to a group of retail stores and/or to the outcomes of their collective behavior. In this regard, for example, when tightness of labor supply is posited to influence retail productivity, the implicit assumption has generally been that all firms, in adjusting to such an environmental condition act in an identical manner (e.g., substitute capital for labor) and that the outcome of such actions (e.g., retail productivity) are similar for all stores. On common sense grounds alone, this probably may not be so. However, given the nature of empirical data sources employed in this stream (i.e., sectoral, or SMSA data sources), it is impossible to test the validity of such assumptions.

As it was indicated in the introduction to this research, macroretailing studies are also based on a faulty conception of the "retail industry." To the extent a retail industry exists only at the level of a limited geographical area, in many cases much "smaller" than even an SMSA, these studies are several stages removed from assessing the impact of market forces on "retail store" performance.

On the methodological side, the macroretailing studies are also defective. In all of these studies, the investigators have posited a number of factors such as market demand, mobility, congestion, competitive intensity, and so forth to have a significant impact on retailing performance. Few, if any, of these variables, however, are readily observable or measurable with a single indicator. Furthermore, in these studies whether the proposed influences of these variables are direct, indirect or both, have never been explicitly tested.

In part, these shortcomings are a direct result of the traditional statistical techniques used in this research stream (e.g., regression analyses). Single equation regression analyses are generally incapable of separating out such direct vs. indirect effects and/or controlling for the influence of intervening variables. More importantly, the strict assumption about errorless measurement in variables, given the nature of variables involved in most investigations, are simply not defensible.

A number of other methodological problems with these studies were noted by Ingene (1982). Following a review of the major research in this field, Ingene pointed to difficulties in making substantive inferences based on the regression coefficients. Acording to Ingene (1982), the problems could be attributed to four major reasons:[64]

> First, specific concepts have been measured with several variables, causing ambiguity as to the relative importance of each variable in contributing to the concepts. Second, each of the variables employed in the regression has proxied for several concepts, which leaves unanswered the question of the importance of each concept separately. Third, some authors have included sales on both sides of regression equation, thereby biasing the results. Fourth, there has often been a high degree of collinearity between the independent variables which can cause instability in regression coefficients. Not all of the works however possess all the weaknesses (p.80).

Some of these points raised by Ingene are followed up in a recent paper by Hughes and Serpkenci (forthcoming) and will be discussed in more detail in the next sections.

Despite these and other shortcomings, however, macroretailing performance studies have collectively identified a series of key concepts and variables which have significantly shaped research in this area. Further, studies by Hall et al, Bucklin, Ingene and Lusch and others have posited or introduced a number of mechanisms through which these concepts operate in influencing retailing

[64] Table 2 of Ingene's paper is illuminating in this regard (1982, p.80).

performance. Hence, although marred by methodological problems, these studies have nonetheless established the beginnings of a rich conceptual network for future research.

Microretailing Performance Studies

Whereas the major interest of macroretailing studies has been on retailing at some goegraphical or census aggregation, the general focus of microretailing performance is typically on the individual retail unit, and in some occasions, on the departments within a retail store. Because of this micro interest, the research in this stream has generally involved either costly primary data collection and/or proprietary studies done for individual retail firms. Therefore, it is not surprising that only a fraction of these studies have reached the forums of academic discourse. Despite this, however, a body of literature has evolved through the years which provides additional insights into the inquiry of retail store performance.

Aside from the level of analysis, a major difference between the micro and macroretailing studies involves the operational measures of economic performance utilized in research. In this regard, macroretailing investigations are predominantly oriented towards assessing retail productivity. The primary interest in most microretailing studies, however, is on the financial efficiency or

profitability of retail establishments. A number of earlier studies are illustrative in this regard.

In mid-1950's and 1960's, a number of scholars have attempted to uncover the factors which impact retail margins and expenses, and hence the profitability of retail units. In one of the earlier studies, for example, Bass (1956) undertook

> to derive quantitative estimates of the relationships of sales, location, store type and city size to expenses and gross margins for retail drug stores (p.236).

Using data from 1948 profit-and-loss statements for a sample of independent drug stores in the U.S., Bass hypothesized that the variation in gross margin was a function of the variation in the product mix employed by the drug stores. The results of a simple regression analysis, where gross margin (in percent) was related to percentage prescription sales gave support to his hypothesis. As for variation in expense (in percent), Bass hypothesized that the sales volume, store type, location within a city, business efficiency, product mix and city size were the determinant factors.[65] The results of a partial correlation and regression analysis on a subset of these factors (i.e., sales volume, product mix, gross margin, and city size) indicated that

---

[65] Store "expense" was defined as "the sum of all of the customary expense items except proprietor's withdrawals" (Bass 1956, p.236).

> percentage expense (over a brief range of sales volume): (1) to decline as sales increase; (2) to increase as percentage gross margin increases; and (3) to increase as the size of city in which the stores is located increase (All with significant discontinuity in the relationships) (p.241).

In a number of related studies, Bass (1958,1959), and others (e.g., Brooks 1958, Converse 1959) explored the possible determinant conditions of a phenomenon observed in retailing, due to an earlier study by Secrist (1933). Secrist had observed that stores whose percentage expense and gross margins that were far removed from the average in a particular year, tended, in later periods to revert to the overall average for the entire group of stores (Bass 1958). An "explanation" for this pervasive phenomenon labelled, "regression to type," Secrist argued, could be found in competitive pressures which somehow forced retailers to take steps that would bring them closer to the group norm.

Bass (1958) undertook a study to determine whether these tendencies could also be observed in drug store retailers, and if so, how they may be "explained." A time-series analysis of gross margin and expense percentages for a sample of 100 drug retailers for each of the five years (1948-1952) generally supported, "Secrist's conclusion of 'regression to type' as a general phenomenon of retailing" (Bass 1958, p.310). As for the possible "causes" of this phenomenon, Bass examined the behavior of a number of other operating ratios (i.e., sales growth, changes in

labor, occupancy, and advertising expenses) for upper and lower quartile drug retailers. Results of a series of qualitative comparisons indicated that decreased expense percentages (for high expense stores) to be due to sales growth, and the increased expense percentages (for low expense stores) to be due to increased labor expense. Bass concluded that the ability of the high expense stores in gaining sales growth, and alternatively, the inability of low expense stores (which were presumably already using labor and space to capacity) to control their labor expenses, could be an alternative "explanation" to Secrist's competitive pressures hypothesis.

In a later study, Converse (1959) offered several other conjectures as to why such a phenomenon would occur. Converse appeared less troubled with the "regression" of high expense stores to a lower norm, since it seemed "obvious... high cost operator's must reduce their expenses or go out of business" (p.419). The more interesting question, Converse argued, would be to find out "why low cost [efficient] operators allow their expenses to increase and their rate of profit to decrease?" According to Converse (1959), the possible reasons for the gradual decline in profitability for retail stores could be found in one or more of the following:[66]

---

[66] Converse (1959) did not, however, provide any empirical support for any of his conjectures.

1. Entreprenurial inertia of the store owners,
2. Increasing waste and obsolesence in or of store operations,
3. Increased service offers which add to the expenses of the unit, and
4. General decline in the quality of management through time.

These studies, in general, are illustrative of some of the earlier investigations of retailer performance at the micro level. In this early research, investigators have generally combined a conjectural, speculative orientation with a research methodology conducive more to provide empirical generalizations than "explanations." In later studies, identification of factors posited to influence retail store profitability have followed a similar approach.[67]

Applebaum (1965), for example, proposed that store location, income of population served, store size and age, gross margin and expenses were major determining factors of store sales and profitability. Based on a number of studies that the author undertook for six supermarket chains, Applebaum presented a series of cross-tabulations for each of the hypothesized factors with several indicators of financial performance (e.g., sales per square foot, profit

[67] It is worth noting that several papers by Alderson (1950), Alderson and Shapiro (1964), and the chapters 8 and 9 in Dynamic Marketing Behavior (1965), are clearly exceptions.

per square foot, percent profits, etc.). Results of his analyses indicated that the stores located in planned or neighborhood shopping centers tended to generate higher levels of profitability than those with downtown or small town locations. Further, Applebaum observed that the stores located in higher income areas, with superior facilities (compared to a major competitor) had higher sales, sales per square foot, and profitability. Finally, the results also indicated that the stores in the declining stages of their life cycle (10 years or older) had the lowest profitability; the stores in the ascent stage of their life cycle (3 years or newer) had below average profitability; and the stores in the maturity phase (3 to 10 years of age) had the highest levels of profitability.

A more rigorous study investigating the role of locational factors on retail unit performance was undertaken by LaLonde (1962). Lalonde's primary research hypothesis posited that

> store size and store complex [are] significant [factors] in influencing the consumers' decision on the distance they will travel to fulfill their food purchasing objectives (p.5).

More specifically, a number of auxiliary hypotheses derived from the primary research question stated that[68]

---

[68] These hypotheses appear as separate research questions in LaLonde's monograph. Here they have been combined into one compact statement.

> the drawing power [average distance traveled by consumers], and sales per capita of a supermarket [dollar sales per person per week] to be higher, when the product offering in a retail complex [number and type of different stores] and the size of the store [square feet of selling area] are larger (p.5-6).

The results of an analysis of variance, based on a sample of 15 supermarkets and 5,300 consumer interviews, indicated a strong association between (a) product offerings and the size of complex, and (b) the drawing power and sales per consumer. However, no systematic association was found between either (a) the individual store size and drawing power, or (b) per capita sales and the size of store.

A similar study, investigating the impact of locational factors on the performance of a service establishment was undertaken by Hansen and Weinberg (1979). Using data from 60 banking offices in 17 shopping centers in California, the authors posited market performance (market share) of a banking office was a function of its locational characteristics (relative distance to a central parking center); branch features (presence of walk-up and drive-up windows); newness of the unit (age of branch); and the name of the parent organization.[69] Further, it was hypothesized that the market share (as an indicator of branch performance) was inversely related to distance (i.e.,

---

[69] The variables for market share and location were expressed as fractions. All other variables were coded as dummy variables, 0-1, presence indicated by a nonzero element.

location), and positively associated with the indicators of branch features and image (e.g., age, services offered and affliation). A multiple regression analysis derived from Nakanishi and Cooper's (1974) extension of the MCI model indicated that all the variables except for one (drive-up window) were statistically significant ($p < .01$). Hansen and Weingberg (1979) concluded that

> the significance of the coefficient for location supports the hypothesis that relative location in a shopping area is an important factor in banking office's market share (p.45).

A number of other studies, where financial performance of retail or service establishments were related to a series of demographic, competitive, and store's own charateristics are illustrative of another research thrust in microretailing research. In general, these studies are not concerned with the identification or assessment of "determinant conditions" of retail store performance. The purpose of research with these investigations is typically to build quantitative, predictive models for a retail firm which could subsequently be used as a tool in managerial decision making. Several studies are illustrative of this research orientation.

Clawson (1974), for example, undertook a study to illustrate the usefulness of regression models to

> more effectively screen new branch locations, set realistic performance standards for different communities, and pinpoint remedial actions (p.8).

More specifically, the main purpose of the study, as Clawson noted, was

> to explore the marketing management applications of the regression approach rather than [its implications for] the research methodology or the specific findings (p.12).

Using data from a sample of 26 branches of a local savings and loan company, 24 variables aggregated into three general blocks-- local population, competitive characteristics, and own branch features --were posited as general correlates of savings performance.[70] The list of 24 variables and their operationalizations are reproduced in Exhibit 13. The resultant stepwise regression equation with ten significant variables, Clawson argued, could be used as a managerial, diagnostic tool by comparing the actual performance of the branch with the predicted performance obtained through the regression model.[71]

"Measuring and evaluating the performance of outlet managers in multioutlet businesses" was the theme of a similar study by Kinney (1969). As the author noted

---

[70] Performance was defined as the net savings gain in a branch in one year. Furthermore, all of the data for population and competitive variables pertained to a circular area with a radius of two miles surrounding each branch location.

[71] In a later article, Alpert and Bibb (1974) noted that Clawson's model, which involved 24 predictor variables and 26 observations, was methodologically problematic, since the resulting F ratio with only one degree of freedom could not be used for statistical significance testing.

EXHIBIT 13

The Set Of Predictor Variables From Clawson (1974)

		Units	*Mean*
Dependent Variable			
X_1	Net savings gain, 12 months, in branch	$000	3,341
Population Block (P)			
X_2	Renter-occupied dwellings	%	50.9
X_3	S&L savings per capita (total savings held in all local S&L facilities, divided by local population)	$	2,645
X_4	Income per capita	$	3,492
X_5	Median value of owner-occupied homes	$	30,247
X_6	Persons age 45-64	%	22.8
X_7	Persons age 65 and over	%	11.1
Competition Block (C)			
X_8	Competing S&L facilities	No.	4.3
X_9	Population per S&L facility	No.	18,361
X_{10}	Commercial bank facilities	No.	10.5
X_{11}	Average net savings gain of local S&L competitors, 12 months	$000	2,970
X_{12}	Share of total local S&L savings held by local main and executive offices of competitors	%	27.2
X_{13}	Branch of Colossal S&L Association nearby	1 or 0	0.27
X_{14}	Total assets of competing S&L associations having local branches	$000,000	2,742
Branch Block (B)			
X_{15}	Retail sales per year within one-half mile radius of SFC branch	$000,000	46.7
X_{16}	Branch inside formal shopping center	1 or 0	0.15
X_{17}	Branch opposite formal center	1 or 0	0.15
X_{18}	Branch approaching formal center	1 or 0	0.04
X_{19}	Branch in central business district	1 or 0	0.50
X_{20}	Branch in free-standing building	1 or 0	0.81
X_{21}	Age of branch	Years	13.1
X_{22}	Exterior attractiveness (rating)	1-5	3.3
X_{23}	Interior decor (rating)	1-5	3.8
X_{24}	Parking adequacy (rating)	1-5	3.6
X_{25}	Branch advertising and promotion cost	$000	23.3

Variable No.	Description*	Block	Regression Coefficient	Initial Increase in R^2	Final t-Value
X_{11}	Average net gain by competitors	C	0.708	.449	3.59
X_6	Age 45-64	P	147.191	.147	1.39
X_{22}	Exterior attractiveness	B	1131.404	.106	3.25
X_4	Income per capita	P	1.142	.053	2.53
X_{25}	Local promotion	B	29.987	.029	2.54
X_{12}	Main and executive offices	C	−35.401	.036	−2.99
X_9	Population per S&L facility	C	0.087	.035	3.16
X_{15}	Retail sales	B	20.531	.028	2.30
X_2	Renters	P	−52.925	.019	−2.23
X_{18}	Approaching center	B	−2505.012	.013	−1.51
—	(Intercept)		−9342.863		

> outlet managers generally have no choice as to the outlet to which they are assigned, the size, location or facilities of the outlet, and they have little control over the income, buying habits or other characteristics of the population. Yet, the performance measure (the net contribution of the outlet) include the effect of these factors which are not controllable by the outlet manager (p.6).

Hence, since the differences in measured performance among outlets were a result of variations in locations, facilities of outlets, as well as the differences in the performance of the outlet managers, Kinney argued that the effects of the former should be extracted before evaluating the performance of the outlet manager. Accordingly, to augment the traditional accounting reports used in managerial evaluation, Kinney undertook to construct a regression model to factor out the impact of uncontrollable factors on the financial performance of the unit.

Using the catalog order centers of a national retail chain as his sampling unit, Kinney related a number of demographic (e.g., population, median family income, age etc.), locational (e.g., distance to a central warehouse), competitive (e.g., presence of key competitors) and store characteristics (e.g., remodeling, age of unit, number of catalogs issued, etc.) to sales and the controllable expenses of the unit. Results from a series of statistical tests (e.g., analysis of variance) indicated that

> nearly four times as much of the variance in sales among outlets is explained by the levels of nonmanagerial factors under which the outlets were

> in operation than by differences among managers, after considering the nonmanagerial factors (p.39).

Hence, according to Kinney, a poor reported contribution margin for a unit, based on responsibility accounting methods, could give a faulty indication on the viability of the retail unit and the performance of its manager, since

> A poor reported contribution can be due to a poor location or poor facilities or poor management or some combinations of these factors. A good location with poor facilities and poor manager should probably be remodeled and restaffed, not eliminated. A poor location with good facilities and a good manager should be eliminated and the funds and manager, thus freed, could be transferred to a better location (p.26).

Kinney concluded that an environmental model developed in this fashion could provide much needed information for such decisions.

Cottrell (1973) reported the results of a similar investigation based on a sample of 37 outlets, randomly selected from a population of 800 supermarkets. Cottrell related a number of indicators of financial performance (sales, gross margins, controllable and noncontrollable expenses), both at the level of the establishment and departments within the store to a number of nonmanagerial factors.[72] Cottrell argued that the regression equations

[72] The 20 predictor variables, similar to the earlier studies by Kinney and Clawson, were categorized into several blocks-- store operations (e.g., square feet of selling space, number of check out counters); competitive factors (e.g., discount store presence, number and size of competitors); and demographics of the market (e.g.,

derived from such an analysis were, "a significant improvement over the more traditional estimators of performance based on outlet size alone or on extrapolations of past performance" (p.61). However, he also cautioned that the model was useful only as a short-run forecaster of store performance, since the relationships among the variables could change over time.[73]

Another research thrust in microretiling performance studies is illustrated by Dalrymple (1966). Dalrymple investigated the relationships between the departmental profitability and a number of internal factors. Hence, in contrast to previous studies, which have examined the impact of external variables in predicting profit performance, Dalrymple focused on only the managerially controllable factors (e.g., stock turnovers, merchandise price levels, initial markups and markdowns, etc.) internal to the firm.

Simple correlation and stepwise regression analysis based on monthly and yearly data for the individual departments of one department store indicated that sales volume was the most important merchandising variable in determining profitability. The importance of markups and markdowns appeared to be mixed, while stock turnover was

---

sales potential, size of trade area, population and density).

[73] A recent example of the application and use of quantitative tools for retail decision making can be found in Lodish (1982).

"unable to contribute to the explanation of department store profits" (p.38).

In another study, Morey (1980) examined the sales response to changes in the level of service provided by a chain of grocery outlets. Using a before-after research design, Morey investigated the effect of a change in the staffing policy in 61 government-run Navy commissaries on the change in sales per person-month.[74] Several variables on store characteristics (e.g., the price levels, physical attractiveness, sales per retired consumers) were introduced as control variables, and a regression analysis was performed to discern the effects of (a) hours of operation, and (b) the number of store personnel, on store sales.

The results of the statistical analysis indicated that

> every 1 percent improvement in the service levels [were] accompanied by about 2.9 percent increase in real sales... [however] there was diminishing returns from improving service level, i.e., store sales respond at a slower rate as the level of services improves (p.90).

Two other factors, the physical attractiveness of the store and the relative pricing advantage were also found to have a significant influence on changes in sales volume.

[74] "A person-month is the level of effort associated with one person working for one month or, alternatively, two persons working one-half month" (Morey 1980, p.83). According to the author, a substantial personnel cutback was implemented in most of these stores which resulted in stores either reducing their hours of operation or store personnel or both.

Specifically, the stores with poorer facilities and less competitive price advantage were observed to respond faster to service improvements than the more attractive stores and/or stores offering larger savings.[75]

A final illustration of the studies with a microretailing focus is a PIMS pilot project reported by Buzzell and Dew (1980). The PIMS study was based on a sample of 60 SBU's,[76] that had complete information on the operating and financial statistics, and other estimates on various market factors (e.g., market share, market growth, locational and facility characteristics, merchandise assortments, etc.). Using statistical techniques similar to those of the regular PIMS program, the authors summarized their key findings as follows:

1. Profitability improves with higher market share, measured at the level of local markets.

2. Businesses operating in high growth markets are generally more profitable. (cf., Hall et al 1961, Bucklin 1978b, Ingene 1982).

3. As store expansion and modernization increase, profitability declines--at least in the short run. (cf., Hall et al 1961, Bucklin 1978b).

---

[75] A recent example of this research thrust can be found in Curhan, Salmon and Buzzell (1983).

[76] Strategic Business Unit (SBU) was defined "as a group of stores of a given type (e.g., budget, junior apparel, etc.), located in a given market area (i.e., SMSAs or ADIs)" (p.3).

4. Those stores which were most profitable were definitely the most productive in terms of sales per square foot of floor space. (cf., Ingene and Lusch 1980b, Takeuchi 1977, Wickern 1966).

5. The most profitable businesses operated primarily in mall locations (cf., Applebaum 1965, LaLonde 1962).

6. A retailer's profitability is higher, on average, when his primary competitors also enjoy high space productivity. (cf., Bucklin 1978b).

7. High employee compensation, relative to competition, has a positive impact on employee productivity and consequently store profitability. (cf., Bucklin 1977,1978b, Lusch and Ingene 1980b, Ingene 1982,1983c).

8. High relative prices adversely effect profitability. (cf., Holdren 1960)

Interestingly, a number of the findings from the PIMS pilot study strongly reinforce some of the earlier findings and research hypotheses from both the macro and microretailing studies. In order to highlight these synergies in research results, studies with conclusions similar to PIMS findings are noted in the parentheses.

An Evaluation Of Microretailing Performance Studies

The microretailing studies reviewed in this section are but only a sample of the published literature. Predictably, a significant amount of similar research exists in nonpublic domain in the form of proprietary studies. The

purpose here, as it was throughout the chapter, was to provide a selective but representative review of the previous and present thinking in retailing.

Traditionally, the microretailing studies have aimed to generate quantitative, forecasting models for retail decision making. In most of these investigations, there is neither an intent nor an attempt to make inferences beyond that of the immediate research setting. Although these studies can also be criticized for common methodological flaws (e.g., redundancy or communality of variables on either side of regression equations), these issues are largely irrelevant, given the general nature of these studies.

Collectively, however, these studies are valuable for two reasons. First, since the researchers in this research stream have closely worked with individual retail firms or establishments, these studies generally give a good indication of the "common wisdom" in the field. This is a useful starting point for generating "theories in use" (Zaltman et al 1982). Second, as it was noted at the end of the preceding section, some of the results from these studies provide reinforcing conclusions. In this sense, microretailing research also acts as a form validity check on the results of other studies.

CHAPTER IV

A MODEL FOR THE EXPLANATION OF RETAIL STORE PERFORMANCE

In this chapter, the structure of a proposed model for the explanation of retail store performance is presented. In its most essential aspects, the proposed model is derived from and builds upon the previous research at both the macro and micro level analyses. The major constituent elements of the model, i.e. the theoretical and derived concepts, are defined and linked together through a number of research hypotheses. Collectively, the proposed relationships closely follow the S-C-P paradigm adopted in this research (see, Chapter 2). Specifically, it is asserted that the performance of a retail unit is a complex function of a number of market related factors and how the unit adjusts to these market forces.

Organization Of The Chapter

This chapter is organized around three major sections. In the first section, the definitional scheme for the central theoretical and derived concepts are presented. Collectively, these definitions form the constituent elements of the proposed model. The specific research hypotheses where these elements are interrelated, are

discussed next. In the final section, a causal schemata is presented to bring together all of the research hypotheses in a structural equations framework.

Theoretical And Derived Concepts And Their Definitions

A major weakness in all the previous studies of retailing performance has been a lack of rigorous conceptual definitions of the primary theoretical and derived concepts. In this regard, there appears to be a silent conspiracy, or at a minimum, a strange apathy, towards clearly defining what is meant by the terms used in research.

This is probably due, in part, to the nature of social science itself, where the subject matter of study is centered around human actions and behavior which, more so than in physical sciences, force one to think, observe and study the subject in lay terms. As Hempel (1952) notes

> The vocabulary of everyday discourse does permit the statements of generalizations, such as that unsupported body will fall to the ground; that wood floats on water but metal sinks in it (p.20).

However, such generalizations when couched in everyday terms tend also to have various shortcomings which make it difficult to formulate theories. Hence, for example, store location influencing store performance, or technology of the store effecting retail productivity, are as easy to refute as they are to confirm, depending on how one defines the

terms location, technology, performance or productivity.[77]

The tendency that is all too clear in the previous literature is to equate the theoretical definitions of these or other concepts with a set of "operational" or "empirical" definitions. As Bagozzi (1980) observes

> Marketers implicitly follow an operational definition model when they rely exclusively on observable variables in their theories, assume no error in measurements, or rely exclusively on empirical associations to model and test their theories (p.122).

Thus, for example, performance is variously "defined" as sales per square foot, or as profits per dollar of sales; or location is "defined" as a number of miles to or from a point in a loosely defined geographical space. This is unfortunate, since, as Hempel (1952) notes

> In order to attain theories of great precision, wide scope and high empirical confirmation, [every scientific discipline must evolve] a system of special concepts... [which] are highly abstract and bear little resemblance to the concrete concepts that we use to describe the phenomena of our everyday experience (p.21)

Clearly, rigorous conceptual definitions by themselves, are not a panacea for the advancement of any scientific discipline. However, in the absence of a well-defined set of variables, there is also no clarity in any scientific discourse, and more importantly, it is impossible to establish any meaningful relationships among these

---

[77] Assuming, for the sake of argument, we live in a world of perfect measurements.

variables. The definitions of the key concepts that are used in the present study, therefore, are presented in this spirit. Exhibits 14 and 15 summarize these concepts and their definitions.

The theoretical concepts listed in Exhibit 14 refer to abstract, unobservable properties or attributes of social and economic entities, or phenomena due to these entities. These concepts, as Bagozzi and Phillips (1982) note

> achieve their meaning through formal connections to other derived, and empirical concepts as well as their definition... and usually consist of descriptors of phenomena provided by sentences reflecting the conceptual vocabulary of the theory (p.465).

For example, the theoretical concept, performance, obtains its meaning in part through its own definition, and partly, in its connection with the derived concepts of productivity and profitability. Similarly, the conduct of a retail firm is related to other derived concepts such as effectiveness of store management and marketing effort.

Derived concepts (Exhibit 15), like theoretical concepts, are also unobservable constructs. Unlike theoretical concepts, however, derived concepts must be tied to empirical concepts, i.e., operational definitions.[78]

---

[78] For example, profitability of a retail unit can be "observed" through a number of manifest indicators such as profits or gross margin expressed in dollars or as a percentage of sales.

EXHIBIT 14

Definitions Of The Theoretical Concepts In The Structure-Conduct-Performance Paradigm

Theoretical Concept	Definition
1. Market	A closely interrelated group of sellers and buyers in a geographical area.
2. Potential Demand	The aggregate level of total service outputs that may be desired in a market.
3. Potential Supply	The aggregate level of the potential for service outputs available in a market.
4. Structure	The organizational properties of a market.
5. Industry	A group of sellers of closely substitutable outputs who supply a common group of buyers.
6. Competition	The rivalrous efforts of two or more units, acting independently, to secure mutually desired resources of limited supply.
7. Performance	Composite (economic) outcomes of the activities of a given unit in a given time period and market.
8. Conduct	The patterns of behavior that a unit follows in adopting and adjusting to the market.

EXHIBIT 15

Definitions Of The Derived Concepts In The Structure-Conduct-Performance Paradigm

Derived Concept		Definition
2.1	Character of Market Demand	The relative degree of upscaledness or quality in market demand.
2.2	Demand Growth	The rate of change in market demand potential.
3.1	Intensity of Competition	The strength of actual or perceived level of competition in an industry.
3.2	Overstoring	The degree to which the capacity for service outputs may exceed the potential for market demand.
7.1	Productivity	The rate at which the resources of a unit are combined and converted to outputs.
7.2	Profitability	The degree to which a unit's outputs valued at current prices may exceed its costs.
8.1	Managerial Effectiveness	The perceived ability of a unit's manager(s) to achieve the unit's overall objectives.
8.2	Managerial Expertness	The degree to which manager(s) may be considered to have differential skills or training in operating a unit.
8.3	Marketing Effectiveness	The amount of influence a unit has in a market, relative to other units in developing and facilitating market exchanges.
8.4	Target Market Reach	The degree to which a unit's trade area characteristics matches its intended demand base

Four possible types of relationships connect the theoretical, derived and empirical concepts of theories.[79] The first set of relationships, theoretical definitions, refer to actual or stipulated statements of equivalence between the theoretical concepts and derived concepts. In the context of the present research for example, performance of a unit, by definition, is stipulated to equal the level of productivity and profitability of the retail unit. The second set of relationships, nonobservational hypotheses, interrelate the theoretical and derived concepts, most frequently, through a series of covariance statements (Blalock 1969b). Collectively, such statements form the primary structural relations entertained in research. The third type of relationships, the correspondence rules, specify the manner in which the manifest or observable variables are related to latent or unobservable constructs of a theory. In this regard, correspondence rules form the secondary structural relations entertained in research.[80] Finally, the empirical definitions describe or summmarize the results of the physical operations in taking

[79] The discussion here is adopted from Bagozzi and Phillips (1982).

[80] The nature of correspondence rules is a hotly contested area in research methodology (c.f., Bollen 1981, Namboodiri et al 1975, Bagozzi 1980), and in philosophy of science (c.f., Carnap 1956, Campbell 1969, Keat and Urry 1975). A discussion on these issues will be deferred until the measurement section in the next chapter.

measurements (e.g., observation, recording etc.), to the observed concepts.

In the next section the discussion centers on the first of these relationships, the nonobservational research hypotheses. The measurement of the theoretical and derived concepts (i.e., correspondence rules) and the empirical definitions of the observed variables are presented in Chapter 5.

Nonobservational Research Hypotheses

Both the macro and microretailing studies reviewed in the previous chapter posit that a number of market and establishment related factors influence a unit's performance. The predominant mode of analysis in this literature, with some exceptions (e.g., Ingene and Lusch 1980b, Kinney 1969 Dalrymple 1966, Morey 1980), can be characterized as structurally oriented where the behavior of the retail unit is either implicitly assumed away or considered simultaneously with all the other factors.[81]

[81] Part of the reason here probably lies in the strong influence of the neoclassical economic thinking on marketers, which posits retail markets to be laboratories of atomistic competition (Bain 1968, Holdren 1960). According to this view, the decisions as to what and how much to produce, and how to produce it, are imposed on all retailers given a set of market conditions approaching the neoclassical assumptions of perfect competition. Other reasons probably include the ready availability of data on structural elements, and the difficulties in conceptualizing the elements of conduct for a retailer.

The general approach of this study and the proposed model for the explanation of store performance modifies this view in a significant way. More specifically, it is proposed that the economic performance of a retail unit is fundamentally related to the conduct and/or behavior of the unit as it adjusts to the various elements of the marketplace. Hence, the influence of market demand and supply elements, as well as other environmental factors, are not ignored in this framework. However, the influences of these factors, in many instances, are hypothesized to have indirect links to performance, operating through the elements of a unit's conduct.

In the next four sections, an incremental model building approach is followed in presenting the major research hypotheses of this study. In the first section, the relations between the structural elements of market demand and supply are considered. In the next two sections, the elements of market demand and supply are first related to the unit's conduct, and then, to store performance. Finally, in the last section, the relations between the elements of unit conduct and retail store performance are discussed.

The Relations Between Elements Of Market Demand and Supply

The general nature of the associations between market demand and supply factors have been widely and intensely investigated in retailing. The genesis of this interest, in part, lies with the conceptual framework provided by Central Place Theory (Christaller 1934, Losch 1964, Berry 1967), and in part, with the empirical literature provided by gravitational studies (Reilley 1931, Converse 1942,1949, Reynolds 1953, Jung 1959).

Central Place Theory provides a general framework which seeks to explain how and why economic exchanges develop in geographical space. Within this framework, a central place is defined as an agglomeration of people and people serving functions which is similar to the market concept defined in this study.[82] Berry and Garrison (1958) have extended the notions associated with Central Place Theory, introducing the concepts of threshold and the range of a function. The former is defined as the minimum size of an agglomeration of people (or purchasing power) necessary before a function is provided in a central place. The latter refers to the maximum distance people are willing to travel to obtain a function. Hence, the range of a service, or more appropriately, a function, delineate the trading area of a central place. The trading area, then, has a

[82] Function, within this conception, refers to any type of institution, service, etc., which serves a population.

lower limit which incorporates the threshold, and an upper limit beyond which the central place is no longer able to support the function (Berry and Garrison 1958). Although independently developed, some of the early gravitational formulations derived and tested by Reilley (1931) and Converse (1949) have provided general empirical support to these notions. A number of research programmes in retailing are a direct outgrowth of the conceptual framework provided by Central Place Theory and gravitational research done by Reilley and Converse (Ingene and Lusch 1981).

The first research programme, the measurement and determination of trading areas, have sought to delineate the physical boundries of retail markets, and is generally considered to be the precursor of store location research in retailing. Here, the initial investigations have been either at the level of cities (e.g., Converse 1949, Forbes 1972, Douglas 1949a,b, MacKay 1973, Thompson 1964), or at the level of shopping centers (e.g., Huff 1966, LaLonde 1962). More recently a number of authors, incorporating various "image" inputs to the probabilistic formulations of Huff, have extended this research to the individual store level (Jain and Mahajan 1979, Stanley and Sewall 1976,1978).

A second research programme has focused on the correlates of retail sales or sales potential of trade areas. Some of these studies have investigated the

associative links at the level of cities (e.g., Russell 1957, Ferber 1958, Liu 1970,1972, Ingene and Lusch 1980b), while others have looked at the factors at the level of individual stores (e.g., White and Ellis 1971, Kelley 1967, Applebaum 1966, Hughes 1966).

A third research programme has attempted to identify the determinant conditions of retail trade structure. Some of these investigations have been cross-cultural studies, much in line with the study by Hall et al (1961) (e.g., Takeuchi and Bucklin 1977, Bucklin 1972, Arndt 1972). However, the bulk of the research here has concentrated on metropolitan markets as the primary unit of analysis (e.g., Ingene and Lusch 1981, Ingene 1983c, Holdren 1961, Bruce 1969, Thompson 1967, Cox, Jr. 1969, Hindersman 1960).

Although the literature is voluminous in each of the three research programmes, these studies share significant communalities in their research hypotheses. In fact, the major "theoretical" relationships proposed in all three streams are surprisingly few.[83] These relationships are summarized in Exhibit 16 in a series of covariance statements.[84]

---

[83] This requires that the myriad operational definitions adopted in these studies are reformulated in a set of latent constructs.

[84] Some of the popular operational definitions of the theoretical concepts are given in the parentheses.

EXHIBIT 16

A Summary Of The Relationships Between The Elements Market Demand And Supply

1. The higher the level of demand (e.g., size of population, households or income), and/or mobility of demand in a market (e.g., incidence of auto ownership):

   a) the greater the amount of functions (e.g., number, and type distribution of retailers), and

   b) the greater the range of functions offerred in a central place (i.e., the geographical size of trade area).

2. The greater the concentration of demand (e.g., population or automobiles per square mile):

   a) the greater the concentration of functions in the market (e.g., stores or size of stores per population or household).

3. The greater the rate of change in demand (e.g., population or household growth), and/or mobility of demand (e.g., growth or distribution of income):

   a) the greater the probability that certain types of functions will increase (e.g., stores selling specialties or higher order goods),

   b) certain other functions will decline (e.g., stores selling necessities or lower order goods), and

   c) the greater the propensity for the consolidation of offer in such markets (e.g., the average physical or sales size of stores to increase).

EXHIBIT 16

A Summary Of The Relationships Between The Elements Market Demand And Supply (Cont.)

4. The propensity of demand agents to travel, and/or the probability of their retail patronage are:

   a) inversely related to the actual or perceived spatial distance separating the demand agents and the functions in a market,

   b) directly related to the actual or perceived amount of functions (e.g., assortment, size of shop, hours of operation), and

   c) directly related to the perceived quality of functions available in central places (e.g., quality of employees, merchandise, store atmosphere and other store images).

5. The greater the availability or application of new technology in the creation or supply of functions (e.g., capital to labor ratios, relative wage rates), and/or its dissemination (e.g., the incidence of 'department' stores):

   a) the greater the propensity for functions to be consolidated in central places (e.g., average sales or physical size of stores).

Underlying these general propositions, of course, are also a number of assumptions. Some of these assumptions are derived directly from economic theory (e.g., the relative ease of functions to enter and exit central places, propensity of markets to rest or equilibriate, utility or profit maximization principle, etc.), while others are more behavioral in nature (e.g., preferred utility of convenience or the disutility of travel, relatively free availability and uniform processing of information, etc.). For each of these general propositions, there appears to be a fair amount of conceptual and empirical support. However, through the years, two aspects of this general area of inquiry have resisted a satisfactory resolution.

First, in investigating the relations between elements of demand and supply, there appears to be no clear-cut way to specify the causal ordering or to explicate the precise manner in which these relations may unfold in time. On the one hand, for example, Central Place Theory implies that the incidence of function formation in a central place is due to the existence of certain elements of market demand (e.g., Cox 1959, Thompson 1967). Hence, the causal ordering of phenomena appears to flow from the elements of demand, as the causative factors, to the supply conditions, as the effects. On the other hand, the existence of functions in a central place also seems to

"attract" demand elements, as evidenced by retail gravitational research.[85] Thus, the implied causal ordering in this case appears to be from a given set of supply factors to the elements of demand. Clearly, given a sufficiently long time frame, a case can be made for a pattern of reciprocal influences. However, in the short run and with cross sectional research designs, its exceedingly difficult to assess which "snapshot" of this process is captured by an investigator.

A second problem concerns the difficulties associated with the delineation of the empirical referents for the elements of market demand and supply. For example, the level of demand vs. the mobility of demand; the technology vs. consolidation of functions; or the growth of demand vs. the availability of technology in central places, are all distinct phenomena in themselves. Each of these, however, have proved to be very difficult to "capture" in easily differentiable "operational definitions."[86] These problems are especially exasperating in investigations where secondary data sources, at aggregated levels of analysis, are utilized in empirical research. Clearly, the issue here is not one of "bigness correlated with bigness" (e.g.,

[85] Note, also, the "causal schemata" proposed by Hall et al (1961) relating income per capita to retail productivity (see, Chapter 3).

[86] At least, with the current or available state of research technology.

Ingene and Lusch 1981). But rather lies in our inability, in most cases, to operationalize meaningful referents for these constructs.[87]

The set of nonobservational research hypotheses that are discussed in this section are not totally free of the issues raised here. Since the general design of the research is cross-sectional, the causal ordering between market demand and supply elements can only be "inferred" from the proposed relationships. As the issues surrounding empirical referents are closely tied to hypotheses testing, these will be taken up in the next chapter.

In this study, the relationships between three elements of market demand and two elements of market supply are considered. The first demand element, the Character of Market Demand, refers to the relative degree of the upscaledness or the quality of the "average" purchasing power in the market. The second element, the Potential Market Demand, is defined as the "total" or aggregate capacity of purchasing power in the market. Finally, the third demand element, the Demand Growth, refers to the relative rate of change in the potential for market demand.

---

[87] That is, to specify indicators which are valid in the sense of that they are both convergent and discriminant of the phenomena under investigation.

The two elements of market supply, Overstoring and Competitive Intensity are closely interrelated, yet distinct concepts. The former refers to the degree to which capacity for the provision of services may exceed the potential for market demand, while the latter is defined as the degree of actual or perceived rivalrous activity among the retail units in the market.[88]

The choice of these five elements is guided in part by the body of existing research, and in part, by the exigencies of the real world. The conceptual framework from Central Place Theory and the empirical research from the gravitational studies both indicate that the level of competitive interaction in a trading area is a function of various demand conditions. Furthermore, the studies of retail market structure have consistently found that the level, density and growth of demand elements are among the primary factors associated with the number, size and distribution of functions at various levels of aggregation (see, Chapter 3). The validity of these conclusions and their practical relevance, however, rest on the assumption that similar relationships hold at the micro level.[89]

---

[88] Hence, "overstoring" is similar to the notion of "centrality" of Central Place Theory (i.e., excess of functions provided in a central place over those needed by the local population) (Christaller 1966). Some researchers have also labelled this phenomenon as "retail space saturation effect" (Ingene 1982).

[89] In this regard, one should be aware of "ecological

In this and forthcoming sections, therefore, three issues are simultaneously explored. The first issue concerns whether some of the hypothesized relationships from the previous studies, at high levels of aggregation, will also hold within intra-urban retail trading areas. A related second issue concerns whether there are differences in these relationships across metropolitan and rural markets. Finally, the last set of issues concern whether these variables have direct influences on performance, as the previous investigations seem to imply, or if these influences are indirect, possibly mediated through various elements of unit behavior or conduct.

It should be noted that none of these issues, given the nature of this study's design and the nature of retailing phenomena, can be subjected to a "crucial test." The major objective here, as well as in the next sections, is to provide a "skeleton" of the type of relationships that may be further explored and refined in future research directed towards understanding the determinant conditions of store performance.

---

fallacy," i.e. the hazard of false inferences drawn from a set of relations that hold at one level, to also hold at another (Langbein and Lichtman 1978). Hence, the research hypotheses advanced in this section and their empirical tests later in the research, may be construed as a test of "validity" of such assumptions.

The primary set of relationships between the set of demand and supply elements investigated in this section closely follow in the tradition of earlier research. These hypothesized relations are stated in a series of research hypotheses below, followed by a brief commentary on each of the proposed links. Exhibit 17 provides a path analytic schemata which summarize the proposed relationships.

H-1: Markets are more likely to be overstored:

1. where demand character or quality is high;
2. where demand potential is high; and
3. where the demand growth is high.

H-2: Relative competitive intensity is likely to be high:

1. where potential demand is low; and
2. where markets are relatively overstored.

The first set of hypotheses (H-1), concern a phenomena which is relatively unexplored in marketing. Until recently, marketing scholars have shown a curious ambivalence towards the study of the conditions which may lead to overstoring of markets or of its possible impact on store performance.[90] This is probably due, in part, to the

---

[90] Ingene and Lusch (1981), Lusch (1982), Bucklin (1983) are among the recent exceptions.

EXHIBIT 17

The Proposed Relationships Between Elements Of Market Demand And Supply

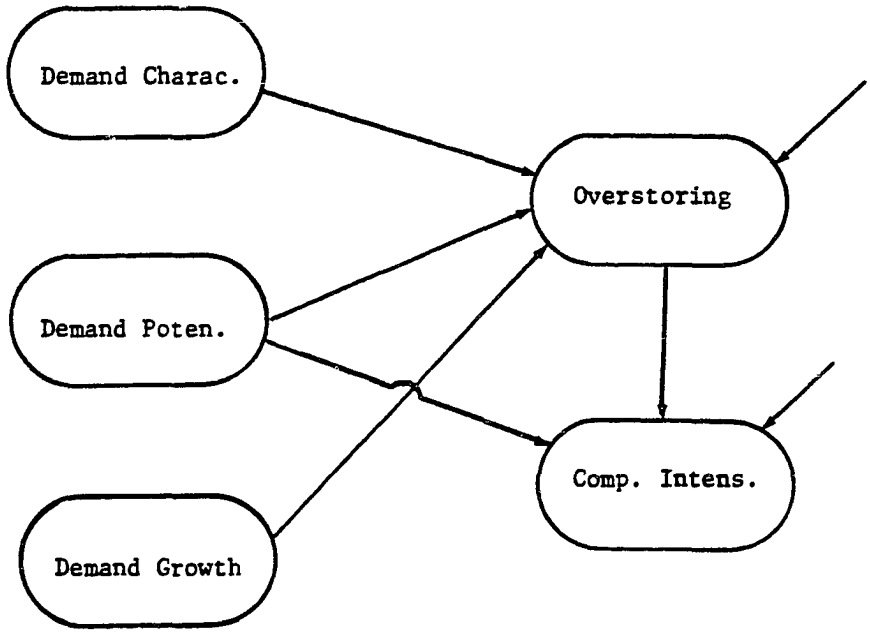

belief that overstoring is a short-run aberrance which market forces, in time, stabilize. Hence, as Ingene and Lusch (1981) have argued, such conditions are unlikely to exist in the long-run, since

> we know from economic and financial theory that when the rate of return on net worth in an industry falls below an acceptable level... some firms leave the industry... and the process of exit continues until the rate of return attains an acceptable [equilibrium] level (p.124).

Although the general modus operandi, as stated, is consistent with the notions associated with classical price theory it is, nevertheless, at some variance with the realities of most retail markets[81] (cf., Karch 1984, Davidson 1980, Bucklin 1983). Furthermore, as some industrial organization researchers have also noted

> a number of important industries of atomistic market structures have been plagued with chronic overcapacity of plant and a chronic redundancy of labor force (Bain 1968, p.471).

Reasons which may induce and/or sustain such overcapacity, according to Bain (1968) include:

1. Inability of sellers to restrict industry output and/or adjust prices to overcome excess capacity;
2. Relative ease of entry to, but slowness of exit from, the industry;

---

[81] There is a considerable consensus among most retail analysts that most metropolitan markets in North America are, and for some time have been, overstored.

3. Relative lack of mobility of the labor force to exit the industry characterized by overcapacity; and

4. Various historical or isolated chance events.

These factors, no doubt, have much relevance in the context of most retail markets. With the exception of the "ease of market entry" argument (point 2 above), however, these set of factors do not "explain" why overstoring occurs.[92] To the extent that retail functions are "created" in anticipation of demand conditions, and to the extent actual or potential retail "outputs" exist in interaction with elements of demand, the reasons for occurance of overcapacity in retail markets must lie with such demand factors.[93]

Hall et al (1961) in their investigations of retail structures in three countries have observed that in markets where incomes are high and population is growing, the incidence of chain stores is more prevalent and the average size of shops is larger. Ingene and Lusch (1981) and Ingene (1983c) have reported similar findings for metropolitan

---

[92] These factors are probably plausible "explanations" of why overcapacity "persists" or is "sustained."

[93] It is not implied here that overstoring comes about, automatically, due to conditions of demand, without the collective actions of decision making agents. Hence, one may argue that the decision calculi of such agents are also important factors in a fuller understanding of the conditions which bring about overstoring. Clearly this is so, but it also takes us into an infinite regress on possible "causes."

markets.[94] Although Hall et al have not specifically considered a direct linkage between demand elements and overstoring, they have nevertheless noted that

> the rate of growth of an area affects retail structure both from the demand side, by way of inducement to invest, and also from the supply side, by the availability of site for new and conveniently laid-out shops (p.137).

Hence, it is possible to infer from Hall et al's analyses that the demand character and growth in retail markets, coupled with Bain's observations on the imperfections in such markets, may provide a more conducive setting for overstoring to occur than otherwise.

In a recent paper, Davidson (1980) also attributes overstoring to "favorable demographics," manifested for example, in increasing levels of income and to "favorable financial markets." However, Davidson, and in another paper Bucklin (1983), speculate that overstoring may also result from the expansion of resources by existing retailers in the market who are trying to secure greater market share or to preempt new entries.[95] To the extent decisions to expand capacity are in response to high or growing demand conditions in the market, the two possible "explanations"

---

[94] Of course, to the extent chain stores are also of larger size than other retail units, these effects may be interpreted as referents of a more global single factor, rather than two distinct phenomena.

[95] The question as to which modus operandi is more important can be answered in a longitudinal research design, and hence, is not specifically explored here.

are of course closely interrelated. In general, then, it is reasonable to expect that markets with favorable demand conditions manifest in the character, potential and growth of demand, to also have greater propensity for overcapacity.

The second set of hypotheses (H-2) concern the link between relative degree of competitive intensity, and the levels of overstoring and demand potential in retail markets. A positive association between overstoring and competitive conditions is in part implicit in the expectations expressed for H-1. More specifically, new retail entries or the expansion of existing facilities in a trade area would raise the level of competitive activity for two reasons. First, with additional capacity for service, retail units would be expected to at least maintain their respective market shares. Second, since most retail units operate close to their breakeven points, the availability of a new potential for service outputs would also lead to more competitive activity than otherwise.

However, although a positive association is intuitive, the possible "causal ordering" of these phenomena is troublesome. This is because an alternative hypothesis, i.e., competitive intensity leading to overstoring is also plausible. As both Davidson (1980) and Bucklin (1983) speculate, the motivation for store expansion may be a result of an intensified struggle for market share or of

intense jockeying for a favorable competitive position in the market through new capacity. Hence a reciprocal link between overstoring and competitive intensity could also be entertained.

The inverse relationship between demand potential and level of competitive intensity is probably based more on common sense than on any "theory." Markets that have a greater amount of aggregate purchasing power would generally be expected to have lesser competitive activity if everything else were assumed constant. However, as H-1.1 implies, everything else is not constant. Hence, the proposed link here is interesting not so much because of a trivial direct link to competitive conditions, but in its value in the network of relationships expressed in H-1 and H-2.

The Relations Between Elements Of Market Demand, Supply And Store Performance

Classical economic theory, as well as previous investigations of retail unit performance generally imply that, ceteris paribus, the economic performance of a retail unit will be higher, the higher the potential and growth of demand in a trade area. The traditional argument here can be summarized as follows: A higher level of demand (e.g., household or personal incomes) is closely associated with a greater proportion of disposable income spent on retailing

services. The larger retail transaction sizes and the greater degree of mobility for "custom" to travel within the trading area are generally seen as further confirmations of this phenomenon. Hence, the level of demand, all else being equal, is posited to be a primary factor in influencing the volume of sales, and with an invariant cost structure, the profitability and/or productivity of the retail unit. The demand potential and its growth have similar effects on the volume of retail output and the performance of the retail unit (cf., Hall et al 1961, Cottrell 1973, Clawson 1974, Kinney 1969, Takeuchi and Bucklin 1977, Bucklin 1972, Ingene 1982). However, two aspects of this line of reasoning, one dealing with the analytical usefulness of ceteris paribus assumption, and the other, concerning the applicability of such direct linkages in micro level anaysis are open to question.

It is generally recognized that demand conditions, as well as the forces that they may set into motion are significant contributors in shaping the structure of retail trade and other elements of supply (cf., Ingene and Lusch 1981, Hall et al 1961, Bucklin 1972). However, to the extent that the trade structure is also a factor in affecting unit performance, the meaningfulness of the ceteris paribus assumption becomes rather tenuous. For example, if favorable demand conditions lead to a higher

level of competitive activity, and further, if the economic performance is inversely related to the level of competitive activity, the relationships between demand conditions and store performance are not very clear. In fact, the associations between demand conditions and performance may be "positive" or "negative," depending on the relative strength of associations in the sequence[96] and the probable impact of other intervening factors (e.g., how well a store is run). The previous research streams, although cognizant of this broader reasoning, have not investigated these possible indirect links.[97]

The second issue, the applicability of such direct links in a micro setting, naturally follows from the first. The recent research on determinant conditions of store patronage (e.g., Tigert 1983, Pessemier 1979, Stanley and Sewall 1977) indicate that the frequency of customer patronage, and by extension, the sales volume and performance outcomes, are a function of the relative marketing effort or the "position" of a unit in the marketplace. The influence of these factors are clearly

---

[96] For instance, if the link between favorable demographics and competitive activity is consistently stronger than the link between the latter factor and store performance, a negative relationship among favorable demographics and performance would not be surprising.

[97] In any case, such indirect links could not have been uncovered with the single equation parameter estimating techniques used in these investigations.

quite independent of the more global demand elements in themselves. In fact, in the absence of these and other factors, one would be left with the unreasonable inference that only favorable markets would harbor "better" performing stores. Therefore, it is plausible to speculate that the level, potential or growth of demand may not be "primary" determinant factors of store performance at the level of intra-urban trading areas. In this regard, it may be more appropriate to think of such demand elements as part of the "market conditions," around which the competitive environment is shaped, and within which the retail unit operates in constant interaction.

Before a statement can be made linking demand conditions to store performance, it is useful to examine the associations that may exist between supply elements and performance. In regard to these latter relationships, two alternative views can be identified in the literature.

The first view, which may be termed as "the structural paradigm," is closely associated with industrial organization studies. According to this view, a direct[98] but an inverse link would be expected between store performance and supply elements entertained in this study (i.e., overstoring and competitive intensity). The

[98] Note that, here, "direct" is used as an antonym to "indirect." This is the standard usage of the term in structural equations methodology which implies a "valence" but not a direction.

following passage from Bain (1968) illustrates the general orientation:

> There should be some long-run tendency for higher seller concentration within industries to be associated with relatively higher profits and for lower concentration to be associated with lower profits... In a more specific form, this hypothesis should read as follows: High seller concentration within industries should be associated with substantial excesses of selling price over long run average costs, moderately high concentration with appreciable but lower excesses over costs, and lower concentration with no excesses at all (p.439).

In transplanting this view to retail markets, several points are noted.

First, it is generally argued that retail industries can be appropriately characterized as relatively unconcentrated since the market share of the top few sellers seldom reaches 50 to 60 percent in most local markets (Lusch 1982). Second, retail markets can also be characterized as being relatively easy to enter, and furthermore, more prone to plant overcapacity because of the imperfections in resource mobility (Bucklin 1983). Finally, it is generally assumed that the unique location of each unit, although it gives each retail store some degree of "offer differentiation," and hence, a unique advantage, nevertheless does not appreciably influence the cross-elasticities of demand due to "scrambled merchandising" (Holdren 1960). In summary, according to Bain (1968)

> Chronically subnormal earnings to enterprises and to labor in an industry [may be] linked to "destructive competition" which is, in turn, based on chronic redundancy of plant capacity and labor force relative to demand... a good example of [this] phenomenon is exemplified in some industries in distributive trades (p.470).

The second view, which may be termed as "the behavioral paradigm" has its roots in the notions of biological competition in life sciences[99] (Henderson 1983). Bucklin (1978b) provides a summary of the central themes in this orientation:

> In general, we may expect that firms or their establishments operating in the more competitive markets will function at higher levels of productivity. [In such markets], the pressures should be such that only the most efficient organizations could continue to operate under such conditions. Those with less capable management and less modern plant would be weeded out... [Hence] stiff competition might bring about a greater discipline in both employees and management; thereby causing enhanced productivity (p.89-90).

This alternative view, however, is cognizant of possible anomolies, and as Bucklin further notes

> it may be important to distinguish between markets where competition is strong but the forces of supply and demand have weakened. The latter situation may produce lower performance because resources can not exit the market sufficiently fast (p.90).

---

[99] It is important to note that the structural paradigm is also cognizant of the behavioral elements. Creation of overcapacity, decisions to enter markets with favorable demand conditions, differentiation of offer through unique location are examples of such elements.

Hence, when the behavioral elements attributed to the firm are ignored (or for whatever reason they are inoperable), the two views seem to converge in their conclusions. On the basis of these observations and speculations, several research hypotheses can be advanced. Exhibit 18 provides a summary of the proposed relationships. When the individual demand and supply elements are considered in isolation, their respective relationships to store performance can be summarized in the following set of research hypotheses:

H-3: Retail stores operating in markets characterized by favorable demand conditions manifested in:

1. higher character or quality of demand;
2. higher demand potential; and
3. more rapid demand growth,

would be expected to have higher levels of performance.

H-4: Retail stores operating in markets characterized by

1. relatively high overstoring; and
2. higher competitive intensity,

would be expected to have lower levels of performance.

These hypotheses are the traditional statements of covariation when the ceteris paribus assumption is in effect. However, when the intermediate links due to H-1 and H-2 are also considered, Hypothesis-3 can be modified as follows:

> H-3A: The favorable demand conditions in retail markets would lead to lower levels of store performance when:
>
> 1. each of H-1, H-2 and H-3 holds; and when
> 2. the influence of H-4 is greater than H-3.

A similar alternative hypothesis regarding H-4 can also be advanced. Before this is done, however, it is appropriate to look more closely at some of the elements of unit behavior.

EXHIBIT 18

The Proposed Relationships Between Elements Of Market Demand, Supply And Performance

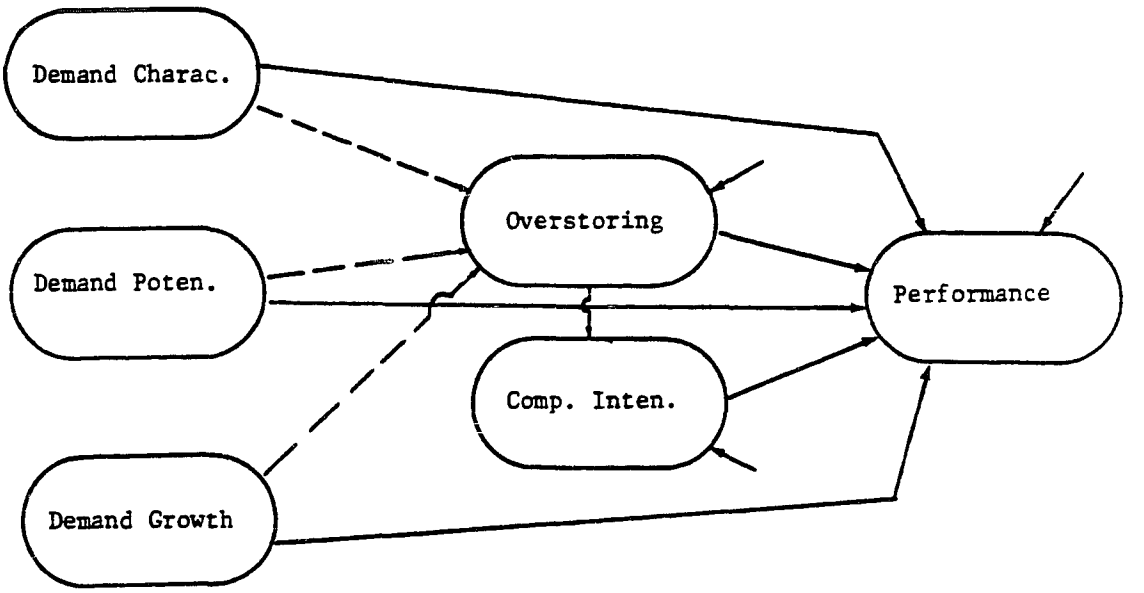

The Relations Between Elements Of Market Demand, Supply And Unit Conduct

Within the general S-C-P paradigm, the relationships between behavioral elements of unit conduct and market conditions are the least understood and researched of all the linkages. In the proposed associations between market forces and performance, however, there is always an underlying behavioral posture implied or attributed to the firms in the industry. Despite this, the general posture taken in marketing has closely paralleled the prevailing attitude in economics. This orientation is well summarized in the following passage from Bain (1968):

> In a priori theory... we may envisage a three-stage sequence of causation running from market structure to market conduct to market performance. That is, structure is systematically associated with or determines conduct; and the conduct, as determined by structure, determines performance. Therefore, structure is associated sytematically with performance by the link of its systematic association to conduct. But as we try through empirical investigation to implement or verify this sort of explanatory-predictive hypothesis, we find that actual patterns of market conduct cannot be fully enough measured to permit us to establish an empirically meaningful association either between market conduct and performance, or between structure and market conduct. It thus becomes expedient to test directly for net associations of market structure to market performance, leaving the detailed character of the implied linkage of conduct substantially unascertained (p.329).

In reading through Bain's statement, one may be led to believe that "measurement" of conduct elements is the key issue in the investigation of such elements. This is, of course, a gross oversimplification.

Although the problems in "measuring" firm conduct are real, they are not any more complex than those in "measuring" the elements of demand, supply or performance. If the sheer volume of literature in the strategy-performance area is any indication, the measurement of firm conduct has not been a "major" problem in linking behavioral elements to firm performance. Hence, the main issue at hand would appear to be not so much a problem of measurement, or of establishing empirically meaningful associations, but what may probably be best described as lack of adequate conceptualizations.[100]

As it was noted in Chapter 3, the previous studies at both the macro and micro level analyses are replete with various referents of conduct elements. These factors have usually been subsumed under various empirical definitions of location, store or facility factors, service levels provided, or managerial attributes (cf., Clawson 1973, Kinney 1969, Hise et al 1983, Hansen and Weinberg 1979).

---

[100] According to Blalock (1982), "conceptualization involves a series of processes by which theoretical constructs, ideas, and concepts are clarified, distinguished, and given definitions that make it possible to reach a reasonable degree of consensus and understanding of the theoretical ideas we are trying to explain" (p.11).

These elements of retail conduct can be more broadly categorized into a descriptive tripartite classification in "strategic" or long-term decision variables (e.g., location, store size), "operational" or short-term decision variables (e.g., price, promotion, service levels), and managerial variables. Such labelling, however, makes it difficult to operationalize the underlying theoretical constructs.

Probably the most parsimonious conceptualization of the elements of store conduct is provided by Alderson (1965) in Dynamic Marketing Behavior. Noting that "for the most part, retailers are engaged in adapting themselves to the market environment" (p.214), Alderson has identified four major problem areas which "call for decisions, and, in some cases, a continuing flow of decisions" in a retail setting.[101] These elements are arranged into two Decision Domains [in Establishment and Offer], and two Decision Levels [in Capacity vs. Blaze] (See Exhibit 19). According to Alderson (1965):

> Decisons in the Establishment Domain are generally concerned with enterprise differentiation, [whereas] decisions in the Offer Domain pertain to

---

[101] It should be noted that the elements of retail conduct, by neccessity, are the products or outcomes of various decisions made at either the firm or unit level. Hence, the resultant position of a store in the marketplace, in either its capacity for service or in the nature of its offer, is the ultimate manifestation of such decisions. In this sense, Alderson's terminology (in decisions or decision areas), and the one adopted in this study (in elements of store conduct) are closely intertwined, and in many cases, are conceptually inseparable.

the products and services which the store is trying to sell (p.213).

EXHIBIT 19

Elements Of Retailer Conduct From Alderson (1965)

Decison Levels	Decision Domains: Establishment	Decision Domains: Offer
Capacity	Store Location and Size	Assortment
Blaze	Store Image	Promotion

Establishment domain decisions are further delineated in Capacity vs. Blaze decision levels. The former decision area is broadly comprised of those elements which determine the "capacity" of service for the retail unit (e.g., location, size, layout and design, and other physical characteristics). The latter decision area, the blaze level, consists of those decision elements which influence the "propensity of customers in the relevant population" to differentially trade in a store without specific regard for their immediate needs.[102]

[102] Alderson (1965) notes that "the term blaze... seems especially appropriate in retailing where there is a continuous effort to keep a light burning to which

The Offer Domain decisions are similarly divided into two decision levels. The Offer/Capacity decisons include the nature and scope of service availability (e.g., merchandise assortment, prices, discounts, credit terms and warranties). The Offer/Blaze decisions, on the other hand, subsume "promotion" in its broadest sense (i.e., including within-store informational displays and "advertising through all kinds of medium). As Alderson repeatedly cautions, however,

> A store cannot make any of these decisions in isolation as, for example, developing an assortment without any consideration for store image... [or as] in the area of structure and layout [where] considerations shade from factors affecting physical operating capacity over into others affecting mainly store image. [Hence], while the four areas can be discussed separately, they are always combined in competitive impact (p.216-217).

Five elements of unit conduct, the first based on the notions due to Alderson, and the others based on the previous empirical research are considered in this study. In the balance of this section these elements are defined and a series of research hypotheses linking these elements among themselves and to other market factors are presented.

---

customers will respond. It is the only word which seems general enough to cover both store image and promotion which are somewhat different ways of accomplishing the same thing" (p.213-214).

The decision areas in Alderson's framework are highly interdependent and overlapping, not only at a conceptual level but also in terms of their manifestations in the elements of unit conduct. There is little doubt, for example, that retail assortments (e.g., dollar inventories, or number of SKU's) is highly correlated with the size of unit (e.g., square feet of selling space); or that the amount of service and promotional effort influence a unit's perceived position or image; or that the design or layout of physical facilities has an impact on both the service "capacity" and the store "atmosphere." One possible way out of this difficulty in conceptualization is to think through "higher order constructs" where the lower order elements can be viewed as manifestations of a more abstract concept.

Effectiveness of Marketing Effort as a central notion in market behavior of the retail unit may be defined in this spirit. This construct refers to the aggregate influence of a retail unit's position in the marketplace, in relation to other stores.[103] According to this definition, all the principal elements of unit behavior such as locational convenience, customer service, assortments, promotion, and so forth can be subsumed under a single, higher order construct.

---

[103] Here, the notion of "influence" is restricted to mean the results of a unit's actions and/or decisions in developing and/or facilitating exchanges.

A second component of retail unit conduct considered in this study concerns what may be broadly labelled as the "quality of store management." Although the role of store management as the ultimate implementor of the various decisions is well recognized, this is another area weak in conceptualization in the retailing literature.

In studies which focus on retailing in the aggregate, for example, the "wage rate" has frequently been used as a proxy variable for such disparate notions as the quality of labor force, the efficiency in use of labor, the scarcity of labor, or the quality of supervision in retailing (cf., Ingene 1982, Takeuchi 1977, George 1966). In other studies, where the focus of analysis is the individual retail units, various operational measures of the qualifications and social or economic status of the store manager (e.g., age, marital status, education, etc.) have been prominent explanatory factors of store performance. Although such empirical definitions may have predictive significance in individual research studies, they are of little value in establishing meaningful theoretical linkages.

The dual notions of managerial expertness and effectiveness considered in this study are two concepts which underlie most of empirical definitions used in the previous research. In this regard, Managerial Expertness is

defined as the degree to which a store manager is considered to have differential skills or training in operating a retail unit. Managerial Effectiveness, on the other hand, refers to the overall ability of a store manager to achieve a retail unit's objectives.

The two remaining elements, the relative size and the target market reach of a store, concern the outcomes of previous strategic decisions evaluated under the prevailing market conditions. The Relative Size of Unit refers to the amount of differential capacity of a store in relation to its main competitors.[104] Target Market Reach, on the other, refers to the degree to which a retail unit's choice of a market to locate matches its intended demand base.[105]

As to the linkages among these conduct elements or to their possible relationships with the market factors, there initially appears to be little or no a priori theoretical basis. Hence, although some of the individual relationships considered may appear to be exploratory in nature, this is misleading. It should be recalled that the relationships considered here are essentially aimed at an explication of the various implicit or explicit assumptions

---

[104] In this regard, relative size also defines an aspect of what may be termed "felt competitive intensity," which results from a unit's own capacity decision.

[105] Location, in this sense, does not imply spatial "convenience." In the definitional scheme adopted, this appears as an element of marketing effectiveness.

of previous research. Therefore, the research hypotheses advanced in this section, collectively, have significant "confirmatory" overtones.

In the discussion of the "behavioral paradigm" in the previous section, it was noted that an explanation of the influence of market conditions on unit performance requires an intervening link in the behavior of the firm in the marketplace. In retailing performance research, the genesis of the discussion on these behavioral elements probably lies with the study by Hall et al (1961). These authors proposed that demand conditions in retail markets were closely associated not only with the organization of supply (i.e., the structure of trade), but also with various elements of retail unit behavior (e.g., availability of enterprising people, careful use of labor, higher capital labour ratios, fuller use of existing capacities, etc.). A number of other marketing scholars (e.g., Bucklin 1977,1978b, Ingene and Lusch 1981, Ingene 1982) have extended this general line of reasoning by incorporating similar behavioral elements in their justifications of the patterns observed in empirical research. However, most of these assumptions and implicit hypotheses, attributed to behavior of the firm(s) in the marketplace, have not been empirically tested in the previous literature.

The following research hypotheses are posed in order to determine if, and to what extent, some of these implied linkages exist at the level of individual retail units. Exhibit 20 provides a path analytic schemata which summarize the proposed relationships.

H-5: Managerial and marketing effectiveness in a retail unit is higher:

1. the greater the overstoring; and
2. the higher the competitive intensity in the market.

H-6: The managerial effectiveness in a retail unit is higher:

1. the higher the demand potential; and
2. the higher the rate of demand growth in the market.

H-7: Managerial expertness has a positive influence on managerial effectiveness.

H-8: Managerial effectiveness has a positive influence on the effectiveness of the marketing effort.

The positive link from competitive conditions to store performance, according to the behavioral paradigm, hinges on a series of implicit assumptions in the "ability of stores, in growth areas, to attract the best managers"

(H-6), and in "stiff competition bringing about greater discipline in both employees and management" (H-5 and H-8) (cf., Bucklin 1978b, p.90-91, Ingene 1982, p.82). Hypothesis-7, in this regard, follows as a corollary. Collectively, the network of relationships above and the hypotheses advanced in the previous sections provide an explication of the general mode of reasoning implicit in the behavioral paradigm.

The relative size of unit, as a manifestation of a strategic decision made at the time of market entry, to a certain extent does overlap with the structural/competitive conditions in the marketplace. For example, if one were to assume a fairly uniform space utilization or space productivity across all competitors, operationalization of such a variable would probably approximate relative market shares in the market. This is, however, neither implied nor assumed in this study. It is proposed that:

H-9: The greater the relative size of a retail unit in the market:

1. the higher the managerial effectiveness; and
2. the higher the marketing effectiveness for the unit.

The expectation here is that retail units which have a differential capacity advantage over their main competitors

EXHIBIT 20

The Proposed Relationships Between Market Conditions And Elements Of Unit Conduct

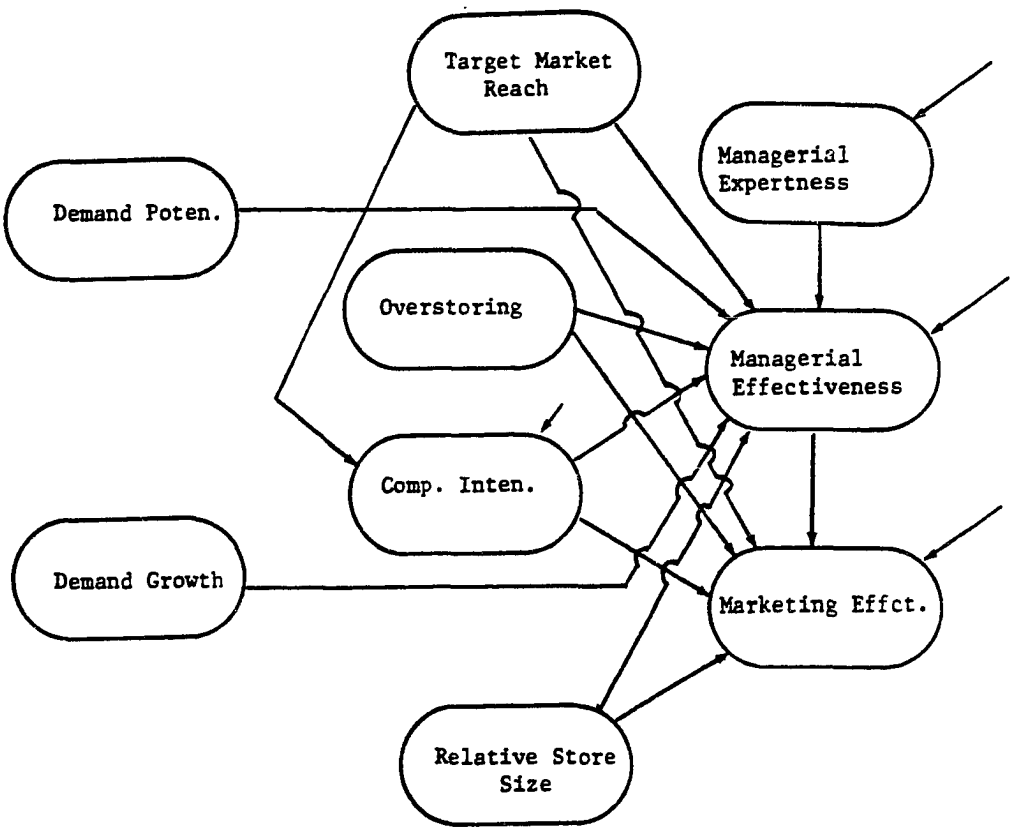

would have a major resource flexibility (in store space), which could be adjusted as the demand and supply conditions vary over time. Further, such a posture in the marketplace would also reduce the impact of competitive intensity, and hence, favorably impact the effectiveness of marketing and managerial effort.

Target market reach, the second strategic decisions variable, also has some overlaps with the elements of market (demand) conditions. The assumption here is that all retail units, by strategic choice or otherwise, have identified a "relevant" or "target" demand base (Alderson 1965). However, through time this initial "base business," may or may not coincide with the current configuration of demand in marketplace. Of course, to the extent such "market-matching" continues to be in force, a retail unit would be expected to have a relatively "insulated" position in the market from competitive pressures. Furthermore, when the target demand base comprises a significant portion of the total demand base, the unit would also be expected to have a unique advantage as "preferred source" for service outputs.

A negative association between market matching and competitive intensity, in this regard, would lend empirical support to the "market matching-insulation" speculation. On the other hand, a positive association between target market

reach and effectiveness of marketing and management effort would give credence to "preferred source" conjecture. The following research hypotheses summarize the expected relationships among these factors:

H-10: The greater the target market reach of a retail unit:

1. the higher the managerial effectiveness; and
2. the higher the marketing effectiveness.

H-10A: The target market reach of a retail unit is expected to have an inverse relationship to competitive intensity in the marketplace.

The Relations Between Conduct Elements And Store Performance

The last set of nonobservational research hypotheses concern the relationships between various elements of store conduct and the performance of the retail unit. Performance, as the central theoretical construct in this research, refers to the composite economic and/or financial outcomes of a store's operations. In this regard, the performance concept, similar to the notion of marketing effectiveness discussed earlier, represents a higher order construct.[106] However, although the preceding definition of

[106] There is an increasing recognition in all areas of social science research that a rigid dichotomy between

the term delineates the major dimension of interest, it does not lend itself to a direct operationalization.[107]

In order to overcome the operationalization problem and to further explicate the meaning of the construct, two other concepts derived from the general notion of economic performance are used in this research. The first of these, the store Productivity, refers to the rate at which the resources employed in a retail unit are combined and converted to outputs. The second derived concept, store Profitability, is defined as the degree to which the outputs of the retail unit, valued at current prices, exceed their costs.

The two derived notions, as Bucklin (1978b) notes, are closely interrelated:

> Although productivity and profitability are fundamentally different concepts, there is nevertheless an important association between the two. In particular, the productivity level of the firm or other economic unit is positively

---

unobservable and observable terms is untenable (Bentler 1982, Bagozzi 1984). Bagozzi, for example, argues that there are "three" types of unobservables and "two" kinds of observables. One of the unobservables, according to Bagozzi (1984) is an "unobservable in principle, and includes certain primitives and theoretical terms not subject to observation in even indirect, inferential ways" (p.23). Performance, as a global construct, probably fits this description. However, specific dimensions of performance, as defined above, are certainly amenable to indirect observation.

[107] Operationalization, in this context, refers more to further "explication" of a concept, rather than the traditional use of the term as an "empirical definition."

associated with the degree of profitability (p.3)

The association between these two concepts is more evident when profitability is also expressed as a "rate" notion (i.e., "Revenues/Costs" as opposed to the "spread" notion implied by "Revenues-Costs"). Consider, for example, the following algebraic representation, frequently used to highlight the distinction between these two concepts:

$$R/C = (O/I) * (Po/Pi)$$

Where:

R: Revenues or Sales

C: Costs

O: Physical Outputs

I: Physical Inputs

Po: Unit Price of Outputs

Pi: Unit Price of Inputs

According to this formulation, profitability is indeed a direct positive function of the efficiency of physical resource use (O/I). Further, if "terms of trade," (Po/Pi), is assumed to be relatively constant in the short run, profitability in such a case becomes an algebraic multiple of resource efficiency. In other words, the two concepts converge in their operational definitions.[108] Despite this

[108] More will be said on the empirical measures of these constructs in the next chapter. For the purposes of the present discussion, the term performance is used to

close conceptual and operational association, previous studies of retailing performance have followed somewhat different research orientations in relating the elements of unit conduct to store performance.

Productivity studies, representing more of a structuralist research orientation, have primarily investigated the relationships between elements of market conditions and "labor" productivity (e.g., Hall et al 1961, Schartzman 1971, George 1966, Bucklin 1977,1978b, Ingene 1982,1983c). Although there is frequent reference to conduct elements in these studies, the nature of the proposed relationships between these elements and store performance are often entangled in the structural or competitive conditions in/of retail markets.

In a recent investigation of the "impact of market forces on labor productivity," for example, Ingene (1982) has hypothesized that

> An increase in capital intensity in retailing in a geographical market, when store size and retail space saturation are held fixed, will increase labor productivity (p.81).

Hence capital intensity, as a manifestation of the level of technology employed in a retail market, represents an attribute of the nature of supply or competitive conditions. However, as Ingene (1982) further noted, capital intensity also

---

refer to both derived concepts simultaneously.

> reflects the macro level outcomes of investment and personnel decisions made by individual retail establishments... resulting from any one or a combination of four events: [a] The labor market may be tight, causing retailers to hire fewer employees; [b] Retailers may choose to offer less personal service; [c] Retailers may be open fewer hours; [and] [d] Retailers may possess better technology thus they would need fewer employees (p.81).

Aside from the tautological argument presented by (d) above,[109] it is difficult to make a clear distinction between capital intensity as a "structural/competitive condition" in the marketplace versus capital intensity as a "behavioral response" by retail units. This situation, of course, is not unique to Ingene's work (cf., George and Ward 1973, Tekeuchi and Bucklin 1977).

In profitability studies, the approach taken is generally more direct. These studies, with more of a behavioral orientation, have often focused on the influence of various strategic and operational decision elements (e.g., actual or perceived characteristics of store facilities or services, locational and managerial factors) on the sales volume, expenses and profit margins of retail units (e.g., Kinney 1969, Dalyrmple 1966, LaLonde 1962, Cottrell 1973, Clawson 1974, Morey et al 1983, Curhan et al 1983). Despite the ready availability of data at the level of the firm, however, the profitability studies are

---

[109] That is, the level of technology present in the market to be due to retailers possessing such technology.

generally oriented toward building forecasting models, and hence, in most cases lack the conceptual emphasis of productivity studies. In most cases, these studies can be characterized as "data driven" where the inclusion of variables into statistical models are dictated by their availability or the exigencies of the individual investigations, rather than their substantive "explanatory" value. Collectively, these disparate research programs parallel the duality among the industrial organization research and Harvard studies in enterprise performance (see Chapter 3). The research paradigm and the definitional scheme adopted in this study aims to bring the general thrust of these two orientations together. The proposed relationships between conduct elements and store performance are summarized in a series of research hypotheses below. Exhibit 21 provides a path analytic schemata of the proposed linkages.

H-11: The level of retail store performance is higher;

1. the higher the effectiveness of marketing and managerial effort;
2. the higher the expertness of store management and/or manager(s);
3. the greater the target market reach, and
4. the larger the relative size of the retail unit in the marketplace.

The effectiveness of marketing effort, it will be recalled, represents a higher order construct which embodies a number of subdimensions related to various store level decisions. In the previous profitability studies, these subdimensions and their relationships to various measures of store performance have been a primary focus of analysis (e.g., Hansen and Weinberg 1979, Morey 1980). Productivity studies, on the other hand, due in part to a lack of primary data, have often resorted to rather distant proxies for the same dimensions (e.g., wage rate as a measure of quality of employees or service, population growth as a measure of store atmospherics, etc., see Ingene 1982, 1983). More importantly, however, the emerging body of thought and empirical research from retail patronage studies suggest that it is the cumulative impact of these attributes which generally leads to differential patronage of stores, and hence, to favorable store performance (e.g., Tigert 1983, Ring et al 1980).

The conceptualization developed in this study, with the aid of a structural equations methodology, offers a way to assess these influences simultaneously (i.e., individual and collective effects). In this regard, the proposed "direct" link between marketing effectiveness and store performance may be thought of as the "cumulative impact hypothesis" from the more recent retail patronage

EXHIBIT 21

The Proposed Relationships Between Elements Of Unit Conduct And Unit Performance

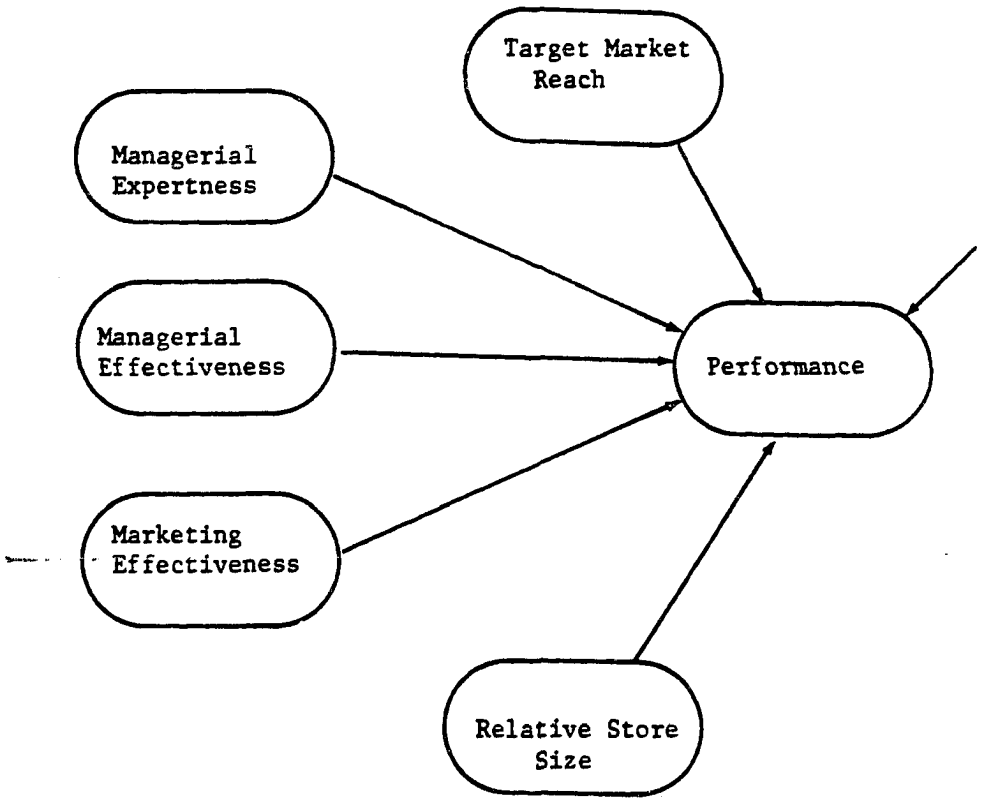

literature. At the same time, through the more "operational" dimensions (e.g., locational convenience, customer service, etc.), one may also be able to assess the "indirect" influences of each subdimension on store performance individually.

The two variables which describe the "quality of store management," (i.e., the managerial expertness and effectiveness), are closely interrelated, yet are distinct concepts. Although intuitively one would expect expertness of the store management to be a positive influence on the effectiveness of managerial effort, in time, a causal influence in the reverse order is also plausible. Despite the difficulties in ordering the nature of influences among the two concepts, their individual associations with store performance are relatively straightforward. Hypothesis-11.2 simply states that retail stores which are staffed with managerial personnel who have greater experience and training in a particular market location, and in retailing in general, are expected to have a higher level of performance than otherwise. Similarly, the second part of H-11.1 states that the performance of retail units will be higher, when stores are staffed with manager(s) who have differential ability, for example, in making rapid decisions, monitoring the market conditions, facilitating information exchange with the higher management, etc.

Target market reach and the relative size of the retail unit in the marketplace are the outcomes of strategic decisions which are relatively irreversable in the short run. With the former concept, we refer to the degree to which the present posture or position of the unit "fits" with the demand base it was intended to exploit at the time of market entry. Hence, it is expected that retail units which continue to operate under favorable demand conditions in their relevant market will perform at a higher level than otherwise. The relative size of the unit in the marketplace, as a measure of the differential advantage due to larger capacity for both merchandise and service offer, is also expected to have a positive influence on store performance. It should be noted, however, that the proposed link implied here is not one between the size of store, per se, and store performance, but rather that of "relative" unit size and unit performance. Whereas, the former relationship is the traditional view on scale economies, the latter conceptualization provides an assessment of an aspect of differential competitive advantage in the marketplace.

The Proposed Model Of Retail Store Performance-- A Summary

Although each of the "individual" relationships advanced in the previous sections have some degree of "face validity," it is important to note that their value lies not so much in the proposed one-to-one associations, but rather in the role they play within the overall "network of relations." Hence, whereas an empirical corroboration or falsification of each link may give some evidence for the existence or absence of a simple association, one gains an understanding of the overall phenomena only through the network of these relationships. In this final section, therefore, it is appropriate to briefly summarize the general thrust of this network.

The model advanced in this study posits that the economic performance (i.e., profitability and productivity) of a retail unit is a direct function of the elements of store conduct (e.g., effectiveness of managerial and marketing effort), which in turn, are a function of the various demand and supply conditions in the marketplace (e.g, potential and growth of demand, level of competitive intensity). Stated alternatively, it is proposed that the level, potential and growth of demand have a "primary" influence on the degree of overstoring and competitive intensity in the trade area, which collectively create a market environment within which the retail units operate.

Hence, to the extent economic results are a direct outcome of retail unit operations, these market forces do have an "indirect" influence on store performance.

In the conceptualization of this study, the conduct of a retail unit is viewed as emanating from a series of strategic and tactical decisions made, in response and adjustment to these and other market conditions. In many cases, however, the distinction between tactical and strategic decisions are not only difficult to make, but they are also overlapping in a retail setting. For example, effectiveness of marketing effort, as an aggregate response of the unit to the competition in the marketplace, is comprised of both strategic and tactical elements. Similarly, the target market reach of a unit, as a strategic locational response of the unit, overlaps with some of the elements of market demand.

Clearly, the proposed model is a highly simplified account of the realities of both the retail marketplace and of the retail unit itself. Neither the variables conceptualized nor the linkages specified in this study are exhaustive or complete. There is, for example, little doubt that the collective actions or responses of the retail units are the ultimate determinants of the nature and intensity of competition, and in time, of the overstoring in retail markets. In a similar vein, one may legitimately argue that

EXHIBIT 22

Structure Of The Proposed Model For The Explanation Of Retail Store Performance

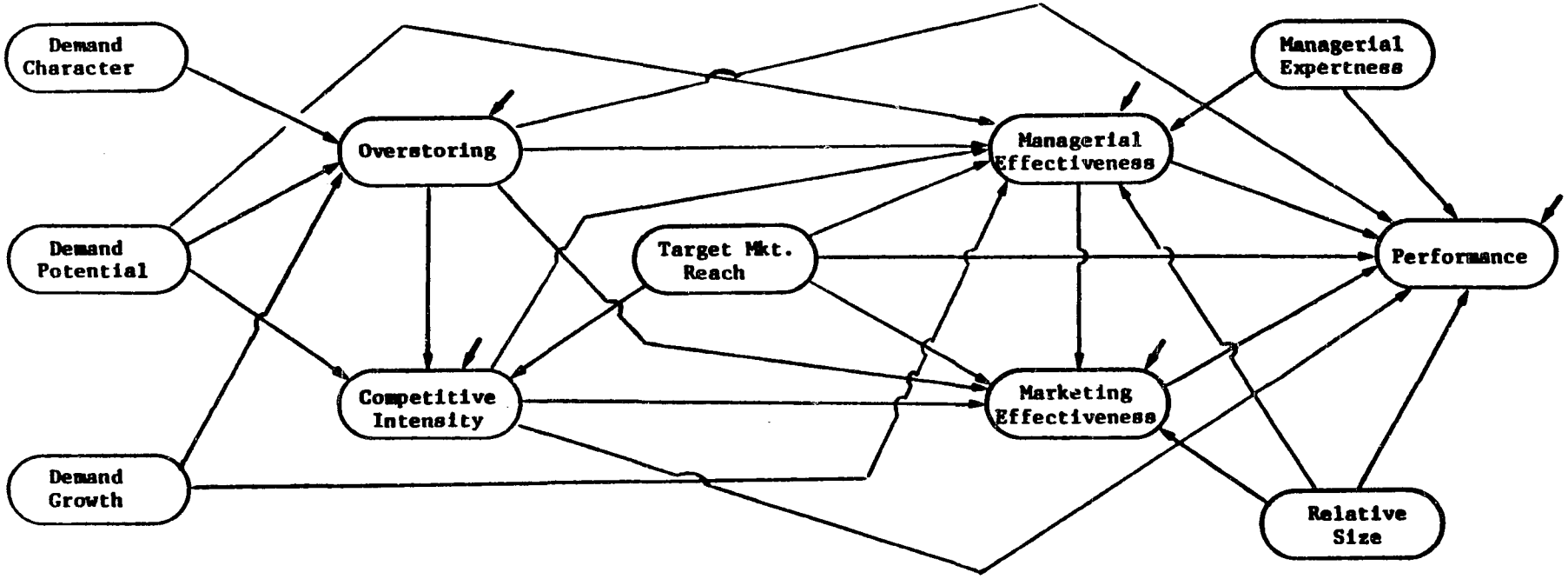

the actual or potential level of performance influences the actions of the unit itself, as well as the actions of the present or future competitors in the marketplace. These and other relationships which are not entertained here, of course, are limitations which need to be acknowledged.

Exhibit 22 provides a summary of all the primary structural relations advanced in this study. Collectively, these relationships comprise a general model for the explanation of retail store performance. Each of the arrows originating from an ellipse and ending in another, corresponds to a specific research hypothesis listed in one of the previous sections. The arrows which originate independently and point to an ellipse signify all other possible factors which are not explicitly modeled. Finally, it should be noted that all of the concepts labelled in the ellipses are "unobservable" variables. These variables are typically associated with one or more indicators which are described in the next chapter. For simplicity, these secondary structural relations are omitted from the Exhibit.

CHAPTER V

RESEARCH INSTRUMENTS, EMPIRICAL DEFINITIONS AND THE STATISTICAL RESEARCH METHODOLOGY

The nonobservational research hypotheses advanced in the previous chapter were aimed at generating the primary structural relationships entertained in this study. These relationships, however, are not empirically testable without formal connections to observable, manifest variables. In this chapter, therefore, the attention is focused on the formal rules of correspondence which link the constituent elements of the proposed model to a series of empirical definitions. It is important to note that these secondary links are also "structural relations," and hence, form a set of auxiliary hypotheses. Both sets of relationships are empirically tested in the next chapter.

Organization Of The Chapter

The chapter is organized around four sections. In the next two sections, the sampling domain and the research instruments are described, and the design of research is outlined. Next, following a brief discussion on the meaning and importance of correspondence rules, the empirical definitions for each of the concepts are presented. The chapter concludes with an overview of the statistical methodology employed in empirical research.

The Sampling Domain

The data sources used in this reserch are derived from a comprehensive market research study that was conducted for a regional, general merchandise chain in the U.S. The general scope of this study, including some of the areas investigated for the company,[110] are summarized in Exhibit 23. The shaded areas in this Exhibit indicate the portions of the overall market research which form the primary focus of empirical analyses in the present study.

The empirical research reported here involves nearly 250 retail units of the company. The statistical analyses, however, are limited to a subset of 211 retail stores for which continuous and complete data for fiscal years 1979, 1980 and 1981 were available for each of the units.

All of the company stores are in a relatively homogeneous three state area, located nearly equally in metropolitan (i.e., SMSAs) and nonmetropolitan markets. Metropolitan market stores typically operate in neighborhood or strip shopping centers, while the stores in nonmetropolitan markets are often found in downtown shopping areas. Regardless of market location, the older units of the company are of relatively small size, averaging 7,000 to 10,000 square feet of selling area, whereas the newer units

---

[110] Throughout the discussion, "the company" refers to the corporate entity, and "the store or unit" refer to the individual retail establishments of the company.

EXHIBIT 23

The Scope Of The Market Research Study

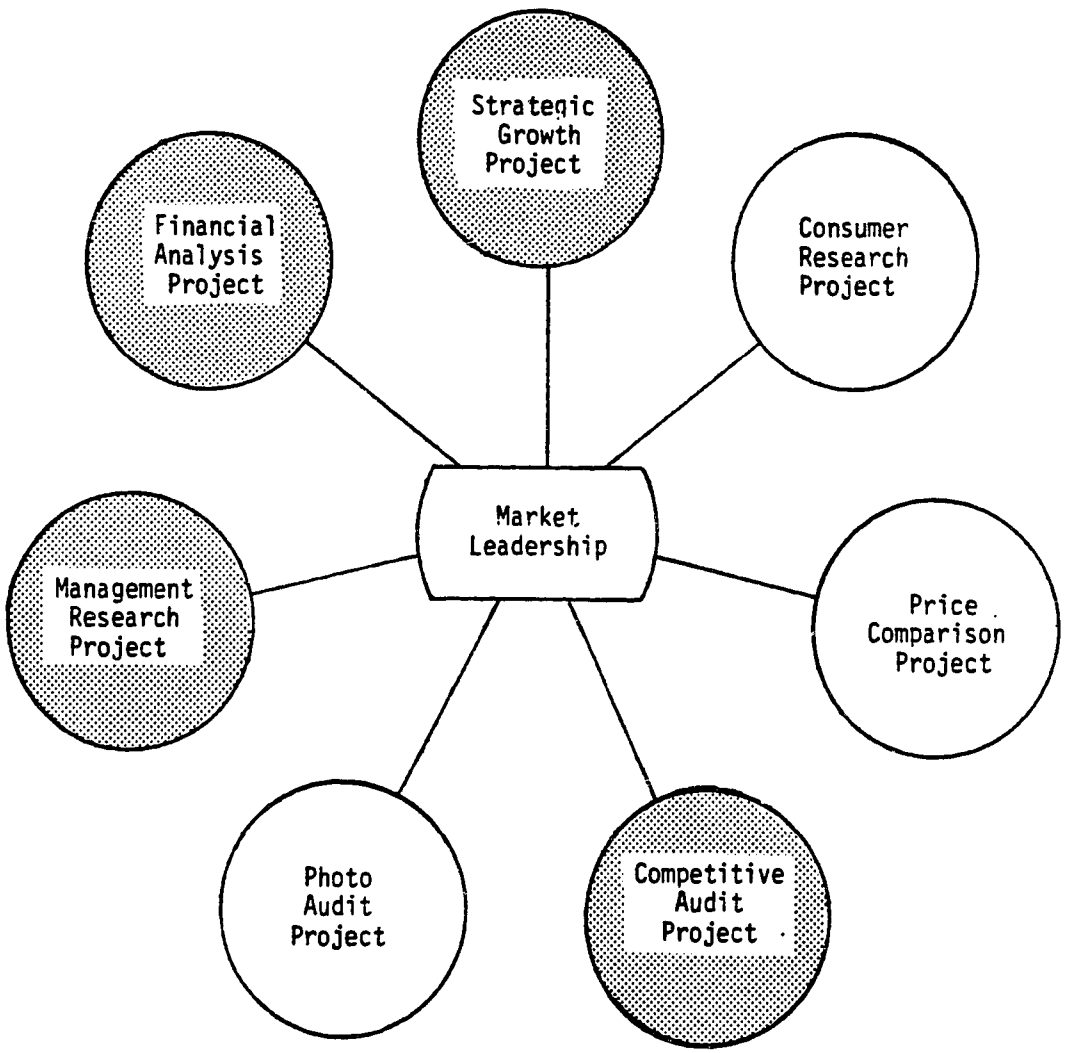

are larger, averaging 15,000 to 25,000 square feet.

Each store offers a wide range of nonfood, general merchandise items and a limited line of small household appliances and seasonal house and garden supplies. Both the merchandise and service mix and the departmental configuration of the stores are fairly uniform. Most of the stores are outfitted with gondola type, relatively low height display units, which give the stores an open, uncluttered look and a fairly low inventory investment.

Almost all the retail units of the company operate in a rather limited trading area, primarily oriented towards providing a convenient location for frequent, small transaction size purchases. The predominant mode of out-store promotion for the units consists of either direct mail advertising circulars or inserts in local papers, supplemented by radio advertising.

Each store is staffed by a store manager, with some stores also having one or more assistant managers, depending on store size and volume. A district supervisor closely monitors the operations of a group of 10-20 units and reports directly to senior management. Exhibit 24 provides a summary of the operating characteristics for a typical metropolitan and nonmetropolitan store.[111]

---

[111] On the request of the top management and in order to preserve the confidentiality of the sample stores and the company, no specific financial information is disclosed here or elsewhere in this study.

EXHIBIT 24

The Operating Profile Of The Sample Stores

Store Characteristics	Metropolitan Stores (112)	Nonmetropolitan Stores (99)
Number of Part-Time Employees	3.5	2.5
Number of Full-Time Employees	9.9	8.9
Average Hourly Wage	$3.40	$3.40
Square Feet Of Selling Area	10,696	9,452
Square Feet Of Total Space	12,298	10,994
Number of Customer Checkout Counters	3.9	3.5
Number of Customer Parking Spaces	44	32
Age Of Store	18	18
Percent Of Stores Remodeled	50.0%	56.6%
Number of Years Since Last Remodeling	9 years	7 years
Number Of Hours Store Open Per Week	64 hours	58 hours
Net Sales Per Customer Checkout Counter	$162,577	$174,190
Net Sales Per Store Hour	$ 186	$199
Inventory Investment	$138,916	$128,965
Break-Even Sales As A Percent Of Current Sales	89.7%	82.3%

The Research Design And Instruments

The design of this research is nonexperimental and may be broadly classifed as a cross-sectional field study. The research instruments consist of a series of field surveys and secondary data obtained from the 1980 U.S. Census of Population and Housing at the trade area level. All field surveys and the economic/demographic data for the trading areas of the retail units were collected in the spring and summer of 1982. The survey instruments were specifically designed, in collaboration with the executives of the company, to be used in this research.

The trading area of a unit was defined as the geographical area from which the unit derives seventy percent or more of its revenues. According to this general criterion, the trading area of each unit was evaluated, with the senior executives of the company, on a store by store basis. Data from a number of independent firms for a limited sample of stores were obtained to compare the consistency of the economic/demographic data computed with different algorithms.[112] Operationally, it was decided that for metropolitan area stores, the trading area consisted of a circular geography of one-and-one half miles radius with

---

[112] These stores were selected with a fairly well a priori knowledge of the existing trade area characteristics.

the unit at the locus of the circle. For nonmetropolitan stores, it was determined that either the MCD,[113] place or city limits data gave a fairly accurate representation of the trading area for almost all retail units.[114]

A copy of the research instruments, along with the accompanying cover letters and instructions, are reproduced in Appendix-C. A sample report which describes the data items obtained from the trade area geography is also included in this Appendix. The following is a brief description of these instruments.

The Survey Of Store Operations Data Form (SOSO) is designed to provide base-line information on the operational and financial statistics of each retail unit for the most recent three years (1979-1981) of operation. Items from this survey are primarily used to operationalize the performance, i.e., profitability and productivity of the units. A number of conduct elements (e.g., capital and advertising intensity), although not explicitly tested in the present study, can also be derived from this instrument.

---

[113] Minor Civil Divisions (MCDs) are primary divisions of counties established under State law. In some states, all incorporated places are also MCD's. In other states, incorporated places are subordinate to or part of the MCD's in which they are located.

[114] For all metropolitan area stores similar data for three and five mile radii, and for some nonmetropolitan stores, one-and-one half and three miles circular geographies were also obtained. However, in the present study, only the operational definitions described above are used in statistical analyses.

All the data for this survey instrument were hand-coded from the internal records of the company.

The Survey of Managerial Effectiveness Data Form (SOME) is designed to provide an assessment of the effectiveness of management, as perceived by the immediate supervisors of the retail unit. This research instrument also provides key background data for each of the store managers compiled from the company records. These data forms, precoded with the store number and the name of the unit manager, were distributed to the district supervisors in a midyear staff meeting. Each supervisor executed approximately 10-15 data forms, covering the units under his or her responsibility in the past several years. Approximately 15 forms which had a disproportionate amount of "aye" or "nay" type of responses were returned to the supervisors for reexecution at a later time.

The Competitive Audit Data Form (CA) is designed to provide detailed information on the nature of competition in each trading area as well as an overall measure of the attractiveness or potential of the market area. The survey instrument also provides a subjective rating of each store vis-a-vis the top competitor on 20 key attributes. The CA data form was sent to individual store managers to be completed per instructions attached to a cover letter. The trade area boundries for each unit was predefined and

precoded on all forms. All the returns were individually reviewed by the researcher and the district supervisors for missing or miscoded items. Where necessary, the data form was sent back to the store manager for reexecution in order to assure complete and accurate responses.

Nineteen eighty U.S. Census of Population and Housing (CPH) data were obtained from a private firm which commercially supplies current demographics for trading areas. The STF-2 data files of the most recent census were used to compile the figures. This file, and the reports generated for use in this research, contained detailed complete-count population and housing data for each unit's trading area. Identical data items for the 1970 census, on comparable geographical definitions, were also obtained. Depending on a priori classification of the units (as an SMSA or Rural store), the data from this source contained extensive information on the socio-economic structure of the trading areas for 1 and 1/2, 3 and 5 mile rings or on an MCD, place or city limits bases.

Collectively, these research instruments comprise the general data base that are used to empirically define the theoretical and derived concepts described in the previous chapter.

Correspondence Rules And Empirical Definitions

In the previous chapter, the meaning of the constituent elements of the proposed model were provided by the semantic content of the terms used in their definitions. The conceptual meaning of theoretical terms, however, are distinct from their empirical meanings, which are formally provided through a set of correspondence rules.

Correspondence rules describe the process through which theoretical, latent variables are given observational or empirical content. Bagozzi (1984) identifies three formal models of correspondence rules in scientific inquiry: the operational definition model, the partial interpretation model, and the causal indicator model.

The operational definition model has been the most commonly used correspondence rule in previous studies of retailing performance (see Chapters 2 and 4). According to this model

> we mean by any concept nothing more than a set of operations; the concept is synonymous with the corresponding set of operations (Bridgman 1927, p.5)

The shortcomings of this model are well known and demonstrated elsewhere (e.g., Bagozzi 1980b,1984, Hunt 1983, Blalock 1968,1982) and need not be repeated here.

The partial interpretation model of correspondence rules provides for multiple operationalizations of theoretical terms but does not allow such terms to have

semantic content over and above that provided by the empirical definitions. Hence, although the partial interpretation model is an improvement over the operational model, it similarly implies "a change in the meaning of a construct" when there is a change in the measurement procedure for the indicator variables (Bagozzi 1984, p.22).

The formal correspondence rule adopted in this study, the causal indicator model, is an extension of the partial interpretation model. In this conception, correspondence rules are viewed as causal links specified between the theoretical term(s), a test operation(s) and its result(s). More specifically, in causal indicator model:

> A phenomenon or state represented by a theoretical term is thought to imply or explain observations. The correspondence rule, then, functions as a scientific law linking theoretical term to experimental test procedure to observed results... (hence) correspondence rule is not part of the theory or the observations to which it is linked. Rather it is an auxiliary hypothesis concerning theoretical mechanisms existing between theoretical terms and observations (Bagozzi 1984, p.22)

An important property of the causal indicator model is that the theoretical and derived notions are assumed to have an independent semantic interpretation, apart from the empirical content assigned to them in any given context. Hence, it is possible for constituent elements in a theoretical network to be operationalized in different ways across different studies, since the relationships of

interest are generally not the ones between the indicator variables, but those between the latent constructs. To the extent it can be demonstrated that the manifest variables are reliable and valid measures of the concepts in question, and further, that there is theoretical or conceptual support for the proposed linkages, similar relationships between the concepts should hold regardless of the specific empirical content provided by the observational variables.

To illustrate, consider for example the relationship hypothesized between target market reach and performance. Both of these constructs can conceivably be operationalized in ways that are different from the ones adopted in this study. In fact, target market reach, as it is conceptualized and defined in the preceding chapter, would be "expected" to have different operational definitions across different retail units. Similarly, the economic performance of the unit can be empirically defined in various ways. However, the intent here is not to "find" a simple empirical association between any two measures, but to assess the influence or importance of a firm's position resulting from a strategic locational decision on the aggregate economic outcomes.

Exhibit 25 provides a summary of the empirical measures for all the latent or unobservable concepts defined in Chapter 4. In the balance of this section these measures

are defined and some of the issues in their operationalizations are briefly reviewed.

Empirical Definitions Of The Performance Construct

The economic performance of a retail unit is represented through two derived concepts (productivity and profitability), and five empirical measures. All empirical measures are obtained from the company's internal records via the Survey of Store Operations (SOSO) data form (see, Appendix-C). All the data items are for the 1981 fiscal year.

Productivity of the unit is represented by three conventional measures:

1. NSTSA: Net sales per square foot of selling area
2. NSTIN: Net sales per dollar of (average) inventory investment
3. NSTFE: Net sales per full-time equivalent employee

In all the operationalizations, net sales is conceived as a measure of aggregate retail outputs. Three alternative measures of retail outputs:

1. Gross Margin, as a close approximation of value added,
2. Contribution Margin, operationally defined as the gross margin less the corporate overhead allocated to the unit, and

EXHIBIT 25

The Empirical Definitions Of The Latent Variables

Latent Constructs	Mnemonic	Empirical Definitions
1. Productivity	NSTSA	Sales per square foot of selling space
	NSTIN	Sales per dollar of average inventory
	NSTFE	Sales per full-time equivalent employee
2. Profitability	NPBT	Net profit before tax as a percent of sales
	ROCA	Contribution margin return on controllable assets
3. Managerial Effectiveness	MGREFF	7-Likert scale items from SOME-A
	MGRSKL	7-Likert scale items from SOME-A
	MGRACH	5-Likert scale items from SOME-A
	MGRSAT	8-Semantic Scale from SOME-A
4. Managerial Expertness	MGRYRS	Tenure (yrs) of manager
	MGRRTL	Manager's (yrs) retail experience
5. Marketing Effectiveness	LOCAT	2-Semantic scale items from CA-5
	SERVC	5-Semantic scale items from CA-5
	OFFER	7-Semantic scale items from CA-5
	ATMOS	5-Semantic scale items from CA-5

SOME: Survey of Managerial Effectiveness
CA : Competitive Audit Data Form

EXHIBIT 25

The Empirical Definitions Of The Latent Variables (Cont.)

Latent Constructs	Mnemonic	Empirical Definitions
6. Competitive Intensity	DDSTRS	Number of discount department stores
	INTCPT1	Proportion of intercept competitors (number)
	INTCPT2	Proportion of intercept competitors (size)
7. Relative Overstoring	SPCPHH	Total retail space per household
8. Relative Size of Unit	CSTCS	Most relevant competitor's total space to unit's total selling area
9. Target Market Reach	MINORS	Percent of minorities
	CHLD14	Percent of children age 14 or younger
	INC14M	Percent of households with income $14m or less
10. (Character Of) Market Demand	AVGINC	Average household income
	AVGHSV	Average housing value
	AVGRTV	Average rent value
11. (Potential Of) Market Demand	TINCHH	Total personal income
	TRNTVA	Total value of rents
	THSNVA	Total value of housing
12. Market Growth	TINCGH	Annual rate of income growth-1
	TINCGP	Annual rate of income growth-2
	POPG	Annual rate of population growth

3. Three year average of net sales to smooth the yearly fluctuations,

were also considered. The product-moment correlations among the ratios computed with these operationalizations and the one used above (i.e., net sales) are all in excess of .90, and give the same statistical conclusions with respect to the other dependent and independent variables. Similarly, an alternative measure of NSTSA in "net sales per linear foot of shelf space," and of NSTFE in "net sales per employee hours," were also highly correlated with the respective empirical definitions above, and hence, only the former are used.

A second set of performance measures empirically define the notion of store profitability through the following indicators:

1. NPBT: Net profits before corporate tax allocation expressed as a percent of sales
2. ROCA: Return (gross margin less direct controllable expenses) on controllable assets (average inventory plus replacement value of fixtures)

Although the profitability concept, in the definitional schemeta adopted in this study, represents a "spread" notion, it is necessary to "scale" the absolute difference between revenues and costs to have a common basis for

comparison across stores with different sales volumes.[115] This, however, algebraicly reduces the empirical definition of profitability to a rate notion similar to productivity measures and the two concepts converge in their operationalizations (see Chapter 4).

A common factor analysis using an oblique (promax) rotation of factor axes indicates the degree to which the two derived notions are intercorrelated. The simple correlation matrix, the target matrix for procrustean transformation and the rotated (oblique) factor "pattern" and "structure" are reproduced in Exhibit 26.

A scree plot of eigenvalues against the principal factors indicates that, with these 5 measures, there is only one interpretable factor accounting for 95.4 percent of the variation in the manifest variables. The interfactor correlations among dual notions of productivity and profitability also indicate a very close association between the two concepts (see Exhibit 26).

An analysis of the general pattern of the product moment and the squared multiple correlations for these set of indicators (not shown here), further suggests that the ROCA measure is a redundant indicator (with SMC = .99). A

---

[115] Selling space, dollar sales, expenses and inventory investment in stores are almost perfectly correlated. Hence high dollar profits for one unit, without such scaling, merely represents size differential and not the differential performance of the unit.

EXHIBIT 26

Results Of A Common F.A. On The Dimensionality Of The Performance Construct

Pearson product-moment correlations

	ROCA	NPBT	NSTSA	NSTFE	NSTIN
ROCA	1.000				
NPBT	.866	1.000			
NSTSA	.805	.697	1.000		
NSTFE	.712	.611	.670	1.000	
NSTIN	.898	.662	.759	.673	1.000

Target Matrix For Procrustean Transformation

	Factor 1	Factor 2
ROCA	.552	.423
NPBT	.112	1.000
NSTSA	.986	.124
NSTFE	.624	.361
NSTIN	1.000	.118

Rotated Factor Pattern (Std. Reg. Coeffs.)

	Factor 1	Factor 2
ROCA	.585	.486
NPBT	.056	.878
NSTSA	.763	.085
NSTFE	.469	.309
NSTIN	.870	.083

Rotated Factor Structure (Correlations)

	Factor 1	Factor 2
ROCA	.930	.707
NPBT	.824	.632
NSTSA	.933	.905
NSTFE	.690	.645
NSTIN	.686	.919

Interfactor correlation: .712

similar factor analysis with ROCA deleted from the computations yields an interfactor correlation of .78. Therefore, in the statistical analyses presented in the next chapter, the ROCA variable is deleted from the set of manifest variables and the four variables are taken to be indicators of a factor which may be labelled as "financial" performance.

Empirical Definitions Of The Conduct Constructs

The elements of store conduct in this study are restricted to five derived concepts, collectively represented by fourteen indicators. The two related notions, managerial effectiveness and managerial expertness, are operationalized using two instruments and two items from the Survey Of Managerial Effectiveness (SOME). The former concept is empirically defined through four indicators, and the latter concept is represented by two empirical measures.

The four indicators of managerial effectiveness are derived from the responses of district supervisors to the first two scales of the survey instrument[116] (see

[116] In the construction of these scales, there was an a priori expectation that certain items would cluster around subdimensions such as overall managerial ability, managerial skills, relations with supervisors, achievement orientation, etc. A common factor analysis of these items, however, indicated only three major subdimensions which collectively accounted for all the variation in the scale items. The scores above represent the summation of those items which had the highest loadings with the respective factor(s).

Appendix-C, Parts A and B of SOME):

1. MGREFF: Represents a summated score obtained from seven Likert (5-pt.) scale items (Questions, A: 1,3,5,9,12,15 and 16). These items concern the ability of the store manager in solving day-to-day store problems, adjusting to new situations in the marketplace, in coping with pressure or strain in the job, and monitoring demand and supply conditions in the marketplace.

2. MGRSKL: Represents a summated score obtained from seven Likert (5-pt.) scale items (Questions, A: 8,11,15,18,19, 21 and 22). Collectively, these items provide an overall measure of the work ethic, commitment and work practices of the manager within the unit and vis-a-vis the company.

3. MGRACH: Represents a summated score obtained from five Likert (5-pt.) scale items (Questions, A: 6,7,10,13 and 19). These items provide a measure of the general ability of the store manager to achieve the target goals and objectives set for the store by the company.

4. MGRSAT: Represents the final test condition, replicating the items from MGREFF through a seven item bi-polar semantic differential (7-pt.) scale (Questions, B: e,f,g,h,i,j and k). Here, instead of an evaluation of the manager with respect to key attributes, the district supervisor is asked to indicate the degree of his or her satisfaction with the manager on the same attributes.

The concept of managerial expertness is also operationalized through the same survey instrument (i.e., SOME) using two items:

1. MGRYRS: is the tenure (in number of years) of store manager in the unit in question, obtained from the company personnel records

2. MGRRTL: is the number of years that the store manager has worked in retailing (including his or her tenure as the store manager in the unit, in other stores of the company, and other firms in the industry).

Although the notion of managerial expertness has a distinct "conceptual" meaning, given the model for correspondence rules adopted in this study, the operationalization of this concept in these measures are somewhat problematic. According to the causal indicator model, the phenomenon in question (i.e., managerial expertness) is assumed to be "manifested" via a test operation (i.e., SOME data form), in the result(s) obtained (i.e., MGRYRS and MGRRTL). Hence, the implied direction of the "structural" links between the latent construct and observables are hypothesized to "run" from the former to the latter (i.e., effect or reflective indicator mode) (cf., Bollen 1981, Namboodiri et al 1975, Fornell and Bookstein 1982). Obviously a case can be made that the measures of managerial expertness, as they are defined above, may better fit the "cause" or "formative" indicator mode. In other words, years spent in retailing and/or store management may be thought of as indictors which "lead" one to acquire expertise, rather than manifestations of the same. In the tests of the statistical relations, it is useful to keep in mind these reservations.

A third element of unit conduct, the concept of marketing effectiveness, is measured by four indicators.

The four measures are constructed from a 20 item, bi-polar semantic differential (7-pt.) scale that was obtained from the responses of each store manager to Question 5 in the Competitive Audit Data Form.[117] The items for the semantic scale are developed in conjunction with those used in the consumer research survey (see Exhibit 23) in order to qualitatively assess the degree of key informant bias which may be present in these responses.[118]

An approximately equal number of items in the survey instrument were also randomly reversed in order to minimize 'aye/nay' responses, and further, all CA survey instruments were reviewed by the district supervisors to prevent miscodes, incomplete questionnaires, and other anomolies in their completion.

Ideally, a similar instrument would have been executed for a number of competitors in the trade area. However, due to the length of the survey instrument and other exigencies of the research, this strategy could not be

---

[117] Note that, by design, this scale elicits "reverse" responses in comparing the the most relevant competitor to the focal store. With the appropriate reversals of these items, a high combined score indicates a "higher" marketing effectiveness for the unit.

[118] The two scales used in the latter research involves a standard 22 item importance-performance analysis of the focal unit and a number of competitors on similar store attributes using a 1 to 10 rating scale. However, since the consumer survey was conducted in a limited number of metropolitan areas, the number of units which are common to both surveys are limited.

followed.[119] The four operationalizations of the marketing effectiveness construct are summarized below:[120]

1. LOCAT: Represents a 2 item summated score, measuring the degree of accessability and quality of store location compared to the most relevant competition in the trading area.

2. SERVC: Represents a 5 item summated score, measuring the level of service offered by the unit in relation to competition in the marketplace (e.g., employee service, parking facilities, customer checkout counters, etc.)

3. OFFER: Represents a 7 item summated score, measuring the level and quality of merchandise offer, (e.g., the relative price, quality, value, and the depth, selection, availability of national brands), in relation to those offered by the most relevant competition in the trade area.

4. ATMOS: Represents a 5 item summated score, measuring the quality of the store atmosphere, interior design, prestige and in-store displays in relation to the most relevant competition.

Of the two remaining elements of store conduct, the relative size of unit is operationalized by a single indicator, and the target market reach is empirically defined by three measures.

---

[119] The most relevant competition in the following operationalizations refer to the establishment which was perceived to be the top competitor of the unit in the market (see Question 4.a of CA).

[120] The delineation of item clusters here were also obtained through a common factor analysis of the above semantic differential scale.

The relative size of a unit is defined as the degree of differential capacity of a retail unit in relation to its main competitors in the marketplace. Conceivably, a large number of variables influence the "capacity" for retail outputs. In this regard, for example, the size of the unit, the reach and intensity of out-store advertising and promotion, the location and/or accessability of the unit, operating hours of the store and its design, are all relevant factors. Although indicators for each of these factors were available for the focal units in the sample, similar data points for the relevant competiton, with the exception of the first factor (i.e., the store size) could not be obtained. Hence, using the total unit space from SOSO, and the estimated gross leasable space for the relevant competitors from CA data form (Question 4:a-c), two ratio variables are constructed:

1. CSTCS: Representing the ratio of gross leasable space of the most relevant competitor in the trade area to the unit's total space

2. TSTCS: Representing the ratio of total gross leasable space of the most relevant "three" competitors in the trade area to the unit's total space.

In some trade areas, however, where there were less than three "top competitors," the variable TSTCS was not comparable across stores. In order to have the largest

possible sample size with a consistent measure for all stores, the former operationalization is retained as a single indicator of the concept.[121]

The last element, the target market reach of the unit, is measured through three indicators, obtained by combining a number of data points from the Census of Population and Housing. The company and its units, through the years and by design, have been strategically positioned to elicit differential patronage from a relevant consumer base. Although a detailed description of this customer base is available, due to the confidential nature of these data, no specific information is disclosed here. Suffice it to say that these consumers, in general, have relatively low incomes and are primarily convenience oriented households. These households are also less mobile, more store loyal and generally have a larger family size with more younger children than the average for all households in the trade area. The following are the three indicators of the target market reach of a focal unit:

1. MINORS: Represents the proportion of minorities in the trade area, as a percent of the total population.

---

[121] It should be noted that, in lieu of the conceptual definition of the relative size, the CSTCS measure here is a "reversed" operationalization. This should be kept in mind in the interpretation of the statistical results.

2. CHLD14: Represents the proportion of households with children age fourteen or younger, as a percent of the total households in the trade area.

3. INC14M: Represents the proportion of the households with an annual household income of $ 14,000 or less in the trade area.

Empirical Definitions Of Market Demand and Supply Constructs

The three elements of market demand and the two elements of supply conditions defined in Chapter 4 are collectively operationalized through thirteen indicators. The empirical measures of the three market demand variables are derived from the Census of Population and Housing. The indicators of supply conditions are obtained using data points from both the census data and the competitive audit data form. Both of these research instruments are based on similar trade area definitions across different retail units.

The elements of market demand and supply, partly because of the relatively aggregated nature of the theoretical notions involved, and partly due to the limited availability of data points from the Census reports at the time of this research, were the most difficult to operationalize. Furthermore, given the model for the correspondence rules adopted in this study, auxiliary theory formulation (i.e., the links between the theoretical concepts and empirical definitions) once again appears rather problematic.

The notion of market demand character, representing the degree of upscaledness or quality of demand is represented by three indicators:

1. AVGINC: is the estimated average income per household in the trade area
2. AVGHSV: is the estimated average housing value in the trade area
3. AVGRTV: is the estimated average rent value per apartment or housing unit in the trade area

In conformity with the causal interpretation model, it appears plausible to think that the quality of demand may indeed be "reflected" in higher rent and housing values in the marketplace. However, a similar argument for the third indicator (i.e., average household income) does not appear to fit the same model. In fact, it seems more reasonable to hypothesize that average income acts as a "cause" indicator, "leading to" the quality of demand in the market.

However, even if one were to assume that all measures fit the "reflective" indicator mode, additional complications exist. These issues concern the "clarity" of the "true underlying factor" which may be influencing the observed measures. For example, it is possible to speculate that high levels of rents and/or housing values in the marketplace may be partly or substantially due to a relative scarcity of housing. Hence, the aggregated nature of such

theoretical concepts bring along serious complications in operationalizations which are difficult to overcome.[122]

The concept of market demand potential, conceptually and in its indicators, is closely related to the preceding notion. Whereas the character of market demand provides an indication of the quality of buying power at the level of the "households," the potential market demand provides a measure of the total purchasing power by taking into account the total trade area population. Three empirical measures of potential market demand can be identified:

1. TINCHH: Represents the total trade area income, obtained as a product of average per capita income and population of trade area

2. TRTVAL: Represents the total dollar value of the rents, obtained as a product of average rental value and the number of rental units in the trade area

3. THSVAL: Represents the total housing value, obtained as a product of average home value and the number of homes in the trade area

---

[122] In many cases, the global nature of these constructs, conceivably all with multiple subdimensions, make it difficult to apply any one correspondence rule in its pure form. One possible way out of this difficulty is to try to fit several models to the same variance-covariance structure presented by the empirical measures and to observe the fit of these alternative models and to reformulate the auxiliary links accordingly. A number of illustrations using this approach are presented in the next chapter.

A similar problem concerning the true underlying factor which may account for the observed variables also exists here. Since the trade area boundries for stores located in metropolitan markets are defined uniformly for all units (i.e., one-and-one half miles radius), the preceding operationalizations lend themselves to another alternative interpretation in the "density of demand or population." If the latter concept (i.e., density) is the true underlying factor, it would not be surprising to find that the hypothesized relationship in (H-1.1) is reversed. In other words, while the higher level of demand potential is expected to have a conducive effect on overstoring of the markets, the density of population would be expected to have a depressive effect on the same.[123]

The rate of growth in potential demand in the trade area is operationalized in three indicators. The first two indicators measure the change in buying power on a per capita and household basis. The third indicator is a measure of population growth in the trade area:

1. TINCGH: The annual rate of growth in household incomes for the period 1970-1982.

---

[123] However, since the units located in nonmetropolitan areas are largely free of the problem brought about by the uniform geography definition, an assessment of such confounding may be possible by estimating the same set of relationships separately for metropolitan and nonmetropolitan stores.

2. TINCGP: The annual rate of growth in per capita income for the period 1970-1982.

3. POPG: The annual rate of growth in trade area population for the period 1970-1980.

Clearly, the growth in overall demand in a given geographical area is a function not only of the changes in income but also of the change in the size of the population. In this sense, it may be more appropriate to think of demand growth as a bidimensional construct, rather than an unidimensional phenomenon. In the statistical analyses, this bidimensionality can be represented in two derived notions of demand growth, first measuring the growth in incomes, and a second measuring the population growth.

The final two concepts in the theoretical framework deal with the nature of supply conditions. The first variable, the relative competitive intensity, refers to the overall strength of the rivalrous activity in the marketplace and is operationalized through three indicators:

1. DDSTRS: Represents the number of discount department stores in the trade area of each focal unit.

2. INTCPT1: Represents the proportion of the intercept competitors in the market as a percent of all competitors in the market.

3. INTCPT2: Represents the proportion of the retail space due to the intercept competitors as a percent of total retail space in the market.

In these measures, Intercept Competitors refer to units which fall under any one of four categories of retailers, such as combination stores, super-drug stores, catalog showrooms and discount retailers. These retail formats, as McCammon et al (1980) note "are a dislocative force in all of the markets in which they compete." Collectively, these stores also have a differential capacity advantage and a growing consumer franchise to divert a significant amount of traffic and volume from most traditional retail outlets. Hence, it is assumed that in markets where there is a disproportionate presence of such retailers, the competitive activity is higher than otherwise.

Finally, the notion of overstoring in a given market is operationalized by a single measure:

1. SPCPHH: Represents the amount of total retail space per household in the trade area.

The theoretical definition of overstoring refers to the degree to which the capacity for service outputs may exceed the potential for market demand. In the above measure, the total retail space in a given trade area is assumed to give a fair approximation of capacity potential, and similarly, the number of households is assumed to be reflective of the potential for market demand in the marketplace.

The Statistical Research Methodology

In the Introduction, as well as in various other parts of the manuscript, it was repeatedly emphasized that previous studies of retailing or retail store performance have been overly simplistic both in measurement and in statistical analyses. More specifically, it was pointed out that a major shortcoming in this general area of inquiry was a lack of interest in assessing the reliability and validity of the research instruments.

Of course, since the major purpose of investigation in some of these studies is one of "exploration" or of formulating predictive, forecasting models, the questions of validity or reliability are of little or no significance (e.g., Kinney 1969, Cottrell 1973, Hise et al 1981, Clawson 1974). However, in other studies, where the major objective of the research is to establish structural links among variables and of inferring a series of causal or "explanatory" relations (e.g., George and Ward 1973, Bucklin 1977,1978b, Takeuchi and Bucklin 1977, Ingene 1982,1983c), statistical tools which are based upon conventional regression analysis are at best deficient, and at worst, simply not appropriate (Goldberger 1973, p.1). In this regard, ordinary least squares (OLS) regression and other correlational analyses are especially inadequate statistical tools, since they neccessarily assume all constituent

elements to be perfectly measured, with no error, by their respective indicator(s).[124]

However discomforting it may be, the "fact of scientific life" is that measurement and other methodological errors are common in all areas of scientific research. Measurement errors, unfortunately, do not "go away" by assumption. Such an assumption is especially difficult to justify in social science research where measurement errors are typically the rule rather than the exception (Blalock 1969a,b,1979, Namboodiri et al 1975, Bagozzi and Phillips 1982, Bagozzi 1984).

Until recently, in marketing as well as in other social science disciplines, the standard practice has been one of formulating theoretical links in abstract terms, and then, testing the predictions from these theoretical links, using concrete observations typically provided by single empirical definitions. This conventional approach has a number of serious shortcomings in substantive hypotheses testing. As Bagozzi and Phillips (1982) have recently noted

> although there are well-developed criteria to guide the formulation of theory, and statistical and observational standards can be found to direct empirical analysis, the linkages between theoretical concepts and their measurement are often left unspecified or else stipulated in loose, unverifiable ways. This failure to

---

[124] Implications of such errors in parameter estimation in regression analysis is well known and need not be repeated here (see, for example, Namboodiri et al 1975, p.535-549 or Bagozzi 1980b, p.86-91).

> represent the degree of correspondence between measurements and the concepts undermines the test of the theory, [since] a hypothesis may be rejected because of [a] inadequate theory, [b] a lack of correspondence between measurements and the concepts that the measurements are intended to represent, and/or [c] excessive random error in measurements (p.459).

In order to represent the set of structural relations discussed in the previous chapter in a form that readily leads to parameter estimation and hypotheses testing, and where errors in measurement are specifically recognized in statistical analyses, it is useful to employ a structural equations methodology (Bagozzi 1976,1980b,1984, Blalock 1982, Bagozzi and Phillips 1982, Aaker and Bagozzi 1979). In this regard, structural equations modeling provides a powerful methodological paradigm which not only permits a direct assessment of the degree of correspondence between measurements and concepts (i.e, validity) and the errors in measurement (i.e., reliability), but more importantly, takes these relationships into account in the test of substantive research hypotheses.[125]

---

[125] Background material on structural equations modeling may be found in Duncan (1975), Bagozzi (1980b), and in Blalock (1964,1969b). A special issue of the Journal of Marketing Research, on Causal Modeling provides a number of current applications, including an article by Joreskog and Sorbom (1982) which summarizes the recent developments in the LISREL program. Several econometrics texts (e.g., Maddala 1977, Johnston 1972) give introductions, and a number of articles provide reviews of the literature (e.g., Goldberger 1971, Long 1976, Bielby and Hauser 1977). More advanced treatments of structural equations methodology can be found in Goldberger and Duncan (1973), Joreskog and Sorbom

Two closely related statistical methods for estimating the parameters in a structural equations framework with latent variables have been developed, one by Joreskog (1969,1973,1978) using the LISREL version of the ML (maximum likelihood) approach, and the other by Wold (1980) using the PLS (partial least squares) estimation technique. In general, the PLS analysis is simpler, since it does not require multinormal distributional properties for the observed variables, whereas ML approach requires such assumptions.[126] However, as Wold (1980) notes

> This parting of ways... is technical rather than real, for ML aims for optimal accuracy but PLS for consistency. Under regular conditions, ML and PLS estimates are co-consistent; so that there is no substantial difference between the two set of estimates (p.52).

In this study, the latest available version of the computer program developed by Joreskog and Sorbom (1983), LISREL (Release 6.3), is used. LISREL is a general program for estimating the coefficients in a set of linear structural equations which

---

(1979), Joreskog and Wold (1982), and in Wold and Joreskog (1982).

[126] In the marketing literature, examples of the LISREL approach can be found in Bagozzi (1977,1978,1980a,b), Aaker and Bagozzi (1979), Phillips (1981,1982) and Phillips et al (1983). For the PLS approach, examples can also be found in Fornell et al (1982), Fornell and Larcker (1981a), Fornell and Robinson (1983), and in Hui and Jagpal (1979). In two recent papers, Fornell and Bookstein (1982) and Joreskog and Wold (1982b) contrast and compare the two approaches.

> provides a statistical [maximum likelihood and unweighted least squares] solution to the problem of reconciling alternative estimates for overidentified path models containing observable and unobservable variables. The objective [with LISREL] is to reproduce the observed-variable covariance matrix as closely as possible, and to determine the goodness-of-fit of the model to the data (Fornell 1983, p.443).

Hence, the variables in the equation system with LISREL can be either directly observed variables (in which case a standard two or three stage linear regression is performed) or they may be latent variables which are not observed but related to other observed variables. The LISREL program is particularly designed to handle models with latent variables, measurement errors and reciprocal causation. In its most general form, the LISREL model assumes that there is a "causal" structure among a set of latent variables, and in turn, the latent variables appear as the underlying causes of the observed variables.[127]

A more detailed, nontechnical description of the LISREL methodology can be found in the User's Guide (Joreskog and Sorbom 1983), as well as in various other texts (e.g., Pedhazur 1982, Bollen 1983, Bagozzi 1980b). In general, LISREL requires a measurement and a structural model to be simultaneously specified for parameter estimation.[128] The measurement model specifies how the

---

[127] This is essentially the causal view of correspondence rules (Bagozzi 1980b, 1984, and Bagozzi and Phillips 1982).

theoretical and derived concepts are measured in terms of the observed variables and is used to assess the measurement properties (validities and reliabilities) of the observed variables (see Exhibit 25). The structural model, on the other hand, specifies the hypothesized relationships among the latent constructs, and is used to "describe" the causal effects and the amount of unexplained variance (see Exhibit 17).

Since a significant amount of research which uses structural equations modeling has already been accumulated in the marketing literature and elsewehere (see the preceding text and footnotes for references), no technical background is provided here. Issues relating to identification of structural equation models, and goodness-of-fit tests, as well as recent developments in overall assessment of fit of structural models[129] (e.g., incremental fit tests) will be discussed in the next chapter.

---

[128] Since both sets of equations are essentially structural links, a more appropriate description of these two models would be "latent variable model" and the "measurement or observed variable model" respectively (Bagozzi 1984, Bentler 1982).

[129] See, for example, Bentler and Bonett (1980), Sawyer and Page (1983), Fornell and Larcker (1981a,b,1984), Bagozzi (1981), Acito and Anderson (1984) for a discussion of methods and issues.

CHAPTER VI

RESULTS FROM STATISTICAL ANALYSES

In this chapter, the results from empirical, statistical analyses are summarized and the parameter estimates for several models of retail store performance are presented. Throughout the discussion, the proposed structural relations among the constituent elements and the measurement properties of these elements are evaluated simultaneously. In this regard, the rules of correspondence between the theoretical concepts and the observed variables form a set of "secondary structural linkages." Hence, the measurement properties of these concepts are also "hypotheses" that are explicitly tested in the process.

Organization Of The Chapter

This chapter is in three major sections. In the first section, the general framework used in the statistical analyses is described and the test statistics which are uniformly reported in the latter sections are defined. Next, the results from the statistical analyses of nonobservational research hypotheses are presented. In the final section, parameter estimates for a number of models of increasing complexity are summarized and discussed.

The General Framework Used In Hypotheses Testing

The purpose of this section is to provide a detailed outline of the general research strategy followed in the empirical analyses. The statistical methodology, test statistics, and other qualitative criteria defined and described below form the basis of discussion in the next two sections.

The LISREL methodology typically generates a wealth of statistical information which can quickly reach a point of diminishing returns. A significant part of this information is for diagnostic purposes, intended to be used in variously modifying the model(s) at hand. Throughout this chapter, the statistical results from LISREL analysis that are most relevant for the present discussion will be uniformly summarized in four key exhibits. The contents of these exhibits are briefly described below.

The General Format Of Presentation

In the forthcoming sections, the correlations which are input to statistical analyses are given as the first set of exhibits. Unless stated otherwise, in all the correlation matrices the (p) indicators (i.e., y-variables) of the endogenous (n) concepts are listed first, followed by the (q) indicators (i.e., x-variables) of the exogenous (ξ)

concepts.[130] The level of statistical significance obtained for all the elements are indicated on each of the matrices.[131] The Coefficients of Determination for the y and x variables, obtained from a subsequent LISREL analysis, are also noted at the end of each exhibit. Collectively, the information contained in these exhibits provide a point of reference for an initial assessment of the measurement properties of the constructs.

In the second set of exhibits, an arrow schema is used to summarize the major structural links advanced in each of the hypotheses.[132] In this regard, the arrow schemata provide a convenient, pictorial representation of the proposed relations between the latent constructs, as well as those between the observed and unobserved variables. Collectively, these linkages comprise the "specification" of

---

[130] It is important to note that the labelling of the theoretical concepts as endogenous or exogenous variables is always specific to the context of a given model. Hence, a latent variable which is termed exogoneous (independent) in one model may appear as an endogenous (dependent) variable in another. Since the hypothesis testing here closely follows the incremental model building approach of Chapter 4, in the forthcoming sections this contextual and differential labelling occurs frequently.

[131] The correlations, variances and covariances for all the manifest variables used in the study are reproduced in Appendix-B.

[132] It is important to note that most of the nonobservational research hypotheses from Chapter 4 contain a number of subhypotheses. The arrow schemata described here contain "all" of these subhypotheses.

a model which is evaluated by the LISREL program. In all the exhibits, the standardized parameter estimates obtained from the LISREL analyses are shown on the arrow schemata.

The parameter estimates which summarize the "measurement" properties of the constructs (i.e., λy's and λx's) are generally "invariant" in the evaluation of an overall hypothesis and in any of its parts. Hence, these parameters are presented, separate from the structural parameters, in the third set of exhibits. These exhibits also contain the Squared Multiple Correlations (SMCs) obtained for each of the manifest variables.

The fourth set of exhibits present the Maximum Likelihood (ML) parameter estimates for the [primary] "structural" relations and their level of [statistical] significance. Unless noted otherwise, the first column in this exhibit always contains the parameter estimates for an overall hypothesis, followed by the results for an individual subhypothesis and/or a special case of the overall hypothesis.[133] The measures of overall goodness of fit (e.g., Chi Square, GFI and RMR) are shown at the end of each exhibit.[134] The latter quantities collectively indicate

---

[133] An overall hypothesis is designated, for example, as H-1 and a subhypothesis as H-1.1. If a modified version of a hypothesis is reported, it is designated as H-1M or H-1.1M.

[134] These quantities are defined and described in the next section.

the degree of correspondence among the variance/covariance structure implied by the hypothesized relations and the one actually observed among the manifest variables.

In the next section, a nontechnical overview of the LISREL methodology is presented. This is followed by a discussion on the assessment of fit with LISREL models. In the final section the general criteria used in the evaluation of the measurement properties are summarized.

The LISREL Methodology

The system of structural equations in a LISREL model specify the hypotheses about the phenomenon under study in terms of tentative cause and effect variables and various causal effects.[135] Each equation in both the latent variable model and the measurement model represents an implied causal link rather than an empirical association. Hence, the structural parameters generally do not coincide with coefficients of regression among observed variables (Goldberger 1971,1973). In this regard, the structural parameters represent relatively unmixed, invariant, and autonomous features of the mechanisms that generate the observed variables (Joreskog and Sorbom 1982).

---

[135] The discussion of LISREL methodology described in this section, unless stated otherwise, are taken from Joreskog and Sorbom (1982) and the User's Guide to LISREL, Versions V and VI, (Joreskog and Sorbom 1983).

When all the observed and latent variables are expressed as deviations from their mean values, the most general LISREL model is defined as shown in Exhibit 27. In this model, the elements in the vectors [n] and [ξ] are the latent or unobservable variables. The rules of correspondence among the unobserved variables and the observed elements [i.e., y'=(y1,y2,.....yp) and x'=(x1,x2,.....xq)] are given in a second set of structural equations which are summarized in Exhibit 28.

When the observed variables are assumed or demonstrated to have a multivariate normal distribution, the information about these variables can be fully described by the mean vector and the covariance matrix.[136] The parameter estimation with LISREL, given the structural and measurement models above, is one of fitting the covariance matrix "implied" by the model, [Σ], to the one given by the sample covariance matrix, [S]. More specifically, as Bentler and Bonett (1980) note

> In covariance structure analysis a sample of multivariate data based on N subjects and [p+q] variables is summarized in the [(p+q)x(p+q)] sample covariance matrix, S, based on N-1 degrees of freedom. The elements [sij] of S are the variances of the variables and their covariances.
>
> It is hypothesized that the corresponding population covariance matrix, [Σ], with elements [σij] is generated by [t] true though unknown parameters that can be assembled in the [tx1]

---

[136] Hence, information about parameters provided by moments of higher order are ignored in LISREL analysis.

EXHIBIT 27

The Latent Variable Model In LISREL

$$\underset{\sim}{\eta} = \underset{\sim}{B}\underset{\sim}{\eta} + \underset{\sim}{\Gamma}\underset{\sim}{\xi} + \underset{\sim}{\zeta}$$

Where:

$\underset{\sim}{\eta}' = (\eta 1, \eta 2, \ldots \eta m)$, is a random vector of latent endogenous (dependent) variables,

$\underset{\sim}{\xi}' = (\xi 1, \xi 2, \ldots \xi n)$, is a random vector of latent exogenous (independent) variables,

$\underset{\sim}{B} = (m \times m)$ ....., is a matrix of coefficients, representing direct causal effects among the η's,

$\underset{\sim}{\Gamma} = (m \times n)$ ....., is a matrix of coefficients, representing direct causal effects between the ξ's and η's,

$\underset{\sim}{\zeta}' = (\zeta 1, \zeta 2, \ldots \zeta m)$, is a random vector of residuals or errors in equations.

With the assumptions:

$E(\eta) = 0$,
$E(\xi) = 0$,
$E(\zeta) = 0$,
ζ uncorrelated with ξ, and
(I-B) is nonsingular

EXHIBIT 28

The Measurement Model In LISREL

$$\underset{\sim}{y} = \underset{\sim}{\Lambda y}(\underset{\sim}{n}) + \underset{\sim}{\epsilon} \quad \text{and} \quad \underset{\sim}{x} = \underset{\sim}{\Lambda x}(\underset{\sim}{\xi}) + \underset{\sim}{\delta}$$

Where:

$\underset{\sim}{\epsilon}' = (\epsilon 1, \epsilon 2, \ldots\ldots \epsilon p)$, is a vector of errors in measurements y's,

$\underset{\sim}{\delta}' = (\delta 1, \delta 2, \ldots\ldots \delta q)$, is a vector of errors in measurements of x's,

$\underset{\sim}{\Lambda y} = (pxm)$ ....., matrix of regression coefficients of y's on n's, and

$\underset{\sim}{\Lambda x} = (qxn)$ ....., matrix of regression coefficients of x's on ξ's,

With the assumptions:

$E(n) = 0$, $E(\xi) = 0$, $E(\epsilon) = 0$, and $E(\delta) = 0$,
ϵ uncorrelated with n, ξ, and δ,
δ uncorrelated with n, ξ, and ϵ, and
y and x with multivariate normal distribution.

> vector [θ], so that each element of the covariance matrix is a function of the [t] elements of [θ] under a given model.
>
> Thus, [σij=fij*(θ)] may be said to be the model for the covariance structure, where the function [fij] describes the particular structure under investigation that relates [t] parameters in [θ] to [σij] (notation adapted to that of Joreskog and Sorbom 1983, p.589).

In LISREL methodology, the Maximum Likelihood (ML) parameter estimates in vector [θ] are obtained by means of an iterative procedure which minimizes the fitting function:

$$F = \log |\Sigma| + tr(S\Sigma^{-1}) - \log |S| - (p+q),$$

by successively improving a given set of initial estimates for all parameters.[137] The fitting function, F, is regarded as a function of the independent parameters in [θ], which in turn has as its elements, all the free and constrained parameters in [Λy, Λx, B, Γ, Φ, Ψ, θe, and θd]. Here, [Φ, Ψ, θe, and θd] are the covariance matrices of [ξ, ζ, ε, and δ] respectively. The outcome of, and the implications from, this estimation procedure is summarized by Bentler and Bonett (1980):

> Assuming a theory to be correct, if the sample size N were arbitrarily large, [S] would converge to [Σ], and it would be obvious whether the sample

---

[137] A description of the Initial Estimates (IE) and the Unweighted Least Squares (ULS) parameter estimates which can also be obtained with LSREL VI is given in Joreskog and Sorbom (1982, p.405-407). Since we will be reporting only the ML estimates in statistical analyses, other parameter estimates are not discussed here.

> data matrix S correspond to a particular hypothesized structure. In data analysis, however, where [Σ] and [θ] are not known and where N is not very large, it is first necessary to estimate the parameters of the model, yielding [θ-hat] and [Σ-hat], via [$\hat{\sigma}$ ij=fij*(θ-hat)].
>
> The closeness of the model-based estimated covariance matrix, [Σ-hat], to [S] not only serves as a criterion to be optimized in estimating the parameters, but it [also] represents an index of the validity of the model itself. If [Σ-hat] is virtually identical element by element under the model to [S], the model [fij*(θ)] that generates [Σ-hat] via [fij*(θ-hat)] is a possible candidate for the structure underlying the population [Σ].
>
> If even the best estimate of [Σ] under the model is very different from [S], it is unlikely that the hypothesized model accurately mirrors the process that generates the data, thus providing a basis for using sample data to reject a given hypothesized model (p.590).

Assessment Of Goodness-Of-Fit In LISREL Methodology

An important part in the application of the LISREL methodology is the assessment of the "overall" fit of the proposed relationships, and the detection of lack of fit of a model implied in research hypotheses. The most recent version of the LISREL program provides several "tools" for this purpose. These measures are uniformly reported as part of the arrow diagrams in the second set of exhibits. A brief description of these quantities, as well as some of the issues in their interpretation, are summarized below.

The Chi square with its associated degrees of freedom is probably the most frequently used test statistic

in the structural equations methodology. The statistic χ^2, which is a function of sample size N, and the closeness of [Σ-hat] to [S], provides a probabilistic basis for evaluating the overall goodness of fit of a model. In standard LISREL applications, the Chi square test statistic is defined as follows:

$$\text{Chi square} = (N-1) * F$$

With the degrees of freedom given by:

$$d.f = (1/2) * k * (k+1) - t$$

where:

[F] = is the minimum of the fitting function,

[k] = is the number of (p+q) observed variables, and

[t] = is the total number of independent (free) parameters estimated in a given model.

The chi square statistic provides a test of the proposed model, [σij=fij*(θ)], against the general alternative that the variables are simply correlated to an arbitrary extent. In other words, the alternative model "proposes" that [σij=f.s.ij(θs)], where [θs] contains all [p+q] elements of Σ. If chi square value is large compared with the degrees of freedom, one concludes that the proposed

model, [fij*(θ)], does not appropriately mirror the process that generates the data in the population. If the statistic is small compared with degrees of freedom, one concludes that the model provides a "plausible" representation of the system of influences among the variables in the population.[138] Hence, the associated probability level of Chi square can be interpreted as the probability of obtaining a Chi square value greater than the one actually obtained, given that the model is "correct."

Although the chi square test provides valuable information about a "statistically false" model, its dependency on the sample size mitigates the value of the information obtained. As Bentler and Bonett (1980) note

> The increase in ability to detect a false model with increasing sample size represents an important aspect of statistical power, but in the context of most applications [e.g., LISREL], in which the exactly correct model is almost certainly unknowable, this effect of sample size is a mixed blessing.
>
> Since the chi square is a direct function of sample size, the probability of rejecting any model increases as N increases, even when the residual matrix [S-Σ] contains trivial discrepancies...
>
> As a consequence, in very large samples virtually all models that one might consider would have to be rejected as statistically untenable... [On the other extreme], one's favorite model will stand

---

[138] In other words, the structure implied by the model relations summarized in [Σ] are compared to the implicit set of relations in the actual covariance matrix, [S]. For a more detailed discussion of the logic of Chi square test in LISREL, see Bentler and Bonett (1980).

> the best chance of being accepted when tested against the data of small samples (p.591).

Furthermore, as Joreskog and Sorbom (1982) point out, the Chi square is a valid test statistic only when:

> 1. The observed variables have a multivariate normal distribution,
> 2. The analysis is based on the sample covariance matrix, and
> 3. The sample size is fairly large (p.408).

All three assumptions, however, are seldom, if ever, fulfilled in practice.

With the growing applications of the LISREL methodology in marketing and other disciplines, a number of other problems associated with the Chi square statistic have also been discussed. Among these are, for example,

> 1. The reversal of the role of research hypothesis, and the consequent reduction in the "power" of the chi square test statistic (Bentler and Bonett 1980, Fornell 1983),
> 2. The inverse relationship between the overall goodness of fit and the strength of associations within and across observed variables or indicators (Fornell and Larcker, 1981a,b,1984, Fornell 1983), and
> 3. The trivial fit, indeterminacy, and improper solutions in many LISREL applications (Fornell 1983)

Collectively, these problems with the Chi square test statistic make an assessment of the overall fit, based

"only" on this measure, of limited value. Partly for these reasons, with the most recent version of the LISREL program, a number of other measures of overall fit have been implemented.

The two new measures of overall fit provided by LISREL 6.3 are the Goodness of Fit Index (GFI) and the Root Mean Square Residual (RMR). The Goodness of Fit Index for the ML solutions is defined as follows:

$$GFI = 1 - \frac{tr(\hat{\Sigma}^{-1} S - I)^2}{tr(\hat{\Sigma}^{-1} S)^2}$$

In this equation, $\hat{\Sigma}$ refers to the fitted or implied variance covariance matrix obtained from the hypothesized relations, and S defines the actual covariance matrix. When adjusted for the degrees of freedom, the GFI can be redefined as:

$$AGFI = 1 - [k*(k+1)/2*d.f]*(1-GFI).$$

Both the GFI and AGFI are independent of the sample size. These quantities can be interpreted as an overall measure of the (relative) amount of variances and covariances jointly accounted for by the model. Unfortunately, however, the statistical distribution and

other properties of either measure are generally unknown. Furthermore, there are no theoretical standards against which these measures can be compared. The experience of this researcher with the LISREL analyses suggests that a GFI at or exceeding .95, and a AGFI at or exceeding .90, are reasonably high values which generally indicate a good overall fit for a given model.

The second measure, RMR, is also free of the sample size problem associated with the Chi square. Furthermore, as Joreskog and Sorbom (1982) note, RMR "is relatively robust against departures from normality" (p.408). Root mean residual, defined as:

$$RMR = \left[2 \sum \sum (s_{ij} - \hat{\sigma}_{ij})^2 / k\,(k+1) \right]^{1/2}$$

is a measure of the average of residuals which can be interpreted only in relation to the elements in [S].[139] Root mean square residual is most meaningful in comparing the fit of two different models for the same data but it can also be used to assess the goodness of fit of alternative models

---

[139] Since RMR is a quantity which is always related to the magnitude of the actual correlations or covariances, there is no practical standard against which it can be compared.

with different data.[140]

As with most new statistical methodologies, it seems inevitable that the "rules" of acceptance or rejection of test conditions come to be established through the collective trials and errors of their users. In this regard, LISREL is no exception. Predictably, certain rules of thumb concerning the "proper" application and evaluation of LISREL methodology such as, the appropriate sample size, the reliability level(s) in indicators, and probability value associated with the Chi square statistic have been reported in the literature (e.g., Joreskog and Sorbom 1982,1983, Boomsa 1982, Bagozzi 1983,1984, Fornell 1983, Fornell and Larcker 1981a, Bentler and Bonett 1980, Bonett 1982).

Despite the problems associated with the Chi square measure, for example, a p value of $\geq$ [.10] has become the "magical" probability level in accepting the fit of a LISREL model as a satisfactory solution (see, for example, Bagozzi 1976,1977,1980a,1982b, Aaker and Bagozzi 1979, Aaker et al 1980, Phillips 1981, Joreskog and Sorbom 1982,1983). According to her analysis of the small sample properties of LISREL, Boomsa (1982) has suggested a sample size of at least 100 data points for making any substantive inferences

---

[140] For example, alternative specifications of a model with a different set of variables as indicators, holding the basic structural relations the same.

with LISREL. Bagozzi (1981), on the other hand, has argued that "the (LISREL) approach is justifiable when the sample size minus the number of parameters to be estimated is greater than 50" (p.380).

Most of the problems in the evaluation of LISREL models are clearly unresolved. As Bagozzi (1981) notes:

> Some of these [issues] are statistical (e.g., sensitivity of chi square test to sample size, lack of satisfactory R2 analog, fallible standard errors of parameter estimates, unknown robustness of test procedures), others are philosophical (e.g., the meaning of causality, correspondence rules, and unobservables), and still others are methodological (e.g., assessment of construct validity, the design and conduct of research) (p.380).

Despite these issues, however, the LISREL modeling provides a significant improvement over the more traditional correlational analyses where the relations between theoretical concepts are frequently ill defined and, by design, the measurement errors are never accounted for (Bagozzi and Phillips 1982). In the construction and evaluation of the LISREL models, and more specifically, in the assessment of the goodness of fit of these models, probably the most important point to remember is the need to consider the various test conditions discussed above in an integrated fashion, always keeping in mind the theoretical rationale for the hypotheses which generate them. It is for this reason, Joreskog and Sorbom (1983) have repeatedly cautioned that

> the measures chi square, GFI and RMR are measures of the overall fit of the model to the data and do not express the quality of the model judged by any other internal or external criteria. For example, it can happen that the overall fit of the model is very good but with one or more of the relationships in the model very poorly determined, as judged by squared multiple correlations, or vice versa. Furthermore, if any of the overall measures indicate that the model does not fit the data well, it does not tell what is wrong with the model or which part of the model is wrong (p.41).

Therefore, it is essential to remember that the results from the LISREL methodology, and especially the goodness of fit of the models, should be assessed considering not only the test statistics described above, but also the measurement properties of the individual constructs.

Assessment Of Measurement Properties In LISREL Methodology

One of the major advantages in using structural equations methodology lies with the stringent requirements imposed on the researcher to explicate the numerous assumptions ordinarily made in empirical analyses. Among the most important of these assumptions are those involving the measurement properties of the theoretical concepts employed in research.

In social science research, it is still a common practice to make the unrealistic assumption that measurement errors are negligible, and therefore, can be completely ignored in data analysis. This assumption is especially prevalent in retailing performance studies.

Implications of errorless measurement on parameter estimation with regression type statistical analyses are well known and are not repeated here (see, for example, Goldberger 1964, Blalock 1964,1965,1968,1969a, 1979, Bagozzi 1980b,1984, Bagozzi and Phillips 1982, Namboodiri et al 1975). In the latter work, Namboodiri et al propose a general strategy which provides an excellent explication of the nature and scope of the issues involved. A brief review of this research strategy is useful in describing several features and statistical measures available in LISREL.

In order to effectively deal with measurement errors, Namboodiri, Carter and Blalock (1975) have suggested a three step research strategy. According to the authors:

> First, one must attempt to define one's theoretical variables as clearly as possible so that some sort of highly specific measurement error model can be constructed. This is usually the most difficult but also the most crucial step in the whole process. Here, one must be especially careful not to let the existence of a reasonably simple metric dictate a definition of a variable that is not intended.
>
> Second step [involves] writing down an equation linking the "true" value to the measurement indicator... [given] a rigorous theoretical definition of the variable.
>
> A final third step... [involves] the deductive task of extracting the implications of the measurement-error models for testing, and for estimating, the relevant parameters (p.536-8).

The overall progression of this thesis is illustrative of an attempt at application of this prescriptive criteria. It

will be recalled, in Chapter 4 one of the aims of the discussion was to define and describe the theoretical variables of interest in this study. Similarly, in Chapter 5, the discussion centered around correspondence rules and empirical definitions for these constructs. Collectively, the contents of these chapters correspond to the first step suggested by Namboodiri et al. The second step of the research strategy proposed by the authors is described in a LISREL modeling framework in the present chapter. In this regard, Exhibit 28 defines and describes how empirical definitions are linked to the unobserved, theoretical notions used in this research. The third and final step prescribed by the authors is a subject matter yet to be addressed, and in part, forms the basis for the balance of the discussion in this section.

Before and during the application of a structural equations methodology to any substantive research question, it is well advised that the measurement properties of the key constructs used in research are carefully examined. As Bagozzi (1983) notes "although it is true that the analysis of covariance structures allows for the simultaneous assessment of measurement and theory, it is often meaningful and useful to examine measurement models independent of the entire theoretical structure in which they are embedded" (p.449). According to Bagozzi, at least four situations might arise where one might want to do this:

> [1] Within the context of a larger theoretical model, one might want to look at measurement models of constructs for diagnostic purposes. It would be premature to stop at the rejection of a larger theoretical model, based on goodness of fit measures, without asking why the model failed to perform as predicted... Investigation of submodels or measurement models can help one discover flaws not readily visible in larger systems.
>
> [2] For more exploratory studies, in pretests, or in the early stages of confirmatory studies, one can [also] examine measurement models as an aid in item selection, the assessment of reliability, and construct development.
>
> [3] It is sometimes useful to investigate measurement models in construct validation contexts. Examination of convergent, discriminant, and concurrent validity can be accomplished with the use of measurement models.
>
> [4] An examination of measurement models might be done occasionally for pragmatic reasons. Some models may be so large with many measurements and many constructs that a basis is needed to form subindices (p.449-450).

In this regard, the information summarized in the variance covariance structure and the correlation coefficients among the observed variables provide a useful starting point.[141] Although it is well known that no measure of covariation, in itself, implies "causation," the overall "patterns" of the correlations or covariances provide important insights into the measurement properties of the constructs[142] (e.g.,

---

[141] In the context of the discussion here, it is worthwhile to note that the correspondence rules adopted in this research imply a "causal relation" among the latent and empirical variables.

[142] The examination of the patterns of associations within and across the indicators of latent constructs has its

Fornell and Larcker 1981a,b, Bagozzi 1981, Bollen 1981,1983, Curtis and Jackson 1962).

In structural equations methodology, when there is a set of unobservable variables each measured with two or more indicators, and further, when:

1. the latent variables are assumed and/or demonstrated to be unidimensional,
2. the causal correspondence rules are assumed and/or justified, (i.e., the reflective or effect indicators are present),
3. it is assumed and/or demonstrated that there is no systematic error in measurements, (i.e., the first point holds), and finally
4. there is no excessive random error in measurements,

then certain, a priori patterns of associations (e.g., correlations) are expected among the indicators. In order to illustrate these patterns and to evaluate their implications for the measurement properties of the latent constructs, consider the two construct model (with three indicators for each construct) shown in Exhibit 29. Two

---

genesis and justification in the method of concomitant variation due to Mill (1959). According to this rule, two phenomena are said to be causally related, if they are found to covary in a regular way (Bagozzi 1979). Hence, the method of concomitant variation fundamentally rests on the notion that if two things are related by cause and effect, then, they must, by definition, be correlated.

broad "logical" criteria can be specified with respect to the hypothetical relations illustrated in this Exhibit.[143]

The first criterion, the rule of convergence in measurement, describes the condition where indicators of a given concept are highly correlated.[144] More specifically, for convergence in measurement to hold, the following expectations need to be confirmed:

> Measures of the same construct, [given that each of the conditions 1,2,3 and 4 above holds], should be highly intercorrelated among themselves, and be uniform in their overall pattern of intercorrelations (Bagozzi 1981, p.375).

In other words, convergence in measurement for construct-B requires that all the elements in the first "measurement" triangle [i.e., ry2y1, ry3y1, ry3y2] be large in magnitude, and of approximately the same value (see, Exhibit 29). Similarly, the elements in the second measurement triangle for construct-A, [i.e., rx2x1, rx3x1, rx3x2], should also be high and of about the same value. Hence, according to Fornell and Larcker (1981a):

> As these correlations become larger (smaller), the convergent validity or reliability of the associated constructs [e.g., A and B in the example] becomes higher (lower) (p.41).

---

[143] Unless otherwise stated, the discussion and narrative here is adopted from Bagozzi (1981) and Fornell and Larcker (1981a). Convergence in measurement and differentiation in constructs are terms originally used by Bagozzi.

[144] Assuming reflective or effect indicator mode in correspondence rules.

EXHIBIT 29

A Hypothetical Model For The Assessment Of Measurement Properties

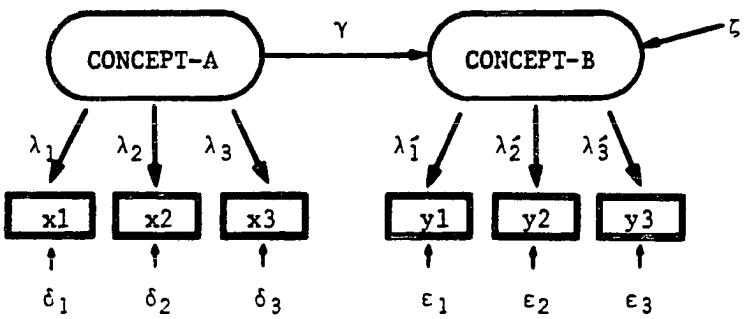

	y_1	y_2	y_3	x_1	x_2	x_3
y_1	1.000					
y_2	$r_{y_2y_1}$	1.000				
y_3	$r_{y_3y_1}$	$r_{y_3y_2}$	1.000			
x_1	$r_{x_1y_1}$	$r_{x_1y_2}$	$r_{x_1y_3}$	1.000		
x_2	$r_{x_2y_1}$	$r_{x_2y_2}$	$r_{x_2y_3}$	$r_{x_2x_1}$	1.000	
x_3	$r_{x_3y_1}$	$r_{x_3y_2}$	$r_{x_3y_3}$	$r_{x_3x_1}$	$r_{x_3x_2}$	1.000

Although the criteria for convergence in measurement is similar to Campbell and Fiske's (1959) notion of convergent validity, it differs from it in one important respect (Bagozzi 1981). Convergent validity represents the degree to which two or more attempts to measure the same concept, through maximally different methods or test conditions, agree. Hence, as it was originally conceived, convergent validity is designed as a test condition where a single measure of a construct (i.e., a trait) is obtained through different methods. The test of convergence in measurement, however, primarily applies to cases where the same method is used more than once to obtain multiple indicators of a given construct.[145] Therefore, when convergence in measurement is generalized to instances where multiple methods are used to obtain multiple indicators with each method, then convergent validity becomes a special case of the rule of convergence in measurement. As Bagozzi (1981) notes

> It is more difficult to establish convergence by using multiple procedures than by using multiple applications of the same procedure, because method variation in the former tends to produce correlations differing in value (p.376).

Hence, in the context of structural equations methodology with multiple indicators, convergent validity can best be viewed as a special case of convergence in measurement,

[145] Note that this is not a test-retest measurement but alternative measurements of a given concept.

where with the former one can distinguish trait from methods variation, while with the latter this is not possible.

The second "logical" criteria that can be specified with respect to the model of Exhibit 29 is termed the rule of differentiation in constructs. According to this criterion, the following patterns of associations (e.g., correlations) are expected:[146]

> The cross-construct correlations among [empirical] measures of causally related [latent] variables should be highly intercorrelated but should correlate at a lower level than that of the within-construct correlations. Further, the pattern of correlations thus obtained should be uniform [in magnitude] (Bagozzi 1981, p.376).

According to this rule, therefore, the model relations depicted in Exhibit 29 require the following desiderata:

1. All the elements in the theory rectangle [i.e., rxiyj correlations] should be high and statistically significant,
2. The elements [rxiyj] should be smaller in magnitude than elements in the measurement triangles [i.e., ryiyj and rxixj], and
3. The values of [rxiyj] should be uniform in magnitude (where i=1,2,3; j=1,2,3, and $i \neq j$).

---

[146] A third criteria which is termed criterion related or concurrent validity can be obtained by a rewording of the rule of differentiation. According to Bagozzi (1981) this rule would read as follows:

> The cross-construct correlations among measures of constructs hypothesized to be related empirically should be correlated but at a lower level than the within-construct correlations. In addition, the pattern of cross-correlations should be uniform (p.376).

If one or more of these requirements are violated then the implication is either (a) one or more of the initial conditions [i.e., unidimensionality, correspondence rules, systematic and/or excessive random error in measurements] are at some variance with the data at hand; or (b) no causal relation exits between the concepts in question.

The rule of differentiation in constructs is also similar to Campbell and Fiske's (1959) idea of discriminant validity. However, it differs from it in the sense that different measurement procedures are not required, and it is more general than discriminant validity in the sense that it entails the latter within the context of structural equation models. Contrary to the rule of convergence, however, it is easier to achieve discrimination with multiple procedures than with multiple applications of the same procedure. This is, in part, a consequence of the methods variation inherent in multiple procedures (Bagozzi 1981, p.377).

In summary, if one were comparing measure validation obtained through multiple procedure tests, with those obtained through multiple applications of a single procedure tests of validity:

1. The test of convergent validity would be a more stringent criterion for demonstrating convergence than the rule of convergence in measurements, but
2. The rule of differentiation in constructs would be a more stringent criterion for showing discrimation than the test of discriminant validity.

These logical criteria are uniformly used in the forthcoming sections in assessing the measurement properties of the constructs. However, it is important to note that the rules of convergence and differentiation have implications not only for the measurement properties of the constructs, but also for the overall goodness of fit of a model. As Fornell and Larcker (1981a) note

> The criterion for a perfect fit [in LISREL methodology] is structural consistency, which implies that all elements of [the theory rectangle] are identical.[147] If structural consistency is violated, goodness of fit will suffer. For example, if the correlations in [the theory rectangle] differ widely, a two construct model... will not adequately summmarize the relationships between the original variables. This is because large divergence between [these elements] suggests that there is more than one construct relationship between x and y variables. Thus, if the data are forced into an inappropriate two construct structure, a poor fit will result (p.42).

Hence, in LISREL methodology, the assesment of goodness of fit of the model and the assesment of the measurement properties of the construct are closely intertwined. As Joreskog and Sorbom (1982) suggest, in assessing the results from LISREL analyses, it is important to pay careful attention to all of the following quantities:

1. Parameter estimates.
2. Standard errors (with ML only).

---

[147] Structural consistency, in this regard, is the limiting case of the rule of differentiation in constructs.

3. Squared multiple correlations.
4. Coefficients of determination.
5. Correlations of parameter estimates (with ML only) (p.407).

An unreasonable value for any of these quantities typically indicates that the model is fundamentally wrong and/or is misspecified to a degree that the actual covariance structure cannot account for the hypothesized relationships.

Two of these quantities, the squared multiple correlations (SMC), and the coefficients of determination (COD), under certain conditions, can also be used as measures of reliability. The SMC for the ith observed variable, defined as:

$$[\ 1 - \hat{\theta}ii/sii\ ],$$

where:

$[\hat{\theta}ii]$: is the error variance, and

[sii] : is the variance of the ith observed variable,

is the theoretical formulation of the reliability for a single measure (Peter 1979, Fornell and Larcker 1981a). Hence, when the constructs are assumed to be unidimensional the SMC gives an indication of the amount of error present in each of the observed variables[148] (Fornell and Oded

[148] It is useful to note that in a standardized LISREL

Gur-Arie 1983).

Similarly, the coefficient of determination (COD), defined as:

$$[\ 1 - |\underset{\sim}{\Theta}|/|\underset{\sim}{S}|\ ],$$

where:

$[|\underset{\sim}{\Theta}|]$: is the determinant of the error variance-covariance matrix, and

$[|\underset{\sim}{S}|]$: is the determinant of the covariance matrix of the observed variables,

can also be used as an "overall" measure of reliability, considering all of the manifest variables collectively. To reiterate, these quantities (i.e., SMC and COD) are "measures [which] show how well the observed variables serve, separately [SMC] and jointly [COD], as measurement instruments for the latent variables" (Joreskog and Sorbom, p.407).

A minimum criterion for reliability in most applications of LISREL methodology is that trait variance exceed error variance. According to this criterion, each of the observed variables must have at least 50 percent variance shared with the associated construct. Hence, an

---

solution, square root of the regression coefficients in Λy and Λx are equal to SMC's for the corresponding observed variables.

SMC equal to or greater than 50 percent is generally considered to be of sufficient magnitude in most LISREL applications to warrant further analyses (Fornell and Larcker 1981a, Bagozzi 1983, Fornell and Oded Gur-Arie 1983). This rule also applies for all the variables considered collectively, (i.e., the COD measure).

Finally, two other quantities provided in LISREL VI.3 can be used as pseudo-R2 measures. The first measure, the squared multiple correlations for structural equations (SMC-SE) is defined as:

$$[\ 1 - \mathrm{Var}\ (\zeta i)/\mathrm{Var}\ (ni)\ ],$$

where the subscript refers to the structural equation, [i], which links a set of latent constructs. The second measure, total coefficient of determination (TCD), for all structural equations, is similarly defined as:

$$[\ 1 - |\underset{\sim}{\Psi}|/|\mathrm{Cov}\ (\underset{\sim}{n}\ )|\ ],$$

where:

$[\,|\underset{\sim}{\Psi}|\,]$: is the determinant of the covariance matrix .

These two measures provide an assessment of the variance accounted for by each structural equation (SMC-SE) and the set of all equations collectively (TCD). However, since there is no statistical test associated with either of the

measures, they can be used only as a "qualitative" tool. These measures, along with other quantities provided by LISREL may be especially useful in comparing alternative specifications of the same set of variables.

Exhibit 30 summarizes all of the statistical measures and other qualitative criteria reviewed in this section. In the next sections, these measures are uniformly presented for each hypothesis in sets of four exhibits. Since no specific reference will be made to substantive interpretations of these measures, the reader should refer to this section for clarification and/or justification for the conclusions drawn from the statistical analyses.

The empirical definitions of all the manifest variables which were presented in Chapter 5 are repeated in Exhibit 31 in order to facilitate references to the measurements of theoretical constructs in the next sections.

EXHIBIT 30

Summary Of Statistical Measures In Assessing Results From Statistical Analyses

CRITERIA FOR ASSESSING	Summarized in:
A. Measurement Properties:	
Rule of Convergence	First Exhibits
Rule of Differentiation	First Exhibits
Coefficients of Determination	First Exhibits
Standardized Regresssion Coeff.	Second Exhibits
Maximum Likelihood Estimates	Third Exhibits
Squared Multiple Correlations	Third Exhibits
B. Overall Goodness of Fit	
Chi Square	Fourth Exhibits
Goodness of Fit Index	Fourth Exhibits
Adjusted Goodness of Fit Index	Fourth Exhibits
Root Mean Square Residual	Fourth Exhibits
C. Hypothesized Stuctural Relations	
Maximum Likelihood Estimates	Fourth Exhibits
Standardized Parameter Estimates	Second Exhibits
Standard Errors	Fourth Exhibits
T-values	Third Exhibits
Squared Multiple Correlations for Structural Equations	Fourth Exhibits
Total Coefficient of Determination for all Structural Equations	Fourth Exhibits

EXHIBIT 31

Operationalizations Of The Latent Variables

Latent Constructs	Mnemonic	Empirical Definitions
1. Productivity	NSTSA	Sales per square foot of selling space
	NSTIN	Sales per dollar of average inventory
	NSTFE	Sales per full-time equivalent employee
2. Profitability	NPBT	Net profit before tax as a percent of sales
	ROCA	Contribution margin return on controllable assets
3. Managerial Effectiveness	MGREFF	7-Likert scale items from SOME-A
	MGRSKL	7-Likert scale items from SOME-A
	MGRACH	5-Likert scale items from SOME-A
	MGRSAT	8-Semantic Scale from SOME-A
4. Managerial Expertness	MGRYRS	Tenure (yrs) of manager
	MGRRTL	Manager's (yrs) retail experience
5. Marketing Effectiveness	LOCAT	2-Semantic scale items from CA-5
	SERVC	5-Semantic scale items from CA-5
	OFFER	7-Semantic scale items from CA-5
	ATMOS	5-Semantic scale items from CA-5

SOME: Survey of Managerial Effectiveness
CA : Competitive Audit Data Form

EXHIBIT 31

Operationalizations Of The Latent Variables (Cont.)

Latent Constructs	Mnemonic	Empirical Definitions
6. Competitive Intensity	DDSTRS	Number of discount department stores
	INTCPT1	Proportion of intercept competitors (number)
	INTCPT2	Proportion of intercept competitors (size)
7. Relative Overstoring	SPCPHH	Total retail space per household
8. Relative Size of Unit	CSTCS	Most relevant competitor's total space to unit's total selling area
9. Target Market Reach	MINORS	Percent of minorities
	CHLD14	Percent of children age 14 or younger
	INC14M	Percent of households with income $14m or less
10. (Character Of) Market Demand	AVGINC	Average household income
	AVGHSV	Average housing value
	AVGRTV	Average rent value
11. (Potential Of) Market Demand	TINCHH	Total personal income
	TRNTVA	Total value of rents
	THSNVA	Total value of housing
12. Market Growth	TINCGH	Annual rate of income growth-1
	TINCGP	Annual rate of income growth-2
	POPG	Annual rate of population growth

Results from Statistical Tests Of Nonobservational Research Hypotheses

It is well known that in many LISREL applications, it is almost always possible to find a subset of measurements or relationships that yield a satisfactory fit to data (Bagozzi 1983). For example, as Fornell (1983) notes

> One way to [get a "better" LISREL model] is to make the matter of fit trivial by increasing the rank of the solution, that is, by reducing the variables-to-factor ratio (p.446).

This can easily be accomplished, for example, by deleting certain indicators from the measurement model[149] or by allowing some of the measurement residuals to be correlated.[150] In order to avoid some of the pitfalls in post hoc model modification, in this study several general rules are followed.

First, given the sample size sensitivity of several quantities in LISREL (e.g., Chi square, critical ratios), the statistical results reported in the following sections

---

[149] The limiting case with this approach is the standard econometric applications of two or more stage simultaneous equations. If such models are properly specified, they are almost always just identified with zero degrees of freedom (i.e., the covariance structure is perfectly reproduced by model relations).

[150] Note that this is equivalent to introducing an additional "factor" or "systemic influence" to account for the variation in the observed variable(s).

are uniformly based on a sample of 211 stores. Hence, all cases with one or more missing values were eliminated from statistical analyses.

Second, with few exceptions, the findings reported from LISREL analyses are based on "all" the available indicators of a given concept. This is done in order to minimize the selection biases, i.e., choosing only a subset of indicators or relations which may provide the best overall fit. As Bagozzi (1983) suggests, "the best practice within a single study is to always present findings based on all measurements," (p.450).

Third, in most cases correlated measurement residuals are avoided in the LISREL analyses. Although correlated measurement errors are "justifiable" under certain conditions,[151] they "are fall-back options nearly always detracting from the theoretical elegance and empirical interpretability of a study" (Bagozzi 1983, p.450).

Finally, although all LISREL runs were performed using both the correlation and the covariance matrices, only the results from the analysis of correlation matrices are

---

[151] Bagozzi (1983) notes "correlated residuals should not be used in a model unless (1) It is warranted on theoretical or methodological grounds, or (2) It does not significantly alter the structural parameter estimates, [and] (3) It does not significantly alter the measurement parameter estimates" (p.450).

reported.[152] This is partly due to the arbitrary units of measurement in the observed variables, and partly because of easier interpretability of the results from LISREL analyses. In general, the choice of the analyses matrix does not alter the conclusions reported in this study.

The Relations Between Elements Of Market Demand And Supply

The Results For Hypothesis-1.

In Hypothesis-1, the degree of overstoring is posited to be a positive function of character (H-1.1), potential (H-1.2), and growth in market demand (H-1.3). Here, the three demand elements are the exogenous latent variables operationalized in nine indicators (x1-x9). Overstoring is the endogenous latent variable measured by one indicator (y1). The product-moment correlations among the manifest variables are given in Exhibit 32. The hypothesized relationships are summarized in a path analytic schemata in Exhibit 33.

In examining the correlations among the indicators, it appears that all three exogenous concepts have a high degree of convergence in measurement. In Exhibit 32, all

[152] However, it should be noted that analysis of correlation matrices in LISREL methodology have an effect on the final solution. Specifically, the estimates of standard errors obtained on the basis of correlation matrix rather than the covariance matrix are generally downward biased, inflating the critical ratios (Boomsa 1982, Fornell 1983).

EXHIBIT 32

Correlation Matrix For Hypothesis-1

		SPCPHH	AVGINC	AVGHSV	AVGRTV
SPCPHH	(y1)	1.000			
AVGINC	(x1)	0.275*	1.000		
AVGHSV	(x2)	0.231**	0.777*	1.000	
AVGRTV	(x3)	0.240*	0.868*	0.777*	1.000
TINCHH	(x4)	-0.382*	0.164*	0.313*	0.310*
THSNVA	(x5)	-0.320*	0.288*	0.540*	0.425*
TRNTVA	(x6)	-0.318*	0.155**	0.369*	0.272*
TINCGP	(x7)	0.346*	0.529*	0.277*	0.519*
TINCGH	(x8)	0.370*	0.632*	0.381*	0.560*
POPG	(x9)	0.387*	0.707*	0.506*	0.654*

	TINCHH	THSNVA	TRNTVA
TINCHH	1.000		
THSNVA	0.909*	1.000	
TRNTVA	0.881*	0.886*	1.000
TINCGP	-0.066ns	-0.084ns	-0.166**
TINCGH	-0.164**	-0.135**	-0.234*
POPG	-0.148**	-0.049ns	-0.215*

	TINCGP	TINCGH	POPG
TINCGP	1.000		
TINCGH	0.940*	1.000	
POPG	0.869*	0.938*	1.000

* p < .01
** p < .05
*** p < .10
ns Not Significant

TCOD (y Variables) : --
TCOD (x Variables) : 1.000

three "measurement triangles" contain high and uniform correlations. However, the differentiation in constructs between character, potential and growth of demand are fairly low. This is especially evident in the theory rectangle for character and growth in demand. Here, some of the correlations "across" indicators are as high as those found in the respective measurement triangles. In summary, although there is a high degree of reliability in measuring the exogenous constructs, the discrimination or differentiation among the same is questionable.[153]

Exhibit 33 provides a causal schemata summarizing the proposed relationships in H-1. Maximum likelihood parameter estimates for the structural links are given in Exhibits 34 and 35. The standardized parameter estimates are shown on the path schemata.

Of the three subhypotheses, demand character (H-1.1) and growth (H-1.3) are found to have a positive influence on overstoring. Both of these parameter estimates are in the direction predicted and are statistically significant. For a third subhypothesis, the influence of demand potential on overstoring (H-1.2), the parameter estimate is also significant. However, here the direction of influence is opposite to the one predicted in the research hypothesis (see Exhibit 35).

---

[153] Note also the SMCs in the last column of Exhibit 34 as well as the standardized estimates on Exhibit 33.

EXHIBIT 33

Model Specification And Standardized Estimates For Hypothesis-1

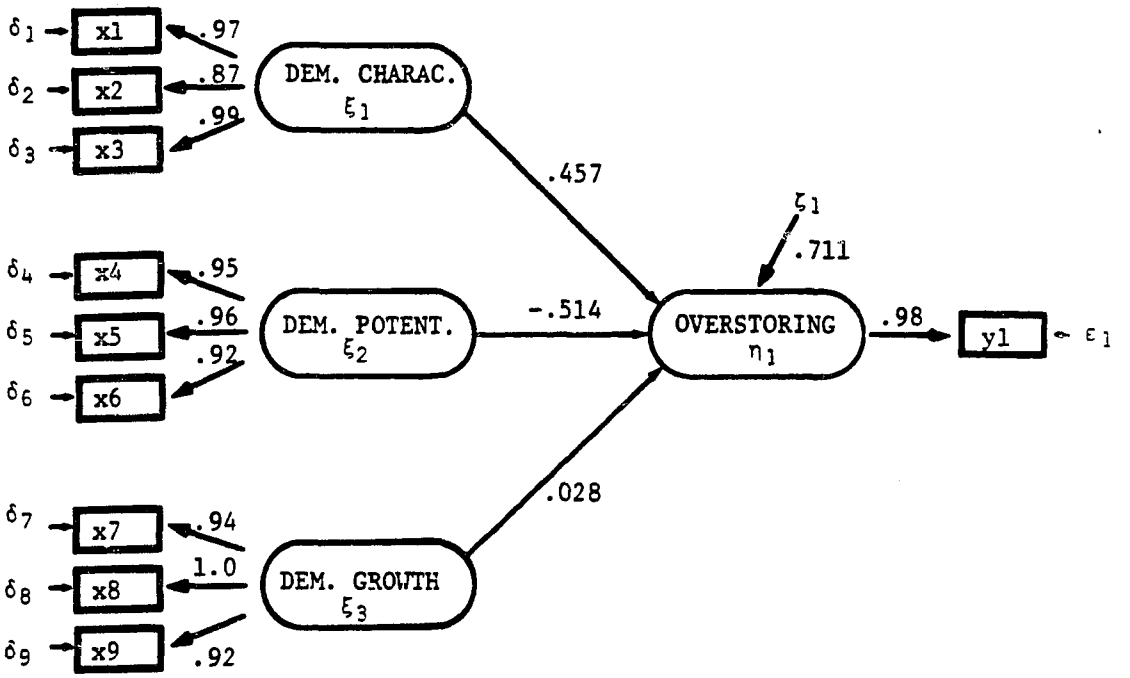

Not Shown Above : $\phi_{12} = .658$ and $\phi_{13} = .429$

EXHIBIT 34

ML Measurement Paramater Estimates For Hypothesis-1

Parameter	Estimate (ML)	Standard Error	T-Value	SMC
ly1	1.000*	.000	0.0	1.000
lx1	.984	.040	24.85	.854
lx2	.887	.047	19.02	.694
lx3	1.000*	.000	0.0	.882
lx4	.983	.028	34.96	.897
lx5	1.000*	.000	0.0	.931
lx6	.960	.031	30.51	.854
lx7	.947	.024	39.17	.889
lx8	1.000*	.000	0.0	.990
lx9	.921	.020	45.03	.888
te1	0.000*	.000	0.0	
td1	.146	.023	6.21	
td2	.306	.035	8.84	
td3	.118	.022	5.30	
td4	.103	.014	7.26	
td5	.069	.014	5.00	
td6	.146	.017	8.46	
td7	.111	.012	9.56	
td8	.010*	.000	0.0	
td9	.112	.012	9.59	

* Fixed Parameter

EXHIBIT 35

ML Structural Parameter Estimates For Hypothesis-1

Parameter*	H-1 Estimate (S.E.)	H-1.1 Estimate (S.E)	H-1.2 Estimate (S.E)	H-1.3 Estimate (S.E)
GA11	.456 (.104)	.297 (.074)		
GA12	-.525 (.077)		-.379 (.069)	
GA13	.027 (.090)			.376 (.065)
Phi13	.407 (.060)			
Phi12	.645 (.079)			
Psi	.688 (.069)	.923 (.091)	.869 (.085)	.860 (.084)
Goodness-Of-Fit Measures				
.sp 2				
CHI-SQUARE:	336.56	1.02	5.98	9.72
d.f. :	31	2	2	3
p-Value :	.000	.600	.050	.021
GFI :	.779	.998	.986	.978
AGFI :	.608	.988	.930	.926
RMR :	.105	.008	.015	.013
SMC-SE :	.289	.077	.131	.140
TCODSE :	.289	.077	.131	.140

(*) Note that a null entry in any row indicate that the corresponding parameter is a fixed (zero) element in the specification of that model.

Note that in the overall test of Hypothesis-1 (i.e., when all the links are considered simultaneously), the relationship between demand growth and overstoring is no longer significant. Furthermore, compared to the parameter estimates from the subhypotheses, the magnitude of structural parameters are different for H-1. This situation is similar to the case in OLS regression analysis with correlated predictor variables. However, as opposed to deleting the correlated (predictor) variables from the regression equation, in LISREL analyses these associations are incorporated into the specification of the model (i.e., phi12 and phi13).

Of the three subhypotheses, only H-1.1 indicates a good overall fit (see lower half of Exhibit 35). For both H-1.2 and H-1.3, Chi square test statistic is not significant. However, the average of the residuals (RMR) in both cases are fairly low, indicating a moderate fit to data.

For the overall hypothesis (H-1), the Chi square value is very large compared to degrees of freedom. Furthermore, both GFI and RMR indicate a poor overall fit to data (see Exhibit 35).

The Results For Hypothesis-2.

In Hypothesis-2, competitive intensity is posited to be an inverse function of demand potential (H-2.1) and a positive function of relative overstoring (H-2.2). In the specification of the overall hypothesis (H-2), competitive intensity and overstoring are the latent endogenous variables, measured by four indicators (y1-y4). Demand potential is the latent exogenous variable with three indicators (x1-x3). The correlations among the observed variables are given in Exhibit 36.

All of the correlations among the indicators of competitive intensity are high, uniform and statistically significant, indicating high convergence in measurement. The elements in the theory rectangles (i.e., correlations across indicators) are also significantly lower than the within construct correlations,[154] indicating high differentiation among the constructs. However, some of the correlations across indicators, especially those between the demand potential and competitive intensity, exhibit wide variations in magnitude. Furthermore, two of these correlations are not statistically significant.[155]

[154] "Within construct correlations" and elements in the "measurement triangle" are the same quantities. Similarly, "correlation across indicators" and the "theory rectangle" also refer to the same quantities in the correlation matrices.

[155] Note that the two nonsignificant correlations have DDSTRS variable in common. This pattern, coupled with

Exhibit 37 summarizes the hypothesized relations in a path analytic schemata. Note that, here the specification of the link between demand potential and overstoring is from H-1. Exhibits 38 and 39 present the ML parameter estimates for the measurement and latent variable models.

The structural parameter estimate for subhypothesis H-2.1 (i.e., the link between demand potential and competitive intensity) indicates that the direction of influence is opposite to the one predicted in H-2. For the second subhypothesis [H-2.2] (i.e., the relationship between overstoring and competitive intensity), the structural parameter estimate is in the direction predicted. Furthermore, both of these parameters are statistically significant. When the subhypotheses are considered simultaneously (H-2), similar conclusions hold with respect to both the direction of influence and the statistical significance of the structural parameter estimates[156] (see Exhibit 39).

Of the three alternative model specifications, only H-2.2 fits the data well. Both the overall hypothesis (H-2) and the first subhypothesis (H-2.1) have relatively high

---

the SMC for DDSTRS (see Exhibit 38), suggest that competitive intensity may not be a unidimensional construct.

[156] Since the relationship between demand potential and overstoring were treated in H-1.2, the ML parameter estimates are not reported in Exhibit 39.

EXHIBIT 36

Correlation Matrix For Hypothesis-2

		SPCPHH	DDSTRS	INTCPT1	INTCPT2
SPCPHH	(y1)	1.000			
DDSTRS	(y2)	0.305*	1.000		
INTCPT1	(y3)	0.249*	0.780*	1.000	
INTCPT2	(y4)	0.318*	0.825*	0.868*	1.000
TINCHH	(x1)	-0.382*	0.275*	0.377*	0.315*
THSNVA	(x2)	-0.320*	0.194ns	0.325*	0.257*
TRNTVA	(x3)	-0.318*	0.191ns	0.255*	0.197*

	TINCHH	THSNVA	TRNTVA
TINCHH	1.000		
THSNVA	0.909*	1.000	
TRNTVA	0.881*	0.886*	1.000

* p < .01
** p < .05
*** p < .10
ns Not Significant

TCOD (y Variables) : --
TCOD (x Variables) : .964

EXHIBIT 37

Model Specification And Standardized Estimates For Hypothesis-2

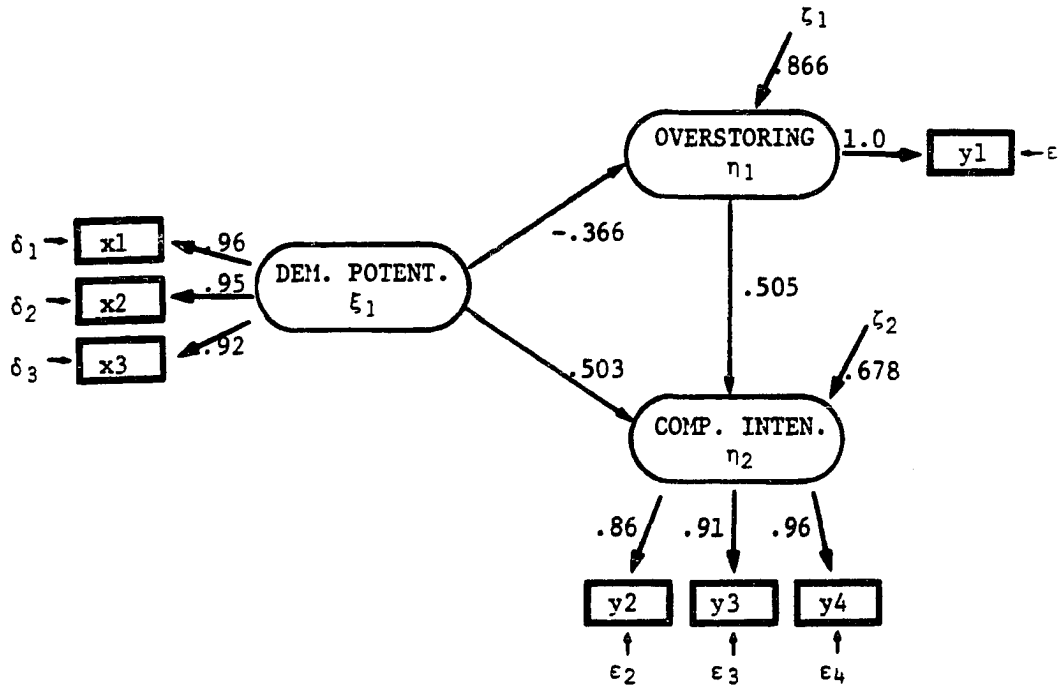

EXHIBIT 38

ML Measurement Paramater Estimates For Hypothesis 2

Parameter	Estimate (ML)	Standard Error	T-Value	SMC
ly1	1.000*	.000	0.0	1.000
ly2	.902	.045	20.0	.743
ly3	.952	.041	23.0	.826
ly4	1.000*	.000	0.0	.912
lx1	1.000*	.000	0.0	.923
lx2	.988	.032	30.6	.901
lx3	.959	.036	27.0	.849
te1	0.000*	.000	0.0	
te2	.257	.031	8.4	
te3	.174	.026	6.8	
te4	.088	.022	3.9	
td1	.077	.015	5.2	
td2	.099	.016	6.3	
td3	.151	.019	8.0	

* Fixed parameter

EXHIBIT 39

ML Structural Parameter Estimates For Hypothesis-2

Parameter	H-2 Estimate (S.E.)	H-2.1 Estimate (S.E)	H-2.2 Estimate (S.E)
be21	.482 (.062)	.313 (.069)	
ga11	-.381 (.069)		
ga21	.500 (.066)		.309 (.065)
psi1	.866 (.085)		
psi2	.618 (.070)	.821 (.091)	.827 (.098)

Goodness-Of-Fit Measures

.sp 2			
CHI-SQUARE	51.70	30.14	3.29
d.f.	12	8	2
p-Value	.000	.000	.193
GFI	.936	.956	.992
AGFI	.850	.884	.962
RMR	.035	.038	.016
SMC-SE1	.134	.098	.104
SMC-SE2	.322		
TCODSE	.346	.098	.104

residuals and the Chi square value is large compared to degrees of freedom, indicating a poor overall fit to data.

The Relations Between Elements Of Market Demand, Supply And Store Performance

The Results For Hypothesis-3.

In Hypothesis-3, the character (H-3.1), potential (H-3.2), and growth in market demand (H-3.3) are posited to have a direct and positive influence on retail store performance. Here, the three demand variables are the latent exogenous variables, and their operationalizations are the same as in H-1 (x1-x9). Performance construct, measured by four indicators (y1-y4), is the latent endogenous variable. The product-moment correlations among the manifest variables are given in Exhibit 40.

As it was noted in H-1, the indicators of demand constructs are highly reliable measures, but provide low differentiation among these concepts. All three demand elements, however, are well differentiated from the performance construct. The SMCs for the performance measures indicate that the reliability of the individual indicators are relatively lower than they are for the indicators of demand elements. However, within construct correlations in the measurement triangle are generally high and are of even magnitude. Furthermore, the TCOD for the

y-variables suggests that, collectively, these indicators are good overall measures of performance.

The specification of the model for the overall hypothesis (H-3) is summarized in a path analytic schemata in Exhibit 41. The ML parameter estimates for the measurement and latent variable models are given in Exhibits 42 and 43. The standardized parameter estimates are shown on the arrow schemata.

Contrary to the predictions of H-3, the direction of influence for the structural parameter estimates are negative in all three subhypotheses. However, of the three subhypotheses, only the link from demand character to performance (H-3.1) is statistically significant.[157] When the subhypotheses are considered simultaneously (H-3), the signs of parameter estimates for H-3.2 and H-3.3 are reversed, and the fit of the overall model significantly deteriorates.

This situation generally implies a model misspecification. However, in this case other evidence suggests that there may be no significant relationship between demand potential and growth, and store performance. For example, in Exhibit 40, note that the correlations across indicators of performance and the two demand

[157] Note that the link between demand growth and performance also approaches significance, with the parameter estimate almost twice as large as the associated standard error.

EXHIBIT 40

Correlation Matrix For Hypothesis-3

		NPBT	NSTSA	NSTFE	NSTIN
NPBT	(y1)	1.000			
NSTSA	(y2)	0.697*	1.000		
NSTFE	(y3)	0.611*	0.670*	1.000	
NSTIN	(y4)	0.662*	0.759*	0.673*	1.000
AVGINC	(x1)	-0.279*	-0.164*	-0.110***	-0.262*
AVGHSV	(x2)	-0.261*	-0.168*	-0.164**	-0.251*
AVGRTV	(x3)	-0.333*	-0.184*	-0.141**	-0.248*
TINCHH	(x4)	-0.067ns	-0.049ns	-0.106ns	0.034ns
THSNVA	(x5)	-0.074ns	-0.052ns	-0.109ns	0.015ns
TRNTVA	(x6)	-0.076ns	-0.060ns	-0.135**	-0.010ns
TINCGP	(x7)	-0.188**	-0.040ns	-0.052ns	-0.046ns
TINCGH	(x8)	-0.225*	-0.111**	-0.022ns	-0.139**
POPG	(x9)	-0.217*	-0.123**	-0.027ns	-0.178*

	AVGINC	AVGHSV	AVGRTV
AVGINC	1.000		
AVGHSV	0.777*	1.000	
AVGRTV	0.868*	0.777*	1.000
TINCHH	0.164*	0.313*	0.310*
THSNVA	0.288*	0.540*	0.425*
TRNTVA	0.155**	0.369*	0.272*
TINCGP	0.529*	0.277*	0.519*
TINCGH	0.632*	0.381*	0.560*
POPG	0.707*	0.506*	0.654*

	TINCHH	THSNVA	TRNTVA
TINCHH	1.000		
THSNVA	0.909*	1.000	
TRNTVA	0.881*	0.886*	1.000
TINCGP	-0.066ns	-0.084ns	-0.166**
TINCGH	-0.164**	-0.135**	-0.234*
POPG	-0.148**	-0.049ns	-0.215*

* p < .01
** p < .05
*** p < .10
ns Not Significant

TCOD (y Variables) : .903
TCOD (x Variables) : 1.000

EXHIBIT 41

Model Specification And Standardized Estimates For Hypothesis-3

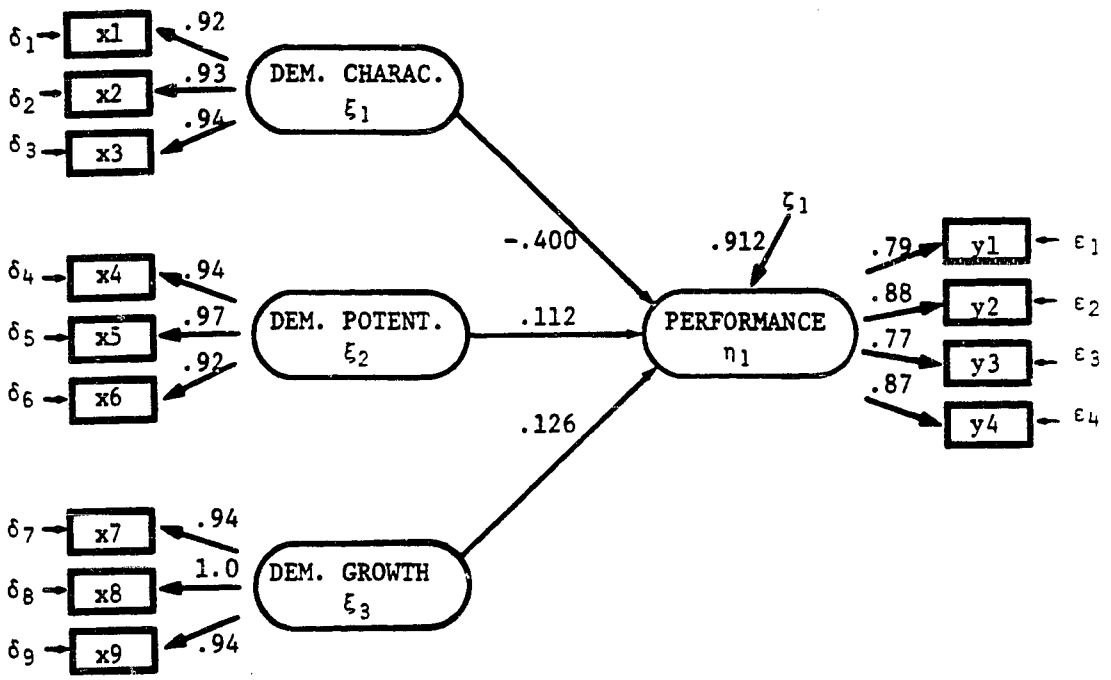

Not Shown Above : ϕ_{12}, ϕ_{13} and ϕ_{23} [.371, .618 and -.165] respectively.

EXHIBIT 42

ML Measurement Paramater Estimates For Hypothesis-3

Parameter	Estimate (ML)	Standard Error	T-Value	SMC
ly1	.901	.066	13.7	.620
ly2	1.000*	.000	0.0	.765
ly3	.880	.066	13.2	.593
ly4	.989	.063	15.7	.748
lx1	.982	.042	23.6	.854
lx2	.883	.049	18.0	.689
lx3	1.000*	.000	0.0	.885
lx4	.972	.032	30.2	.884
lx5	1.000*	.000	0.0	.936
lx6	.954	.034	27.7	.851
lx7	.946	.024	38.9	.887
lx8	1.000*	.000	0.0	.990
lx9	.947	.025	39.2	.889
te1	.380	.045	8.4	
te2	.235	.036	6.4	
te3	.407	.047	8.8	
te4	.252	.037	6.8	
td1	.146	.023	6.2	
td2	.311	.035	8.9	
td3	.115	.022	5.2	
td4	.116	.017	6.9	
td5	.064	.014	4.5	
td6	.149	.019	7.9	
td7	.113	.012	9.6	
td8	.010*	.000	0.0	
td9	.111	.012	9.5	

* Fixed parameter

EXHIBIT 43

ML Structural Parameter Estimates For Hypothesis-3

Parameter	H-3 Estimate (S.E.)	H-3.1 Estimate (S.E)	H-3.2 Estimate (S.E)	H-3.3 Estimate (S.E)
Ga11	-.372 (.116)	-.263 (.069)		
Ga12	.101 (.086)		-.054 (.068)	
Ga13	.111 (.099)			-.125 (.065)
phi12	.338 (.070)			
Phi13	.579 (.079)			
Phi23	-.159 (.069)			
Psi	.700 (.092)	.707 (.092)	.773 (.099)	.759 (.097)

Goodness-Of-Fit Measures				
.sp 2				
CHI-SQUARE:	450.70	25.72	11.36	46.10
d.f. :	60	13	13	13
p-Value :	.000	.019	.580	.000
GFI :	.754	.968	.985	.944
AGFI :	.629	.930	.968	.878
RMR :	.070	.043	.034	.058
SMC-SE :	.088	.078	.003	.021
TCODSE :	.088	.078	.003	.021

constructs contain a number of nonsignificant elements, all with large differences in their magnitudes. Also note that the structural parameter estimates for the two subhypotheses (H-3.2 and H-3.2) are lower than some of the correlations among the manifest variables. This is generally an indication that there is no significant relationship between the corresponding latent variables and the data is forced into an inappropriate structure.

Of the three subhypotheses, H-3.1 provides a moderate fit to data while the model for H-3.2 fits the data very well. However, for both H-3.3 and the overall hypothesis (H-3), all LISREL quantities in Exhibit 43 indicate a poor overall fit.

The Results For Hypothesis-4.

In Hypothesis-4, store performance is posited to be an inverse function of overstoring (H-4.1) and competitive intensity (H-4.2). In the specification of the LISREL model, competitive intensity and overstoring are the latent endogenous variables with seven indicators (y1-y7). Overstoring is the latent exogenous variable measured with one indicator (x1). The correlations among the manifest variables are summarized in Exhibit 44.

The measurement properties of these constructs were discussed in the previous sections. To reiterate briefly, both competitive intensity and performance have fairly high

convergence in measurements and are well differentiated (see Exhibit 44). However, some of the indicators of either concept have low SMC's which suggests that the reliability of individual measurements are not uniform (see Exhibit 45).

Exhibits 46 and 47 present the ML parameter estimates for the measurement and latent variable model. The path analytic schemata in Exhibit 45 summarize the hypothesized relationships in H-4 and provide the standardized estimates.

The structural paramaters for both subhypotheses indicate that the influence of overstoring (H-4.1) and competitive intensity (H-4.2) are in the direction predicted. However, both parameter estimates are less than twice the associated standard errors, and hence, are not statistically significant; similar conclusions hold for the overall hypothesis (H-4).

The two subhypotheses as well as the overall hypothesis provide a good overall fit to data (see Exhibit 47). Although the Chi square measure for H-4.2 is not significant, other measures of goodness of fit (GFI and RMR) indicate that the model does reasonably well in reproducing the correlations in Exhibit 44.

EXHIBIT 44

Correlation Matrix For Hypothesis-4

		DDSTRS	INTCPT1	INTCPT2
DDSTRS	(y1)	1.000		
INTCPT1	(y2)	0.780*	1.000	
INTCPT2	(y3)	0.825*	0.868*	1.000
NPBT	(y4)	-0.196*	-0.116**	-0.127**
NSTSA	(y5)	-0.171*	-0.119**	-0.083ns
NSTFE	(y6)	-0.115**	-0.091ns	-0.060ns
NSTIN	(y7)	-0.231*	-0.134**	-0.101ns
SPCPHH	(x1)	0.305*	0.249*	0.318*

	NPBT	NSTSA	NSTFE	NSTIN
NPBT	1.000			
NSTSA	0.697*	1.000		
NSTFE	0.611*	0.670*	1.000	
NSTIN	0.662*	0.759*	0.673*	1.000
SPCPHH	-0.029ns	-0.025ns	-0.003ns	-0.087ns

* p < .01
** p < .05
*** p < .10
ns Not Significant

TCOD (y Variables) : .994
TCOD (x Variables) : --

EXHIBIT 45

Model Specification And Standardized Estimates For Hypothesis-4

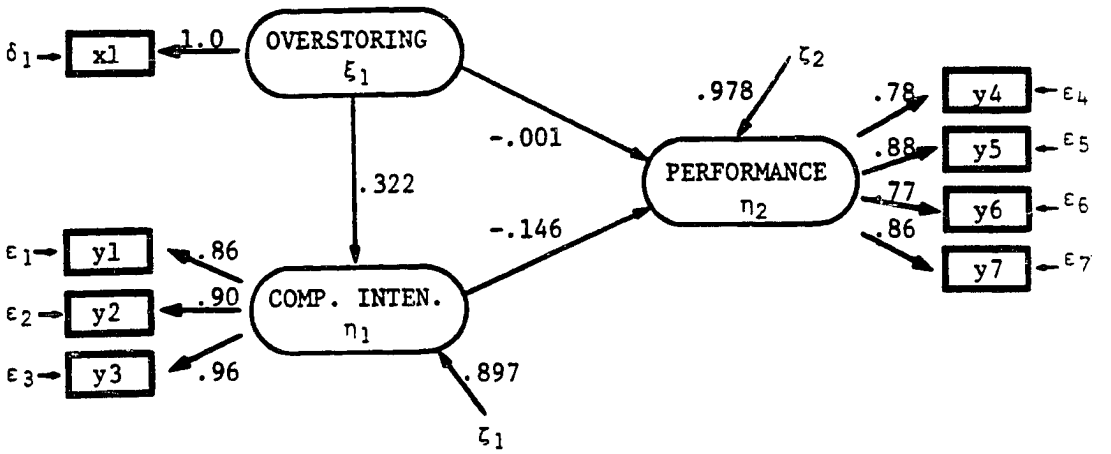

EXHIBIT 46

ML Measurement Paramater Estimates For Hypothesis-4

Parameter	Estimate (ML)	Standard Error	T-Value	SMC
ly1	.900	.045	20.0	.744
ly2	.944	.042	22.6	.818
ly3	1.000*	.000	0.0	.918
ly4	.891	.065	13.7	.615
ly5	1.000*	.000	0.0	.774
ly6	.877	.066	13.4	.596
ly7	.978	.062	15.7	.740
lx1	1.000*	.000	0.0	1.000
te1	.256	.031	8.3	
te2	.182	.027	6.9	
te3	.082	.023	3.5	
te4	.385	.046	8.4	
te5	.226	.036	6.2	
te6	.404	.047	8.6	
te7	.260	.038	6.9	
td1	0.000*	.000	0.0	

* Fixed parameter

EXHIBIT 47

ML Structural Parameter Estimates For Hypothesis-4

Parameter	H-4 Estimate (S.E.)	H-4.1 Estimate (S.E)	H-4.2 Estimate (S.E)
be21	-.134 (.072)		-.136 (.068)
ga11	.308 (.065)		
ga21	-.001 (.067)	-.042 (.064)	
psi1	.823 (.090)		
psi2	.758 (.097)	.773 (.099)	.758 (.097)

Goodness-Of-Fit Measures

.sp 2			
CHI-SQUARE:	25.64	3.58	20.17
d.f. :	18	5	13
p-Value :	.108	.611	.091
GFI :	.971	.993	.975
AGFI :	.943	.980	.945
RMR :	.033	.016	.035
SMC-SE1 :	.103	.002	.022
SMC-SE2 :	.022		
TCODSE :	.103	.002	.022

The Relations Between Elements Of Market Demand, Supply And Unit Conduct

The Results For Hypothesis-5.

In Hypothesis-5, the two elements of market supply are related to two elements of unit conduct. In the first set of relationships, "managerial effectiveness" is posited to be a direct, positive function of overstoring (H-5.1) and competitive intensity (H-5.2). In the second set of relationships, "marketing effectiveness" is hypothesized to be a positive function of overstoring (H-5.3) and competitive intensity (H-5.4).

In the specification of the overall model (H-5), managerial and marketing effectiveness, and competitive intensity are the latent endogenous variables, collectively measured by eleven indicators (y1-y11). Overstoring, with one indicator (x1), is the latent exogenous variable. The product-moment correlations for the manifest variables are given in Exhibit 48.

The measurement triangle for managerial effectiveness indicate that the indicators of this concept are highly correlated, statistically significant and fairly uniform in magnitude, indicating high convergence in measurement. Managerial effectiveness is also well differentiated from other concepts.

However, measurement properties of the marketing effectiveness concept present several problems. First note that correlations in the measurement triangle for this concept are statistically significant. But the correlations for LOCAT variable are nearly half the size of the other correlations. Second, the pattern of correlations for LOCAT also suggests that this measure has very little common variance with the other three indicators. Finally, the SMC for LOCAT [.190] (see discussion of H-8) is significantly lower than the minimum acceptable reliability for any one measure (i.e., 50 percent trait variance). Hence, in the LISREL analyses, LOCAT variable is deleted from the indicator set for the marketing effectiveness concept.[158]

Exhibit 49 summarizes the hypothesized relationships in H-5, and provides the standardized parameter estimates. Note that the link between overstoring and competitive intensity are from H-2, while the link between managerial and marketing effectiveness is from H-8. The ML parameter estimates for the measurement and structural models are given in Exhibits 50 and 51.

The structural parameter estimates for all four subhypotheses have signs opposite to the ones predicted in H-5. However, of the four subhypotheses, only H-5.2 (i.e.,

---

[158] For a third indicator of marketing effectiveness, ATMOS, squared multiple correlation is also low (.508), indicating high measurement error. However, this variable is retained in the statistical analyses.

EXHIBIT 48

Correlation Matrix For Hypothesis-5

		DDSTRS	INTCPT1	INTCPT2
DDSTRS	(y1)	1.000		
INTCPT1	(y2)	0.780*	1.000	
INTCPT2	(y3)	0.825*	0.868*	1.000
MGREFF	(y4)	-0.102ns	-0.007ns	-0.030ns
MGRSKL	(y5)	-0.112***	-0.070ns	-0.097ns
MGRACH	(y6)	-0.095ns	-0.051ns	-0.030ns
MGRSAT	(y7)	-0.074ns	-0.045ns	-0.037ns
SERVC	(y8)	-0.323*	-0.319*	-0.360*
OFFER	(y9)	-0.383*	-0.416*	-0.434*
ATMOS	(y10)	-0.185*	-0.182*	-0.223*
LOCAT	(y11)	-0.070ns	-0.159**	-0.141**
SPCPHH	(x1)	0.305*	0.249*	0.318*

		MGREFF	MGRSKL	MGRACH	MGRSAT
MGREFF		1.000			
MGRSKL		0.771*	1.000		
MGRACH		0.765*	0.659*	1.000	
MGRSAT		0.862*	0.736*	0.740*	1.000
SERVC		0.078ns	0.066ns	0.073ns	0.068ns
OFFER		0.093ns	0.067ns	0.063ns	0.088ns
ATMOS		0.158**	0.095ns	0.071ns	0.092ns
LOCAT		0.042ns	0.032ns	0.048ns	0.074ns
SPCPHH		-0.099ns	-0.101ns	-0.085ns	-0.054ns

		SERVC	OFFER	ATMOS	LOCAT	
SERVC		1.000				
OFFER		0.729*	1.000			
ATMOS		0.643*	0.590*	1.000		
LOCAT	===>	0.395*	0.306*	0.372*	1.000	<===
SPCPHH		-0.108ns	-0.078ns	-0.070ns	-0.048ns	

* p < .01
** p < .05
*** p < .10
ns Not Significant

TCOD (y Variables) : .993
TCOD (x Variables) : --

EXHIBIT 49

Model Specification And Standardized Estimates For Hypothesis-5

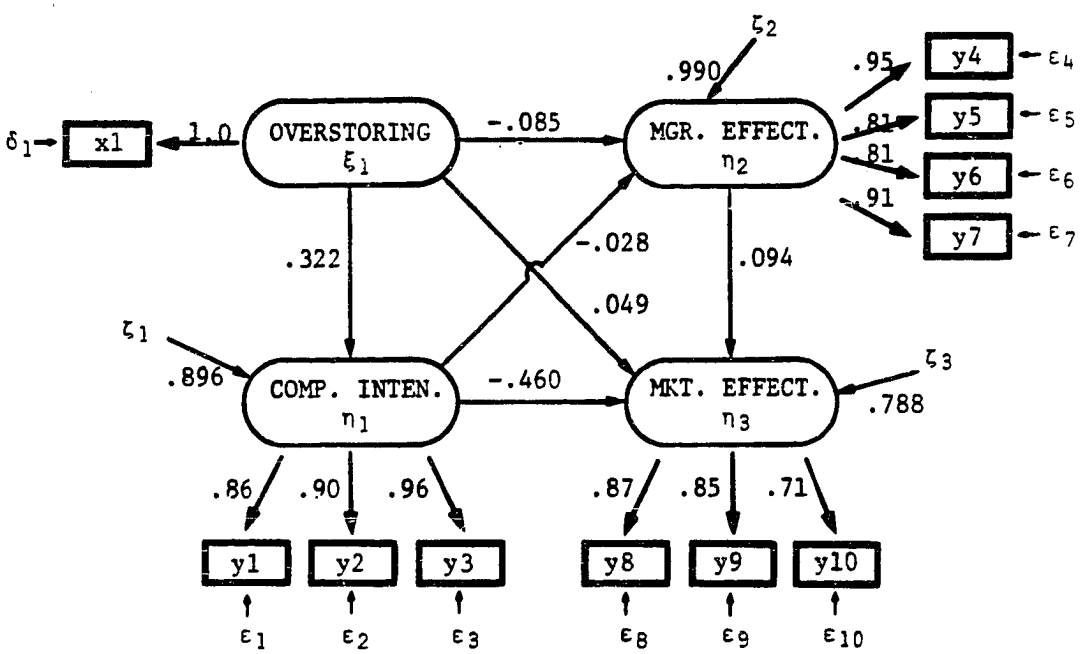

EXHIBIT 50

ML Measurement Paramater Estimates For Hypothesis-5

Parameter	Estimate (ML)	Standard Error	T-Value	SMC
ly1	.894	.045	20.1	.740
ly2	.938	.041	22.7	.814
ly3	1.000*	.000	0.0	.925
ly4	1.000*	.000	0.0	.898
ly5	.857	.050	17.2	.660
ly6	.854	.050	17.1	.656
ly7	.960	.042	22.8	.827
ly8	1.000*	.000	0.0	.758
ly9	.971	.076	12.8	.714
ly10	.819	.075	11.0	.508
lx1	1.000*	.000	0.0	1.000
te1	.260	.031	8.4	
te2	.186	.026	7.1	
te3	.075	.023	3.3	
te4	.102	.022	4.6	
te5	.340	.038	9.0	
te6	.344	.038	9.1	
te7	.173	.025	6.9	
te8	.242	.049	4.9	
te9	.286	.050	5.8	
te10	.492	.057	8.6	
td1	0.000*	.000	0.0	

* Fixed parameter

EXHIBIT 51

ML Structural Parameter Estimates For Hypothesis-5

Param.	H-5 Estimate (S.E.)	H-5.1 Estimate (S.E)	H-5.2 Estimate (S.E)	H-5.3 Estimate (S.E)	H-5.4 Estimate (S.E)
be21	-.027		-.055		
	(.076)		(.072)		
be31	-.416				-.408
	(.068)				(.065)
be32	.086				
	(.064)				
ga11	.310				
	(.065)				
ga21	-.081	-.095			
	(.071)	(.066)			
ga31	-.042			-.089	
	(.062)			(.067)	
psi1	.829				
	(.090)				
psi2	.890	.786	.609		
	(.098)	(.107)	(.086)		
psi3	.597			.890	.918
	(.085)			(.098)	(.099)
Goodness-Of-Fit Measures					
CHI-SQUARE	45.18	.23	16.50	1.96	13.01
d.f.	39	2	13	5	8
p-Value	.229	.891	.223	.854	.112
GFI	.962	.999	.978	.996	.979
AGFI	.936	.997	.954	.989	.945
RMR	.034	.006	.026	.011	.045
SMC-SE1	.104	.012	.003	.009	.201
SMC-SE2	.010				
SMC-SE3	.212				
TCODSE	.112	.012	.003	.009	.201

the relationship between competitive intensity and marketing effectiveness) is statistically significant.

All of the subhypotheses as well as the overall hypothesis (H-5) fit the data very well. Average residuals in all model specifications are relatively low, and in every case the Chi square measure is statistically significant (see Exhibit 51).

The Results For Hypothesis-6.

In Hypothesis-6, market demand potential (H-6.1) and growth in demand (H-6.2) are posited to have a direct, positive influence on managerial effectiveness. Here, the two demand variables are the latent exogenous concepts, measured with six indicators (x1-x6). Managerial effectiveness is the latent endogenous variable with four indicators (y1-y4). Exhibit 52 provides the correlations among all the manifest variables.

Within construct correlations among the indicators of each of the three latent variables indicate high reliability in measurements. The correlations across these indicators also indicate high differentiation among all three constructs.[159]

[159] Note that compared to the elements in the respective measurement triangles, the correlations "across" the indicators of demand potential and growth are very low. Hence, the problem of differentiation among demand constructs is essentially between the quality and potential of demand, and not among the two discussed above.

The path analytic schemata in Exhibit 53 summarize the hypothesized relationships in H-6 and provide the standardized estimates. The ML parameter estimates for the measurement and latent variable model are given in Exhibits 54 and 55.

The direction of influence for H-6.1 (i.e., the link between demand potential and managerial effectiveness) is as predicted in H-6. However, note that in both the specification of the subhypotheses and the overall model (H-6), this estimate is nearly equal to zero and, in either case, it is not statistically significant.[160] For the subhypothesis H-6.2 (i.e., the relationship between demand growth and managerial effectiveness), the sign of the structural parameter estimate is opposite to the one hypothesized but it is not statistically significant.

Of the two submodels, the two construct relationship of H-6.1 fits the data very well while the subhypothesis H-6.2 provides a moderate fit. The average residuals for the overall hypothesis (H-6) are large compared to the correlations of Exhibit 52 and the Chi square measure is not significant, indicating a poor overall fit to data.

---

[160] Given the correlations in Exhibit 52, this is not surprising. Note that half of the correlations among the indicators of these concepts are negative, and the other half are positive. More importantly none of these correlations are statistically different from zero.

EXHIBIT 52

Correlation Matrix For Hypothesis-6

		MGREFF	MGRSKL	MGRACH	MGRSAT
MGREFF	(y1)	1.000			
MGRSKL	(y2)	0.771*	1.000		
MGRACH	(y3)	0.765*	0.659*	1.000	
MGRSAT	(y4)	0.862*	0.736*	0.740*	1.000
TINCHH	(x1)	0.057ns	0.076ns	0.001ns	-0.036ns
THSNVA	(x2)	0.049ns	0.083ns	0.006ns	-0.027ns
TRNTVA	(x3)	-0.055ns	-0.005ns	-0.021ns	-0.116ns
TINCGP	(x4)	-0.030ns	-0.026ns	-0.024ns	-0.039ns
TINCGH	(x5)	-0.038ns	-0.072ns	-0.070ns	-0.020ns
POPG	(x6)	-0.022ns	-0.037ns	-0.071ns	-0.016ns

	TINCHH	THSNVA	TRNTVA
TINCHH	1.000		
THSNVA	0.909*	1.000	
TRNTVA	0.881*	0.886*	1.000
TINCGP	-0.066ns	-0.084ns	-0.166**
TINCGH	-0.164**	-0.135**	-0.234*
POPG	-0.148**	-0.049ns	-0.215*

	TINCGP	TINCGH	POPG
TINCGP	1.000		
TINCGH	0.940*	1.000	
POPG	0.869*	0.938*	1.000

* p < .01
** p < .05
*** p < .10
ns Not Significant

TCOD (y Variables) : .951
TCOD (x Variables) : 1.000

EXHIBIT 53

Model Specification And Standardized Estimates For Hypothesis-6

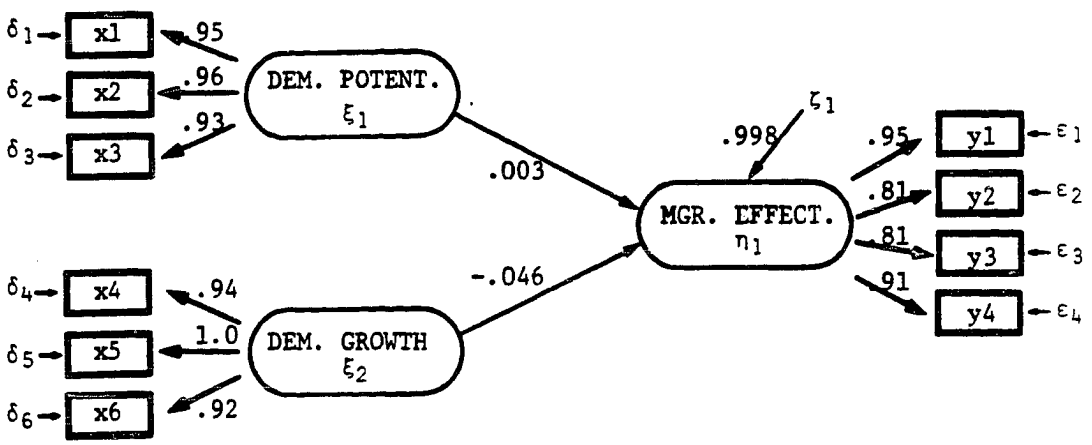

EXHIBIT 54

ML Measurement Paramater Estimates For Hypothesis-6

Parameter	Estimate (ML)	Standard Error	T-Value	SMC
ly1	1.000*	.000	0.0	.897
ly2	.858	.050	17.2	.660
ly3	.855	.050	17.1	.656
ly4	.961	.042	22.8	.828
lx1	.990	.028	34.8	.903
lx2	1.000*	.000	0.0	.915
lx3	.966	.032	30.4	.859
lx4	.949	.024	39.7	.891
lx5	1.000*	.000	0.0	.990
lx6	.920	.020	45.8	.884
te1	.103	.022	4.7	
te2	.340	.038	9.0	
te3	.344	.038	9.1	
te4	.172	.025	6.8	
td1	.097	.014	6.8	
td2	.085	.015	5.6	
td3	.141	.017	8.3	
td4	.109	.011	9.5	
td5	.101	.013	9.2	
td6	.116	.012	9.6	

* Fixed Parameter

EXHIBIT 55

ML Structural Parameter Estimates For Hypothesis-6

Parameter	H-6 Estimate (S.E)	H-6.1 Estimate (S.E)	H-6.2 Estimate (S.E)
ga11	.003 (.071)	.055 (.075)	
ga12	-.043 (.068)		-.042 (.068)
psi	.895 (.099)	.892 (.104)	.895 (.099)
Goodness-Of-Fit Measures			
CHI-SQUARE:	112.68	2.65	37.22
d.f. :	33	4	14
p-Value :	.000	.618	.001
GFI :	.910	.995	.956
AGFI :	.850	.981	.913
RMR :	.070	.020	.014
SMC-SE :	.002	.003	.002
TCODSE :	.002	.003	.002

The Results For Hypothesis-7.

In Hypothesis-7, managerial expertness, measured by two indicators (x1,x2), is posited to have a direct, positive influence on managerial effectiveness. As in previous hypotheses tests, managerial effectiveness is measured by four indicators (y1-y4). The correlations among the manifest variables are given in Exhibit 56.

In the discussion of H-5, it was noted that managerial effectiveness has a high degree of convergence in measurement. The correlations across the indicators in Exhibit 56 indicate that the two concepts are also well differentiated. Since managerial expertness is measured with only two indicators, an assessment of reliability can not be made by examining the correlations. However, the SMC's in Exhibit 58, as well as the standardized (measurement) parameter estimates in Exhibit 57, provide single measure reliability for each indicator. The squared multiple correlation for MGRYRS indicates that the reliability of this variable is lower than the minimum acceptable level in most LISREL analyses.

Exhibit 59 provides the results of LISREL analyses from two alternative model specifications. In H-7, the MGRYRS variable is retained as an indicator of managerial expertness, despite the large measurement error present in this variable. In H-7M, MGRYRS is deleted from the analysis

and the LISREL model is reestimated with a single indicator (x2) of managerial expertness.

Exhibit 58 and 59 provide the ML parameter estimates for the measurement and latent variable models for H-7. The hypothesized relationship is summarized in a path analytic schema in Exhibit 57.

The structural parameter estimates from either model specification are nearly identical and are in the direction predicted. In both H-7 and H-7M, the parameter estimate is statistically significant. However, of the two alternative model specifications, H-7M provides a better fit to data (see Exhibit 59).

The Results For Hypothesis-8.

In Hypothesis-8, marketing effectiveness is posited to be a direct and positive function of managerial effectiveness. Here, marketing effectiveness is the latent endogenous variable, measured by four indicators (y1-y4). Managerial effectiveness, also measured by four indicators (x1-x4), is the latent exogenous variable. The correlations among the eight manifest variables are given in Exhibit 60.

The measurement properties of the two constructs were summarized in the discussion of H-5. It will be recalled that one of the indicators of the marketing effectiveness construct, LOCAT, was determined to be an unreliable measure and deleted from the analyses of H-5.

EXHIBIT 56

Correlation Matrix For Hypothesis-7

	MGREFF	MGRSKL	MGRACH	MGRSAT
MGREFF	1.000			
MGRSKL	0.771*	1.000		
MGRACH	0.765*	0.659*	1.000	
MGRSAT	0.862*	0.736*	0.740*	1.000
MGRYRS	0.098ns	0.114***	0.188**	0.216*
MGRRTL	0.202*	0.193*	0.187*	0.283*

	MGRYRS	MGRRTL
MGRYRS	1.000	
MGRRTL	0.626*	1.000

* p < .01
** p < .05
*** p < .10
ns Not Significant

TCOD (y Variables) : .945
TCOD (x Variables) : .959

EXHIBIT 57

Model Specification And Standardized Estimates For Hypothesis-7

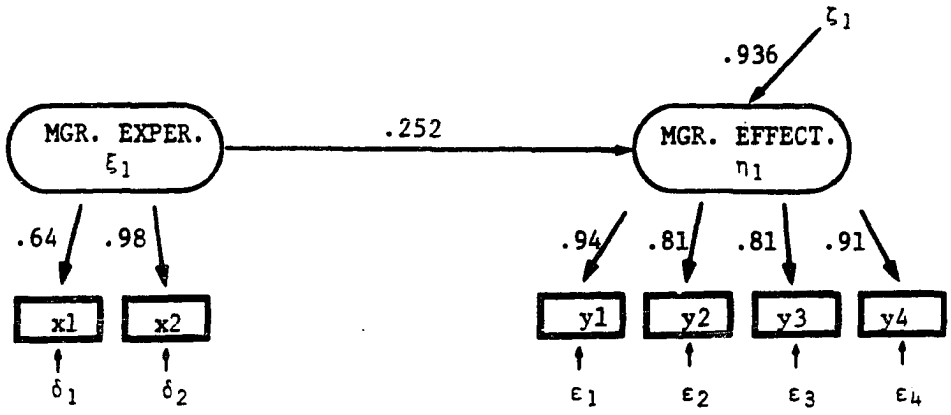

EXHIBIT 58

ML Measurement Paramater Estimates For Hypothesis-7

Parameter	Estimate (ML)	Standard Error	T-Value	SMC	
ly1	1.000*	.000	0.0	.891	
ly2	.861	.050	17.1	.660	
ly3	.858	.050	17.0	.656	
ly4	.967	.042	22.9	.834	
lx1	.654	.225	2.9	.409	<===
lx2	1.000*	.000	0.0	.957	
te1	.109	.022	4.9		
te2	.340	.038	9.0		
te3	.344	.038	9.0		
te4	.166	.025	6.7		
td1	.591	.148	4.0		
td2	.043	.319	0.1		

* Fixed parameter

EXHIBIT 59

ML Structural Parameter Estimates For Hypothesis-7

Parameter	H-7 Estimate (S.E)	H-7.M Estimate (S.E)
ga11	.243 (.104)	.233 (.065)
psi	.835 (.095)	.837 (.093)
Goodness-Of-Fit Measures		
CHI-SQUARE:	17.81	6.89
d.f. :	8	5
p-Value :	.023	.229
GFI :	.973	.987
AGFI :	.930	.962
RMR :	.027	.017
SMC-SE :	.064	.061
TCODSE :	.064	.061

Here, the LISREL analysis is conducted on two alternative model specifications. In the first model (H-8), LOCAT variable is retained as an indicator of marketing effectiveness. In the second model, (H-8M), LOCAT is deleted from the LISREL analysis. The standardized estimates for the measurement and structural relations obtained for H-8 are shown in Exhibit 61. ML parameter estimates for the same parameters are given in Exhibits 62 and 63.

The structural parameter estimates and the overall goodness of fit of the two alternative models are nearly identical. In either specification, the parameter estimate is in the direction predicted. However the path coefficients for either model specification (H-8 and H-8M) are not statistically significant.

The Chi square value for both models are small compared to degrees of freedom. However, the average of the residuals are lower for H-8M, indicating a better overall fit to data in H-8M (see Exhibit 63).

The Results For Hypothesis-9.

In Hypothesis-9, a third variable, relative size of unit, is added to the relations of H-8. Here, relative size of unit is posited to have a direct and positive influence on both the managerial (H-9.1) and marketing effectiveness

EXHIBIT 60

Correlation Matrix For Hypothesis-8

		SERVC	OFFER	ATMOS	LOCAT
SERVC	(y1)	1.000			
OFFER	(y2)	0.729*	1.000		
ATMOS	(y3)	0.643*	0.590*	1.000	
LOCAT	(y4)	0.395*	0.306*	0.372*	1.000
MGREFF	(x1)	0.078ns	0.093ns	0.158**	0.042ns
MGRSKL	(x2)	0.066ns	0.067ns	0.095ns	0.032ns
MGRACH	(x3)	0.073ns	0.063ns	0.071ns	0.048ns
MGRSAT	(x4)	0.068ns	0.088ns	0.092ns	0.074ns

	MGREFF	MGRSKL	MGRACH	MGRSAT
MGREFF	1.000			
MGRSKL	0.771*	1.000		
MGRACH	0.765*	0.659*	1.000	
MGRSAT	0.862*	0.736*	0.740*	1.000

* p < .01
** p < .05
*** p < .10
ns Not Significant

TCOD (y Variables) : .877
TCOD (x Variables) : .946

EXHIBIT 61

Model Specification And Standardized Estimates For Hypothesis-8

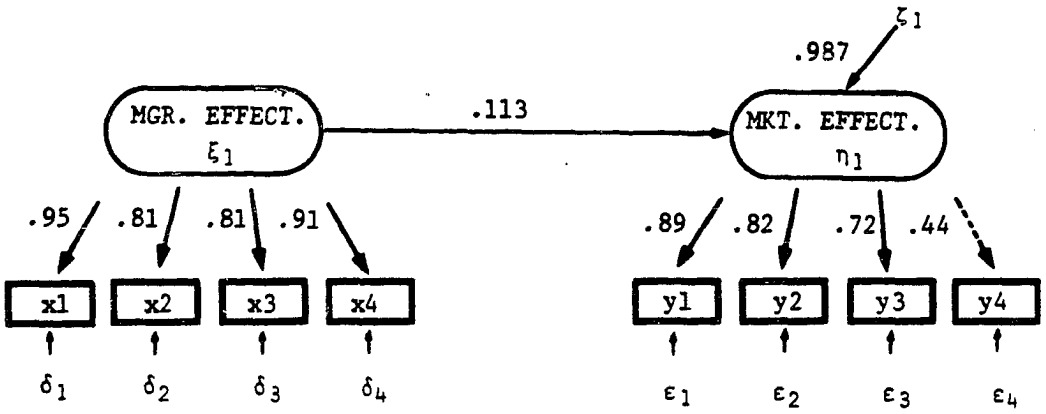

EXHIBIT 62

ML Measurement Paramater Estimates For Hypothesis-8

Parameter		Estimate (ML)	Standard Error	T-Value	SMC	
ly1		1.000*	.000	0.0	.800	
ly2		.904	.072	12.5	.655	
ly3		.814	.072	11.3	.530	
ly4	===>	.487	.078	6.2	.190	<===
lx1		1.000*	.000	0.0	.897	
lx2		.858	.050	17.2	.660	
lx3		.855	.050	17.1	.656	
lx4		.961	.042	22.8	.828	
te1		.200	.049	4.1		
te2		.345	.051	6.8		
te3		.470	.056	8.4		
te4	===>	.810	.082	9.9		
td1		.103	.022	4.6		
td2		.340	.038	9.0		
td3		.344	.038	9.1		
td4		.172	.025	6.8		

* Fixed parameter

EXHIBIT 63

ML Structural Parameter Estimates For Hypothesis-8

Parameter	H-8 Estimate (S.E)	H-8.M Estimate (S.E)
ga11	.107 (.071)	.106 (.071)
phi	.790 (.099)	.780 (.099)

Goodness-Of-Fit Measures		
CHI-SQUARE:	15.16	9.19
d.f. :	19	13
p-Value :	.712	.759
GFI :	.983	.988
AGFI :	.968	.974
RMR :	.021	.018
SMC-SE :	.013	.013
TCODSE :	.013	.013

(H-9.2).[161] In model specification, the latter two concepts are the latent endogenous variables. The correlations among the seven indicators of dependent constructs (y1-y7) and one indicator of relative size (x1) are given in Exhibit 64.

The path analytic schemata in Exhibit 65 summarize the hypothesized relations. The ML parameter estimates for the measurement and latent variable model are presented in the Exhibits 66 and 67. Note that in Exhibit 67, two alternative model specifications are shown for the overall hypothesis. Here, H-9 is a less restrictive model where the relationship between managerial and marketing effectiveness are retained in LISREL analyses.[162] In the second model specification (H-9M) this link is fixed to zero, implying that no relationship exists between the two endogenous concepts.

The structural parameter estimates for both of the subhypotheses (H-9.1 and H-9.2), as well as the two alternative specifications of the overall model (H-9 and H-9M), are nearly identical. All of the path coefficients are also in the direction predicted and statistically

---

[161] Note, however, the operationalization of the relative size is a reversed variable where the size of the competitor is compared to the focal retail unit. Hence, a structural parameter with a negative sign would be "confirming" the hypothesized relationship.

[162] It will be recalled that the results from the previous analyses (H-8) indicated that this link is not statistically significant.

EXHIBIT 64

Correlation Matrix For Hypothesis-9

		MGREFF	MGRSKL	MGRACH	MGRSAT
MGREFF	(y1)	1.000			
MGRSKL	(y2)	0.771*	1.000		
MGRACH	(y3)	0.765*	0.659*	1.000	
MGRSAT	(y4)	0.862*	0.736*	0.740*	1.000
SERVC	(y5)	0.078ns	0.066ns	0.073ns	0.068ns
OFFER	(y6)	0.093ns	0.067ns	0.063ns	0.088ns
ATMOS	(y7)	0.158**	0.095ns	0.071ns	0.092ns
LOCAT	(y8)	0.042ns	0.032ns	0.048ns	0.074ns
CSTCS	(x1)	-0.165**	-0.135***	-0.144**	-0.150**

	SERVC	OFFER	ATMOS	LOCAT
SERVC	1.000			
OFFER	0.729*	1.000		
ATMOS	0.643*	0.590*	1.000	
LOCAT	0.395*	0.306*	0.372*	1.000
CSTCS	-0.498*	-0.543*	-0.437*	-0.224*

* p < .01
** p < .05
*** p < .10
ns Not Significant

TCOD (y Variables) : .992
TCOD (x Variables) : --

EXHIBIT 65

Model Specification And Standardized Estimates For Hypothesis-9

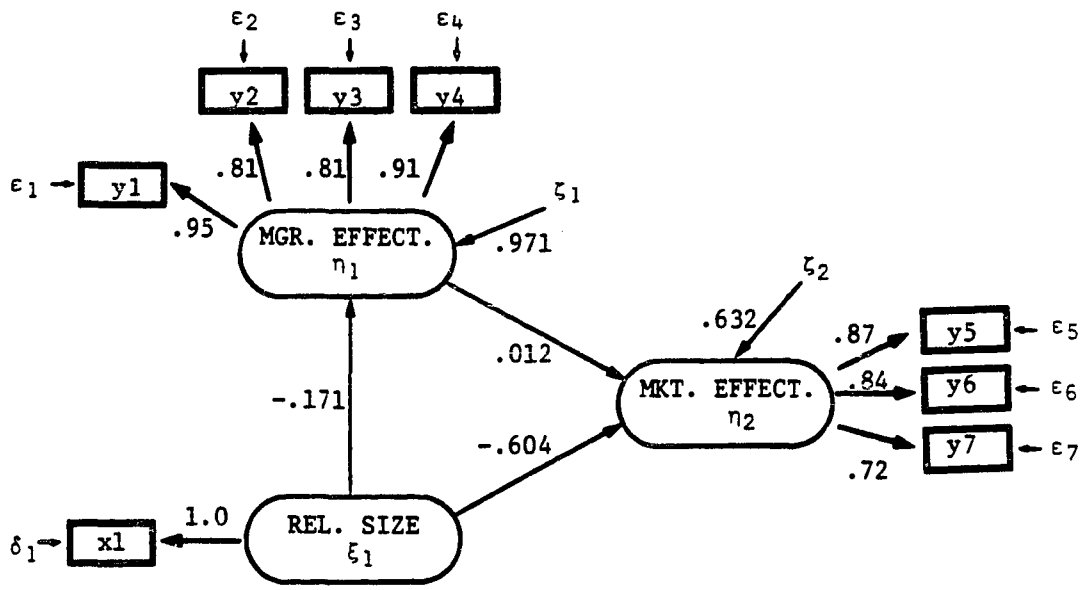

EXHIBIT 66

ML Measurement Paramater Estimates For Hypothesis-9

Parameter	Estimate (ML)	Standard Error	T-Value	SMC
ly1	1.000*	.000	0.0	.897
ly2	.858	.050	17.2	.660
ly3	.855	.050	17.1	.656
ly4	.961	.042	22.8	.828
ly5	1.000*	.000	0.0	.748
ly6	.974	.073	13.3	.710
ly7	.837	.074	11.3	.524
lx1	1.000*	.000	0.0	1.000
te1	.103	.022	4.7	
te2	.340	.038	9.0	
te3	.344	.038	9.1	
te4	.172	.025	6.9	
te5	.252	.046	5.5	
te6	.290	.047	6.2	
te7	.476	.056	8.6	
td1	0.000*	.000	0.0	

* Fixed parameter

EXHIBIT 67

ML Structural Parameter Estimates For Hypothesis-9

Parameter	H-9 Estimate (S.E)	H-9.M Estimate (S.E)	H-9.1 Estimate (S.E.)	H-9.2 Estimate (S.E.)
be21	.011 (.058)			
ga11	-.162 (.066)	-.164 (.067)	-.162 (.066)	
ga21	-.523 (.057)	-.524 (.056)		-.524 (.056)
psi1	.871 (.096)	.868 (.102)	.871 (.096)	
psi2	.473 (.069)	.473 (.069)		.473 (.069)
Goodness-Of-Fit Measures				
CHI-SQUAR	12.42	10.16	.20	3.22
d.f.	18	13	5	2
p-Value	.825	.681	.999	.199
GFI	.986	.987	1.000	.992
AGFI	.972	.972	.999	.962
RMR	.018	.020	.003	.016
SMC-SE1	.029	.030	.029	
SMC-SE2	.368	.367		.367
TCODSE	.378	.380	.029	.367

significant.

All four models fit the data very well. However, note that although the "omission" of the relationship between managerial and marketing effectiveness does not alter the conclusions of LISREL analyses, the resulting goodness of fit measures indicate that H-9 specification does a better job in reproducing the correlations in Exhibit 64.

The Results For Hypothesis-10.

In Hypothesis-10, the target market reach is posited to have a direct and positive effect on managerial (H-10.1) and marketing effectiveness (H-10.2). Furthermore, it is also hypothesized that target market reach is negatively associated with competitive intensity (H-10A). In the specification of the LISREL model, target market reach is the exogenous variable, measured by three indicators (x1-x3). The other three constructs are the latent endogenous variables with eight indicators (y1-y8). The correlations among the manifest variables are given in Exhibit 68.

The correlations in the measurement triangle for target market reach indicate that there is no convergence in measurement. The product-moment correlation between INC14M and CHLD14 is very low and statistically not significant. The results of a LISREL analysis with all three manifest

variables indicate that the SMCs for both INC14M and CHLD14 variables are less than .10. Hence, both of these variables are deleted from LISREL analyses, and H-10 relationships are estimated with a single indicator of target market reach (x1).

Exhibit 69 summarizes the hypothesized relationships in a path analytic schemata. The ML parameter estimates for the measurement and latent variable model are given in Exhibits 70 and 71.

The structural parameter estimates for both H-10A (i.e., the link between target market reach and competitive intensity) and H-10.1 (i.e., the link between target market reach and managerial effectiveness) are in the direction predicted in the research hypotheses. However, only the latter path coefficient (for H-10.1) is statistically significant. The direction of influence for parameter estimate in subhypothesis H-10.2 (i.e., target market reach and marketing effectiveness) is opposite to the one predicted, and it is not statistically significant.

All of the subhypotheses as well as the overall hypothesis (H-10) fit the data well. The Chi square measures for all model specifications are significant, and the average residuals are low compared to correlations of Exhibit 68.

EXHIBIT 68

Correlation Matrix For Hypothesis-10

	DDSTRS (y1)	INTCPT1 (y2)	INTCPT2 (y3)
MINORS	-0.155**	-0.106ns	-0.081ns
CHLD14	-0.001ns	-0.003ns	-0.016ns
INC14M	-0.286*	-0.222*	-0.293*

	MGREFF (y4)	MGRSKL (y5)	MGRACH (y6)	MGRSAT (y7)
MINORS	0.257*	0.162**	0.168**	0.212*
CHLD14	0.154**	0.170**	0.154**	0.192*
INC14M	0.142**	0.052ns	0.164**	0.098ns

	SERVC (y8)	OFFER (y9)	ATMOS (y10)	LOCAT (y11)
MINORS	-0.061ns	-0.137**	-0.053ns	-0.094ns
CHLD14	-0.151**	-0.174**	-0.121**	-0.132**
INC14M	0.137**	0.135***	0.033ns	0.014ns

	MINORS (x1)	CHLD14 (x2)	INC14M (x3)
MINORS	1.000		
CHLD14	0.594*	1.000	
INC14M	0.569*	0.235ns	1.000

* p < .01
** p < .05
*** p < .10
ns Not Significant

TCOD (y Variables) : .999
TCOD (x Variables) : --

EXHIBIT 69

Model Specification And Standardized Estimates For Hypothesis-10

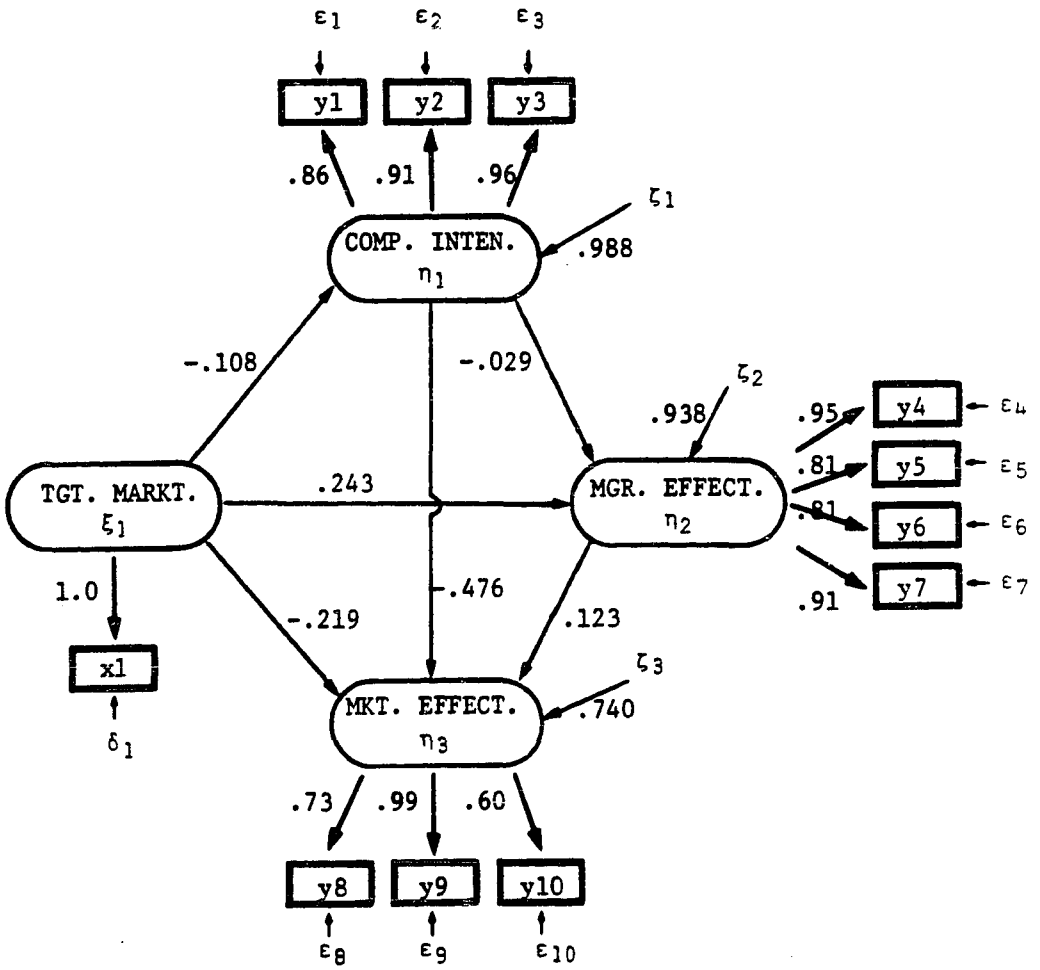

EXHIBIT 70

ML Measurement Paramater Estimates For Hypothesis-10

Parameter	Estimate (ML)	Standard Error	T-Value	SMC	
ly1	.902	.045	20.0	.744	
ly2	.950	.042	22.8	.824	
ly3	1.000*	.000	0.0	.914	
ly4	1.000*	.000	0.0	.902	
ly5	.854	.050	17.2	.657	
ly6	.851	.050	17.1	.653	
ly7	.957	.042	23.0	.826	
ly8	.745	.093	8.1	.543	
ly9	1.000*	.000	0.0	.979	
ly10	.602	.086	7.0	.355	<===
lx1	1.000*	.000	0.0	1.000	
te1	.256	.031	8.3		
te2	.176	.026	6.8		
te3	.086	.023	3.8		
te4	.098	.022	4.5		
te5	.343	.038	9.1		
te6	.347	.038	9.1		
te7	.174	.025	6.9		
te8	.457	.073	6.2		
te9	.021	.105	0.2		
te10	.645	.074	8.7		
td1	0.000*	.000	0.0		

* Fixed parameter

EXHIBIT 71

ML Structural Parameter Estimates For Hypothesis-10

Parameter	H-10 Estimate (S.E)	H-10A Estimate (S.E)	H-10.1 Estimate (S.E)	H-10.2 Estimate (S.E)
be21	-.029 (.071)			
be31	-.492 (.066)			
be32	.129 (.067)			
ga11	-.103 (.067)	-.103 (.067)		
ga21	.231 (.066)		.234 (.065)	
ga31	-.217 (.062)			-.088 (.065)
psi1	.903 (.098)	.905 (.099)		
psi2	.846 (.093)		.846 (.093)	
psi3	.725 (.127)			.780 (.106)
Goodness-Of-Fit Measures				
CHI-SQUARE	40.22	4.58	3.10	2.92
d.f.	38	2	5	2
p-Value	.372	.101	.684	.232
GFI	.966	.989	.994	.993
AGFI	.942	.947	.982	.966
RMR	.029	.021	.014	.020
SMC-SE1	.012	.012	.061	.010
SMC-SE2	.062			
SMC-SE3	.260			
TCODSE	.122	.012	.061	.010

The Relations Between Conduct Elements And Store Performance

The Results For Hypothesis-11.

In the last research hypothesis, H-11, all five elements of unit conduct are collectively related to retail store performance. More specifically, it is posited that managerial effectiveness (H-11.1A), marketing effectiveness (H-11.1B), expertness of management (H-10.2), target market reach (H-11.3), and relative size of unit (H-10.4) have a direct and positive influence on store performance. In the model specification, however, all of these factors are not exogenous variables.

Exhibit 73 provides a summary of the hypthesized relationships and shows the specification of the LISREL model. Note that of the five conduct constructs, two (i.e., managerial and marketing effectiveness) are latent endogenous variables (y1-y7), while the three remaining elements (i.e., managerial expertness, target market reach and relative size of unit) are the exogenous variables (x1-x4). The correlations among all the manifest variables are summarized in Exhibit 72.

The ML parameter estimates for the measurement model is given in Exhibit 74. The structural parameter estimates are summarized in Exhibit 75. Note that in Exhibit 75, only

EXHIBIT 72

Correlation Matrix For Hypothesis-11

		NPBT	NSTSA	NSTFE	NSTIN
NPBT	(y9)	1.000			
NSTSA	(y10)	0.697*	1.000		
NSTFE	(y11)	0.611*	0.670*	1.000	
NSTIN	(y12)	0.662*	0.759*	0.673*	1.000
MGREFF	(y1)	0.481*	0.394*	0.421*	0.427*
MGRSKL	(y2)	0.383*	0.397*	0.376*	0.378*
MGRACH	(y3)	0.466*	0.333*	0.389*	0.390*
MGRSAT	(y4)	0.484*	0.328*	0.426*	0.440*
SERVC	(y5)	0.150**	0.106**	0.148**	0.097ns
OFFER	(y6)	0.207*	0.116***	0.175**	0.164**
ATMOS	(y7)	0.162**	0.193**	0.200*	0.183***
LOCAT	(y8)	0.144**	0.150ns	0.164**	0.169**
MGRAGE	(x1)	0.283*	0.272*	0.156**	0.221*
MGRRTL	(x2)	0.233*	0.242*	0.176**	0.250*
MINORS	(x3)	0.260*	0.284*	0.244*	0.250*
CHLD14	(x4)	0.057ns	0.197*	0.214*	0.272*
INC14M	(x5)	0.330*	0.241*	0.122***	0.332*
CSTCS	(x6)	-0.137**	-0.152**	-0.222*	-0.133**

	MGREFF	MGRSKL	MGRACH	MGRSAT
MGREFF	1.000			
MGRSKL	0.771*	1.000		
MGRACH	0.765*	0.659*	1.000	
MGRSAT	0.862*	0.736*	0.740*	1.000
SERVC	0.078ns	0.066ns	0.073ns	0.068ns
OFFER	0.093ns	0.067ns	0.063ns	0.088ns
ATMOS	0.158**	0.095ns	0.071ns	0.092ns
LOCAT	0.042ns	0.032ns	0.048ns	0.074ns
MGRAGE	0.098ns	0.114***	0.188ns	0.216*
MGRRTL	0.202*	0.193*	0.187*	0.283*
MINORS	0.257*	0.162**	0.168**	0.212*
CHLD14	0.154*	0.170**	0.154**	0.192*
INC14M	0.142**	0.052ns	0.164**	0.098ns
CSTCS	-0.165**	-0.135***	-0.144**	-0.150**

EXHIBIT 72

Correlation Matrix For Hypothesis-11 (Cont.)

	SERVC	OFFER	ATMOS	LOCAT
SERVC	1.000			
OFFER	0.729*	1.000		
ATMOS	0.643*	0.590*	1.000	
LOCAT	0.395*	0.306*	0.372*	1.000
MGRAGE	0.076ns	0.044ns	0.022ns	0.037ns
MGRRTL	0.051ns	0.008ns	0.037ns	0.043ns
MINORS	-0.061ns	-0.137**	-0.053ns	-0.094ns
CHLD14	-0.151**	-0.174**	-0.121***	-0.132***
INC14M	0.137**	0.135***	0.033ns	0.014ns
CSTCS	-0.498*	-0.543*	-0.437*	-0.224*

	MGRAGE	MGRRTL
MGRAGE	1.000	
MGRRTL	0.626*	1.000
MINORS	0.053ns	0.059ns
CHLD14	0.029ns	0.019ns
INC14M	0.117ns	0.020ns
CSTCS	-0.109ns	-0.120***

	MINORS	CHLD14	INC14M	CSTCS
MINORS	1.000			
CHLD14	0.594*	1.000		
INC14M	0.569*	0.235ns	1.000	
CSTCS	-0.017ns	0.034ns	-0.173**	1.000

* p < .01
** p < .05
*** p < .10
ns Not Significant

TCOD (y Variables) : .999
TCOD (x Variables) : --

EXHIBIT 73

Model Specification And Standardized Estimates For Hypothesis-11

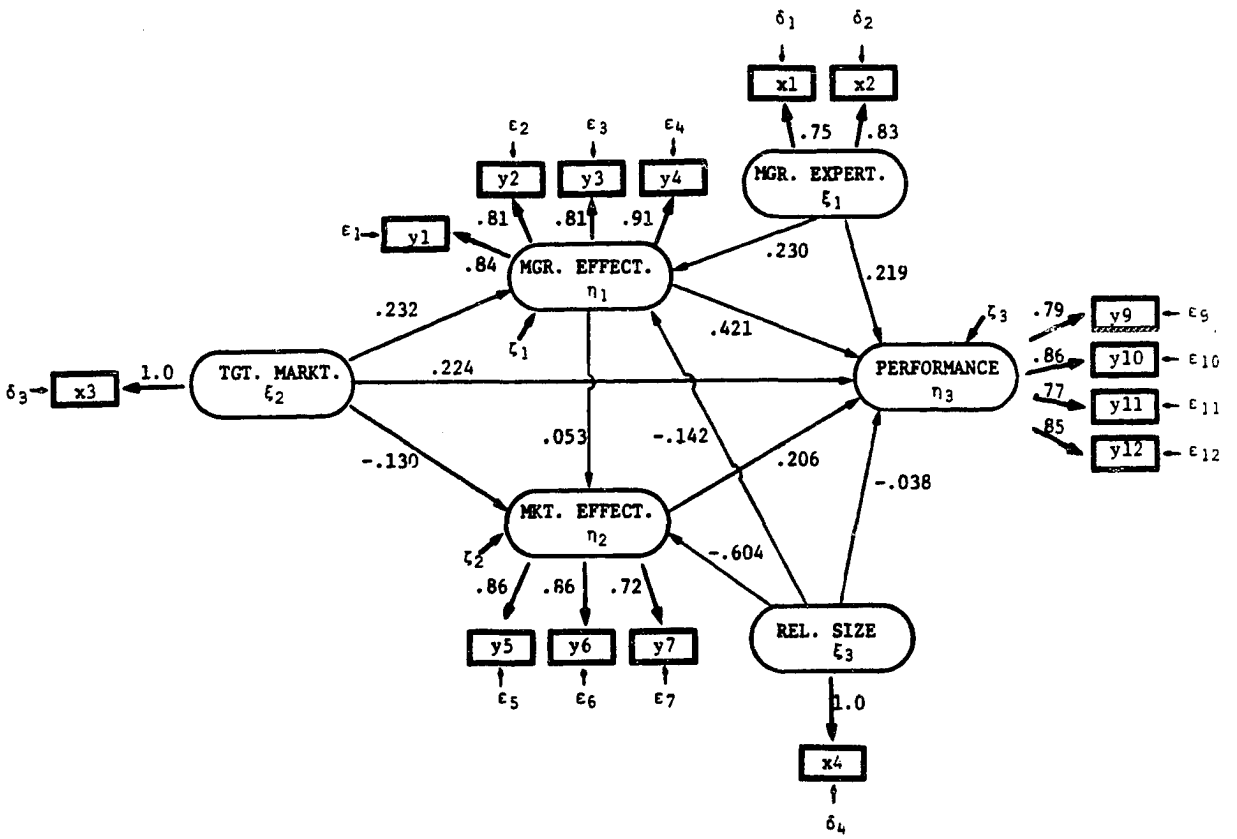

the parameter estimates for the "hypothesized links" are shown.[163] The overall goodness of fit measures for all the subhypotheses as well as the overall hypothesis (H-11) are presented separately in Exhibit 76.

The second column in Exhibit 75 summarizes the structural parameters obtained from the individual subhypothesis. All of the parameter estimates are in the direction predicted and are statistically significant.[164]

In general, all the subhypotheses fit the data well. With the exception of H-11.1A, Chi square measure for all submodels are significant, and the residuals from all five model specifications are low compared to the correlations of Exhibit 72. However, the fit of the overall model (H-11) is not as good as those obtained from the submodels. Nonetheless, both the GFI and RMR quantities indicate a moderate fit to data.

---

[163] For a proper specification of these submodels, one needs to add or delete the appropriate psi's in the structural equations.

[164] It should be recalled that the operational measure for relative size of unit is reversed. Hence, negative sign for this parameter estimate is also in the expected direction.

EXHIBIT 74

ML Measurement Paramater Estimates For Hypothesis-11

Parameter	Estimate (ML)	Standard Error	T-Value	SMC
ly1	1.000*	.000	0.0	.894
ly2	.860	.050	17.1	.661
ly3	.858	.050	17.0	.658
ly4	.964	.042	22.8	.830
ly5	1.000*	.000	0.0	.727
ly6	1.002	.074	13.5	.729
ly7	.849	.075	11.3	.524
ly8	.919	.067	13.8	.637
ly9	1.000*	.000	0.0	.754
ly10	.894	.068	13.2	.603
ly11	.988	.064	15.4	.736
lx1	.907	.206	4.4	.568
lx2	1.000*	.000	0.0	.690
lx3	1.000*	.000	0.0	1.000
lx4	1.000*	.000	0.0	1.000
te1	.106	.022	4.9	
te2	.339	.037	9.1	
te3	.342	.038	9.1	
te4	.170	.025	6.9	
te5	.273	.046	6.0	
te6	.271	.046	5.9	
te7	.476	.055	9.0	
te8	.363	.044	8.3	
te9	.246	.036	6.8	
te10	.397	.046	8.6	
te11	.264	.037	7.2	
td1	.432	.013	3.3	
td2	.310	.015	2.0	
td3	0.000*	.000	0.0	
td4	0.000*	.000	0.0	

* Fixed Parameter

EXHIBIT 75

ML Structural Parameter Estimates For Hypothesis-11

Parameter	H-11 Estimate (S.E)	Estimate (S.E)	Subhypothesis
be21	.048 (.061)		
be31	.385 (.063)	.501 (.063)	<== (H-11.1A)
be32	.208 (.087)	.204 (.077)	<== (H-11.1B)
ga11	.260 (.094)		
ga21	-.034 (.073)		
ga31	.226 (.080)	.389 (.100)	<== (H-11.2)
ga12	.218 (.063)		
ga22	-.111 (.053)		
ga23	.193 (.054)	.276 (.062)	<== (H-11.3)
ga31	-.134 (.063)		
ga32	-.517 (.056)		
ga33	.032 (.068)	-.164 (.063)	<== (H-11.4)
psi1	.769 (.087)		
psi2	.445 (.066)		
psi3	.446 (.063)		

EXHIBIT 76

Goodness Of Fit Measures For Hypothesis-11

Goodness-Of-Fit Measures	H-11.1A	H-11.1B	H-11.2	H-11.3	H-11.4
CHI-SQUARE:	45.15	14.71	7.69	1.38	5.04
d.f. :	19	13	8	5	5
p-Value :	.001	.326	.464	.926	.411
GFI :	.954	.981	.988	.997	.991
AGFI :	.913	.959	.968	.992	.972
RMR :	.037	.034	.023	.008	.022
SMC-SE1 :	.298	.042	.126	.098	.035
SMC-SE2 :					
SMC-SE3 :					
TCODSE :	.298	.042	.126	.098	.035

Goodness-Of-Fit Measures	H-11
CHI-SQUARE:	124.64
d.f. :	80
p-Value :	.001
GFI :	.934
AGFI :	.900
RMR :	.043
SMC-SE1 :	.127
SMC-SE2 :	.391
SMC-SE3 :	.396
TCODSE :	.530

Parameter Estimates For More Complex Models

In the preceding section, the models for individual subhypotheses involved simple, two construct relationships. In the test of the overall hypotheses, the relationships among multiple constructs were examined. In this final section, results of LISREL analyses for more complex models are reported.

In the development of research hypotheses, there was some speculation whether the set of relationships between market conditions and unit behavior, and their collective impact on retail store performance, were similar across metropolitan and nonmetropolitan stores. However, in all the previous LISREL models, the hypotheses tests were performed for the sample of 211 stores, regardless of their market location. In this section, two sets of complex models are evaluated.

First, the relationships between market supply conditions, unit behavior and store performance are collectively examined for all stores (N=211). Then, the same set of relationships are tested for two separate subsamples of metropolitan (N=112) and nonmetropolitan (N=99) market stores. Second, the general model is expanded further, incorporating some of the demand conditions into the analyses. These relationships are also evaluated for all stores, as well as the two subsamples.

Since the measurement properties of all concepts were discussed in the previous sections, correlation matrices for these models are not reported. Furthermore, in order to simplify the presentation of the LISREL results, only the standardized structural parameter estimates are shown on the path diagrams. The measures of goodness of fit and the level of significance of the path coefficients are also given on each exhibit.

It should be noted that both of these models are extremely large and the sample size of this study is fairly small. In the first model, 53 independent parameters are estimated, while in the second model, the number of parameter estimates is 78. Hence, especially for the subsamples, the results of LISREL analyses have only heuristic value and the parameter estimates as well as the goodness of fit measures should be viewed with caution.

A Model Of Supply Structure, Unit Conduct and Retail Store Performance

In the first complex model, the relationships among market supply elements, unit behavior and retail store performance are examined. The path analytic schemata of Exhibit 77 summarize all the linkages for the total sample. Here, overstoring, measured by a single indicator, is the exogenous latent variable. All other variables represent endogenous latent concepts. Target market reach and

relative size of unit are also measured by one indicator. Managerial effectiveness and performance have four indicators, while marketing effectiveness has three, and the managerial expertness has two measures (see the previous section for empirical definitions).

For all stores, overstoring has a positive and significant influence on competitive intensity. None of the other links from overstoring to conduct elements or to performance are significant. The results from LISREL analysis indicate that competitive intensity has an inverse relationship with marketing effectiveness, i.e., higher competitive intensity adversely affecting marketing effectiveness. All other links between competitive intensity and conduct elements are not statistically significant.

Each of the links between target market reach, managerial and marketing effectiveness, and store performance are significant. However, note that the influence of target market reach on marketing effectiveness is negative, contrary to a priori expectation.

There appears to be no significant relationship between managerial effectiveness and marketing effectiveness. However, each of these factors has a positive and significant influence on retail store performance. The relative impact of managerial

effectiveness is also more than twice the magnitude of influence for marketing effectiveness. On the other hand, managerial expertness has an equally important effect on both the effectiveness of management and store performance.

Relative size of unit has a direct and significant impact on the effectiveness of marketing effort, a relatively smaller effect on managerial effectiveness, and an insignificant negative impact on store performance. It will be recalled that the empirical measure of relative size was defined as the competitor's total retail space to the total space of the focal unit. Hence, to the extent that the retail unit has smaller capacity in relation to the main competitor in the marketplace, the marketing and managerial effectiveness of the unit is significantly and adversely affected.

The results of a similar analysis for metropolitan market stores are summarized in Exhibit 78. In general, the conclusions for the overall sample of stores also hold for this subsample. But there are also some differences in the LISREL results.

For example, note that the relationships between (a) overstoring and performance; and (b) target market reach and marketing effectiveness are opposite to those reported for all stores. Furthermore, several path coefficients have significant differences in their magnitudes.

EXHIBIT 77

Supply Conditions, Unit Behavior and Retail Store Performance-- All Stores

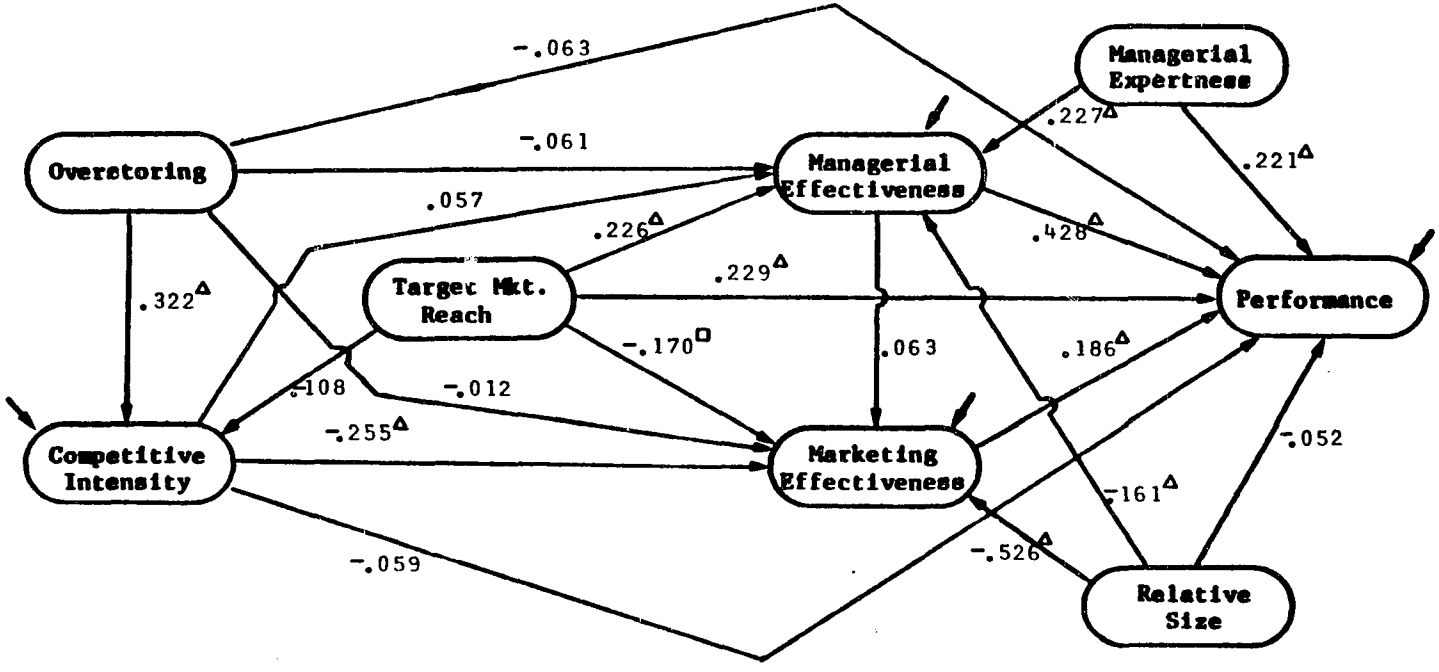

χ^2 : 302.81
d.f.: 137 [p=.000]
GFI : .884
RMR : .094

Δ : p < .01
□ : p < .05

For example, marketing effectiveness is no longer a significant influencer of store performance, while relative size of store has an important and adverse impact on the same. Similarly, competitive intensity for metropolitan stores has a lesser influence on marketing efffectiveness, but the impact of relative overstoring is now more important on the same factor. Also note that the relationship between overstoring and competitive intensity is far stronger for metropolitan stores.

Relative size of unit and managerial expertness both have similar impacts on the managerial effectiveness, store performance, and managerial effectiveness. In almost all cases, the relationships generally appear to be stronger than was the case with the all store sample.

The results of the same model for nonmetropolitan stores are given in Exhibit 79. All of the links for this subsample mirror the findings for all stores. The relationships between all latent variables are in the same direction, but the magnitude or degree of influence among them are quite different.

For example, the results of LISREL analysis for nonmetropolitan stores suggest that relative size of unit is a crucial factor in the marketplace. The direct inflence of this factor on marketing effectiveness is significantly larger than for metropolitan stores. Hence, the indirect

EXHIBIT 78

Supply Conditions, Unit Behavior and Retail Store Performance-- Metro Stores

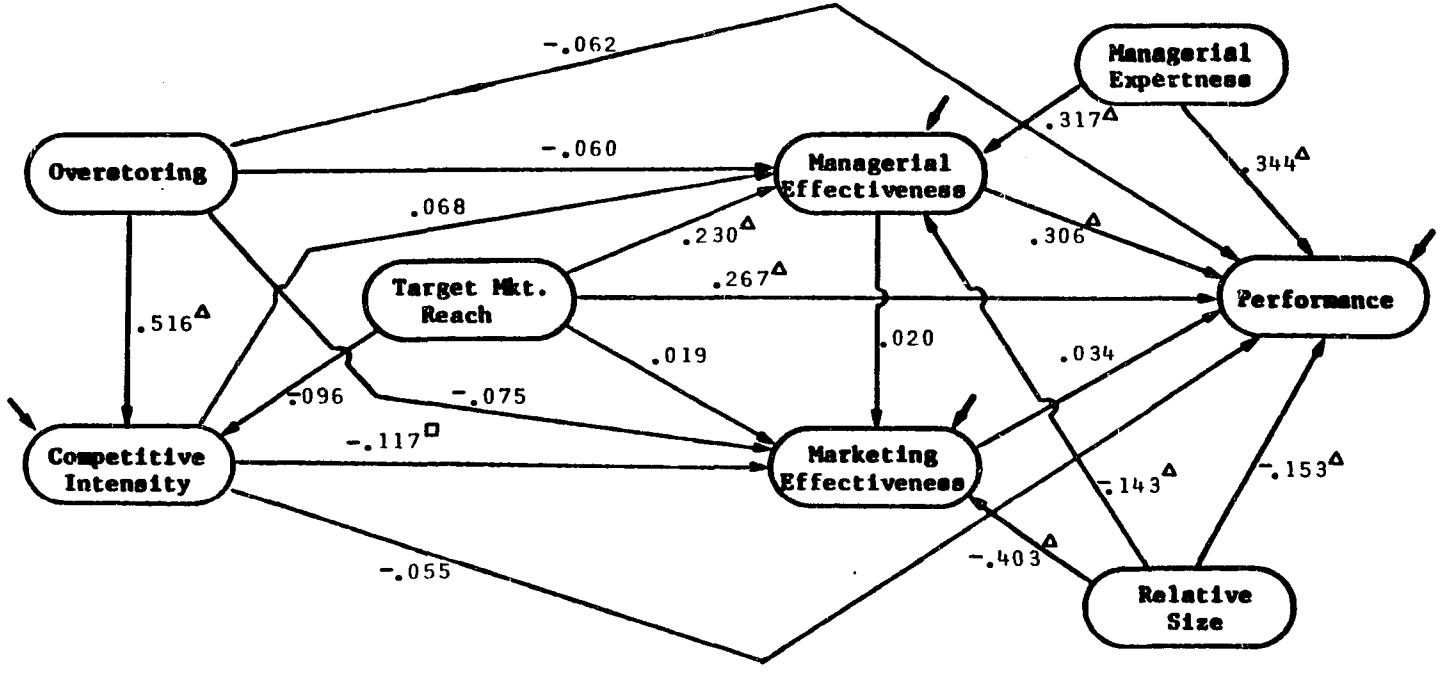

χ^2 : 287.20
d.f. : 137 [p=.000]
GFI : .798
RMR : .120

Δ : p < .01

□ : p < .05

EXHIBIT 79

Supply Conditions, Unit Behavior and Retail Store Performance-- Nonmetro. Stores

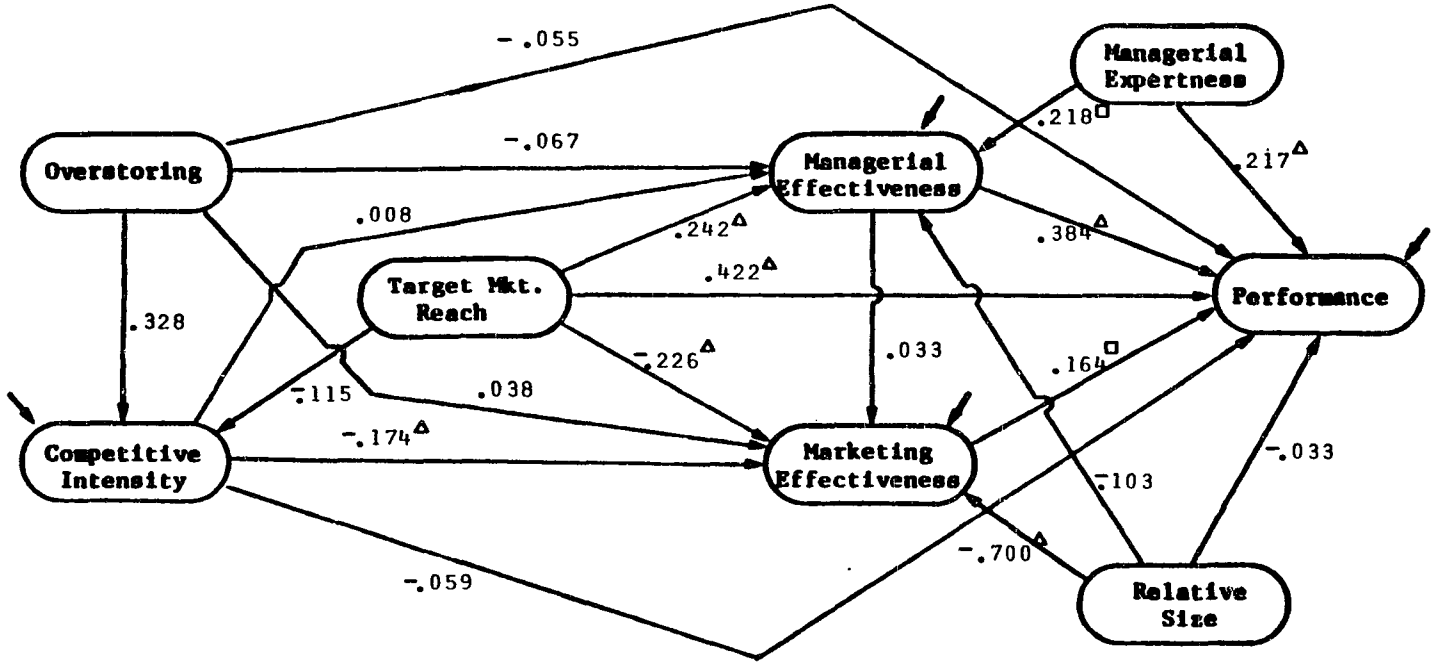

χ^2 : 237.46
d.f.: 137 [p=.000]
GFI : .810
RMR : .108

Δ : p < .01
□ : p < .05

impact of relative size on store performance is greater than its direct influence on the same. Note that target market reach is also a far more important factor for nonmetropolitan stores than it is for metropolitan stores. The same variable also has a large and inverse relationship to marketing effectiveness, in contrast to the positive but insignificant relationship found in metropolitan stores.

A Model Of Market Structure, Unit Conduct and Retail Store Performance

In the second set of complex models, two elements of market demand (i.e. demand quality and potential) are added to the previous relationships.[165] A preliminary LISREL solution indicated that demand growth had no significant relationship with any of the eight previous variables, and hence, was not included in these analyses.[166]

Exhibit 80 summarizes the relationships among the ten constructs in a path analytic schemata for all stores. In general, the addition of the two exogenous demand

---

[165] In the specification of LISREL models, demand character is measured by two variables (AVGINC and AVGRTV). The potential demand is also operationalized using two indicators (TINCHH and THSNVA).

[166] Also recall that the character of demand and growth were not well differentiated concepts. In the preliminary LISREL analyses, the iterations with demand growth as a third variable did not converge and several quantities were outside the admissable parameter space (e.g., negative variances, correlations greater than one in magnitude).

variables has an enhancing affect on all parameter estimates. Hence, the conclusions with respect to relationships between supply conditions, unit behavior and store performance also hold here.

Two links that were not formally introduced as research hypotheses are specified in this model. The first link is a direct relationship between demand character to competitive intensity, and the second is also a direct relationship between demand potential and marketing effectiveness. For the sample of all stores, none of these links are statistically significant.[167]

For all stores, the quality of market demand (i.e., demand character) appears to have a conducive effect on relative overstoring in the marketplace. Demand potential, on the other hand, has a strong depressing effect on the same. The latter relationship, it will be recalled, is contrary to the a priori expectation from the first research hypothesis. Demand potential also has a strong positive impact on the competitive intensity in the marketplace.

In chapters 4 and 5, it was suggested that the empirical measures of demand potential may have a "confounding" effect on the theoretical variable of interest. More specifically, the measurement of total incomes, housing and rent values with uniform trade area

[167] These links will be useful in the interpretation of the results in the next chapter.

definitions may have the effect of producing a set of indicators that not only represents "potential demand" but also, what may be termed, "density of demand." Furthermore, it was conjectured that the level of rent and housing values may equally indicate, in addition to demand potential, the "scarcity of housing" in the marketplace. Clearly, all three concepts are interrelated, (i.e., the higher the potential demand in a given, fixed geographical space, the higher the density of demand, and possibly, the higher the demand for housing).

When the relationships of Exhibit 80 are interpreted with this post hoc conceptualization, the results apppear plausible. For example, as prior research suggests, the more densely populated areas are less conducive to new retail entries as well as expansion of existing facilities. Hence, the negative influence of "demand potential" over overstoring. Similarly, the more densely populated and higher income areas would also have a larger proportion of intercept competitors, which are a dislocative force in the marketplace, and hence the positive relationship between "demand potential" and competitive intensity.

Exhibits 81 and 82 summarize the same relationships for metropolitan and nonmetropolitan stores respectively. Several things are evident from the results of these two LISREL analyses. First, note that the path coefficient

EXHIBIT 80

Market Conditions, Unit Behavior and Retail Store Performance-- All Stores

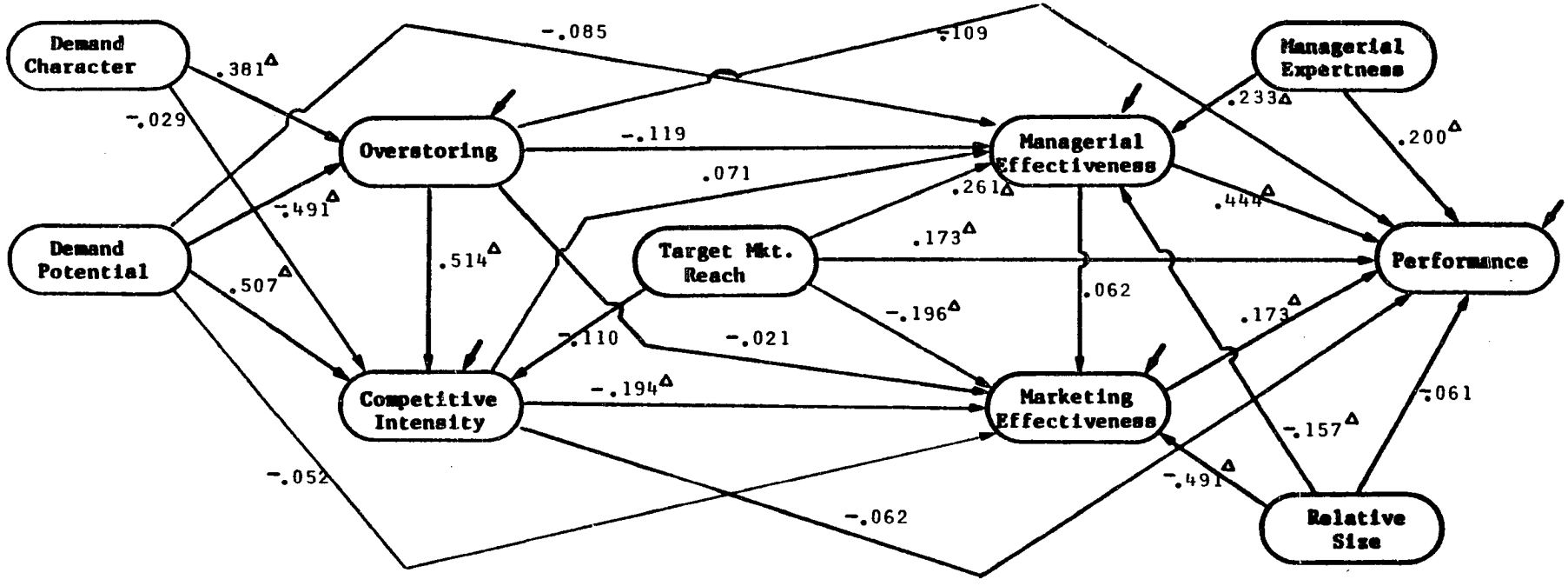

χ^2 : 554.07
d.f.: 198 [p=.000]
GFI : .841
RMR : .096

Δ : p < .01
□ : p < .05

EXHIBIT 81

Market Conditions, Unit Behavior and Retail Store Performance-- Metro. Stores

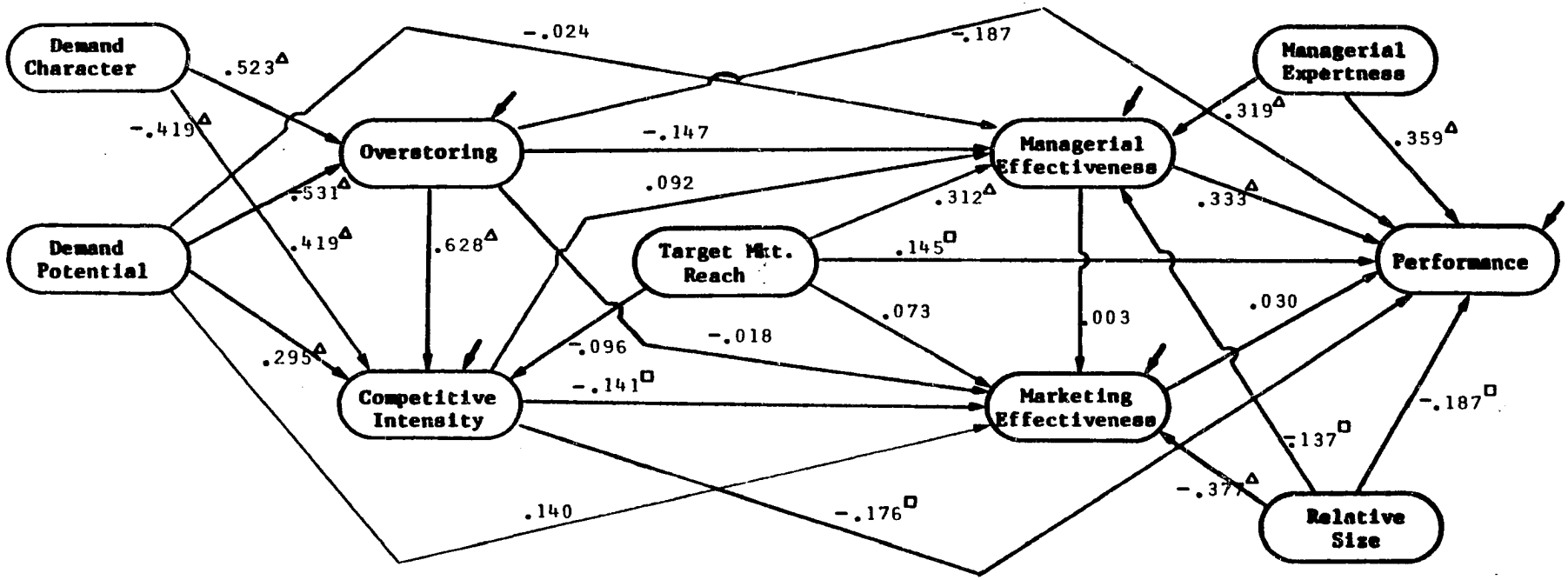

χ^2 : 435.30
d.f.: 198 [p=.000]
GFI : .772
RMR : .112

Δ : p < .01
□ : p < .05

EXHIBIT 82

Market Conditions, Unit Behavior and Retail Store Performance-- Nonmetro. Stores

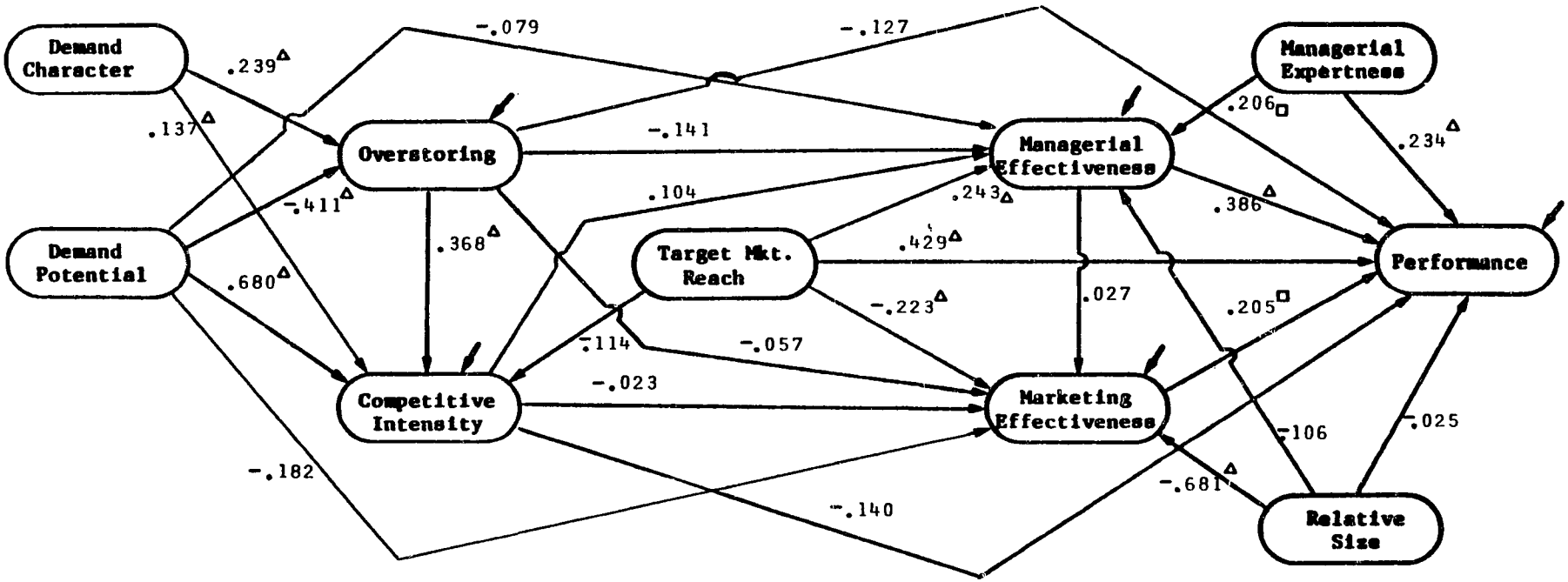

χ^2 : 366.41
d.f.: 198 [p=.000]
GFI : .771
RMR : .127

Δ : p < .01
□ : p < .05

between demand character and competitive intensity are both statistically significant,[168] but of opposite signs. Second, also note the changes in the magnitudes of the path coefficients linking "demand potential" to both overstoring and competitive intensity.

As it was speculated in Chapter 5, the "interpretational confounding" of demand potential is "greater" for metropolitan stores than it is for nonmetropolitan stores. Recall that all metro market trading areas are uniformly one-and-one half miles in radius. Hence, one would expect the relative size of both of these coefficients to be larger for these market locations than for other stores. This conjecture is partially corroborated in these results.

As to the reverse signs of path coefficients between demand quality and competitive intensity, a plausible post hoc explanation could be found in the focus units' locations within metropolitan and nonmetropolitan markets. In general, metropolitan stores in the sample are predominantly in the inner city locations, and hence, the "quality of demand" is rather low. Thus, the demand character does not appear to have a positive influence on the competitive intensity (i.e., disproportional presence of intercept

---

[168] Given the number of data points in the two samples, and the number of parameters estimates in these models, this conclusion should be a tempered one.

competitors). For nonmetropolitan stores, where the trading area generally spans the city limits or beyond, this conjecture, of course, does not necessarily hold.

CHAPTER VII

AN INTERPRETATION OF RESULTS AND CONCLUSIONS

At the conclusion of Chapter 4, it was noted that the value of the proposed linkages in this study lie not so much in their simple, one-to-one associations, but rather in the role they play within the overall network of relationships. For this reason, the results from statistical analyses in the preceding chapter were presented without a lengthy discussion or an evaluation. In this final chapter, a brief summary and interpretation of findings are performed and the results from more complex, multiple construct relationships are evaluated. Following an overall assessment of the empirical analyses, the managerial implications of the research are noted. This chapter, and the study, concludes with some further thoughts and reflections on the research.

Organization Of The Chapter

This chapter is in three major sections. In the first section, a summary and interpretation of the findings are presented. Next, the implications of the results for the management of retail enterprises are summarized. In the final section, the significance of this research for theory, methodology and practice are noted and a number of suggestions for future investigations are outlined.

An Interpretation Of Results From Empirical Analyses

The results from empirical analyses of the twenty eight [28] subhypotheses are summarized in Exhibit 83. The structural parameter estimates for these hypotheses indicate that only eighteen [18] of the twenty eight individual relationships are "statistically" significant. Furthermore, of the proposed linkages, only seventeen [17] are in the direction predicted by the research hypotheses.

Given the objectives and the orientation of this study, however, these "win-loss" statistics may be misleading. In order to put things in perspective, it is useful to briefly review the major theme of this study and to reiterate the rationale behind the construction and development of some of these research hypotheses.

Objectives Of The Research Revisited

It will be recalled that this study began by noting several conceptual and methodological limitations of the "macro" orientation in previous retailing performance research (see Chapter 1). More specifically, it was argued that these studies were based on a faulty conceptualization of the retail "industry" and, hence, they had little relevance in practical terms. Thus, this investigation was undertaken with the basic premise that there is a significant need to reformulate the "conventional" thinking

on the determinants of retailing performance. This, it was argued, can best be accomplished by looking at retailing in microcosm, (i.e., at the level of the retail store, see Chapter 2).

Following a selective review of the retailing performance studies, a series of research hypotheses and conjectures were derived, based partly on the "conventional" thinking, and in part, on the insights provided by the more recent retail patronage research.

In the development and construction of the research hypotheses, and especially those due to the conventional, macro approach, it was noted that some of these linkages were based on certain "behavioral assumptions" attributed to a group of retail units. Hence, in the statement of some of these research hypotheses, several competing, implicit paradigms were explicated (see Chapter 4). Furthermore, in the proposed "network" of structural and simultaneous relationships, many of the ceteris paribus assumptions of the conventional reasoning were effectively removed from the analyses. Thus, in the development of both the conceptual basis for this study, and the formulation of the research hypotheses, there was always the expectation that some of the relationships would indeed "fail," when confronted with the data from the real world.

For these reasons, the results from empirical, statistical analyses of this study should not be evaluated solely on the basis of the "statistical" significance of the structural parameters. In fact, in many cases, some of the path coefficients obtained in this research are important precisely because of their "statistical insignificance."

An Evaluation Of Statistical Results

Exhibit 83 provides a summary of all the findings from the "individual tests" of the research hypotheses. Chronologically, the first group of relationships [H-1 and H-2] concern the direct linkages between the demand and supply conditions in the marketplace. In the second group, these "market conditions" are first related to store performance [H-3 and H-4], and then to two elements of unit conduct [H-5 and H-6]. In the third group of research hypotheses, the elements of unit conduct are first interrelated, [H-7 through H-10], and finally, are collectively linked to store performance [H-11].

An Evaluation Of Research Results-- H-1 and H-2.

The findings from empirical analyses indicate that all of the theoretical relationships between demand and supply conditions, with the exception of those involving the "demand potential" variable, are in the direction predicted and statistically significant.

EXHIBIT 83

A Summary Of Results From Empirical Analyses

PROPOSED LINKS	RELATIONSHIP	PREDICTION/ (ESTIMATE)	GOODNESS OF FIT
H-1.1	Dem. Charac. ==> Overstoring	+ / (+)*	Good
H-1.2	Dem. Potent. ==> Overstoring	+ / (-)*	Modr
H-1.3	Dem. Growth. ==> Overstoring	+ / (+)*	Modr
H-2.1	Dem. Potent. ==> Compet. Int	- / (+)*	Poor
H-2.2	Overstoring ==> Compet. Int	+ / (+)*	Good
H-3.1	Dem. Charac. ==> Performance	+ / (-)*	Modr
H-3.2	Dem. Potent. ==> Performance	+ / (-)ns	Good
H-3.3	Dem. Growth. ==> Performance	+ / (-)**	Poor
H-4.1	Overstoring ==> Performance	- / (-)ns	Good
H-4.2	Comp. Inten. ==> Performance	- / (-)**	Good
H-5.1	Overstoring ==> Mgr. Effect	+ / (-)ns	Good
H-5.2	Overstoring ==> Mkt. Effect	+ / (-)ns	Good
H-5.3	Comp. Inten. ==> Mgr. Effect	+ / (-)ns	Good
H-5.4	Comp. Inten. ==> Mkt. Effect	+ / (-)**	Good
H-6.1	Dem. Potent. ==> Mgr. Effect	+ / (+)ns	Good
H-6.2	Dem. Growth. ==> Mgr. Effect	+ / (-)ns	Good

* p < 1
** p < 5
ns Not gnificant

EXHIBIT 83

A Summary Of Results From Empirical Analyses (Cont.)

PROPOSED LINKS	RELATIONSHIP	PREDICTION/ (ESTIMATE)	GOODNESS OF FIT
H-7	Mgr. Expert. ==> Mgr. Effect	+ / (+)*	Good
H-8	Mgr. Effect. ==> Mkt. Effect	+ / (+)ns	Good
H-9.1	Relat. Size ==> Mgr. Effect	- / (-)*	Good
H-9.2	Relat. Size ==> Mkt. Effect	- / (-)*	Good
H-10.A	Tgt. Market ==> Comp. Inten	- / (-)ns	Good
H-10.1	Tgt. Market ==> Mgr. Effect	+ / (+)*	Good
H-10.2	Tgt. Market ==> Mkt. Effect	+ / (-)ns	Good
H-11.1A	Mgr. Effect. ==> Performance	+ / (+)*	Modr
H-11.1B	Mkt. Effect. ==> Performance	+ / (+)*	Good
H-11.2	Mgr. Expert. ==> Performance	+ / (+)*	Good
H-11.3	Tgt. Market ==> Performance	+ / (+)*	Good
H-11.4	Relat. Size ==> Performance	- / (-)*	Good

* $p < .01$
** $p < .05$
ns Not Significant

These results, in general, reinforce the conclusions of prior research at both the macro and micro level analyses. Specifically, at the level of individual store trading areas, in both metropolitan and nonmetropolitan markets, favorable demand conditions (i.e., demand quality and growth) appear to have a strong positive influence on relative overstoring in the marketplace.

However, this general conclusion, based on the ceteris paribus assumption may need to be modified when all three variables are considered simultaneously (H-1). In the latter case, of the three demand elements, "demand growth" is not only of lesser influence on overstoring, but in both metropolitan and nonmetropolitan markets, it is no longer a (statistically) significant factor[169] (see Exhibits 33 and 35 in Chapter 6). As to the negative (and statistically significant) influence of "demand potential" on overstoring, two possible post hoc interpretations can be advanced.

The first plausible alternative "explanation" can be attributed to the presence of an "interpretational confounding" in the empirical content of the demand potential construct. More specifically, when the total incomes, housing and rent values are computed within a uniformly defined, fixed geographical space, one risks these

---

[169] In the more complex models, demand character remains to be a positive and (statistically) significant factor in all the analyses.

indicators to be reflective of not only the "aggregate amount of purchasing power," but also the "concentration of demand," and even, the "scarcity of housing." This situation, of course, is true for all metropolitan market stores in this study.

However, since this uniformity in trading area definitions does not apply to nonmetropolitan markets, in Chapter 5 it was conjectured that the difficulty in the interpretation of this factor could be resolved if the same set of relationships were tested separately for the two subsamples. Here, the a priori expectation was that, if demand potential indicators were indeed "measuring" the aggregate purchasing power, and given that H-1.2 was true, then its relation to overstoring in nonmetropolitan trading areas would be in the direction hypothesized (i.e., the structural parameter estimate would be positive and significant).

The results from the complex models for the two samples, however, do not support this conjecture (see Exhibits 81 and 82 in Chapter 6). The path coefficient between "demand potential" and overstoring for metropolitan [-.531] and nonmetropolitan markets [-.411] are both negative and statistically significant [$p < .01$]. Similar results (not shown in the study) are obtained when the simple, two construct relationships are tested for the two subsamples.

The second plausible alternative "explanation" can be attributed to the possibility of a "statistical artifact" which may arise due to the empirical definitions of both demand potential and overstoring. This conjecture is based on the premise that the relationships between "ratio" variables have special statistical characteristics which may "favor" one direction of association over another.[170] As Schuessler (1975) notes

> In general, the correlations between opposite component terms (numerator - denominator) will tend to depress the correlation between ratios, whereas the correlation between adjacent terms (numerator - numerator) will tend to elevate it, other things being equal. When these tendencies are confirmed in a substantive investigation, one may be concerned that the outcome is no more than a statistical artifact. When these tendencies are reversed, one's concern is with the specific conditions that brought about that reversal and their possible substantive significance (p.386).

Hence, as in the case of demand potential and overstoring, when two highly correlated components [population and households] appear as opposite terms in the empirical measures of both concepts, and according to Schuessler's criteria, a negative correlation would be expected. This possibility, however, can be discounted for two reasons.

---

[170] There is a growing literature on this topic. Several articles, building upon the work of Pearson (1897), can be found in the sociology literature. For a sample of these papers, see, Long (1979), Fuguitt and Lieberson (1973), Freeman and Kronenfeld (1973), Kasarda and Nolan (1979), Mac Millan and Daft (1979), Chayes and Kruskal (1966) and Schuessler (1973,1975).

First, two of the three indicators of demand potential, [THSNVA and TRNTVA], have no common components with the operational measure of overstoring, and yet, the correlations across these indicators are still in the same direction. Second, a similar communality in the component terms between the measures of overstoring and competitive intensity (i.e., total retail space) does not appear to influence the direction of correlations, as it is suggested by Schuessler (1975). On the contrary, these findings are supportive of the conclusions reached by Long (1979) in that

> this belief [i.e., ratio variables have built-in dependencies], despite its intuitive appeal, is groundless. The use of ratio variables with common components in theory building, regardless of the relative position of the shared component, does not constrain or make more likely one sign or direction over another (p.38).

Thus, it appears that the possibility of an "interpretational confounding" is still the more plausible of the two alternative explanations.[171] According to this conjecture, and possibly unique to this study, "demand potential" in both metropolitan and nonmetropolitan markets seems to represent a multifaceted construct, possibly more reflective of the concentration of population and housing

---

[171] This conclusion, of course, assumes that H-1.2 is generally a plausible hypothesis. The conjecture that high potential demand has a "depressive" influence on (the creation of) supply potential is not logically consistent with either the realities of the marketplace or the assumption of a profit seeking enterprise in economic theory.

than aggregate purchasing power in the trading area. This post hoc interpretation of the statistical results is generally consistent with the findings of prior research (e.g., Hall et al 1961). More specifically, previous research suggests that markets which are characterized by higher levels of "population and housing density" are less conducive to expansion of existing facilities and/or to the entry of new retailers into the trading area.[172] Hence, it seems reasonable to conclude that an "inverse" relationship between "demand potential" and overstoring is a plausible finding.

The findings from the empirical analyses of the second set of hypotheses (H-2) indicate that the theoretical relationship between the demand potential, relative overstoring, and the level of competitive intensity are both positive and (statistically) significant. However, note that only the latter link (H-2.2) is in the direction predicted in the research hypotheses.

The strong positive influence of overstoring on competitive intensity reinforces the conclusions of other researchers (e.g., Davidson 1982, Bucklin 1983). In other words, the findings of this study generally supports the claim that overstoring of retail markets has a "conducive"

---

[172] This conclusion is also consistent with the development and growing importance of planned shopping centers at some distance from the densely populated urban areas.

effect on the level of competitive intensity. Furthermore, as it would also be expected, this effect is much more pronounced in metropolitan markets than in nonmetropolitan markets [.628 vs .368, respectively] (see Exhibit 81 and 82).

The direct and positive relationship between "demand potential" and competitive intensity, however, is quite unexpected. This finding implies that the higher levels of aggregate purchasing power and/or concentration of demand also has a conducive effect on competitive intensity.

A possible reason for this direct, positive relationship may be found in the empirical measures of competitive intensity. As it will be recalled, the presence of discount department retailers (DDSTRS) and the relative importance of intercept stores (INTCP1 and INTCP2) are indicators which reflect the importance of larger scale establishments in the marketplace. Since most of these retailers, in order to sustain their operations, require a large base level demand, the positive relationship between "demand potential" and competitive intensity does not seem implausible. However, note that this post hoc interpretation assumes that "demand potential" is reflective of aggregate purchasing power in the marketplace.

But even when demand potential is interpreted as a "density" notion, the preceding post hoc justification still

appears reasonable. More specifically, if the notion of competitive intensity is indeed partly reflective of larger size retail units, then the "trading area" for these stores are also significantly larger than the one-and-one half mile radius assumed (for metropolitan stores) in this study. Hence, the relationship between "demand potential" and competitive intensity should be considerably stronger in nonmetropolitan markets than it is in metropolitan markets.[173] The complex model relationships seem to support this line of reasoning. Note that the link between "demand potential" and competitive intensity is much stronger [.680] in nonmetropolitan markets, compared to the same link in metropolitan markets [.295] (see Exhibits 81 and 82).

It should also be noted that "demand potential," irrespective of its substantive interpretation, has both a "conducive" direct effect, and a "depressive" indirect effect on competitive intensity. In fact, for metropolitan markets, this inverse indirect effect is large enough to offset the positive direct effect. Hence, when only the "net effect" is considered, the initial expectation expressed in H-2.1 generally holds for metropolitan markets. However, for neither the overall sample of stores nor for nonmetropolitan markets, one can not draw similar

---

[173] This is because the trading areas for nonmetropolitan areas are generally much larger than the one-and-one half miles radius assumed for metropolitan markets.

inferences.

An Evaluation Of Research Results-- H-3 And H-4.

The theoretical relationships between "market conditions" and store performance are summarized in the five subhypotheses of H-3 and H-4. Here, the first set of conjectures represents the "naive" expectation (i.e., ceteris paribus), that favorable demand conditions have a positive direct influence on store performance. In the second set of subhypotheses, it is similarly conjectured that unfavorable supply conditions also have a direct but negative influence on store performance.

The results of the empirical analyses indicate that all three demand conditions have an influence opposite to those predicted, while the effects of supply conditions are all in the direction hypothesized. However, note that these results represent only the "direct effects" from simple, two construct relationships (i.e., ceteris paribus assumption).

When all three demand variables are assessed simultaneously, the direction of influence on store performance for both demand potential and demand growth are positive but neither path coefficient is statistically significant. However, both the negative influence and the (statistical) significance of the quality of demand variable remain unchanged.

The strong inverse relationship between demand quality and store performance, especially for the sample stores, is not surprising. As it was briefly noted in Chapter 5, the target group of consumers for the typical focus store are low income, convenience oriented households. Hence, as the correlations among the indicators of these two concepts indicate (see Appendix-A), quality of market demand is a factor, quite opposite to the one represented by target market reach [the interfactor correlation = -.825].

However, although the preceding interpretation is clearly context specific, the results from empirical analyses also have implications for all retail stores. More specifically, when considered collectively, the findings of this study generally imply that, at the level of individual trading areas, the "aggregate" market demand conditions may have no neccessary relationship to store performance. As it is illustrated in the "network" of relationships for both metropolitan and nonmetropolitan markets (see, Exhibits 81 and 82), none of the individual demand conditions has a significant path coefficient.[174] This conclusion, however, does not preclude the possibility of various indirect relationships.[175]

---

[174] In order to simplify the presentation, some of the "insignificant" links are not shown on these path diagrams.

[175] This conclusion, however, does suggest that the "empirical" associations reported between high demand

The direct relationships between market supply conditions and store performance are generally more consistent with the expectations. Here, relative overstoring appears to have a negative but insignificant impact on store performance. However, note that although the "sign" of the estimate in Exhibit 83 is consistent with the prediction, the magnitude of this path coefficient, [-.001], indicates nearly complete independence (see Exhibit 45 in Chapter 6). Nevertheless, in more complex relationships, and in both metropolitan and nonmetropolitan markets, overstoring appears to be an "important depressive element" on store performance. In general, this negative influence is more pronounced in metropolitan markets [-.187] than it is in nonmetropolitan markets [-.127] (see Exhibits 81-82).

As for the direct relationship between relative competitive intensity and store performance, there appears to be a fairly consistent pattern of inverse association across all markets. In the two construct relationship, the path coefficient among these two concepts is negative and statistically significant. Generally, the data also fits the model relationship well. However, note that when all other variables are brought into the analysis (see, Exhibits

---

conditions and high "labor productivity" in the studies of SMSA markets are probably an artifact of the aggregated statistics used in empirical analyses (e.g., Ingene 1982,1983c, Ingene and Lusch 1982).

80-82), relative influence of competitive intensity diminishes. In general, the direct influence of competitive intensity appears to be more pronounced in metropolitan markets than it is in nonmetropolitan areas. In the latter case, however, the path coefficient is not statistically significant.

On the basis of these findings, an assessment of the auxiliary hypothesis (H-3A) can also be made. In this subhypothesis, it was conjectured that

1. if there is a direct and positive relationship between demand and supply conditions (i.e., H-1 holds), and
2. if there is an inverse association between supply conditions and store performance (i.e., H-4 holds), and finally,
3. if the latter effect was found to be greater than the former,

then a negative association would be expected among elements of market demand and store performance. As the results of the previous analyses indicate, however, this conjecture is not supported for all demand elements. Although both the first and second conditions are partially corroborated by the empirical analyses, the last condition does not hold in either the overall sample of stores or in any of the two subsamples.

Reflecting on the first two sets of hypotheses, the results from the empirical, statistical analyses are

generally not very conclusive. This is partially due to the inability of the measuring instruments used in this study to "discriminate" among the various demand constructs. Therefore, it is not surprising that the problems of interpretation in the preceding analyses frequently involve various demand variables.[176]

A related difficulty in the interpretation of these results can also be attributed to the multiple operationalizations of the various demand constructs. Clearly, the latent demand variables considered in this study are fairly aggregated, multifaceted notions. Hence, as it was illustrated by "demand potential," the empirical centent of these concepts are relatively more prone to alternative interpretations. In this regard, the use of multiple indicators exasperates the situation since through multiple measures, the likelihood of "tapping" into different facets or dimensions of these constructs is greatly increased. This situation, in turn, makes it difficult to interpret the primary structural relations since these concepts no longer represent unidimensional constructs.

---

[176] Also note that the overall goodness of fit of the proposed models are almost always "poorer" when there is more than one demand element in the LISREL analyses.

An Evaluation Of Research Results-- H-5 And H-6.

It will be recalled that the major "rationale" behind the proposed relationships in H-5 and H-6 was to "explicate" some of the implicit assumptions of the behavioral paradigm (see Chapter 4). According to this paradigm, the positive influence of "market conditions" on store performance was predicated upon various "mediating" conditions such as the "ability of the stores in growth areas to attract the best managers" (H-6), and/or the "competitive conditions bringing about greater discipline in the management and operation of the retail stores," (H-5).

The results of the empirical analysis for H-5 indicate that none of these relationships are in the direction suggested by the behavioral paradigm. In other words, the findings of this study generally indicate that neither overstoring nor competitive intensity have a positive influence on either the marketing effectiveness of the stores or the effectiveness of the store manager(s). Furthermore, of the four subhypotheses, only the relationship between competitive intensity and marketing effectiveness is (statistically) significant.[177]

---

[177] Also note that for H-5, the proposed relationships for all the subhypotheses, as well as the overall hypotheses, fit the data very well (see Exhibit 51 in Chapter 6).

As to the relationships between market demand conditions (potential and growth of demand) and managerial effectiveness, the results of the empirical analyses indicate that neither path coefficient is statistically significant. Furthermore, the magnitude of the structural parameter estimates for both subhypotheses suggest that neither demand potential [.003], nor growth of demand [-.046] have any relationship to managerial effectiveness. The results from a similar analysis, involving the same demand conditions and a related behavioral element, "managerial expertness," essentially give the same conclusions (these findings are not reported in this study).

In summary, on the basis of the empirical results of this study, the conjectures of the behavioral paradigm can not be supported.

An Evaluation Of Research Results-- H-7,8,9 and 10.

In the third group of research hypotheses, various elements of unit conduct are interrelated in four structural models of increasing complexity.

In H-7, managerial effectiveness is posited to be a direct and positive function of the expertness of management. This conjecture is substantially corroborated in the empirical analyses. However, a similar two construct relationship between managerial and marketing effectiveness (H-8), although in the direction hypothesized, is not statistically significant.

In more complex models, the relationship of H-7 is fairly uniform in both metropolitan and nonmetropolitan markets, indicating that experience or expertness of store manager(s) has a strong positive influence on the effectiveness of store management. However, the parameter estimates for the managerial-marketing effectiveness link are generally very close to zero, indicating that these two factors are nearly independent (see Exhibits 80-82).

The influence of relative unit size on both the marketing and managerial effectiveness is significant in all empirical analyses. In general, it appears that the more a store is "undersized" in relation to major competition, the greater the loss in relative market position and the lower the effectiveness of managerial effort. However, the results from both the simple and complex relationships indicate that the former effect is much stronger than the latter. The analyses of the two subsamples further suggest that the "relative influence" of size differential on marketing effectiveness is far more important in nonmetropolitan markets [-.681] than it is in metropolitan markets [-.377].

Finally, in H-10, the target market reach of a retail unit is first related to an element of market supply (competitive intensity), and then to two elements of unit conduct. Of the three subhypotheses, only the relationship

between target market reach and managerial effectiveness is in the direction predicted (positive) and statistically significant. However, when all of the subhypotheses are considered simultaneously, the link between target market reach and marketing effectiveness is also significant. But the direction of influence (negative) is opposite to the one predicted.

The latter relationship is quite unexpected, since it implies that retail units which are located in markets with favorable "demographics" have a worse competitive position relative to the competition. A possible reason for this result may lie in the operationalizations of the two concepts.

It will be recalled that for the target market reach construct, the patterns of correlations in the measurement triangles indicated that convergence in measurement could not be obtained. Hence, in the empirical analyses, two of the three indicators were deleted from the statistical analyses. Similarly, one of the four indicators of marketing effectiveness, representing the relative quality of store location, was also deleted from analyses. Thus, it is clear that neither concept has strong measurement properties.

However, it is interesting to note that in the "original set of seven indicators," one of the measures of

target market reach, (INC14M), has a consistent pattern of "positive" cross correlations, while the same correlations for the other two indicators are negative (see Exhibit 68). This situation is generally indicative of a violation in either the assumption of (construct) unidimensionality or the rule of causal correspondence (between the latent and manifest variables). In other words, if all three indicators are indeed "reflective" of target market reach, then the unidimensionality assumption is clearly not met; if, on the other hand, the concept is believed to be unidimensional, then clearly, these measures are not "reflective" of target market reach but possibly are "formative or cause" indicators of the same. In either case, these conditions are in violation of standard LISREL assumptions and/or the model relationships are misspecified. For these reasons, it is difficult to evaluate the "substantive" meaning of the relationship between target market reach and marketing effectiveness, despite the "statistical" significance of the path coefficient.[178]

---

[178] Here, one may also conjecture that the "negative relationship" between target market reach and marketing effectiveness may be reflective of the "theory in use" in the management of retail enterprises. More specifically, for those stores which are "already" located in markets with favorable demographics (to the focal unit), it may be that the "marketing effort" is "reduced and/or reallocated to other uses" in developing and facilitating exchanges. This post hoc hypothesis is worthy of further examination in future research.

An Evaluation Of Research Results-- H-11.

In the final set of research hypotheses, the direct relationships between the elements of unit conduct are individually and collectively related to store performance. In general, the results of the empirical analyses from all three samples indicate that these links are in the direction predicted, and with few exceptions, statistically significant.[179] However, it should be noted that the "relative influence" of these factors on store performance are not uniform across metropolitan and nonmetropolitan markets.

Target market reach, for example, is a more important factor in nonmetropolitan markets, while the relative size of unit is similarly more important in metropolitan markets. On the other hand, although both managerial effectiveness and expertness have similar influences on store performance, it appears that these factors "count" more in metropolitan markets. Furthermore, for stores located in metropolitan markets, marketing effectiveness seems to have no significant impact on store performance.

---

[179] Here, the two exceptions are the insignificant links between the relative store size and performance in the complex models for both the overall sample and nonmetropolitan market subsample; and the link between marketing effectiveness and performance in nonmetropolitan markets.

An Overall Evaluation Of Empirical Analyses

Reflecting on the analyses and interpretation of the findings from the empirical analyses, it is important to note and reemphasize several points.

First, as it was noted at the begining of the statistical analyses in Chapter 6, in this research no attempt was made to obtain "better" fitting models. For example, throughout the statistical applications, correlated errors were not allowed despite the favorable diagnostics from LISREL analyses. Similarly, with few exceptions, every attempt was made to use "all" the possible indicators of a given concept. The former strategy was used in order to avoid further interpretational confounding that would have been introduced by the post hoc systemic factors. The latter strategy, on the other hand, was employed in order to avoid selection biases.[180]

Second, up to this point no mention was made of the "identification" status of the model specifications. Hence, here it is appropriate to note that, in all of the LISREL applications, the diagnostics from the analyses did not signal a problem with respect to the identifiability of any of the parameters. In general, all the correlation and covariances were well behaved and there was no

---

[180] In this regard, the preceding discussion on target market reach is illustrative of some of the potential problems.

ill-conditioning in these matrices. For all models, the identification status of the LISREL specification was checked using the following algorithm suggested by Joreskog and Sorbom (1983): after choosing a set of reasonable values for the free parameters, [Σ] was computed. Then the program was rerun with this [Σ] as the "input matrix," and all the free parameters in the original model were reestimated. According to the authors,

> If this results in the same estimated values as those used to generate , then it is most likely that the model is identified. Otherwise, those parameters which gave a different value [in the second run] are probably not identified (p, I.24).

In all the LISREL analyses, application of the preceding algorithm did not give an indication of an unidentified parameter.

Third, as it was noted in Chapter 6 and in the preceding discussion, the measurement properties of the constructs used in this research were mixed at best. Of the eleven unobservables, two were assumed to be measured perfectly by a single indicator (i.e., overstoring and relative size), another two were "forced" to have single indicators on the basis of post hoc analyses (i.e., target market reach and managerial expertness). These assumptions, of course, are rather difficult to justify. Hence, some of the findings from the empirical analyses should be seen as only "tentative" conclusions, subject to empirical

verification in other contexts with hopefully "better" measurements.

Fourth, it should be noted that all of the "causal inferences" in this research were based only on logical criteria and not on the statistical results. Hence, for example, when demand character was hypothesized and/or evaluated to have a "direct influence" on overstoring, the inference was based on the logical inconsistency (and hence elimination) of the alternative "explanation" that some measure of store space "produces" incomes or wealth in the trading area.

Finally, it should be emphasized that both the conceptual development and the empirical analyses of this study were restricted to a very limited set of market conditions and behavioral elements. Although these factors are fairly representative of some the factors which may impact retail store performance, they certainly are not exhaustive of all the possible factors. The intent here has been to provide a "skeleton" of the type of factors and relationships that can be entertained in future research.

Implications Of Research For The Management Of Retail Enterprises

Although the empirical, statistical analyses of the preceding section provide important insights into some of the factors that influence retail store performance, these theoretical findings are not any more "directional" in practical terms than those reported by the previous research. Furthermore, the "substantive" conclusions drawn on the basis of statistical significance does not neccessarily imply "practical significance." It is also conceivable that, in some cases, statistical insignificance may have significant practical import.

Probably the most effective way to communicate the managerial implications of this study is to "recast" some of the previous findings in a number of policy matrices.[181] In the following series of Exhibits, a limited sample of these matrices are presented and their implications for the management of retail enterprises are discussed.

It will be recalled that both overstoring[182] and relative size of unit[183] were found to have an inverse

[181] A policy matrix is essentially a two-way contingency table (or a cross-tabulation), where the two axes represent the independent factors, while the cell entries correspond to a "dependent" variable.

[182] Overstoring is measured by SPCPHH, i.e., total retail space per household.

[183] Relative size of unit is measured by CSTCS, i.e., gross leasable space of top competitor to total ratail space of focal unit.

relationship to store performance. The results from structural equations, however, indicated that overstoring was not a (statistically) significant factor. The relative influence of these factors on store performance is summarized in a policy matrix in Exhibit 84.[184]

Note that both overstoring and relative size of unit have an important depressive effect on the ROI and profitability of the retail units.[185] In markets where there is a "low" level of overstoring, both ROI and profitability moderately "declines" as the unit is progressively more undersized. However, in markets where there is a "high" degree of overstoring, the relative size of unit becomes a "significantly more important" factor. Note that compared to the best scenario (i.e., the low-low cell), the worst scenario (i.e., the high-high cell) results in dramatically lower level of ROI (41.3% vs 25.1%) and profitability performance (6.5% vs 2.6%).

Clearly, however, relative size of store is the more dominant of the two factors. Note that at all levels of overstoring, as the relative size of of competition gets

---

[184] In this and other exhibits, the "subdivisions" of the factors were determined by examining the frequency distributions of the relevant manifest variables in order to obtain approximately equal cell sizes.

[185] ROI is defined as net profit before taxes and (corporate) overhead divided by the sum of average inventory investment and replacement value of store fixtures. Profitability is defined as the net profit before taxes expressed as a percent of net sales.

larger, both the ROI and profitability of the stores significantly declines. This is especially evident in moderately to highly overstored areas where the "penalty" for lower capacity potential is a reduction in the ROI performance of nearly 50 percent, and for profitability performance, a decline of close to 65 percent.

Exhibit 85 summarizes the results of a similar analysis where target market reach[186] and relative store size are the two independent variables. In the structural relations, it will be recalled that target market reach as a strategic locational element was found to have an important positive influence on store performance. The figures in the policy matrices of Exhibit 85 substantially corroborate this finding.

Note that, regardless of the relative size of the unit in the marketplace, the higher levels of target market reach invariably leads to higher levels of ROI and profitability performance. In the best of all possible worlds, (i.e., high target market reach and low relative size of competition), the average ROI for the sample stores is 60.2 percent. Compared to the worst case scenario, (i.e., high relative size of competition and low target market reach), this figure is approximately three times as large for ROI [20.7%], and nearly four times as large for

[186] Target market reach is measured by MINORS, i.e., the percentage of "minorities" in the trading area.

profitability performance [8.7% vs 1.8%, respectively].

However, it should be noted that despite the "gains" from reaching the intended demand base, relative size of unit in the marketplace is still an important "depressive" factor on store profitability and ROI. As both policy matrices clearly indicate, irrespective of the level of target market reach, both the ROI and profitability of the stores decline as the unit is progressively undersized. This negative influence is especially traumatic for those stores with moderate to low target market reach (cf., the first and third "rows" in Exhibit 85).

In Exhibits 86 and 87, the relative influence of target market reach on store performance is assessed in the context of two supply conditions.

The figures in Exhibit 86 generally suggest that when there is a close match between the actual and target demand base in the marketplace, the level of overstoring is no longer a major negative influence on store performance. More specifically, these policy matrices indicate that at any level of overstoring, the closer the fit between the actual and target demand base, the higher the ROI and profitability performance. However, at moderate to high levels of target market reach, progressively higher overstoring does not significantly alter either the ROI or profitability of the retail units.

EXHIBIT 84

Profitability And ROI Impact Of Relative Size And Overstoring

Overstoring	Relative Size Of Competition: Low	Moderate	High
Low	41.3*	41.4	34.3
Moderate	49.6	34.1	34.2
High	50.0	31.3	25.1

Overstoring	Relative Size Of Competition: Low	Moderate	High
Low	6.5**	5.5	4.8
Moderate	8.8	5.3	4.1
High	7.5	4.0	2.6

* Return On Controllable Assets (%)
** Net Profit Before Taxes (%)

EXHIBIT 85

Profitability And ROI Impact Of Relative Size And Target Market Reach

Relative Size Of Competition	Target Market Reach: Low	Moderate	High
Low	38.5*	49.0	60.2
Moderate	24.4	45.2	44.7
High	20.7	28.8	50.6

Relative Size Of Competition	Target Market Reach: Low	Moderate	High
Low	6.6**	7.9	8.7
Moderate	2.4	7.2	6.8
High	1.8	3.2	7.8

* Return On Controllable Assets (%)
** Net Profit Before Taxes (%)

The relative presence of intercept competitors in the marketplace,[187] on the other hand, has an important negative influence on store performance (see Exhibit 87). It will be recalled that intercept competitors (e.g., discount retailers, super drug or combination stores) with their large size, operating economies, and broad assortments are a dislocative force in most retail markets. The results of the two way analyses suggest that in those markets where there is a strong presence of such retailers, the ROI for the focal units is lower approximately 10 to 12 percentage points, regardless of the relative target market reach. Similar conclusions also hold when profitability performance of the stores is considered. However, in the latter case, it appears that high target reach does have an alleviating (positive) influence (cf., the first and last "rows" in the second policy matrix of Exhibit 87).

The two factors which appear to have an important "negative" influence on store performance are combined in the two policy matrices of Exhibit 88. Although the preceding analyses indicate that both the presence of intercept competitors and the relative size of unit are strongly depressive of store performance, one may be curious to know which one of the two is the more "evil" factor.

---

[187] Presence of intercept competitors is measured by INTCP2, i.e., the percentage of retail space accounted by these competitors (see Chapter 5).

EXHIBIT 86

Profitability And ROI Impact Of Overstoring And Target Market Reach

Overstoring	Target Market Reach: Low	Moderate	High
Low	27.6*	43.1	47.6
Moderate	28.3	44.4	53.9
High	26.0	40.9	45.9

Overstoring	Target Market Reach: Low	Moderate	High
Low	3.5**	5.9	7.3
Moderate	4.1	7.5	8.5
High	2.9	6.0	7.0

* Return On Controllable Assets (%)
** Net Profit Before Taxes (%)

EXHIBIT 87

Profitability And ROI Impact Of Target Market Reach and Intercept Competition

Relative Presence Of Intercept Competitors

Target Market Reach	Low	Moderate	High
Low	32.3*	29.1	24.3
Moderate	49.0	39.2	40.0
High	60.7	40.4	48.0

Relative Presence Of Intercept Competitors

Target Market Reach	Low	Moderate	High
Low	4.8**	3.9	2.6
Moderate	7.1	6.3	5.4
High	8.1	6.7	7.9

* Return On Controllable Assets (%)
** Net Profit Before Taxes (%)

The figures in the policy matrices of Exhibit 88 suggest that relative size of the unit (in relation to top competition) is clearly the more dominant negative influence on store performance. Compared to the ROI for the most "favorable" situation (i.e., 52.1% in the low-low cell), the most undersized retail units have an ROI performance of 25.7 percent, whereas the concentration of intercept competitors results in an ROI of 37.2 percent. The figures for profitability performance give essentially the same conclusions.

In the structural relations, the "qualities" of marketing and managerial effort[188] were found to be two independent factors. However, the results of the empirical analyses also indicated that these two factors have significant "direct" effects on store performance. In Exhibit 89, the ROI and profitability impact of these two factors are summarized in the two policy matrices.

Note that in the worst case scenario (i.e., low levels of both managerial and marketing effectiveness), the retail stores average an ROI of 13.7 percent and a negative level of profitability performance [-1.1%]. However, as the figures of both policy matrices indicate, stores with progressively "more able" managers "turn-in" increasingly

---

[188] These two variables are measured by the summated scores of the items that make up their indicators (see Chapter 5).

EXHIBIT 88

Profitability And ROI Impact Of Relative Size And Intercept Competition

Presence Of Intercept Competitors	Relative Size Of Competition: Low	Moderate	High
Low	52.1*	41.4	25.7
Moderate	36.0	35.0	30.0
High	37.2	32.3	24.0

Presence Of Intercept Competitors	Relative Size Of Competition: Low	Moderate	High
Low	8.3**	6.3	2.1
Moderate	6.1	4.1	3.7
High	5.7	4.6	2.0

* Return On Controllable Assets (%)
** Net Profit Before Taxes (%)

higher levels of ROI (44.9%) and profitability (7.5%).

The effect of higher marketing effectiveness, on the other hand, is generally less dramatic. Note that, when managerial effectiveness is low, stores with the best relative overall position in the marketplace (compared to top competition), produce an ROI of only 23.6 percent and a profitability of 2.9 percent.

The figures of Exhibit 89 generally reinforce the conclusions from the earlier statistical analyses (i.e., managerial effectiveness is the "more" important of the two factors). However, these figures also suggest that the "combined" influence of the two factors have a significant impact on store performance which is not immediately apparent from the structural relations.

The profit payoff from another dimension of the quality of management, the expertness of store manager,[189] is summarized in Exhibit 90. As the figures of the two policy matrices indicate, the combination of experience and abilities produces the best ROI and profitability performance. However, if one had to choose between experience and abilities alone, the results of the two way analyses suggest that "experience," other things being equal, is probably a safer "bet" for higher retail store performance.

---

[189] Managerial expertness is measured by MGRRTL, i.e., store manager's total years of retailing experience.

EXHIBIT 89

Profitability And ROI Impact Of Marketing And Managerial Effectiveness

Marketing Effectiveness	Managerial Effectiveness: Low	Moderate	High
Low	13.7*	29.3	44.9
Moderate	25.1	40.4	60.5
High	23.6	52.5	60.9

Marketing Effectiveness	Managerial Effectiveness: Low	Moderate	High
Low	-1.1**	4.1	7.5
Moderate	2.4	6.3	9.2
High	2.9	9.9	9.8

* Return On Controllable Assets (%)
** Net Profit Before Taxes (%)

EXHIBIT 90

Profitability And ROI Impact Of Managerial Effectiveness And Expertness

Managerial Expertness	Managerial Effectiveness: Low	Moderate	High
Low	18.2*	23.2	27.2
Moderate	35.4	41.6	40.2
High	47.8	54.3	63.3

Managerial Expertness	Managerial Effectiveness: Low	Moderate	High
Low	0.6**	1.7	3.5
Moderate	5.3	7.3	6.5
High	8.3	7.9	10.0

* Return On Controllable Assets (%)
** Net Profit Before Taxes (%)

Exhibit 91 summarizes the impact of target market reach and marketing effectiveness on store performance. It will be recalled that the results of the statistical analyses, contrary to a priori expectations, indicated that target market reach had a "negative" influence on marketing effectiveness. Hence, the structural relations were indicative of an "indirect" negative link between target market reach and store performance.

However, note that in all markets, irrespective of the level of target group reach, both the ROI and profitability of the stores are higher, the higher the relative effectiveness of marketing effort. Similar conclusions also hold for the target market reach when the marketing effectiveness of the unit is held constant. More importantly, however, also note that progressively "higher" levels of ROI and profitability performance consistently result from the "combined" effects of these two factors (cf., the ROI and profitability percentages in the diagonal cells). Hence, although target market reach may have a depressing "indirect" effect on store performance, the "net effect" of these two factors are substantially in the direction expected in the research hypotheses.

Finally, the profit payouts from "better" marketing effort in the more competitive markets are illustrated in the two policy matrices of Exhibit 92. Here, note that when

EXHIBIT 91

Profitability And ROI Impact Of Target Market Reach And Marketing Effectiveness

Target Market Reach

Marketing Effectiveness	Low	Moderate	High
Low	18.1*	28.3	42.6
Moderate	28.6	46.5	54.2
High	39.3	51.2	57.6

Target Market Reach

Marketing Effectiveness	Low	Moderate	High
Low	0.6**	4.3	6.7
Moderate	3.8	6.6	7.8
High	6.9	8.5	9.1

* Return On Controllable Assets (%)
** Net Profit Before Taxes (%)

the relative "competitive" position of the unit is low (i.e., the first "rows" in the policy matrices), the degree of competitive intensity does not appear to have an effect on either the ROI or profitability performance. In other words, when the effectiveness of marketing effort is already below average, the level of performance is basically so low that it does not seem to "change" with the "increasing" presence of intercept competitors.

However, as the effectiveness of marketing effort is "increased," the performance of the units dramatically "rises." Also note that when the marketing effectiveness is high, this time the relative presence of intercept competitors (i.e., competitive intensity) does not appear to have any effect on store performance. Hence, although competitive intensity in the marketplace has an important "depressive" influence on store performance, this negative force can substantially be counteracted by the marketing effectiveness of the retail unit.

In summary, it is important to reemphasize that these are but a very limited "sample" of some of the managerial implications that may be drawn from the empirical analyses. Obviously, the policy matrices discussed above can be combined and/or expanded to include other factors for optimal managerial use and decision making. Therefore, these findings should be considered as only tentative,

EXHIBIT 92

Profitability And ROI Impact Of Intercept Competition And Marketing Effectiveness

Relative Presence Of Intercept Competitors

Marketing Effectiveness	Low	Moderate	High
Low	22.7*	26.2	22.4
Moderate	50.5	39.1	34.6
High	49.4	43.0	40.1

Relative Presence Of Intercept Competitors

Marketing Effectiveness	Low	Moderate	High
Low	2.7**	2.8	2.9
Moderate	7.0	5.6	4.9
High	8.2	8.2	8.1

* Return On Controllable Assets (%)
** Net Profit Before Taxes (%)

instrumental conclusions, subject to further analyses, testing, and empirical study.

Some Further Thoughts And Reflections On The Research

In the Introduction to this research, the overall objective of the study was summarized under two headings. Specifically, it was hoped that, in trying to explain and understand retail store performance, this study would

1. contribute to the existing thought, theory and methodology in the marketing discipline, and further,
2. provide a frame of reference for the retail executive and manager which can be used to more effectively manage retail establishments.

In this final section, it is appropriate that a "self" evaluation and an assessment of these objectives are made.

Contributions To Theory

The contribution of this effort to the existing thought and theory in the marketing discipline lies in the proposal and development of an explicit research paradigm and a model for the explanation of retail store performance. In all the previous studies of retailing performance, few researchers have proposed theoretical models, and even fewer have tested their conjectures.

Most of the investigations reviewed in Chapter 3 were studies that were based on readily available, secondary data sources, frequently with no clear conceptualization of the constituent elements. Still others were predictive, forecasting models which, by design, had no a priori hypotheses, and simply reported the results of "good fitting" empirical models. In all of these studies, the scope of research was also limited to fairly narrow, limited aspects of retail markets and/or unit behavior.

In sharp contrast to these earlier investigations, the model outlined in this thesis presents a skeleton for a general theory for the explanation of retail store performance. In this study, probably for the first time in retailing performance research, a number of theoretical and derived notions are proposed, defined, and interrelated in a network of structural relations. In this regard, the conceptualizations of this study provide a general frame of reference which other researchers can build and expand upon in the future.

The paradigm of research which has importantly guided this study combines the elements from the economic theory of the firm with those from the more behavioral models of the enterprise. In the previous marketing and retailing literature, these two models have been relatively isolated, and hence, the research streams have been severely

disjointed. In this regard, the model proposed in this thesis is also illustrative of some of the "ways and means" through which various research programmes in, for example, retail patronage, retail structure, retail image, and retailing performance studies can be brought together in one general theoretical network. In this sense, this study is also a modest attempt at suggesting a viable avenue for a general theory of retailing.

Contributions To Research Methodology

The primary contribution of this investigation to research methodology lies in its introduction of a structural equations methodology to the retailing performance literature.

To date, retailing researchers have neither proposed nor tested theoretical models which hypothesize relationships between theoretical and derived concepts (i.e., nonobservational research hypotheses). But more importantly, in none of the previous studies have the researchers accounted for the measurement errors in their operationalizations of these concepts.[190]

---

[190] Rather, the past practice has been to hypothesize relationships among ill or undefined concepts, and then to empirically test these relationships based solely on single operationalizations.

As it was noted in Chapters 4 and 5, there is an important distinction between the "theoretical" definitions of the concepts and their empirical referents. When this distinction is ignored, an investigator must necessarily assume perfect measurements (reliability) and perfect correspondence between a concept and its indicators (validity). These are not only untenable assumptions in all areas of social science research, but more importantly, such assumptions have important bearings on the estimated regression and path coefficients. Hence, without a consideration of the measurement properties, the (statistical) results from most empirical analyses are necessarily biased, inefficient, and/or unstable. This strict adherence to the defunct operationalist mode of thinking (or conducting research) in retailing has undoubtedly contributed to the current characterization of researchers in this field as "scientific laggards," and their research as "backward."

The structural equation methodology used in this research provides a means for representing theoretical constructs, theoretical relationships, and the correspondence procedures among the theoretical concepts and empirical measures in a single structure. Hence, the measurement properties of the hypothesized model can be tested simultaneously with the structural relationships.

Thus, with this procedure, it is possible to discover and/or confirm relatively unmixed, invariant effects of one variable on another. This is in sharp contrast to the simple empirical association given by the correlation coefficient or, the conditional mean of a dependent variable as a function of a set of "explanatory" variables, given by the regression analysis.

The rigor afforded by the structural equations methodology, however, does not come without its costs and difficulties. First, the technique requires a reasonable facility in psychometric theory and econometric methods as well as a good working knowledge in multivariate statistics. For a more informed use of the technique, it is useful that one also have some background in what are generally considered to be fairly esoteric discussions on the role of causality, the rules of correspondence, and the philosophy of science in general. Few researchers, and certainly not this writer, can claim to have equal facility in all of these areas.

Second, it is rather easy to make "mistakes" in the specification of the structural relationships. This may partly be a result of the relative "scarcity" of conceptual and/or theoretical knowledge in the field, and partly be due to the "complexity" of the model(s) entertained. Whatever the case may be, it is important to note that in none of the

solution algorithms (e.g., LISREL) are there clear cut "statistics" which tell the user what or where the "mistakes" are, or how to correct them. It is for this reason that it is "widely" encouraged that there be a fairly good theory, or at least, some conceptual basis for the hypothesized relationships. Otherwise, as it was noted in Chapter 6, it is almost always possible to find a subset of measures or structural relations which will fit the data without any substantive meaning.

Third, as with any emerging statistical technique, there are a number of unsettling ambiguities as to what certain (statistical) quantities mean, how they are to be interpreted, and what conclusions could be drawn from them. There are a number of rules of thumb, many of which are still debated and discussed in the literature. Hence, the structural equations methodology is a "dynamic" statistical tool which requires constant review of the current literature and learning while doing.

Fourth, structural equations modeling requires fairly costly data collection and processing methods. In order to tap the full potential and power of the statistical methodology, several indicators of the each theoretical notion need to be obtained. In many cases this may not be feasible in actual research settings. Furthermore, for fairly large models (e.g., 10-12 constructs, each measured

with 2-3 indicators) and/or in the case of poorly operationalized or ill-defined models, the computer time may be a real constraint.[191]

Finally, and probably the most important value (and difficult part) in using structural equations methodology lies in the stringent requirements imposed on the researcher to fully explicate the assumptions typically made in empirical research. In most other statistical analysis methods, the researcher can probably "get by" with a minimum of the requirements for any one technique. With structural equations methodology, however, these assumptions become an integral part of the hypothesized network of relationships.

As it was noted in previous chapters, for example, the measurement properties of the theoretical concepts in a structural model are a set of "auxiliary hypotheses." Similarly, every error term "specified" and/or any parameter that is "not specified" in a model, in effect, represents an assumption to be evaluated in the statistical relations.

For models such as the multiple construct relationships of Exhibit 22, this is indeed an arduous, if not an impossible task. But as Blalock (1964) eloquently noted two decades ago

---

[191] The data processing for this research was done on an IBM 3081 Model D computer, using remote job entry from IBM 3278 or its equivalent terminals. For the more complex models, CPU time for LISREL applications was typically 1 to 5 minutes.

> a failure to state one's assumptions explicitly does not make them disappear in some magical way. It does, however, make it much more difficult to evaluate and reject a given theoretical system. Theoretical inadequacies are harder to spot, and untestable theories remain to clutter up the literature. Such a state of affairs is hardly desirable (p.171).

In summary, although no claim can be made as to its error-free application, the attempt at utilizing this powerful technique in this study is a significant contribution to the methodology of research in retailing discipline.

Contributions To Practice

Some of the more specific managerial implications of the empirical, statistical analyses of this investigation are already noted in the preceding sections and need not be repeated here. At a more general level, the contribution of this study to the practice of retailing lies not so much in these extant "findings" but probably in the "overall methodology" of the research.

As it was noted earlier, the previous investigations of retailing performance have been "soft" on adequate conceptualizations, and hence, weak in their practical implications. Furthermore, these studies have utilized a set of statistical tools which also have significant

shortcomings. The combination of these two factors produce a state of affairs which is highly undesirable from both a theoretical and a practical point of view. Clearly, the limitations of statistical analyses may "bias" not only the extant research findings, but also the substantive, practical implications or inferences that may be drawn from them.

The holistic construal that was introduced in this investigation has the potential for not only the testing of substantive research hypotheses, but also for the "exploration" of the nature of retailing phenomena in a way that was not possible a few years ago. In this regard, it is important to note that there is nothing in the "nature" of structural equations methodology that would preclude its use as a forecasting or exploratory tool. The added benefit here is a more rigorous and "realistic" way of looking at the "interdependencies" among the various factors, which standard applications of single stage, OLS regression analyses are not designed and/or capable to do.

In summary, the more rigorous empirical analyses, and the potential benefits from them, are not exclusive to the domain of scientific research but can be profitably used in more practical applications as well. In this regard, it is hoped that this investigation provides not only a "theoretical framework" for future research, but also a

"practical framework" for the retail analysts and executives in programming their operations.

Summary and Conclusions

Clearly, the conceptual and empirical research reported in this study is but only a modest "beginning" to understanding and "explanation" of retail store performance. As It was noted at the start of this investigation, "there is much more theorizing that needs to be done, and many aspects of retailing process remain to be explored and understood."

In the short-run, and for ultimate theoretical elegance and managerial relevance, we must bring together the retail patronage research and the retailing performance research. Both of these research programmes, in themselves, lack a disturbing closure. Retailing performance research, without a consideration of the factors due to the primary agents to the "exchange," is deficient in a major way. So is retail patronage research, where the economic "outcomes" of the "exchange" are frequently ignored. The complementarities of these two research programmes should not be ignored in future research.

As for the long-run, we should be constantly searching for alternative, newer and bolder perspectives in looking at the retailing phenomena. This study was based on

"a" world view popularly known as the Structure-Conduct-Performance paradigm. This paradigm, as with all paradigms, has its shortcomings. It is the "belief" of this writer that we may obtain a richer description and mapping of retailing phenomena through a game theoretic, "response-response" paradigm. This approach is infinitely more complex than the one adopted in this study and yet is much more realistic.

If the metaimplications of this research as well as the "realities" of the marketplace are any guidance, the structure of the retail markets change, various institutional forms evolve or die, differential retail patronage occurs, and the performance of retail units results, ultimately, from the individual and collective "responses" of retail units to the actions or decisions of other units and to various market forces. And if "history" is any guidance, we should not be able to ever "capture" retailing at rest, but only in snapshots through time.

Collectively, then, these are the challanges facing us in the future.

REFERENCES

Aaker, David A. and Richard P. Bagozzi (1979), "Unobservable Variables in Structural Equation Models with an Application in Industrial Selling," Journal of Marketing Research, 16 (May), 147-158.

Aaker, David A., et al (1980), "On Using Response Latency to Measure Preference," Journal of Marketing Research, 17, 237-244.

Abell, Derek J. (1980), Defining The Business--The Strategy Point of Strategic Planning, Englewood Cliffs: Prentice Hall.

Acito, Franklin and Ronald D. Anderson (1984), "On Simulation Methods for Investigating Structural Modeling," Journal of Marketing Research, 21 (February), 107-112.

Alderson, Wroe (1948), "A Formula For Measuring Productivity in Distribution," Journal of Marketing, 12, (April), 442-448.

Alderson, Wroe (1950), "Survival and Adjustment in Organized Behavior Systems," in Theory in Marketing, R. Cox and W. Alderson (Eds.), Chicago: Richard D. Irwin, Inc., 65-87.

Alderson, Wroe (1965), Dynamic Marketing Behavior-A Functionalist Theory of Marketing, Homewood, Illinois: Richard D. Irwin, Inc.

Alderson, Wroe and Reavis Cox (1948), "Towards A Theory Of Marketing," Journal of Marketing, 13 (October), 137-152.

Alderson, Wroe and Stanley J. Shapiro (1964), "Towards a Theory of Retail Competition," in Theory in Marketing, R. Cox, W. Alderson and S. J. Shapiro (Eds.), Homewood. ILL: Richard D. Irwin, Inc., 190-212.

Alt, Richard M. (1949), "Competition Among Types of Retailers in Selling the Same Coomodity," Journal of Marketing, 14 (October), 441-447.

Alwin, D. F. and R. C. Tessler (1974), "Causal Models, Unobserved Variables, and Experimental Data," The American Journal of Sociology, 80, 58-86.

Anderson, Paul F. (1982), "Marketing, Strategic Planning and The Theory of the Firm," Journal of Marketing, 46 (Spring), 15-26.

Anderson, Ronald D., Jack Engledow and Helmut Becker (1979), "Evaluating the Relationships Among Attitude Toward Business, Product Satisfaction, Experience and Search Effort," Journal of Marketing Research, 16 (August), 394-400.

Applebaum, William (1951), "Studying Consumer Behavior in Retail Stores," Journal of Marketing, 15 (October), 172-178.

Applebaum, William (1965), "Store Performance in Relation to Location and Other Characteristics," Chain Store Age, (November), E14-E16.

Applebaum, William (1966), "Methods for Determining Store Trade Areas, Market Penetration and Potential Sales," Journal of Marketing Research, 3 (May), 127-141.

Arndt, Johan (1972), "Temporal Lags in Comparative Retailing," Journal of Marketing, 36 (October), 40-45.

Arndt, Johan (1977), "Exploring Relationships Between Market Structure and Performance in Retailing," in Strategy+Structure=Performance, The Strategic Planning Imperative Hans B. Thorelli (Ed.), Indiana University Press, 237-246.

Arndt, Johan (1983), "The Political Economy Paradigm: Foundations For Theory Building in Marketing," Journal of Marketing, 47 (Fall), 44-54.

Arndt, Johan and Leif Olsen (1975), "A Research Note on Economies of Sale in Retailing," Swedish Journal of Economics, 77, No:2, 207-221.

Arndt, Johan and Thorolf Helgesen (1981), "Marketing and Productivity: Conceptual and Measurement Issues," in 1981 American Marketing Association Educators' Conference Proceedings, 81-84.

Arnold, Stephen J., Tae H. Oum and Douglas J. Tigert (1983), "Determinant Attributes in Retail Patronage: Seasonal, Temporal, Regional and International Comparisons," Journal of Marketing Research, 20 (May), 149-157.

Asher, H. B. (1976), Causal Modeling, Sage University Paper Series on Quantitative Applications in the Social Sciences, Beverly Hills: Sage Publ.

Assael, Henry (1968), "The Political Role of Trade Associations in Distributive Conflict Resolution," Journal of Marketing, 32 (April), 21-28.

Bagozzi, Richard P. (1974), "Marketing as an Organized Behavioral System of Exchange," Journal of Marketing, 38 (October), 77-81.

Bagozzi, Richard P. (1975), "Marketing as Exchange," Journal of Marketing, 39 (October), 32-39.

Bagozzi, Richard P. (1976), Toward A General Theory For The Explanation of The Performance of Salespeople," Unpublished Ph.D Dissertation, Northwestern University.

Bagozzi, Richard P. (1977), "Structural Equation Models in Experimental Research," Journal of Marketing Research, 14 (May), 209-226.

Bagozzi, Richard P. (1978), "Reliability Assessment By Analysis of Covariance Structure," in 1978 American Marketing Association Educators' Conference Proceedings, 71-75.

Bagozzi, Richard P. (1979), "Towards a Formal Theory of Marketing Exchange," in Conceptual and Theoretical Development in Marketing, O. C. Ferrell et al (Eds.), Chicago: American Marketing Association, 431-447.

Bagozzi, Richard P. (1980a), "Performance and Satisfaction in an Industrial Sales Force: An Examination of Their Antecedents and Simultaneity," Journal of Marketing, 44, 65-77.

Bagozzi, Richard P. (1980b), Causal Models in Marketing, New York: John Wiley and Sons.

Bagozzi, Richard P. (1981), "Evaluating Structural Equation Models With Unobservable Variables and Measurement Error: A Comment," Journal of Marketing Research, 18 (August), 375-381.

Bagozzi, Richard P. (1982), "A Field Investigation of Causal Relations Among Cognitions, Affect, Intentions, and Behavior," Journal of Marketing Research, 19 (November), 562-584.

Bagozzi, Richard P. (1983), "Issues in the Application of Covariance Structure Analysis: A Further Comment," Journal of Consumer Research, 9 (March), 449-450.

Bagozzi, Richard P. (1984), "A Prospectus for Theory Construction in Marketing," Journal of Marketing, 48 (Winter), 11-29.

Bagozzi, Richard P., Claes Fornell and David Larcker (1981), "Canonical Correlation Analysis As A Special Case of Structural Relations Model," Multivariate Behavioral Research, 16, 437-454.

Bagozzi, Richard P. and Claes Fornell (1982), "Theoretical Concepts, Measurements, and Meaning," in A Second Generation of Multivariate Analysis, Vol.II: Measurement and Evaluation, N.Y.: Preager.

Bagozzi, Richard P. and Lynn Phillips (1982), "Representing and Testing Organizational Theories: A Holistic Construal," Administrative Science Quarterly, 27 (September), 459-489.

Bain, Joe S. (1968), Industrial Organization, 2nd Edition, N.Y: John Wiley and Sons, Inc.

Balderston, F.E. (1956), "Assortment Choice in Wholesale and Retail Marketing," Journal of Marketing, 21 (October), 175-183.

Banks, Seymour (1951), "Comments on Alderson's Index of Sorting Balance," Journal of Marketing, 15 (January), 331-335.

Barger, Harold (1955), Distribution's Place in the American Economy Since 1869, New York: National Bureau of Economic Research, Princeton University Press.

Bartels, Robert (1951), "Can Marketing Be a Science?" Journal of Marketing, 15 (January), 319-328.

Bartels, Robert (1974), "Identity Crisis in Marketing," Journal of Marketing, 38 (October), 73-76.

Bartels, Robert (1976), The History of Marketing Thought, 2nd Edition, Columbus, Ohio: Grid, Inc.

Bartels, Robert (1981), "Criteria for Theory in Retailing," in Theory in Retailing: Traditional and Nontraditional Sources, Ronald W. Stampfl and Elizabeth C. Hirschman, (Eds.), Chicago: American Marketing Association, 108-114.

Bass, Frank M. (1956), "Expense and Margin Functions in Drug Stores," Journal of Marketing, 20 (January), 236-24.

Bass, Frank M. (1958), "Mediocrity versus Chance in Drug Store Operating Ratios," Journal of Marketing, 22 (January), 307-312.

Bass, Frank M. (1959), "The Question of the 'Regression' Fallacy," Journal of Marketing, 23 (July), 420-424.

Bass, Frank M., Philippe Cattin and Dick R. Wittink (1977), "Market Structure and Industry Influences on Profitability," in Strategy+Structure=Performance, The Strategic Planning Imperative Hans B. Thorelli (Ed.), Indiana University Press, 181-197.

Bass, Frank M., Philippe Cattin and Dick R. Wittink (1978), "Firm Effects and Industry Effects in the Analysis of Market Structure and Profitability," Journal of Marketing Research, 15 (February), 3-10.

Baumol, William J. (1957), "On The Role of Marketing Theory," Journal of Marketing, 21 (April), 417-420.

Baumol, William J. (1959), Business Behavior, Value and Growth, N.Y: McMillan Book Co.

Baumol, William J. and Edward A. Ide (1956), "Variety in Retailing," Management Science, 3 (October), 93-101.

Baumol, William J. and M. Stewart (1971), "On The Behavioral Theory of The Firm," in The Corporate Economy, R. L. Marris and A. J. Woods (Eds.), London: McMillan Book Co.

Bearden, William O., Subhash Sharma and Jesse E. Teel (1982), "Sample Size Effects on Chi-square and Other Statistics Used in Evaluating Causal Models," Journal of Marketing Research, 19, 425-430.

Beckman, Theodere N. (1960), "Productivity in Wholesaling," in Productivity in Marketing Its Measurement and Change, University of Illinois Bulletin, 58 (August), 80-104.

Beckman, Theodore N. (1961), "Measuring Productivity in Marketing," in Proceedings Of The Business and Economics Section, Washington, D.C.: American Statistical Association, 308-318.

Beckman, Theodere N. and Robert D. Buzzell (1958), "Productivity: Facts and Fiction," Business Horizons, 1 (Winter), 24-38.

Bender, Wesley C. (1964), "Consumer Purchase Cost--Do Retailer's Recognize Them?" Journal of Retailing, 40 (Spring), 1-8,52.

Bentler, P. M. (1980), "Multivariate Analysis with Latent Variables: Causal Modeling," Annual Review of Psychology, 31, 419-456.

Bentler, P. M. (1982), "Linear Systems with Multiple Levels and Types of Latent Variables," in Systems Under Indirect Observation- Causality * Structure * Prediction, K.G. Joreskog and H. Wold (Eds.), N.Y.: North-Holland Publishing Co., 101-130.

Bentler, P. M. and D. G. Bonett (1980), "Significance Tests and Goodness-of-fit in the Analysis of Covariance Structures," Psychological Bulletin, 88, 588-606.

Bentler, P. M. and D. G. Weeks (1980), "Linear Structural Equations with Latent Variables," Psychometrika, 45, 289-308.

Berry, Brian J. L. (1967), Geography of Market Centers and Retail Distribution, Englewood Cliffs, N.J: Prentice Hall.

Berry, Brian J. L. and William L. Garrison (1958), "Recent Development of Central Place Theory," Papers and Proceedings of the Regional Science Association, 55, 107-120.

Bielby, William T. and Robert M. Hauser (1977), "Structural Equation Models," Annual Review of Sociology, 3 (Month), 137-161.

Bishop, Willard R. and G. David Hughes (1967), "Some Quantitative Aids to Merchandising Management," Journal of Retailing, 43 (Fall), 39-49.

Blalock, Hubert M. (1962), "Four Variable Causal Model and Partial Correlations," The American Journal of Sociology, 68 (September), 182-194.

Blalock, Hubert M. (1964), Causal Inferences in Nonexperimental Research, New York: W.W. Norton and Company, Inc.

Blalock, Hubert M. (1965), "Some Implications of Random Measurement Error for Causal Inferences," The American Journal of Sociology, 71, 37-47.

Blalock, Hubert M. (1968), "The Measurement Problem: A Gap Between the Languages of Theory and Research," in Methodology in Social Science Research, H. M. Blalock and A. B. Blalock (Eds.), N.Y: McMillan Book Co., 5-27.

Blalock, Hubert M. (1969a), "Multiple Indicators and the Causal Approach to Measurement Error," The American Journal of Sociology, 75, 264-272.

Blalock, Hubert M. (1969b), Theory Construction: From Verbal to Mathematical Formulation, Englewood Cliffs, N.J.: Prentice-Hall, Inc.

Blalock, Hubert M. (1979), "Measurement and Conceptualization Problems: The Major Obstacle to Integrating Theory and Research," American Sociological Review, 44, 881-894.

Blalock, Hubert M. (1982), Conceptualization and Measurement in the Social Sciences, Beverly Hills, CA: Sage Publ.

Bliss, Perry (1956), "Preretailing and Consumer Buying Patterns Over Time," Journal of Marketing, 21 (July), 83-85.

Bloom, Gordon F. (1971), "Productivity: Weak Link in our Economy," Harvard Business Review, 49 (January-February), 4-14,145.

Bock, Betty (1972), Dialogue on Concentration, Oligopoly and Profit: Concepts and Data, Conference Board.

Bohannon, Paul and George Dalton (1942), Markets in Africa, Evanston, ILL: Northwestern University Press.

Bollen, Kenneth A. (1983), Structural Equations With Latent Variables, Draft Manuscript, Darthmouth.

Bollen, Kenneth A. (1981), "Multiple Indicators: Internal Consistency or No Necessary Relationship," Working Paper, Department of Sociology, Dartmouth, NH.

Bookstein, Fred L. (1980), "Data Analysis by Partial Least Squares," in Evaluation of Econometric Models, Academic Press, 75-90.

Boomsa, A. (1982), "The Robustness of LISREL Against Small Sample Sizes in Factor Analysis Models," in Systems Under Indirect Observation: Causality * Structure * Prediction, K. G. Joreskog and H. Wold (Eds.), N.Y.: North-Holland, 148-173.

Boone, Louis E. et al (1974), "City Shoppers and Urban Identification," Journal of Marketing, 38 (July), 67-69.

Bowman, Edward H. and John B. Stewart (1956), "A Model for Scale of Operations," Journal of Marketing, 20 (January), 242-247.

Branch, Ben (1978), "The Impact of Operating Decisions on ROI Dynamics," Financial Management, 7 (Winter), 54-60.

Bridgman, Percy W. (1927), The Logic of Modern Physics, N.Y: McMillan Press.

Brock, James Leslie (1980), The Future of the Grocery Retailing Industry: A Forecast for the 1980's, Unpublished Ph.D Dissertation, Michigan State University.

Brodbeck, May (1982), "Recent Development in the Philosophy of Science," in Marketing Theory: Philosophy of Science Perspectives, R. F. Bush and S. D. Hunt (Eds.), Chicago: American Marketing Association, 1-6.

Brooks, Robert C. (1958), "A Recent Example of the Regression Fallacy," Journal of Marketing, 23 (July), 64-68.

Bruce, Grady D. (1969), "The Ecological Structure of Retail Institutions," Journal of Marketing Research, 6 (February), 48-53.

Bucklin, Louis P. (1963), "Retail Strategy and the Classification of Consumer Goods," Journal of Marketing, 27 (January), 50-55.

Bucklin, Louis P. (1965), "Postponement, Speculation and the Structure of Distribution Channels," Journal of Marketing Research, 2 (February), 26-31.

Bucklin, Louis P. (1966), A Theory of Distribution Channel Structure, Berkeley, Calif.: IBER Special Publications.

Bucklin, Louis P. (1967a), "The Concept of Mass Intra-Urban Shopping," Journal of Marketing, 31 (October), 37-42.

Bucklin, Louis P. (1967b), "Competitive Impact of a New Supermarket," Journal of Marketing Research, 4 (November), 356-361.

Bucklin, Louis P. (1970), "National Income Accounting and Distributive Trade Cost," Journal of Marketing, 34 (April), 14-22.

Bucklin, Louis P. (1971), "Trade Area Boundries: Some Issues in Theory and Methodology," Journal of Marketing Research, 8 (February), 30-37.

Bucklin, Louis P. (1972), Competition and Evolution in the Distributive Trades, Englewood Cliffs, N.J.: Prentice-Hall.

Bucklin, Louis P. (1975), "A Synthetic Index of Marketing Productivity," in 1975 American Marketing Association Educators' Conference Proceedings, 556-560.

Bucklin, Louis P. (1977), "Structure, Conduct and Productivity in Distribution," in Strategy+Structure=Performance, The Strategic Planning Imperative Hans B. Thorelli (Ed.), Indiana University Press, 219-236.

Bucklin, Louis P. (1978a), "Research in Productivity Measurement for Marketing Decisions," in Research in Marketing, Volume-1, Jagdish Sheth (Ed.), JAI Press, 1-22.

Bucklin, Louis P. (1978b), Productivity in Marketing, Chicago: American Marketing Association.

Bucklin, Louis P. (1981), "Growth and Productivity Change in Retailing," in Theory in Retailing: Traditional and Nontraditional Sources, Ronald W. Stampfl and Elizabeth C. Hirschman, (Eds.), Chicago: American Marketing Association, 21-23.

Bucklin, Louis P. (1983), "Capital Productivity in Retailing," in Productivity and Efficiency in Distribution Systems, David Gautschi (Ed.), N.Y: North-Holland, 63-73.

Buzzell, Robert D. (1963), "Is Marketing A Science," Harvard Business Review, 41 (January-February), 32-48.

Buzzell, Robert D. (1972), "Marketing and Economic Performance: Meaning and Measurement," Marketing Science Institute, (August).

Buzzell, Robert D., Bradley T. Gale and Ralph G.M. Sultan (1974), "Market Share, Profitability and Business Strategy," Working Paper, Marketing Science Institute.

Buzzell, Robert D., Bradley T. Gale and Ralph G.M. Sultan (1975), "Market Share-A Key To Profitability," Harvard Business Review, 53, 1 (January-February), 97-106.

Buzzell, Robert D. and Narci Kosann Dew (1980), "The Pilot Study of the Profit Impact of Marketing Strategies in Retailing," Working Paper, The Strategic Planning Institute.

Buzzell, Robert D. and Frederik D. Wiersema (1981), "Successful Share Building Strategies," Harvard Business Review, Vol. 59 (January-February), 135-144.

Byrne, Rusty Stieff (1981), "Sources on Productivity," Harvard Business Review, Vol. 59 (September-October), 36-42.

Cady, John F. (1975), Structural and Competitive Effects of Retail Trade Regulation: A Study of the Impact of Public Policy in Retail Market for Prescription Drugs Unpublished Ph.D Dissertation, SUNY at Buffalo.

Calder, Bobby J., Lynn W. Phillips and Alice H. Tybout (1981), "Designing Research For Application," Journal of Consumer Research, 8 (September), 197-207.

Campbell, Donald T. (1969), "Definitional versus Multiple Operationism," et al., 2 (Summer), 14-17.

Campbell, Donald T. and Donald W. Fiske (1959), "Convergent and Discriminant Validation By The Multitrait-Multimethod Matrix," Psychological Bulletin, 56 (March), 81-105.

Carman, James M. (1980), "Paradigm for Marketing Theory" in Research In Marketing, Vol.3, Howard Sheth (Ed.), JAI Press.

Carnap, R. (1956), "The Methodological Character of Theoretical Concepts," in Minnesota Studies in the Philosophy of Science, H. Feigl and M. Scriven (Eds.), Minneapolis, MN: University of Minnesota, 38-76.

Channon, Derek F. (1973), The Strategy and Structure of British Enterprise, Boston: Harvard University.

Chayes, Felix and William Kruskal (1966), "An Approximate Statistical Test For Correlations Between Proportions," Journal of Geology, 74 (September), 692-702.

Christaller, W. (1966), Central Places in Southern Germany, Englewood Cliffs, N.J: Prentice Hall.

Churchill, Gilbert A. Jr. (1979), "A Paradigm for Developing Better Measures of Marketing Constructs," Journal of Marketing Research, 14 (February), 64-73.

Churchill, Gilbert A., Neil M. Ford and Orville C. Walker, Jr., (1981), "Managing the Retail Salesforce," in Theory in Retailing: Traditional and Nontraditional Sources, Ronald W. Stampfl and Elizabeth C. Hirschman, (Eds.), Chicago: American Marketing Association, 34-50.

Churchman, West C. (1965), "Reliability of Models in the Social Sciences," in Models, Measurement and Marketing, Peter Langoff (Ed.), Englewood Cliffs, N.J: Prentice Hall, 23-38.

Clague, Ewan (1965), "An Evaluation of Current Productivity Measure for Trade," in Productivity in Marketing, J.L. Heskett (Ed.), Columbus, Ohio: College of Commerce and Administration, Ohio State University, 11-25.

Clark, J. M. (1961), Competition As A Dynamic Process, Washington; The Brookings Institute.

Clawson, Joseph C. (1974), "Fitting Branch Locations, Performance Standards, and Marketing Strategies to Local Conditions," Journal of Marketing, 38 (January), 8-14.

Cohen, Arthur I. and Ana Loud Jones (1978), "Brand Marketing in the New Retail Environment," Harvard Business Review, 56 (September-October), 141-148.

Collins, Norman R. and Lee E. Preston (1968), Concentration and Price-Cost Margins in Manufacturing Industries, Berkeley: University of California Press.

Converse, Paul D. (1942), "A Retail Trading Area," Journal of Marketing, 12 (October), 160-164.

Converse, Paul D. (1945), "The Development of a Science of Marketing," Journal of Marketing, 10 (July), 14-23.

Converse, Paul D. (1949), "New Laws of Retail Gravitation," Journal of Marketing, 14 (October), 379-384.

Converse, Paul D. (1957), "The Puzzle of Marketing Costs," Journal of Marketing, 21 (April), 439-441.

Converse, Paul D. (1959), "Mediocrity in Retailing," Journal of Marketing, 23 (April), 419-420.

Cook, Victor, Rolando Polli and Susan Douglas (1971), "The Value of Retail Exchange Services--A Measure of Market Performance," Working Paper, Marketing Science Institute, (January).

Costner, Herbert L. (1971), "Theory, Deduction and Rules of Correspondence," in Causal Models in the Social Sciences, H. M. Blalock (Ed.), Chicago: Aldine-Atherton, 299-310.

Costner, Herbert L. and Ronald Schoenberg (1973), "Diagnosing Indicator Ills in Multiple Indicator Models," in Structural Equation Models in the Social Sciences, A. S. Goldberger and O. D. Duncan (Eds.), N.Y.: Seminar Press, 167-199.

Cottrell, James L. (1973), "An Environmental Model For Performance Measurement," Journal of Retailing, 49 (Fall), 51-60.

Cox, Reavis (1948), "The Meaning and Measurement of Productivity in Distribution," Journal of Marketing, 12 (April), 433-441.

Cox, Reavis (1959), "Consumer Convenience and the Retail Structure of Cities," Journal of Marketing, 23 (April), 355-362.

Cox, William E. Jr. (1969), "A Commercial Structure Model for Depressed Neighborhoods," Journal of Marketing, 33 (July), 1-9.

Crawford, Gerald L. (1974), An Analysis of Management Factors That May Contribute to the Success or Failure of Selected Small Retailers, Unpublished Ph.D Dissertation, University of Arkansas.

Cundiff, Edward W. (1965), "Concepts in Comparative Retailing," Journal of Marketing, 29 (January), 59-63.

Cunningham, Ross M. (1951), "Evaluation of Census Tracts," Journal of Marketing, 15 (April), 463-470.

Curhan, Ronald C., Walter J. Salmon and Robert D. Buzzell (1983), "Sales and Profitability of Health and Beauty Aids and General Merchandise in Supermarkets," Journal of Retailing, 59 (Spring), 77-99.

Curtis, Richard F. and Elton F. Jackson (1962), "Multiple Indicators in Survey Research," The American Journal of Sociology, 68 (September), 195-204.

Cyert R. M. and J. G. March (1963), A Behavioral Theory of The Firm, Englewood, N.J: Prentice Hall.

Dalrymple, Douglas J. (1966), Merchandising Decision Models For Department Stores, Bureau of Business and Economic Research, Michigan State University.

Darden, William R. (1980), "A Patronage Model of Consumer Behavior, in Competitive Structure in Retail Markets: The Department Store Perspective, Ronald W. Stampfl and Elizabeth C. Hirschman (Eds.), Chicago: American Marketing Association, 43-52.

Darden, William R. et al (1983), "Review of Measurement Models in Marketing," in 1983 American Marketing Association Winter Educators Conference Proceedings, Chicago, IL., 84-89.

Darden, William R. and Robert F. Lusch (Eds.), (1983), Patronage Behavior and Retail Management, N.Y: North Holland.

Davidson, William R. (1970), "Changes in Distributive Institutions," Journal of Marketing, 34 (January), 7-10.

Davidson, William R. (1980), "To Understand Retailing in 1980's Analyze Firm's Response to Trends," Marketing News, 13 (March7), 1,13.

Davidson, William R., A.D. Bates and S.J. Bass (1976), "The Retail Life Cycle," Harvard Business Review, 54 (November-December), 89-96.

Davidson, William R. and John E. Smallwood (1980), "An Overview of Management of the Retail Life Cycle," in Competitive Structure in Retail Markets: The Department Store Perspective, Ronald W. Stampfl and Elizabeth C. Hirschman, (Eds.), Chicago: American Marketing Association, 53-62.

Davidson, William R. and Nancy E. Johnson (1981), "Portfolio Theory and Retailing Life Cycle," in Theory in Retailing: Traditional and Nontraditional Sources, Ronald W. Stampfl and Elizabeth C. Hirschman, (Eds.), Chicago: American Marketing Association, 51-63.

Dean, Joel (1960), "Marketing Productivity and Profitability," in Productivity in Marketing Its Measurement and Change, University of Illinois Bulletin, 58 (August), 53-65.

Dent, Warren and John Geweke (1980), "On Specification in Simultaneous Equation Models, in Evaluation of Econometric Models, Academic Press, 169-198.

Dholakia, Ruby Roy and Louis W. Stern (1976), "Market Power and the PIMS Data," in 1976 American Marketing Association Educators' Conference Proceedings, 451-455.

Dietz, Stephans (1973), "How to Measure Productivity in Marketing," in 1973 American Marketing Association Educators' Conference Proceedings, 163-165.

Dixon, Donald F. (1982), "The Historical Origins Of The Channel Concept," in Marketing Channels: Domestic and International Perspectives, Michael G. Harvey and Robert F. Lusch (Eds.), Norman, OK: Center for Ecomomic and Management Research, 146-151.

Douglas, Edna (1949a), "Measuring the General Trading Area-A Case Study: I," Journal of Marketing, 13 (April), 481-497.

Douglas, Edna (1949b), "Measuring the General Trading Area-A Case Study: II," Journal of Marketing, 14 (July), 46-60.

Doutt, Jeffrey Thomas (1976), Productivity in Fast-Food Retailing, Unpublished Ph.D Dissertation, University of California, Berkeley.

Dow, Louis A. (1955), "Marketing Costs and Economic Theory," Journal of Marketing, 19 (April), 346-350.

Dow, Louis A. (1957), "A Note on Marshall and Selling Costs," Journal of Marketing, 21 (January), 332-335.

Duncan, Otis D. (1966), "Path Analysis: Sociological Examples," American Journal of Sociology, 72, 1-16.

Duncan, Otis D. (1975), Introduction to Structural Equation Models, N.Y.: Academic Press.

Dyas, Gareth P. (1972), The Strategy and Structure of French Industrial Enterprise, Unpublished Ph.D Dissertation, Harvard Business School.

Eddington, Arthur S. (1933), The Nature of the Physical World, N.Y: McMillan Press.

Ekeblad, Frederick A. and A. Alspaugh (1959), "Errors in Estimates of Retail Sales," Journal of Marketing, 23 (January), 282-286.

El-Ansary, Adel I. (1979), "Perspectives on Channel Systems Performance," Working Paper, The George Washington University.

Etgar, Michael (1976), "Effects of Administrative Control on Efficiency of Vertical Marketing Systems," Journal of Marketing Research, 13 (February), 12-24.

Etgar, Michael (1977), "Letters to the Editor," Journal of Marketing, 41 (October), 14-15, 146.

Etgar, Michael (1978), "Some Methodological Issues of Empirical Research in Macromarketing," in 1978 American Marketing Association Educators' Conference Proceedings, 295-297.

Evans, Duane W. (1952), "Marketing Uses of Input-Output Data," Journal of Marketing, 17 (July), 11-21.

Farris, Paul W. and Robert D. Buzzell (1976), "The Relationships Between Changes in Industrial Advertising and Promotion Expenditures and Changes in Market Share," Working Paper, Marketing Science Institute.

Farris, Paul W. and David Reibstein (1979), "How Prices and Expenditures and Profits are Linked," Harvard Business Review, 57 (November-December), 173-184.

Ferber, Robert (1958), "Variations in Retail Sales Between Cities," Journal of Marketing, 22 (January), 295-303.

Ferber, Robert, William J. Hawkes and Manuel D. Plotkin (1976), "How Reliable are National Retail Sales Estimates," Journal of Marketing, 40 (October), 13-22.

Ferell, O. C. and J. R. Perrachione (1979), "An Inquiry into Bagozzi's Formal Theory of Exchange," in Conceptual and Theoretical Development in Marketing, O. C. Ferrell et al (Eds.), Chicago: American Marketing Association, 158-161.

Fisk, George (1961-1962), "A Conceptual Model for Studying Customer Image," Journal of Retailing, 37 (Winter), 1-8, 54.

Forbes, J. D. (1972), "Central Place Theory-- An Analytical Framework for Retail Structure," Land Economics, 48, 15-22.

Fornell, Claes (Ed.), (1982a), A Second Generation of Multivariate Analysis: Measurement and Evaluation, N.Y.: Preager Press.

Fornell, Claes (Ed.), (1982b), A Second Generation of Multivariate Analysis: Methods, N.Y.: Preager Press.

Fornell, Claes (1983), "Issues in the Application of Covariance Structure Analysis: A Comment," Journal of Consumer Research, 9 (March), 443-448.

Fornell, Claes and Fred Bookstein (1982), "Two Structural Equation Models: LISREL and PLS Applied to Consumer Exit-Voice Theory," Journal of Marketing Research, 19 (November), 440-452.

Fornell, Claes and Oded Gur-Arie (1983), "Validity Assessment in Covariance Structure Analysis Via Selection Procedures," in 1983 American Marketing Association Fall Educators Conference Proceedings, 253-257.

Fornell, Claes and David Larcker (1981a), "Evaluating Structural Equation Models with Unobservable Variables and Measurement Error," Journal of Marketing Research, 18 (February), 39-50.

Fornell, Claes and David Larcker (1981b), "Structural Equation Models with Unobservable Variables and Measurement Error: Algebra and Statistics," Journal of Marketing Research, 18 (August), 382-388.

Fornell, Claes and David Larcker (1984), "Misapplication of Simulations in Structural Equation Models: Reply to Acito and Anderson," Journal of Marketing Research, 21 (February), 113-117.

Fornell, Claes, Gerard J. Tellis and George M. Zinkhan (1982), "Validity Assessment: A structural Equations Approach Using Partial Least Squares," in 1982 American Marketing Association Fall Educators Conference Proceedings, 405-409.

Fornell, Claes and William T. Robinson (1983), "Industrial Organization and Consumer Satisfaction/Dissatisfaction," Journal of Consumer Research, 9 (March), 403-412.

Freeman, John H. and Jerrold E. Kronenfeld (1973), "Problems of Definitional Dependency: The Case of Administrative Intensity," Social Forces, 52 (September), 108-121.

Friedman, Brian and J.L. Corey (1974), "Productivity in Gasoline Stations," Monthly Labor Review, 97 (October), 26-32.

Frye, J.R. (1975), "Marketing Productivity Can Be Measured if You Want to do so," in 1975 American Marketing Association Educators' Conference Proceedings, 551-555.

Fuchs, Victor R. (1968), The Service Economy, New York: National Bureau of Economic Research, Princeton University Press.

Fuguitt, Glenn V. and Stanley Lieberson (1973-1974), "Correlation of Ratios or Difference Scores Having Common Terms," Sociological Methodology, H. Costner (Ed.), San Francisco: Jossey-Bass Publishers, 128-144.

Gale, Bradley T. (1975), "Selected Findings From the PIMS Project: Market Strategy Impacts on Profitability," in 1975 American Marketing Association Educators' Conference Proceedings, 471-475.

Gale, Bradley T. (1980), "Can More Capital Buy Higher Productivity?" Harvard Business Review, 58 (July-August), 78-86.

Gautschi, David Alan (1979), Models of Individual Retail Center Choice, Unpublished Ph.D Dissertation, University of California, Berkeley.

George, Kenneth D. (1966), Productivity in Distribution, London: Cambridge University Press.

George, Kenneth D. and T. Ward (1973), "Productivity Growth in the Retail Trade," Oxford Bulletin of Economics and Statistics, 35 (February), 31-47.

Geweke, J. F. and K. J. Singleton (1980), "Interpreting the Likelihood Ratio Statistic in Factor Analysis Models When Sample Size is Small," Journal of the American Statistical Association, 73, 133-137.

Gillett, Peter L. (1970), "A Profile of Urban In-Home Shoppers," Journal of Marketing, 34 (July), 40-45.

Gist, Ronald R. (1968), Retailing: Concepts and Decisions, New York: John Wiley and Son.

Goldberger, Arthur (1964), Econometric Theory, New York: John Wiley and Sons, Inc.

Goldberger, Arthur (1971), "Econometrics and Psychometrics: A Survey of Communalities," Psychometrica, 36, 2 (June), 83-107.

Goldberger, Arthur (1973), "Structural Equation Models: An Overview," in Structural Equation Models in the Social Sciences, A. S. Goldberger and O. D. Duncan (Eds.), N.Y: Seminar Press, 1-17.

Goldberger, Arthur (1977), "Structural Equation Models in the Social Sciences," Econometrica, 40, 979-1000.

Goldberger, Arthur S. and Otis Dudley Duncan (Eds.), (1973), Structural Equation Models in the Social Sciences, N.Y.: Seminar Press.

Goldstucker, Jac (1965), "Trading Areas" in Science in Marketing, George Schwartz (Ed.), New York: John Wiley and Sons, Inc., 287-300.

Greenberg, Leon (1973), A Practical Guide to Productivity Measurement, Washington, D.C.: Bureau of National Affairs, Inc.

Greyser, Stephen (1980), "Marketing Issues," Journal of Marketing, 44 (Winter), 89-92.

Guiltinan, Joseph P. (1973), "Implications of a Value-Added Tax for Marketing Efficiency," in 1973 American Marketing Association Educators' Conference Proceedings, 455-458.

Haines, George H. Jr., Leonard S. Simon and Marcus Alexis (1972), "Maximum Likelihood Estimation of Central City Trading Areas," Journal of Marketing Research, 9 (May), 154-159.

Hall, Margaret and J. Knapp (1957), "Productivity in Distribution," Productivity Measurement Review, 8 (February), 22-38.

Hall, Margaret, John Knapp and Christopher Winsten (1961), Distribution in Great Britain and North America-A Study in Structure and Productivity, London: Oxford University Press.

Halsey, Kenneth D. (1973), A Comparison of Selected Franchised and Independent Businesses and Their Success and Profitability in the State of Nebraska, Unpublished Ph.D Dissertation, University of Northern Colorado.

Hansen, Robert A., Terry Deutscher and Eric N. Berkowitz (1977), "Institutional Positioning: A Dynamic Concept for Retail Positioning," Journal of the Academy of Marketing Science, 5, 3 (Summer), 185-194.

Hansen, Michael H. and Charles B. Weinberg (1979), "Retail Market Share in a Competitive Market," Journal of Retailing, 55, 1 (Spring), 37-46.

Heeler, Roger M. et al (1973), "Modeling Supermarket Product Selection," Journal of Marketing Research, 10 (February), 34-37.

Heeler, Roger M. and Michael L. Ray (1972), "Measure Validation in Marketing," Journal of Marketing Research, 9 (November), 361-370.

Hempel, Carl G. (1952), Fundamentals of Concept Formation in Empirical Sciences, The University Of Chicago Press.

Hempel, Carl G. (1966), Philosophy of Natural Science, Englewood Cliffs, New Jersey: Prentice-Hall, Inc.

Herrmann, Robert O. and Leland L. Beik (1968), "Shoppers' Movements Outside Their Local Retail Area," Journal of Marketing, 32 (October), 45-51.

Hindersman, Charles H. (1960), "The Evolving Downtown-Suburban Retail Pattern," Journal of Marketing, 25 (October), 59-62.

Hirschman, Elizabeth C. (1978), "A Descriptive Theory of Retail Market Structure," Journal of Retailing, 54, 4 (Winter), 29-48.

Hirschman, Elizabeth C. and Ronald W. Stampfl (1980a), "Role of Retailing in the Diffusion of Popular Culture: Microperspectives," Journal of Retailing, 56 (Spring).

Hirschman, Elizabeth C. and Ronald W. Stampfl (1980b), "Retail Research: Problems, Potentials and Priorities," in Competitive Structure in Retail Markets: The Department Store Perspective, Ronald W. Stampfl and Elizabeth C. Hirschman, (Eds.), Chicago: American Marketing Association, 68-77.

Hirschman, Elizabeth C. (1981), "Retail Research and Theory," Paper presented at the First Annual Faculty Consortium--Retailing in the Contemporary Environment, Madison, Wisconsin (July).

Hise, Richard T. et al (1983), "Factors Affecting the Performance of Individual Chain Store Units: An Empirical Analysis," Journal of Retailing, 59 (Summer), 22-39.

Holdren, Bob R. (1960), The Structure Of A Retail Market And The Market Behavior Of Retail Units, Englewood Cliffs, New Jersey: Prentice-Hall, Inc.

Hollander, Stanley C. (1966), "The Wheel of Retailing," Journal of Marketing, 30 (July), 37-42.

Hollander, Stanley C. (1980), "Oddities, Nostalgia, Wheels and Other Patterns in Retail Evolution," in Competitive Structure in Retail Markets: The Department Store Perspective, Ronald W. Stampfl and Elizabeth C. Hirschman, (Eds.), Chicago: American Marketing Association, 78-87.

Hollander, Stanley C. (1981), "Retail Theory: Some Criticism and Some Admiration," in Theory in Retailing: Traditional and Nontraditional Sources, Ronald W. Stampfl and Elizabeth C. Hirschman, (Eds.), Chicago: American Marketing Association, 84-94.

Hower, Ralph (1943), History of Macy's of New York, Cambridge, Mass.: Harvard University Press.

Huff, David L. (1964), "Defining and Estimating A Trade Area," Journal of Marketing, 28 (July), 34-38.

Huff, David L. (1966), "A Programmed Solution for Approximating an Optimum Retail Location," Land Economics, 62 (April), 293-303.

Huff, David L. (1981), "Retail Location Theory," in Theory in Retailing: Traditional and Nontraditional Sources, Ronald W. Stampfl and Elizabeth C. Hirschman, (Eds.), Chicago: American Marketing Association, 108-121.

Hughes, David G. (1966), "Developing Marketing Strategy Through Multiple Regression," Journal of Marketing Research, 3 (November), 112-115.

Hughes, Adele M. and Ray R. Serpkenci (forthcoming), "Comments On Labor Productivity in Retailing," Journal of Marketing

Hui, Baldwin S. and Jagpal S. Harsharanjett (1979), "The Partial Least Squares (PLS), Approach to Causal Models With Latent Variables," 1979 American Marketing Association Educators' Conference Proceedings, 90-92.

Hunt, Shelby (1976a), "The Nature and Scope of Marketing," Journal of Marketing, 40 (July), 17-28.

Hunt, Shelby D. (1976b), Marketing Theory: Conceptual Foundations of Research in Marketing, Columbus, Ohio: Grid, Inc.

Hunt, Shelby (1978), "A General Paradigm of Marketing: In Support of the 3-D Model," Journal of Marketing, 42 (April), 107-110.

Hunt, Shelby (1982), "Are The Logical Empiricist Models of Explanation Dead?" in Marketing Theory: Philosophy of Science Perspectives, R. F. Bush and S. D. Hunt (Eds.), Chicago: Amarican Marketing Association, 7-10.

Hunt, Shelby D. and John J. Burnett (1982), "The Macromarketing/Micromarketing Dichotomy: A Taxonomical Model," Journal of Marketing, 46 (Summer), 11-26.

Hunt, Shelby (1983), Marketing Theory The Philosophy of Marketing Science, Homewood, Illinois: Richard D. Irwin, Inc.

Hutchinson, K. D. (1952), "Marketing As A Science: An Appraisal," Journal of Marketing, 16 (January), 286-293.

Ingene, Charles A. (1981), "Analyzing Productivity in Marketing: A Model and Some Hypotheses," Working Paper, The University of Texas at Dallas, (November).

Ingene, Charles A. (1982), "Labor Productivity in Retailing," Journal of Marketing, 46 (Fall), 75-90.

Ingene, Charles A. (1983a), "Productivity in Spatial Retailing: Private and Public Perspectives," Working Paper, University of Washington (January).

Ingene, Charles A. (1983b), "Are There Scale Economies in American Retailing," Working Paper, University of Washington (April).

Ingene, Charles A. (1983c), "A Conceptual Model and Empirical Evidence of Labor Productivity in Department Stores," in Productivity and Efficiency in Distribution Systems, David A. Gautschi (Ed.), N.Y: North Holland, 77-92.

Ingene, Charles A. and Robert F. Lusch (1980), "Market Selection Decisions For Department Stoes," Journal of Retailing, 56,3 (Fall), 21-40.

Ingene, Charles A. and Robert F. Lusch (1981), "A Model of Retail Structure," in Research in Marketing, Volume-5, Jagdish Sheth (Ed.), JAI Press, 101-164.

Jain, Arun K. and Vijay Mahajan (1979), "Evaluating the Competitive Environment in Retailing Using Multiplicative Competitive Interactive Model," in Research in Marketing, Vol.2, 217-235.

Jeuck, John E. (1953), "Marketing Research--Milestone or Millstone," Journal of Marketing, 17 (April), 381-387.

Johnston, J. (1972), Econometric Methods, 2nd Ed., New York: McGraw-Hill Book Co.

Jones, Fred M. (1943), "A New Interpretation of Marketing Functions," Journal of Marketing, 7 (January), 256-260.

Jones, Larry D. (1973), An Analysis of Behavior and Performance in the Food Retailing Industry Using Experimental Business Gaming, Unpublished Ph.D Dissertation, Purdue University.

Joreskog, Karl G. (1966), "Testing a Simple Structure Hypothesis in Factor Analysis," Psychometrika, 31, 165-178.

Joreskog, Karl G. (1969), "A General Approach of Confirmatory Maximum Likelihood Factor Analysis," Psychometrika, 34, 183-202.

Joreskog, Karl G. (1973), "A General Method For Estimating Linear Structural Equation System," in Structural Equation Models in the Social Sciences, A. S. Goldberger and O. D. Duncan (Eds.), N.Y.: Seminar Press, 85-112.

Joreskog, Karl G. (1978), "Structural Analysis of Covariance and Correlation Matrices," Psychometrika, 43, 443-477.

Joreskog, Karl G. and Arthur S. Goldberger (1972), "Factor Analysis by Generalized Least Squares," Psychometrika, 37, 243-260.

Joreskog, Karl G. and Arthur S. Goldberger (1975), "Estimation of a Model with Multiple Indicators and Multiple Causes of a Single Latent Variable," Journal of American Statistical Association, 70, 631-639.

Joreskog, Karl G. and H. Wold (Eds.), (1982a), Systems Under Indirect Observation- Causality * Structure * Prediction, Part I, N.Y.: North-Holland Publishing Co.

Joreskog, Karl G. and H. Wold (1982b), "The ML and PLS Techniques For Modeling With Latent Variables," in Systems Under Indirect Observation: Causality * Structure * Prediction K.G. Joreskog and H. Wold (Eds.), N.Y.: North-Holland Publishing Co., 263-270.

Joreskog, Karl G. and D. Sorbom (1979), Advances in Factor Analysis and Structural Equation Models, Cambridge: Abt Books.

Joreskog, Karl G. and D. Sorbom (1982), "Recent Developments in Structural Equation Modeling," Journal of Marketing Research, 19 (November), 404-416.

Joreskog, Karl G. and Dag Sorbom (1983), LISREL: Analysis of Linear Structural Relationships by the Method of Maximum Likelihood, USER'S GUIDE-Versions V and VI, Department of Statistics, University of Upsala, Sweden.

Jung, A. F. (1959), "Is Reilley's Law of Retail Gravitation Always True?" Journal of Marketing, 27 (October), 62-63.

Kahane, H. (1973), Logic and Philosophy, 2nd Ed., Belmont, Calif.: Wadsworth.

Karch, Nancy (1984), "Excellent American Retail Companies," New York: McKinsey and Company.

Kasarda, John D. and Patrick D. Nolan (1979), "Ratio Measurement and Theoretical Inference in Social Research," Social Forces, 58 (September), 212-227.

Kasulis, Jack J. and Robert F. Lusch (1981), "Validating The Retail Store Image Concept," Journal of Academy of the Marketing Science, 9, 4 (Fall), 419-435.

Keat R. and J. Urry (1975), Social Theory as Science, London: Routledge and Kega Paul.

Kelley, Eugene J. (1963), "Retail Concentration and Expansion: Scope, Problems and Opportunities," in 35th Annual Boston Conference on Distribution, International Marketing Institute, 101-110.

Kelley, Robert F. (1967), "Estimating Ultimate Performance Levels of New Retail Outlets," Journal of Marketing Research, 4 (February), 13-19.

Kendrick, John (1961), Productivity Trends in the United States, New York: National Bureau of Economic Research, Princeton University Press.

Kendrick, John (1973), Postwar Productivity Trends in the United States 1948-1969, Columbia University Press for NBER.

Kendrick, John W. and A. Creamer (1965), Measuring Company Productivity, New York: National Industrial Conference Board, Inc.

Kerin, Roger A. and Richard D. Miller (1981), "Diversity of Retail Operations and Financial Performance," in 1981 American Marketing Association Educators' Conference Proceedings, 24-26.

Kinney, William R. Jr. (1969), Measuring Performance in Multi-Outlet Businesses, Division of Research, East Lansing: Michigan State University.

Kirkpatrick, Jerry (1982), "Theory and History in Marketing," in Marketing Theory: Philosophy of Science Perspectives, R. F. Bush and S. D. Hunt (Eds.), Chicago: American Marketing Association, 47-51.

Konopa, Leonard J. (1968), "An Analysis of Some Changes in Retail Productivity Between 1948 and 1963," Journal of Retailing, 44, 3 (Fall), 57-67.

Kotler, Philip and Sidney J. Levy (1969), "Broadening the Concept of Marketing," Journal of Marketing, 33 (January), 10-15.

Kotler, Philip (1971), Marketing Decision Making: A Model Building Approach, New York: Holt, Rinehart and Winston, Inc.

Kotler, Philip (1972a), "A Generic Concept of Marketing," Journal of Marketing, 36 (April), 46-54.

Kotler, Philip (1972b), "Defining The Limits of Marketing," in Marketing Education and The Real World and Dynamic Marketing in a Changing Environment, B. W. Becker and H. Becker (Eds.), Chicago: American Marketing Association, 48-56.

Kotler, Philip and Gerald Zaltman (1971), "Social Marketing: An Approach to Planned Social Change," Journal of Marketing, 35, (July), 3-12.

Kuhn, Thomas (1970), The Structure of Scientific Revolutions, 2nd. Ed., The University of Chicago Press.

Kuhn, Thomas (1971), "Second Thoughts on Paradigm," in The Structure of Scientific Theories, Frederick Suppe (Ed.), Urbana, Illinois.

LaLonde Bernard J. (1962), Differentials in Supermarket Drawing Power, Bureau of Business and Economic Research, Michigan State University.

Lakatos, Imre and Alan Musgrave (Eds.), (1970), Criticism and The Growth of Knowledge, Cambridge University Press.

Langbein, Laura Irwin and Allan J. Lichtman (1978), Ecological Inference, Beverly Hills, California: Sage Publications.

Langhuff, Peter (Ed.), (1965), Models, Measurement and Marketing, Englewood, New Jersey: Prentice-Hall, Inc.

Lazer, William and Eugene J. Kelley (1960), "Interdisciplinary Horizons in Marketing," Journal of Marketing, 25 (October), 24-30.

Li, C. C. (1975), Path Analysis- A Primer, Pacific Grove, CA: Boxwood Press.

Lipstein, Benjamin (1981), "A Review of Retail Store Experiments," in Theory in Retailing: Traditional and Nontraditional Sources, Ronald W. Stampfl and Elizabeth C. Hirschman, (Eds.), Chicago: American Marketing Association, 95-107.

Liu, Ben-chieh (1970), "Determinants of Retail Sales in Large Metropolitan Areas, 1954 and 1963," Journal of the American Statistical Association, 65 (December), 1460-1473.

Liu, Ben-chieh (1971), "Growth of Retail Sales, Population and Income in SMSA's, 1952-1966," The Quarterly Review of Economics and Business, 11 (Summer), 17-25.

Lockley, Lawrence C. (1951), "A Measure of Retail Efficiency," Journal of Marketing, 15 (April), 482-483.

Lodish, Leonard M. (1982), "A Marketing Decision Support System for Retailers," Marketing Science, 1 (Winter), 31-56.

Long, Scott J. (1976), "Estimation and Hypothesis Testing in Linear Models Containing Measurement Error," Sociological Methods and Research, 5 (November), 157-206.

Long, Susan B. (1979), "The Continuing Debate Over The Use Of Ratio Variables: Facts and Fiction," Sociological Methodology, K. F. Schuessler (Ed.), San Fransisco: Jossey-Bass Publishers, 37-67.

Losch, A. (1954), The Economics of Location, New Haven: Yale University Press.

Luck, David (1969), "Broadening the Concept of Marketing--Too Far," Journal of Marketing, 33 (July), 53-55.

Luck, David (1974), "Social Marketing: Confusion Compounded," Journal of Marketing, 38 (October), 70-72.

Lusch, Robert F. (1976), "Sources of Power: Their Impact on Intrachannel Conflict," Journal of Marketing Research, 13 (November), 382-390.

Lusch, Robert F. (1982), Management of Retail Enterprises, Boston: Kent Publishing Company.

Lusch, Robert F. and Charles A. Ingene (1980a), "The Predictive Validity of Alternative Measures of Inputs and Outputs in Retail Production Functions," in 1980 American Marketing Association Educators' Conference Proceedings, 330-333.

Lusch, Robert F. and Charles A. Ingene (1980b), "A Theory of Labor Productivity in Department Store Retailing," in Competitive Structure in Retail Markets: The Department Store Perspective, Ronald W. Stampfl and Elizabeth C. Hirschman, (Eds.), Chicago: American Marketing Association, 98-107.

Lusch, Robert F. and Ray R. Serpkenci (1982), "Correlates of Working Capital Productivity in Marketing Channels: A Macromarketing Perspective," in Marketing Theory: Philosophy of Science Perspectives, R. F. Bush and S. D. Hunt (Eds.), Chicago: American Marketing Association, 273-276.

Lusch, Robert F. and Ray R. Serpkenci (1983), "Improving Your Financial Performance in Retailing," Business, 33 (January-March), 9-18

Lusch, Robert F. and Ray R. Serpkenci (1984), "Job Outcomes of Retail Store Managers," Working Paper, The University of Oklahoma (January).

Lusch, Robert F. and Ronald W. Stampfl (1981), "New Realities of Retail Management," in Theory in Retailing: Traditional and Nontraditional Sources, Ronald W. Stampfl and Elizabeth C. Hirschman, (Eds.), Chicago: American Marketing Association, 122-132.

Lusch, Robert F. and William R. Darden (Eds.), (1981), Retail Patronage Theory--Workshop Proceedings, Norman, Oklahoma: Center For Economic and Management Research.

Mac Millan, Alexander and Richard L. Daft (1979), "Administrative Intensity and Ratio Variables: The Case Against Definitional Dependency," Social Forces, 58 (September), 228-248.

Machlup, Fritz (1969a), "Positive and Normative Economics," in Economic Means and Social Ends: Essays in Political Economies, Robert L. Heilborner (Ed.), Englewood, N.J: Prentice-Hall, Inc, 99-124.

Machlup, Fritz (1969b), "If Matter Could Talk," in Philosophy, Science, and Method: Essays in Honor of Ernest Nagel, Sidney Morgenbener et al (Eds.), N.Y: St. Martin's Press, 286-305.

Machlup, Fritz (1978), Methodology of Economics and Other Social Sciences, N.Y: Academic Press.

Mackay, David B. (1973), "Spatial Measurement of Retail Store Demand," Journal of Marketing Research, 10 (November), 447-453.

Maddala, G.S. (1977), Econometrics, New York: McGraw-Hill Book Co.

Mallen, Bruce and M. Haberman (1975), "Economies Of Scale: A Determinant of 'Overstoring and Superstoring?'," in Canadian Association of Administrative Sciences Proceedings, 4/158-4/167.

Mammone, James L. (1980), "Productivity Measurement: A Conceptual Overview," Management Accounting, 62 (June), 36-42.

Mammone, James L. (1980), "A Practical Approach To Productivity Measurement," Management Accounting, 62 (July), 40-44.

Mann, M. (1966), "Seller Concentration, Barriers to Entry and Rate Of Return in 30 Industries, 1950-1960," Review of Economics and Statistics, 48 (August), 296-307.

Mark, Jerome A. (1975), "The BLS Program for Measuring Productivity in the Marketing Area," in 1975 American Marketing Association Educators' Conference Proceedings, 561-563.

Martineau, Pierre (1958), "The Personality of the Retail Store," Harvard Business Review, 36 (January-February), 47-58.

Mason, Joseph Barry and Charles T. Moore (1970-71), "An Empirical Reappraisal of Behavioristic Assumptions in Trading Area Studies," Journal of Retailing, 46, 4 (Winter), 31-37.

Massy, William F. and Ronald E. Frank (1966), "Analysis of Retailer Advertising Behavior," Journal of Marketing Research, 3 (November), 378-383.

May, Eleanor G. (1971), "Image Evaluation of A Department Store," Working Paper, Marketing Scoeice Institute (October).

May, Eleanor G. (1972), "Store-To-Store and Department-To-Department Image Comparisons," Working Paper, Marketing Science Institute (March).

May, Eleanor G. (1981), "Product Positioning and Segmentation Strategy: Adaptable to Retail Stores?" in Theory in Retailing: Traditional and Nontraditional Sources, Ronald W. Stampfl and Elizabeth C. Hirschman, (Eds.), Chicago: American Marketing Association, 144-154.

McAnally, A. (1963), "The Measurement of Retail Productivity," Journal of Industrial Economics, 11 (April), 87-95.

McCammon, Bert C. Jr (1971), "Alternative Explanations of Institutional Change and Channel Evolution" in Towards Scientific Marketing, Stephen A. Greyser (Ed.), Chicago: American Marketing Association, 477-490.

McCammon, Bert C. Jr. and William Hammer (1974), "A Frame of Reference for Improving Productivity in Distribution," Atlanta Economic Review, 59 (September-October), 9-13.

McCammon, Bert C. Jr. and Albert D. Bates (1977), "Reseller Strategies and the Financial Performance of the Firm," in Strategy + Structure = Performance, Hans Thorelli (Ed.), Bloomington: Indiana University Press, 146-178.

McCammon, Bert C. Jr., Jack J. Kasulis and Jack A. Lesser (1980), "The New Parameters of Retail Competition: The Intensified Struggle for Market Share," in Competitive Structure in Retail Markets: The Department Store Perspective, R. W. Stampfl and E. C. Hirschman (Eds.), Chicago: American Marketing Association, 108-118.

McConnel, Campbell R. (1979), "Why is U.S. Productivity Slowing Down?" Harvard Business Review, 57 (March-April), 36-60.

McInnes, William (1956), "The Analytical Problem Approach to Marketing and Market Potentials," Journal of Marketing, 20 (October), 190-192.

McNair, Malcolm P. (1931), "Trends in Large Scale Retailing," Harvard Business Review, 10 (October), 31.

McNair, Malcolm P. (1958), "Significant Trends and Developments in the Postwar Period," in Competitive Distribution in a Free High-Level Economy," A.B. Smith (Ed.), Pittsburgh, Pa.: University of Pittsburgh Press.

McNulty, Paul J. (1967), "A Note on the History of Perfect Competition," Journal of Political Economy, (August), 395-399.

McNulty, Paul J. (1968), "Economic Theory and The Meaning of Competition," Quarterly Journal of Economics, (November), 639-656.

Mill, J. S. (1959), A System of Logic, 8th. Edition, London: Longmans.

Mills, Harlan D. (1961), "Marketing As A Science," Harvard Business Review, 39 (September-October), 137-142.

Montgomery, David B. and Glen L. Urban (1969), Management Science in Marketing, New Jersey: Prentice-Hall, Inc.

Morey, Richard C. (1980), "Measuring the Impact of Service Level on Retail Sales," Journal of Retailing, 56, 2 (Summer), 81-90.

Morgenstern, Oskar (1972a), "Descriptive, Predictive and Normative Theory," Kyklos, 25 , 699-714.

Morgenstern, Oskar (1972b), "Thirteen Critical Points in Contemporary Economic Theory: An Interpretation," The Journal of Economic Literature, 10 (December), 1163-1189.

Moyer, M.S. (1972), "Management Science in Marketing," Journal of Marketing, 36 (January), 3-9.

Mueller, Willard and Leon Garoian (1961), Changes in the Market Structure of Grocery Retailing, Madison: The University of Wisconsin Press.

Naert, Phillippe and Peter Leeflang (1978), Building Implementable Marketing Models, Leiden, Netharlands: Martinus Nijhoff, Social Science Division.

Nagel, Ernest (1961), The Structure of Science: Problems in the Logic of Scientific Explanation, N.Y: Harcourt, Brace and World.

Nakanishi, Masao and Lee G. Cooper (1974), "Parameter Estimation for Multiplicative Competitive Interactive Models-- Least Squares Approach," Journal of Marketing Research, 11 (August), 303-311.

Namboodiri, Krishnan N., Lewis F. Carter and Hubert M. Blalock (1975), Applied Multivariate Analysis and Experimental Designs, N.Y.: McGraw Hill Book Co., 535-572.

National Association of Marketing Teachers (1935), "Definitions of Marketing Terms," National Marketing Review, (Fall), 166.

Nevin, John R. and Ruth A. Smith (1981), "The predictive Accuracy Of A Retail Gravitation Model: An Empirical Evaluation," in 1981 American Marketing Association Educators' Conference Proceedings.

Oaks, Clinton L. (1956), "Organizing For Retail Decentralization," Journal of Marketing, 20 (January), 255-261.

Ofer, Gur (1973), "Returns To Scale In Retail Trade," Review of Income and Wealth, 20, 4 (December), 263-384.

Page, Albert L. (1979), "A Test Of The Share/Price Market Planning Relationship In One Retail Environment," Journal Of The Academy Of Marketing Science, 7 (Winter), 25-39.

Palamountain, J. C. Jr., (1955), The Politics of Distribution, Cambridge, MA: Harvard University Press.

Parameswaran, Ravi et al (1979), "Measuring Reliability: A Comparison of Alternative Techniques," Journal of Marketing Research, 16 (February), 18-25.

Parsons, Leonard J. and Randall L. Schultz (1976), Marketing Models and Econometric Research, N.Y: North-Holland.

Paul, Robert J. and Robert D. Schooler (1970), "Activity - Productivity Analysis in Large and Small Department Stores-- A Comparative Review," Journal of Retailing, 46 (Spring), 41-49, 76.

Pavan, Robert J. (1972), The Strategy and Structure of Italian Enterprise, Unpublished Ph.D Dissertation, Harvard Business School.

Pearson, Karl (1897), "On A Form of Spurious Correlation which may arise when Indices are used in the Measurement of Organs," Proceedings of the Royal Society of London, 60 (February), 489-497.

Pedhazur, Elazor J. (1982), Multiple Regression in Behavioral Research, Holt Rinehart and Winston, Ch.16.

Pessemier, Edgar A. (1979), "Retail Patronage Behavior," Working Paper, Purdue University.

Pessemier, Edgar A. (1980), "Store Image and Positioning," Journal of Retailing, 56 (Spring), 94-106.

Peter, J. Paul (1979), "Reliability: A Review of Psychometric Basics and Recent Marketing Practices," Journal of Marketing Research, 16 (February), 6-17.

Peter, J. Paul (1981), "Construct Validity: A Review of Basic Issues and Marketing Practices," Journal of Marketing Research, 18 (May), 133-145.

Peter, J. Paul (1982), "Current Issues in the Philosophy of Science: Implications for Marketing Theory-- A Panel Discussion," in Marketing Theory: Philosophy of Science Perspectives, R. F. Bush and S. D. Hunt (Eds.), Chicago: American Marketing Association, 11-16.

Peters, William S. (1957), "Controls of Stocks in Grocery Retailing," Journal of Retailing, 22 (October), 148-153.

Peterson, Robert A. and Roger A. Kerin (1983), "Store Image Measurement in Patronage Research," in Patronage Behavior and Retail Management, William R. Darden and Robert F. Lusch (Eds.), N.Y: North Holland.

Pfeffer, J. and G. R. Salancik (1978), The External Control of Organizations, N.Y: Harper and Row.

Phillips, Charles F. (1958), "Trading Stamps and Retail Failures," Journal of Retailing, 22 (January), 304-305.

Phillips, Lynn W. (1981), "Assessing Measurement Error In Key Informant Reports: A Methodological Note On Organizational Analysis in Marketing," Journal of Marketing Research, 18 (November), 395-415.

Phillips, Lynn W. (1982), "Exploring Control Losses in Corporate Marketing Channels: An Organizational Analysis," Journal of Marketing Research, 19 (November), 525-549.

Phillips, Lynn W., Dae R. Chang and Robert D. Buzzell (1983), "Product Quality, Cost Position and Business Performance: A Test of Some Key Hypotheses," Journal of Marketing, 47 (Spring), 26-43.

Pickle, Hall et al (1970-71), "Customer Satisfaction in Small Business," Journal of Retailing, 46 (Winter), 38-49.

Porter, Michael E. (1976), Intrabrand Choice, Strategy and Bilateral Market Power, Cambridge, MA: Harvard University Press.

Preston, Lee E. and Norman R. Collins (1966), "The analysis of Market Efficiency," Journal of Marketing Research, 3 (May), 154-162.

Rao, Vithala R. (1972), "Alternative Econometric Models of Sales-Advertising Relationships," Journal of Marketing Research, 9 (May), 177-181.

Reilley, William R. (1931), The Law of Retail Gravitation, N.Y: W. J. Reilley Co.

Reynolds, Robert F. (1953), "A Test of the Law of Retail Gravitation," Journal of Marketing," 17 (January), 273-277.

Ring, Lawrence J., Charles W. King and D. J. Tigert (1980), "Market Structure and Retail Position," in Competitive Structure in Retail Markets: The Department Store Perspective, R. W. Stampfl and E. C. Hirschman (Eds.), Chicago: American Marketing Association, 149-160.

Rivers, Richard and Robert Welker (1981), "Estimating Profit Performance from Similar Profit Centers, " Journal of the Academy of Marketing Science, 9 (Spring), 127-146.

Robicheaux, Robert A. (1981), "GMROI/Share Product Portfolio Analysis," in 1981 American Marketing Association Educators' Conference Proceedings, 31-34.

Robin, Donald (1977a), "The Boundaries of Marketing," in 1977 Fall Educators Conference Proceedings, Chicago: American Marketing Association, 548.

Robin, Donald (1977b), "Letters to the Editor," Journal of Marketing, 41 (January), 136-137.

Rosenbloom, Bert (1976), "The Trade Area Mix and Retailing Mix: A Retail Strategy Matrix," Journal of Marketing, 40 (October), 58-66.

Rosenbloom, Bert and Leon G. Schiffman (1981), "Retailing Theory: Perspectives and Approaches," in Theory in Retailing: Traditional and Nontraditional Sources, Ronald W. Stampfl and Elizabeth C. Hirschman, (Eds.), Chicago: American Marketing Association, 168-179.

Ross, Will H. (1977), "Letters to the Editor," Journal of Marketing, 41 (April), 10-11.

Rudner, Richard (1966), Philosophy of Social Science, Englewood Cliffs, N.J: Prentice-Hall, Inc.

Rumelt, Richard P. (1974), Strategy, Structure and Economic Performance, Boston: Harvard University.

Russell, Vera Kilduff (1957), "The Relationship Between Income and Retail Sales in Local Areas," Journal of Marketing, 21 (January), 239-332.

Ruttan, Vernon W. (1964), "Measuring Productivity Changes in Marketing," in Marketing Concepts in Changing Times, American Marketing Association Educators' Conference Proceedings, Chicago: American Marketing Association, 339-351.

Ryan, Franklin W. (1935), "Functional Elements of Market Distribution," Harvard Business Review, 13 (January), 205-234.

Ryan, Michael and John O'Shaughnessy (1982), "Scientific Explanation and Technological Prediction," in Marketing Theory: Philosophy of Science Perspectives, R. F. Bush and S. D. Hunt (Eds.), Chicago: American Marketing Association, 22-25.

Saris, W. E., W. M. de Pijper and P. Zegwaart (1979), "Detection of Specification Errors in Linear Structural Equation Models," in Sociological Methodology, Karl F. Schuessler (Ed.), S.F.: Jossey-Bass Publishers, 151-171.

Sauer, William J., Nancy Nighswonger and Gerald Zaltman (1982), "Current Issues in Philosophy of Science: Implications for the Study of Marketing," in Marketing Theory: Philosophy of Science Perspectives, R. F. Bush and S. D. Hunt (Eds.), Chicago: American Marketing Association, 17-21.

Savitt, Ronald (1975), "Efficiency and Size in Canadian Supermarkets," in Canadian Association of Administrative Sciences Proceedings, 4/225-4/232.

Sawyer, Alan G. and Thomas J. Page (1983), "Incremental Goodness of Fit in Structural Equation Models in Marketing Research," 1983 American Marketing Association Winter Educators Conference Proceedings, 249-252.

Scherer, F. M. (1980), Industrial Market Structure and Economic Performance, 2nd. Ed., Chicago: Rand McNally College Publishing Co.

Schiff, Michael (1960), "The Sales Territory as a Fixed Asset," Journal of Marketing, 25 (October), 51-53.

Schiffman, Leon G., Joseph F. Dash and William R. Dillon (1977), "The Contribution of Store-Image Characteristics to Store-Type Choice," Journal of Retailing, 53 (Summer), 3-14, 46.

Schoeffler, Sidney (1977), "Cross-Sectional Study of Strategy, Structure and Performance: Aspects of the PIMS Program," in Strategy + Structure = Performance: The Strategic Planning Imperative, Hans B. Thorelli (Ed.), Indiana University Press, 108-121.

Schoeffler, Sidney, Robert D. Buzzell and Donald F. Heany (1974), "Impact of Strategic Planning on Profit Performance," Harvard Business Review, 52 (March-April), 137-145.

Schoenberg, Ronald (1982), MILS- A Computer Program to Estimate the Parameters of Multiple Indicator Linear Structural Models, National Institutes of Health, Bethesda, MD 20205.

Schuessler, Karl (1973), "Ratio Variables and Path Models," in Structural Equation Models in the Social Sciences, A. S. Goldberger and O. D. Duncan (Eds.), N.Y: Seminar Press, 201-228.

Schuessler, Karl (1975), "Analysis of Ratio Variables: Opportunities and Pitfalls," American Journal of Sociology, 80 2, 379-396.

Schultz, Randall L. (1971), "Market Measurement and Planning With a Simultaneous-Equation Model," Journal of Marketing Research, 13 (May), 153-164.

Schutz, Alfred (1953), "Common Sense and Scientific Interpretation of Human Action," Philosophy and Phenemenological Research, 16 (September), 3-36.

Schwartz, George (1963), Development of Marketing Theory, Cincinnati, OH: South Western Publishing Co.

Schwartzman, David (1971), The Decline of Service In Retail Trade, Pullman, Washington: Bureau of Economic and Business Research, Washington State University.

Secrist, Horace (1933), The Triumph of Mediocrity, Chicago: Northwestern University Bureau of Business Research.

Seelye, Alfred L. (1947), "The Importance of Economic Theory in Marketing Courses," Journal of Marketing, 11 (January), 223-227.

Sevin, Charles H. (1965), Marketing Productivity Analysis, N.Y: McGraw Hill Book Co.

Shapere, Dudley (1964), "The Structure of Scientific Revolutions," Philosophical Review, 73, 383-394.

Sharma, Subbash, Richard M. Durand and Oded Gur-Arie (1981), "Identification and Analysis of Moderator Variables," Journal of Marketing Research, 18 (August), 291-300.

Shepard, Geoffrey (1955), "The Analytical Problem Approach to Marketing," Journal of Marketing, 20 (October), 173-177.

Sheth, Howard (1983), "An Integrative Theory of Patronage Preference and Behavior," in Patronage Behavior and Retail Management, William R. Darden and Robert F. Lusch (Eds.), N.Y: North Holland, 9-28.

Sheth, Howard and David M. Gardner (1982), "History of Marketing Thought: An Update," in Marketing Theory: Philosophy of Science Perspectives, R. F. Bush and S. D. Hunt (Eds.), Chicago: American Marketing Association, 52-58.

Shonkwiller, Larry R. (1974), Consumer Attitudes Toward Food Selection and Perception of Store Conduct: Implications for Market Performance, Unpublished Dissertation, The Ohio State University.

Shubik, Martin (1959), Strategy and Market Structure, N.Y: John Wiley and Sons, Inc.

Silberberg, Eugene (1978), The Structure of Economics, N.Y: McGraw Hill.

Simon, Herbert A. (1959), "Theories of Decision Making in Economic and Behavioral Sciences," American Economic Review, 49 (June), 553-583.

Simon, Herbert A. (1962), "New Developments in The Theory Of The Firm," American Economic Association Paper and Proceedings, (May).

Simon, L. S. and N. Freimer (1970), Analytical Marketing, N.Y: Harcourt, Brace and World.

Smith, Charles W. (1953), "Increasing Distribution Efficiency by Better Organized Research," Journal of Marketing, 17 (January), 233-245.

Soldiver, Helmut (1976), "Conceptual Models For Retail Strategy Formulation," Journal of Retailing, 52 (Fall), 47-56, 96.

Stach, Stanley F. (1969), "Systems Analysis for Controlling and Improving Marketing Performance," Journal of Marketing, 33 (April), 12-19.

Stanley, Thomas J. and Murphy A. Sewall (1976), "Image Inputs to a Probabilistic Model: Predicting Retail Potential," Journal of Marketing, 40 (July), 48-53.

Stanley, Thomas J. and Murphy A. Sewall (1978), "Predicting Supermarket Trade: Implications for Marketing Management," Journal of Retailing, 54 (Summer), 13-22, 91-92.

Stern, Louis W. and John R. Grabner (1970), Competition in the Marketplace, Glenview, IL: Scott, Foresman and Co.

Stern, Louis W. and Torger Reve (1980), "Distribution Channels As Political Economies: A Framework for Comparative Analysis," Journal of Marketing, 44 (Summer), 52-64.

Stern, Louis W. and A. El-Ansary (1982), Marketing Channels, 2nd. Ed., Englewood Cliffs, N.J: Prentice Hall.

Stigler, George J. (1956), Trends in Employment in the Service Industries, Princeton University Press for NBER.

Stigler, George J. (1957), 'Perfect Competition, Historically Contemplated," Journal of Political Economy, (February), 1-17.

Strohkarck, Frank and Katherine Phelps (1950), "Mechanics of Constructing a City Market Map," Journal of Marketing, 15 (July), 61-64.

Stewart P. W., J. F. Dewherst and L. Field (1939), Does Distribution Cost Too Much?" N.Y: The Twentieth Century Fund.

Thanheiser, Heinz T. (1972), Strategy and Structure of German Enterprise, Unpublished Ph.D Dissertation, Harvard Business School.

Takeuchi, Hirotaka (1977), Productivity Analysis As A Resource Management Tool in Retail Trade, Unpublished Ph.D Dissertation, University of California, Berkeley.

Takeuchi, Hirotaka and Louis P. Bucklin (1977), "Productivity in Retailing: Retail Structure and Public Policy," Journal of Retailing, 53 (Spring), 35-46, 94-95.

Thompson, Donald L. (1964), Analysis of Retail Potential in Metropolitan Areas, Institute of Business and Economic Research, University of California, Berkeley.

Thompson, Donald L. (1967), "Consumer Convenience and Retail Area Structure," Journal of Marketing Research, 4 (February), 37-44.

Tigert, Douglas J. (1983), "Pushing the Hot Buttons for a Successful Retailing Strategy," in Patronage Behavior and Retail Management, W. R. Darden and R. F. Lusch (Eds.), N.Y: North-Holland, 89-113.

Tigert, Douglas J. and Sylvia Ma (1979), "In Search of a Supermarket Strategy: Albertson's Drives on Tampa-St. Petersburg," in Attitude Research Under The Sun, John Eighmey (Ed.), Chicago: American Marketing Association.

Tilley R. P. R. and R. Hicks (1970), "Economies of Scale in Supermarkets," Journal of Industrial Economics, 19 (November), 1-5.

Tucker, K. A. (1975), Economies of Scale in Retailing: An Empirical Study of Plant Size and Cost Structure, Westmead, England: Saxon House.

University of Illinois Bulletin (1960), Productivity in Marketing- Its Measurement and Change, Volume 58, (August).

Vaile, Roland S. (1949a), "Productivity in Distribution," Journal of Marketing, 13 (January), 385-386.

Vaile, Roland S. (1949b), "Towards A Theory Of Marketing--A Comment," Journal of Marketing, 13 (April), 520-522.

Vaile, Roland S. (1956), "Efficiency in Distribution," Journal of Marketing, 20 (April), 410-411.

Vaile, Roland S., E. T. Grether and R. Cox (1952), Marketing in the American Economy, N.Y: Ronald Press.

Vernon, John M. (1972), Market Structure and Industrial Performance, Boston: Allyn and Bacon, Inc.

Vernon, John M. and Robert E. M. Nourse (1972), "Profitability and Market Structure: An Analysis of Major Manufacturers of Non-Durable Consumer Products," Working Paper, Marketing Science Institute.

Wait, Donald J. (1980), "Productivity Measurement: A Management Accounting Challenge," Management Accounting, 62 (May), 24-30.

Walker, Forest Q. (1953), "The nature of Distribution Cost Problem," Journal of Marketing, 11 (October), 151-168.

Weiss, Leonard W. (1971), "Quantitative Studies of Industrial Organization," in Frontiers of Quantitative Economics, Michael D. Intriligator (Ed.), Amserdam: North Holland, 363-411.

Weiss, Leonard W. (1974), "The Concentration-Profits Relationship and Antitrust," in Industrial Concentration: The New Learning, Harvey J. Goldschmid, et al (Eds.), Boston: Little, Brown and Company.

Weld, Louis D. H. (1917), "Marketing Functions and Mercantile Organization," American Economic Review, (June), 306-318.

Werts, Charles E., Karl G. Joreskog and Robert L. Linn (1978), "Identification and Estimation in Path Analysis with Unmeasured Variables," American Journal of Sociology, 78 No:6, 1469-1485.

Werts, Charles E. and R. L. Linn (1970), "Path Analysis: Psychological Examples," Psychological Bulletin, 74, 193-212.

White, Lawrence J. (1976), "The Technology of Retailing: Some Results For Department Stores," in Studies in Non-Linear Estimation, S. Goldfeld and R. Quandt (Eds.), N.Y: Ballinger, 127-139.

White, L. A. and J. B. Ellis (1971), "A System Construct for Evaluating Retail Market Locations," Journal of Marketing Research, 8 (February), 43-46.

White, Phillip D. and Charles C. Slater (Eds.), (1978), Macro-Marketing: Distribution Processes from a Societal Perspective, An Elaboration of Issues, Boulder, Colorado: Business Research Division.

White, Phillip D. (1979), "Macro-Marketing versus Micro-Marketing: Level of Aggregation As A Sufficient Definitional Criteria," in 1979 American Marketing Association Fall Educators' Conference Proceedings, Chicago: American Marketing Association, 619-623.

Wickern, Joseph (1966), "Store Space Allocation and Labor Costs in Theory and Practice," Journal of Retailing, (Spring), 36-43, 63.

Wildsmith, J. R. (1973), Managerial Theories of the Firm, N.Y: Dunelles Co., Inc.

Williamson, Oliver E. (1967), The Economics of Discretionary Behavior, Chicago: Markham.

Williamson, Oliver E. (1970), Corporate Control and Business Behavior, Englewood Cliff, N.J: Prentice Hall.

Williamson, Oliver E. (1975), Markets and Hierarchies: Analysis and Antitrust Implications, N.Y: Free Press.

Wold, Herman (1980), "Model Construction and Evaluation When Theoretical Knowledge is Scarce," in Evaluation of Econometric Models, Academic Press, Inc., 47-76.

Wold Herman and Karl G. Joreskog (Eds.), (1982), Systems Under Indirect Observation- Causality * Structure * Prediction, Part II, N.Y.: North-Holland Publishing Co.

Wrigley, Leonard (1970), Divisional Autonomy and Diversification, Unpublished Ph.D Dissertation, Harvard Business School.

Zaltman, Gerald, Christian R. A. Pinson and Reinard Angelmar (1964), Metatheory and Consumer Research, N.Y: Holt, Rinehart and Winston, Inc.

Zaltman, Gerald, Karen LeMasters and Michael Heffring (1982), Theory Construction in Marketing, N.Y: John Wiley and Sons.

Appendix A

THE CORRELATIONS AMONG ALL THE MANIFEST VARIABLES

	ROCA	NPBT	NSTSA	NSTFE	NSTIN	MGREFF
ROCA	1.000					
NPBT	0.866	1.000				
NSTSA	0.805	0.697	1.000			
NSTFE	0.712	0.611	0.670	1.000		
NSTIN	0.897	0.662	0.759	0.673	1.000	
MGREFF	0.457	0.481	0.394	0.421	0.427	1.000
MGRSKL	0.320	0.383	0.397	0.376	0.378	0.771
MGRACH	0.452	0.466	0.333	0.389	0.390	0.765
MGRSAT	0.487	0.484	0.328	0.426	0.440	0.862
MGRAGE	0.306	0.283	0.272	0.156	0.221	0.098
MGRRTL	0.255	0.233	0.242	0.176	0.250	0.202
SERVC	0.141	0.150	0.106	0.148	0.097	0.078
OFFER	0.199	0.207	0.116	0.175	0.164	0.093
ATMOS	0.124	0.162	0.193	0.200	0.183	0.158
LOCAT	0.106	0.144	0.150	0.164	0.169	0.042
CSTCS	-0.147	-0.137	-0.152	-0.222	-0.133	-0.165
MINORS	0.357	0.260	0.284	0.244	0.250	0.257
CHLD14	0.201	0.057	0.197	0.214	0.272	0.154
INC14M	0.322	0.330	0.241	0.122	0.332	0.142
SPCPHH	-0.046	-0.029	-0.025	-0.003	-0.087	-0.099
DDSTRS	-0.237	-0.196	-0.171	-0.115	-0.231	-0.102
INTCPT1	-0.178	-0.116	-0.119	-0.091	-0.134	-0.007
INTCPT2	-0.139	-0.127	-0.083	-0.060	-0.101	-0.030
INTENCO	-0.164	-0.122	-0.146	-0.135	-0.150	-0.080
AVGINC	-0.284	-0.279	-0.164	-0.110	-0.262	-0.066
AVGHSV	-0.276	-0.261	-0.168	-0.164	-0.251	-0.106
AVGRTV	-0.315	-0.333	-0.184	-0.141	-0.248	-0.116
TINCHH	-0.077	-0.067	-0.049	-0.106	0.034	0.057
THSNVA	-0.086	-0.074	-0.052	-0.109	0.015	0.049
TRNTVA	-0.093	-0.076	-0.060	-0.135	-0.010	-0.055
TINCGP	-0.086	-0.188	-0.040	-0.052	-0.046	-0.030
TINCGH	-0.148	-0.225	-0.111	-0.022	-0.139	-0.038
POPG	-0.182	-0.217	-0.123	-0.027	-0.178	-0.022
HHSG	-0.219	-0.266	-0.160	-0.054	-0.200	-0.053

	MGRSKL	MGRACH	MGRSAT	MGRAGE	MGRRTL	SERVC
MGRSKL	1.000					
MGRACH	0.659	1.000				
MGRSAT	0.736	0.740	1.000			
MGRAGE	0.114	0.188	0.216	1.000		
MGRRTL	0.193	0.187	0.283	0.626	1.000	
SERVC	0.066	0.073	0.068	0.076	0.051	1.000
OFFER	0.067	0.063	0.088	0.044	0.008	0.729
ATMOS	0.095	0.071	0.092	0.022	0.037	0.643
LOCAT	0.032	0.048	0.074	0.037	0.043	0.395
CSTCS	-0.135	-0.144	-0.150	-0.109	-0.120	-0.498
MINORS	0.162	0.168	0.212	0.053	0.059	-0.061

CHLD14	0.170	0.154	0.192	0.029	0.019	-0.151
INC14M	0.052	0.164	0.098	0.117	0.020	0.137
SPCPHH	-0.101	-0.085	-0.054	0.067	-0.002	-0.108
DDSTRS	-0.112	-0.095	-0.074	-0.029	0.053	-0.323
INTCPT1	-0.070	-0.051	-0.045	-0.086	0.074	-0.319
INTCPT2	-0.097	-0.030	-0.037	-0.089	0.081	-0.360
INTENCO	-0.044	-0.106	-0.135	0.017	0.070	-0.377
AVGINC	-0.014	-0.155	-0.066	-0.146	0.031	-0.158
AVGHSV	-0.034	-0.110	-0.121	-0.169	-0.064	-0.136
AVGRTV	-0.055	-0.140	-0.110	-0.219	-0.009	-0.212
TINCHH	0.076	0.001	-0.036	-0.159	0.093	-0.231
THSNVA	0.083	0.006	-0.027	-0.162	0.042	-0.197
TRNTVA	-0.005	-0.021	-0.116	-0.157	0.039	-0.178
TINCGP	-0.026	-0.024	-0.039	-0.008	0.031	-0.163
TINCGH	-0.072	-0.070	-0.020	-0.032	-0.005	-0.116
POPG	-0.037	-0.071	-0.016	-0.064	-0.034	-0.090
HHSG	-0.065	-0.094	-0.052	-0.091	-0.028	-0.103

	OFFER	ATMOS	LOCAT	CSTCS	MINORS	CHLD14
OFFER	1.000					
ATMOS	0.590	1.000				
LOCAT	0.306	0.372	1.000			
CSTCS	-0.543	-0.437	-0.224	1.000		
MINORS	-0.137	-0.053	-0.094	-0.017	1.000	
CHLD14	-0.174	-0.121	-0.132	0.034	0.594	1.000
INC14M	0.135	0.033	0.014	-0.173	0.569	0.235
SPCPHH	-0.078	-0.070	-0.048	0.089	-0.186	0.141
DDSTRS	-0.383	-0.185	-0.070	0.422	-0.155	-0.001
INTCPT1	-0.416	-0.182	-0.159	0.339	-0.106	-0.003
INTCPT2	-0.434	-0.223	-0.141	0.453	-0.081	-0.016
INTENCO	-0.506	-0.269	-0.205	0.259	0.031	-0.008
AVGINC	-0.162	-0.038	-0.034	0.182	-0.446	-0.086
AVGHSV	-0.098	-0.033	-0.057	0.056	-0.403	-0.304
AVGRTV	-0.222	-0.094	-0.077	0.217	-0.377	-0.105
TINCHH	-0.280	-0.148	-0.133	0.218	0.204	-0.215
THSNVA	-0.221	-0.072	-0.106	0.160	0.078	-0.259
TRNTVA	-0.189	-0.161	-0.116	0.139	0.085	-0.403
TINCGP	-0.217	-0.131	-0.061	0.105	0.103	0.479
TINCGH	-0.152	-0.082	-0.014	0.050	-0.131	0.334
POPG	-0.102	-0.047	-0.034	0.051	-0.244	0.244
HHSG	-0.126	-0.040	-0.029	0.048	-0.267	0.218

	INC14M	SPCPHH	DDSTRS	INTCPT1	INTCPT2	INTENCO
INC14M	1.000					
SPCPHH	-0.368	1.000				
DDSTRS	-0.286	0.305	1.000			
INTCPT1	-0.222	0.249	0.780	1.000		
INTCPT2	-0.293	0.318	0.825	0.868	1.000	
INTENCO	-0.108	-0.003	0.359	0.448	0.413	1.000
AVGINC	-0.890	0.275	0.251	0.277	0.309	0.177

AVGHSV	-0.647	0.231	0.284	0.283	0.250	0.165
AVGRTV	-0.781	0.240	0.240	0.303	0.334	0.233
TINCHH	0.079	-0.382	0.275	0.377	0.315	0.413
THSNVA	-0.080	-0.320	0.194	0.325	0.257	0.360
TRNTVA	0.161	-0.318	0.191	0.255	0.197	0.280
TINCGP	-0.500	0.346	0.152	0.141	0.137	0.107
TINCGH	-0.627	0.370	0.152	0.106	0.108	0.067
POPG	-0.690	0.387	0.121	0.102	0.090	0.045
HHSG	-0.710	0.364	0.152	0.143	0.126	0.091

	AVGINC	AVGHSV	AVGRTV	TINCHH	THSNVA	TRNTVA
AVGINC	1.000					
AVGHSV	0.777	1.000				
AVGRTV	0.868	0.777	1.000			
TINCHH	0.164	0.313	0.310	1.000		
THSNVA	0.288	0.540	0.425	0.909	1.000	
TRNTVA	0.155	0.369	0.272	0.881	0.886	1.000
TINCGP	0.529	0.277	0.519	-0.066	-0.084	-0.166
TINCGH	0.632	0.381	0.560	-0.164	-0.135	-0.234
POPG	0.707	0.506	0.654	-0.148	-0.049	-0.215
HHSG	0.730	0.543	0.692	-0.089	-0.002	-0.157

	TINCGP	TINCGH	POPG	HHSG
TINCGP	1.000			
TINCGH	0.940	1.000		
POPG	0.869	0.938	1.000	
HHSG	0.856	0.942	0.982	1.000

Appendix B

THE VARIANCES AND COVARIANCES AMONG ALL THE MANIFEST VARIABLES

	ROCA	NPBT	NSTSA	NSTFE	NSTIN
ROCA	807.981				
NPBT	158.601	41.512			
NSTSA	539.492	105.879	555.875		
NSTFE	256.504	49.893	200.206	160.630	
NSTIN	38.450	6.432	26.986	12.863	2.274
MGREFF	54.182	12.926	38.746	22.255	2.686
MGRSKL	38.603	10.473	39.724	20.224	2.419
MGRACH	48.617	11.361	29.709	18.656	2.225
MGRSAT	120.185	27.074	67.140	46.875	5.761
MGRYRS	45.473	9.533	33.527	10.337	1.742
MGRRTL	70.483	14.598	55.482	21.691	3.666
SERVC	18.749	4.521	11.691	8.775	0.684
OFFER	39.370	9.283	19.035	15.437	1.721
ATMOS	19.513	5.778	25.191	14.033	1.528
LOCAT	8.328	2.564	9.775	5.745	0.704
CSTCS	-13.768	-2.908	-11.808	-9.271	-0.661
MINORS	302.392	49.919	199.530	92.152	11.234
CHLD14	32.886	2.114	26.735	15.612	2.361
INC14M	85.890	19.952	53.320	14.510	4.698
SPCPHH	-14.064	-2.010	-6.340	-0.409	-1.411
DDSTRS	-10.981	-2.058	-6.572	-2.376	-0.568
INTCPT1	-13.732	-2.028	-7.615	-3.130	-0.548
INTCPT2	-54.394	-11.265	-26.941	-10.469	-2.097
INTENCO	-27.038	-4.559	-19.965	-9.924	-1.312
AVGINC	-45.296	-10.086	-21.696	-7.823	-2.217
AVGHSV	-128.600	-27.565	-64.928	-34.071	-6.205
AVGRTV	-53.947	-12.927	-26.137	-10.767	-2.253
TINCHH	-23.857	-4.705	-12.592	-14.644	0.559
THSNVA	-25.030	-4.882	-12.553	-14.145	0.232
TRNTVA	-135.782	-25.151	-72.661	-87.883	-0.775
TINCGP	-14.220	-7.046	-5.486	-3.834	-0.404
TINCGH	-22.149	-7.633	-13.779	-1.468	-1.104
POPG	-21.868	-5.910	-12.258	-1.446	-1.135
HHSG	-27.054	-7.448	-16.395	-2.974	-1.311

	MGRSKL	MGRACH	MGRSAT	MGRYRS	MGRRTL
MGRSKL	18.012				
MGRACH	10.583	14.319			
MGRSAT	27.119	24.311	75.377		
MGRYRS	2.529	3.719	9.804	27.332	
MGRRTL	7.965	6.881	23.892	31.824	94.556
SERVC	1.310	1.292	2.762	1.859	2.320
OFFER	1.979	1.659	5.318	1.601	0.541
ATMOS	2.232	1.487	4.422	0.637	1.992
LOCAT	0.375	0.502	1.776	0.535	1.156
CSTCS	-1.888	-1.795	-4.291	-1.878	-3.845

MINORS	20.488	18.944	54.848	8.257	17.096
CHLD14	4.153	3.354	9.595	0.873	1.063
INC14M	2.071	5.823	7.984	5.740	1.825
SPCPHH	-4.610	-3.460	-5.043	3.768	-0.209
DDSTRS	-0.775	-0.586	-1.047	-0.247	0.840
INTCPT1	-0.806	-0.524	-1.060	-1.220	1.953
INTCPT2	-5.667	-1.563	-4.422	-6.406	10.843
INTENCO	-1.083	-2.326	-6.798	0.515	3.948
AVGINC	-0.333	-3.291	-3.215	-4.283	1.691
AVGHSV	-2.365	-6.823	-17.220	-14.483	-10.201
AVGRTV	-1.406	-3.192	-5.754	-6.898	-0.527
TINCHH	3.516	0.041	-3.407	-9.061	9.857
THSNVA	3.607	0.232	-2.400	-8.672	4.182
TRNTVA	-1.090	-4.082	-51.729	-42.159	19.479
TINCGP	-0.642	-0.528	-1.970	-0.243	1.753
TINCGH	-1.609	-1.395	-0.914	-0.881	-0.256
POPG	-0.664	-1.136	-0.587	-1.414	-1.398
HHSG	-1.199	-1.546	-1.962	-2.068	-1.183

	OFFER	ATMOS	LOCAT	CSTCS	MINORS
OFFER	48.442				
ATMOS	22.733	30.647			
LOCAT	5.887	5.692	7.640		
CSTCS	-12.453	-7.971	-2.040	10.857	
MINORS	-28.414	-8.743	-7.742	-1.669	887.980
CHLD14	-6.971	-3.856	-2.100	0.645	101.885
INC14M	8.817	1.714	0.363	-5.349	159.112
SPCPHH	-5.839	-4.168	-1.427	3.154	-59.616
DDSTRS	-4.345	-1.669	-0.315	2.266	-7.529
INTCPT1	-7.858	-2.734	-1.193	3.032	-8.573
INTCPT2	-41.585	-16.996	-5.365	20.549	-33.230
INTENCO	-20.426	-8.637	-3.286	4.950	5.358
AVGINC	-6.327	-1.180	-0.527	3.365	-74.572
AVGHSV	-11.181	-2.995	-2.583	3.025	-196.851
AVGRTV	-9.309	-3.135	-1.282	4.308	-67.686
TINCHH	-21.242	-8.931	-4.007	7.830	66.261
THSNVA	-15.749	-4.081	-3.000	5.398	23.799
TRNTVA	-67.566	-45.781	-16.469	23.525	130.101
TINCGP	-8.786	-4.219	-0.981	2.013	17.854
TINCGH	-5.570	-2.390	-0.204	0.867	-20.553
POPG	-3.001	-1.100	-0.397	0.710	-30.734
HHSG	-3.811	-0.962	-0.348	0.687	-34.578

	INC14M	SPCPHH	DDSTRS	INTCPT1	INTCPT2
INC14M	88.059				
SPCPHH	-37.144	115.692			
DDSTRS	-4.375	5.347	2.657		
INTCPT1	-5.654	7.269	3.451	7.366	
INTCPT2	-37.853	47.089	18.513	32.432	189.530
INTENCO	-5.878	-0.187	3.394	7.052	32.977

AVGINC	-46.862	16.597	2.296	4.218	23.869
AVGHSV	-99.523	40.728	7.588	12.590	56.417
AVGRTV	-44.157	15.553	2.357	4.955	27.704
TINCHH	8.081	-44.786	4.886	11.153	47.269
THSNVA	-7.687	-35.242	3.238	9.031	36.227
TRNTVA	77.602	-175.686	15.991	35.547	139.304
TINCGP	-27.293	21.648	1.441	2.226	10.971
TINCGH	-30.978	20.953	1.304	1.515	7.828
POPG	-27.370	17.595	0.834	1.170	5.237
HHSG	-28.956	17.015	1.077	1.687	7.539

	AVGINC	AVGHSV	AVGRTV	TINCHH	THSNVA
AVGINC	31.483				
AVGHSV	71.465	268.698			
AVGRTV	29.344	76.738	36.301		
TINCHH	10.030	55.925	20.358	118.810	
THSNVA	16.546	90.632	26.218	101.449	104.837
TRNTVA	44.672	310.683	84.175	493.243	465.962
TINCGP	17.266	26.413	18.190	-4.185	-5.003
TINCGH	18.670	32.882	17.764	-9.412	-7.278
POPG	16.768	35.060	16.656	-6.819	-2.121
HHSG	17.801	38.683	18.120	-4.216	-0.089

	TINCGP	TINCGH	POPG	HHSG
TINCGP	33.837			
TINCGH	28.789	27.720		
POPG	21.367	20.875	17.868	
HHSG	21.640	21.555	18.040	18.888

Appendix C

THE RESEARCH INSTRUMENTS USED IN THE STUDY

STORES, INCORPORATED
SURVEY OF STORE OPERATIONS
SPECIAL INSTRUCTIONS

Please provide us with data for all the items on the SURVEY OF STORE OPERATIONS DATA FORM. If you have any questions about any items please call: Robert F. Lusch or Ray Serpkenci at (405) 325-3561.

It should be noted that there are several pages at the end of the questionnaire that you may use to explain why a data element may be missing or why it takes on an "unusual" value. For instance if sales dropped substantially in a particular month (due to a fire for example) then you should make note of this.

Our ability to produce meaningful analysis is directly related to the quality of the data you provide. Therefore please take care in completing the SURVEY OF STORE OPERATIONS DATA FORM. Pay particular attention to the following:

QUESTION A.7, Other Operating Expenditures. The only operating expenses we need are rent, advertising and corporate overhead. We recognize that the procedures and/or the amount of corporate overhead allocated to stores has changed over the last couple of years. By obtaining the corporate overhead expenses we can add it to net profit to get a cleaner profit figure.

QUESTION A.8, Net Profit. Please provide a dollar figure before income taxes but before any assignment of corporate overhead to each store.

QUESTION B.2, Gross Book Value of Fixtures and Equipment. Please provide an end-of-year dollar figure before accumulated depreciation and/or amortization.

QUESTION B.3, Net Book Value of Fixtures and Equipment. Please provide an end-of-year dollar figure after accumulated depreciation and/or amortization.

QUESTION B.4, Replacement Value of Fixtures and Equipment. Estimate how much it would have cost at year end 1981 to replace all fixtures and equipment in the store. Assume that you would replace with the identical or similar fixtures and equipment.

QUESTION CI.2, Major Remodeling. We define a major remodeling as replacing at least 50% of all the fixtures and equipment in the store. Or redesigning at least 50% of the exterior of the store.

QUESTION CI.3, Remodeling Expenditures. Please provide either the actual cost or an estimate of the actual cost of the last major remodeling.

QUESTION CIII.1, Number of Full-Time Employees. What is the average number of full-time employees (including managers). You may compute this by taking the number of full-time employees at the beginning of each month and obtaining an average for the year.

QUESTION C.III.2, Number of Part-Time Employees. What is the average number of part-time employees. You may compute this by taking the number of part-time employees at the beginning of each month and obtaining an average for the year.

QUESTION CIV.1, Hours of Operation. We need to know the typical store hours for each day of the week for 1979, 1980 and 1981. If there was any change during a particular year, please give us the store hours that occurred most frequently during the year.

STORES, INCORPORATED

SURVEY OF STORE OPERATIONS
DATA FORM

CONFIDENTIAL

Store Number : #_____

Store Address : _____
(address) (city) (state)

A. FINANCIAL STATISTICS-- Revenues and Expenditures

1. Net Sales (Revenues)
(Total revenues from merchandise sold, net of returns and allowances. Please enter in nearest dollars)

	1978	1979	1980	1981
January				
February				
March				
April				
May				
June				
July				
August				
September				
October				
November				
December				
TOTAL	$	$	$	$

	1979	1980	1981
2. Target Gross Profit for the Year:	%	%	%
3. Realized Gross Profit for the Year:	%	%	%

4. Hourly Employee Payroll
(Wages paid to all non-salaried employees, excluding payroll taxes and employee benefits)

January			
February			
March			
April			
May			
June			
July			
August			
September			
October			
November			
December			
TOTAL	$	$	$

5. Salaried Employee Payroll
(Salaries paid to all non-hourly employees, excluding payroll taxes and employee benefits)

TOTAL	$	$	$

	1978	1979	1980	1981
6. Other Operating Expenditures (in nearest dollars)				
a. Rent				
b. Advertising				
c. Corporate Overhead				
TOTAL		$	$	$
7. Net Profit (Before Tax)		$	$	$

B. FINANCIAL STATISTICS– Assets and Investments

1. End of Year Inventory	$	$	$	$
2. Estimated Replacement Value of Fixtures and Equipment				$

C. OPERATING STATISTICS

I. AGE OF STORE

1. Date Store First Opened _____ (month) _____ (year)

2. Date of Last Major Remodeling (if any) _____ (month) _____ (year)

3. Remodeling Expenditures $

II. SIZE OF STORE

	1979	1980	1981
1. Total Sq. Ft. of Space for the store	_____	_____	_____
2. Total Sq. Ft. of Selling Space for the store	_____	_____	_____
3. If there has been an increase in store space, please provide an estimate of the expansion cost per sq. ft.	_____	_____	_____
4. Number of Check-out Counters	_____	_____	_____
5. Number of Parking Spaces			
a. Street Parking	_____	_____	_____
b. Lot Parking	_____	_____	_____

III. EMPLOYEE PROFILE

1. Number of Full-Time Employees	_____	_____	_____
2. Number of Part-Time Employees	_____	_____	_____
TOTAL			
3. Average Hourly Wage Rate per Hourly Employee (Excluding payroll taxes and employee benefits)	$_____	$_____	$_____

IV. STORE OPERATIONS

1. Hours of Operation for this store (Hours per day)

	1979	1980	1981
Monday			
Tuesday			
Wednesday			
Thursday			
Friday			
Saturday			
Sunday			
Total Hours per Week			

2. Merchandise Lines Carried in 1981 (Please Circle the appropriate response)

a. Auto Accessories and Parts	yes	no
b. Sporting Goods	yes	no
c. Appliances (excluding small appliances.)	yes	no

D. Please indicate in the spaces provided below any comments you may have regarding the data you provided to us in prior pages. These comments should pertain to any unusual trend, abnormality or dis-continuity in the operations of the store or any other material facts that could help us in evaluating the data.

DATA FORM PAGE NO.	RELEVANT FIGURES	COMMENTS

Thank You.

Dear Store Manager:

[redacted] is in the process of conducting a major market research study. This study will help us identify the customers we serve and the competition we face in each market. As you might expect, this information will help you better operate your store for improved profitability. I hope I can count on your assistance in this research effort.

Enclosed is a questionnaire entitled, "COMPETITIVE AUDIT DATA FORM". Predictably, this questionnaire may take a fair amount of time to complete. In fact, it would not be unusual if it took an entire day of your time. I would like you to take the necessary time to fill it out as accurately and completely as possible. If you do not have the precise answer to some of the questions, please use your best judgment or estimate.

Before you begin to answer the questions in the Competitive Audit Data Form, please take a few minutes to acquaint yourself with its contents and the accompanying "special instructions." In completing the questions you will find it necessary to drive the trade area of your store. This will not only insure that you provide us with more accurate information but also will allow you to inspect and examine who and where your competition is.

Best of luck on this important project, and if you have any questions please feel free to call me at [redacted] Please return the completed questionnaire to your District Supervisor by April 28.

Cordially,

[redacted]

SPECIAL INSTRUCTIONS FOR COMPLETING COMPETITIVE AUDIT DATA FORM

It is critical that the Competitive Audit Data Form be accurately and completely filled out. Please take the time to do a good job. You should pay particular attention to the following instructions.

A. Please note for purposes of this survey that your store has been classified as either an SMSA store, or a Non-SMSA store (see cover page of questionnaire). It is important for you to keep in mind how your store is classified since some of the questions in the survey apply only to SMSA stores and some only to Non-SMSA stores.

B. Please note on page-1 of the survey (question-1) that your store's trading area has already been defined for you. It is important that you keep this trade area definition in mind when answering all of question-1.

C. In question-1 we are asking that you provide us with the approximate gross leasable space of all competitors in your trade area. By gross leasable space we mean the total square feet of selling and nonselling space. Please also note that the size categories that we provide you with change for different lines of retail trade--when filling out the survey please keep this in mind.

D. Also in question-1 we ask that you estimate the driving distance from your store to each competitor's store. This driving distance should be via the shortest route between your store and a competitor's store. Please provide this estimate to the nearest 1/4 of a mile.

E. In question-1 we have indicated the names of several key retailers that may be currently present in your trade area, AND LEFT SPACES FOR YOU TO ENTER OTHERS. If there are other competitive retail establishments in your trading area whose names do not appear in question-1, please enter their names in the appropriate segments and circle the column that best approximates the gross leasable space (in square feet) for each.

F. Please make sure that each page of the survey has your store number in the upper right hand corner.

G. In question-2, which deals with retail establishments OUTSIDE YOUR DEFINED TRADE AREA, we are only interested in retail establishments that you feel are major competitors. BY MAJOR COMPETITOR we mean that you have direct knowledge (either from your customers, friends, family, etc.) that this competitor is taking a significant number of customers away from your store.

H. Please note the instructions for questions 3a and 3b. Question 3a should be completed ONLY IF your store has been classified as a Non-SMSA store.

I. Question-5 asks you to assess how your top competitor compares in relation to your store. Please enter the name of this top competitor in the space provided. This will allow you to keep this top competitor in mind when you respond to the various items in question-5.

J. On the last page of the survey, section-B should only be completed if your store is classified as an SMSA-store. On the other hand, section-C should be completed only if your store is classified as a Non-SMSA store.

THANK YOU FOR YOUR PATIENCE.

Store Number: ☐☐☐

COMPETITIVE AUDIT DATA FORM

Store Number:_____

Store Address: _____
(address) (city) (state)

The following survey is designed to provide us with a better understanding of the competitive environment in your trade area or township. Since the trade area boundaries are different depending on where the store is located, please follow the instructions carefully and answer only those questions that are relevant for this [redacted] Store.

For the purposes of this survey, your store is classified as:

- ☐ An SMSA Store
- ☐ A Non-SMSA Store

FOR INTERNAL USE ONLY

		DATA PROCESSING	
SMSA	☐	Edit	☐
Non-SMSA (Large Town/Radius)	☐	Code	☐
Non-SMSA (Small Town/City Limits)	☐	Keypunch	☐
County Seat	☐		

Edited By (Initials) ☐☐☐

Store Number: ☐☐☐

A. STRUCTURE OF COMPETITION (For both SMSA and non-SMSA Stores)

1. We have indicated below, the names of several key retailers that may be currently present in your trade area, and left spaces for you to enter others. If there are other competitive retail establishments in your trading area whose names do not appear below, please enter their names in the appropriate segments and circle the column that best approximates the gross leasable space (in sq. ft.) for each.

   For the purposes of this questionnaire, your trading area is defined as:

   ☐ Approximately Two (2) mile driving distance from this [redacted] Store

   ☐ City Limits Only

   ☐ City Limits and County

	Check If Present	Estimated Driving Distance (to the nearest ¼ of a mile)	Please circle the approximate gross leasable space (in sq. ft.) Less Than 10,000	10,000-20,000	20,000-40,000	40,000-60,000	60,000-80,000	If Over 80,000 Please Estimate
A. NATIONAL CHAINS								
SEARS								
Regular Store.....	☐	_____	1	2	3	4	5	_____
Catalog Store.....	☐	_____						
PENNEYS								
Regular Store.....	☐	_____	1	2	3	4	5	_____
Catalog Store.....	☐	_____						
WARDS								
Regular Store.....	☐	_____	1	2	3	4	5	_____
Catalog Store.....	☐	_____						
B. DISCOUNT DEPARTMENT STORES								
K-Mart	☐	_____	1	2	3	4	5	_____
Wal-Mart	☐	_____	1	2	3	4	5	_____
Gibson's.....	☐	_____	1	2	3	4	5	_____
Target.....	☐	_____	1	2	3	4	5	_____
Woolco.....	☐	_____	1	2	3	4	5	_____
T.G.&Y.....	☐	_____	1	2	3	4	5	_____
_____	☐	_____	1	2	3	4	5	_____
_____	☐	_____	1	2	3	4	5	_____
_____	☐	_____	1	2	3	4	5	_____
_____	☐	_____	1	2	3	4	5	_____

	Check If Present	Estimated Driving Distance (to the nearest ¼ of a mile)	Please circle the approximate gross leasable space (in sq. ft.) Under 5,000	5,000-10,000	10,000-15,000	15,000-20,000	20,000-25,000	If over 25,000 Please Estimate
C. VARIETY STORES								
Ben Franklin.....	☐	_____	1	2	3	4	5	_____
Woolworth.....	☐	_____	1	2	3	4	5	_____
McCory.....	☐	_____	1	2	3	4	5	_____
Sprouse Reitz.....	☐	_____	1	2	3	4	5	_____
	☐	_____	1	2	3	4	5	_____
_____	☐	_____	1	2	3	4	5	_____
_____	☐	_____	1	2	3	4	5	_____
_____	☐	_____	1	2	3	4	5	_____
_____	☐	_____	1	2	3	4	5	_____

Store Number: ☐☐☐

	Check If Present	Estimated Driving Distance (to the nearest ¼ of a mile)	Please circle the approximate gross leasable space (in sq. ft.) Under 5,000	5,000-10,000	10,000-15,000	15,000-20,000	20,000-25,000	If over 25,000 Please Estimate
D. DRUG STORES								
Eckerd's	☐		1	2	3	4	5	
Revco	☐		1	2	3	4	5	
Walgreen	☐		1	2	3	4	5	
Super-X	☐		1	2	3	4	5	
	☐		1	2	3	4	5	
	☐		1	2	3	4	5	
	☐		1	2	3	4	5	
	☐		1	2	3	4	5	
E. FAMILY CLOTHING STORES								
C.R. Anthony	☐		1	2	3	4	5	
Bealls	☐		1	2	3	4	5	
J.B. White	☐		1	2	3	4	5	
Weiners	☐		1	2	3	4	5	
	☐		1	2	3	4	5	
	☐		1	2	3	4	5	
	☐		1	2	3	4	5	
	☐		1	2	3	4	5	
F. FABRIC STORES								
Cloth World	☐		1	2	3	4	5	
Hancock Fabrics	☐		1	2	3	4	5	
	☐		1	2	3	4	5	
	☐		1	2	3	4	5	
	☐		1	2	3	4	5	
G. DOLLAR STORES								
Dollar General	☐		1	2	3	4	5	
Bill's Dollar	☐		1	2	3	4	5	
	☐		1	2	3	4	5	
	☐		1	2	3	4	5	
H. HARDWARE STORES								
True Value	☐		1	2	3	4	5	
ACE	☐		1	2	3	4	5	
Coast-To-Coast	☐		1	2	3	4	5	
	☐		1	2	3	4	5	
	☐		1	2	3	4	5	
	☐		1	2	3	4	5	
I. HOME & AUTO STORES								
Western Auto	☐		1	2	3	4	5	
Otasco	☐		1	2	3	4	5	
Whites	☐		1	2	3	4	5	
Yellow Front	☐		1	2	3	4	5	
	☐		1	2	3	4	5	
	☐		1	2	3	4	5	
	☐		1	2	3	4	5	

Store Number: ☐☐☐

	Check If Present	Estimated Driving Distance (to the nearest ¼ of a mile)	Please circle the approximate gross leasable space (in sq. ft.) Under 10,000	10,000-20,000	20,000-30,000	30,000-40,000	40,000-50,000	If over 50,000 Please Estimate
J. HOME CENTERS/LBM DEALERS								
Payless Cashways	☐	_____	1	2	3	4	5	_____
Handy Dan	☐	_____	1	2	3	4	5	_____
Alamo Enterprises	☐	_____	1	2	3	4	5	_____
Wickes	☐	_____	1	2	3	4	5	_____
Homers	☐	_____	1	2	3	4	5	_____
Pay N Pak	☐	_____	1	2	3	4	5	_____
Handyman	☐	_____	1	2	3	4	5	_____
_____	☐	_____	1	2	3	4	5	_____
_____	☐	_____	1	2	3	4	5	_____
_____	☐	_____	1	2	3	4	5	_____

	Check If Present	Estimated Driving Distance (to the nearest ¼ of a mile)	Please circle the approximate gross leasable space (in sq. ft.) Under 10,000	10,000-15,000	15,000-20,000	20,000-30,000	30,000-40,000	If Over 40,000 Please Estimate
K. SUPERMARKETS								
Safeway	☐	_____	1	2	3	4	5	_____
Kroger (Supermarkets)	☐	_____	1	2	3	4	5	_____
HEB	☐	_____	1	2	3	4	5	_____
Handy Andy	☐	_____	1	2	3	4	5	_____
Albertson's (Supermarkets)	☐	_____	1	2	3	4	5	_____
United	☐	_____	1	2	3	4	5	_____
Furrs	☐	_____	1	2	3	4	5	_____
Piggly Wiggly	☐	_____	1	2	3	4	5	_____
Minimax	☐	_____	1	2	3	4	5	_____
IGA	☐	_____	1	2	3	4	5	_____
_____	☐	_____	1	2	3	4	5	_____
_____	☐	_____	1	2	3	4	5	_____
_____	☐	_____	1	2	3	4	5	_____
_____	☐	_____	1	2	3	4	5	_____

	Check If Present	Estimated Driving Distance (to the nearest ¼ of a mile)	Please circle the approximate gross leasable space (in sq. ft.) 30,000-40,000	40,000-50,000	50,000-60,000	If Over 60,000 Please Estimate
L. COMBINATION STORES						
Skaggs	☐	_____	1	2	3	_____
Handy Dan	☐	_____	1	2	3	_____
Tom Thumb/Poge	☐	_____	1	2	3	_____
Albertson's (Super Store)	☐	_____	1	2	3	_____
Kroger (Family Centers)	☐	_____	1	2	3	_____
_____	☐	_____	1	2	3	_____
_____	☐	_____	1	2	3	_____
_____	☐	_____	1	2	3	_____

Store Number: ☐☐☐

	Check If Present	Estimated Driving Distance (to the nearest ¼ of a mile)	Estimated Gross Leasable Space (in sq. ft.)
M. CATALOG SHOWROOMS			
Best Products	☐		
H.J. Wilson	☐		
O.G. Wilson	☐		
Service Merchandise	☐		
	☐		
	☐		
N. OTHER SPECIALTY RETAILERS			
Radio Shack	☐		
Card Shops:			
Hallmark	☐		
	☐		
	☐		
Toy/Hobby Stores:			
Toys R Us	☐		
	☐		
	☐		
All Other Retailers:			
	☐		
	☐		
	☐		
	☐		
	☐		

2. After completing the first question, do you think there are other retail establishments outside of your trading area as we defined it, which you feel are major competitors to this [redacted] Store?

☐ No

☐ Yes. If Yes, please complete the following:

Name of Retailer	Type of Retailer (see categories in Question 1)	Estimated Driving Distance (to the nearest ½ of a mile)	Estimated Gross Leasable Space (in sq. ft.)

Store Number: ☐☐☐

3a. **(If SMSA Store, please answer this question, otherwise go to 3b).** Please indicate the **NUMBER** of competitive retail operations within your:

	Number of Stores
a. Primary Trading Area (2-mile driving distance)	
b. Secondary Trading Area (4-mile driving distance)	
c. Tertiary Trading Area (6-mile driving distance)	
Cumulative Total	

3b. **(If non-SMSA Store, please answer this question, otherwise go to the next question).** Please indicate the **NUMBER** of competitive retail operations in your:

	Number of Stores
a. Town or City limits	
b. County	

4. Think of the major competitors you've indicated in the first question. Which of them would you say are the **TOP THREE** Competitors to this [redacted] Store?

	Name of Retailer	Estimated Driving Distance To This Store (to the nearest ¼ of a mile)	Approximate Store Size (Gross Leasable Space) (in sq. ft.)
a. Number one competitor			
b. Number two competitor			
c. Number three competitor			

5. For each of the following characteristics, please circle the number that you believe best describes the **TOP COMPETITOR** (the store you indicated in 'a'-above), **IN RELATION TO THIS** [redacted] **store.**

Would You Say, _____ (enter competitor) has: Than This [redacted] Store?

better location	1	2	3	4	5	6	7	poorer location
higher 'everyday prices'	1	2	3	4	5	6	7	lower 'everyday prices'
smaller store	1	2	3	4	5	6	7	larger store
better qualified employees	1	2	3	4	5	6	7	less qualified employees
narrower selection	1	2	3	4	5	6	7	wider selection
better quality merchandise	1	2	3	4	5	6	7	poorer quality merchandise
less advertising	1	2	3	4	5	6	7	more advertising
poorer 'sale prices'	1	2	3	4	5	6	7	better 'sale prices'
higher prestige	1	2	3	4	5	6	7	lower prestige
lower paid employees	1	2	3	4	5	6	7	higher paid employees
better interior design	1	2	3	4	5	6	7	poorer interior design
more parking space	1	2	3	4	5	6	7	less parking space
poorer store fixtures	1	2	3	4	5	6	7	better store fixtures
better return policies	1	2	3	4	5	6	7	poorer return policies
poorer store atmosphere	1	2	3	4	5	6	7	better store atmosphere
better displays	1	2	3	4	5	6	7	poorer displays
less national brands	1	2	3	4	5	6	7	more national brands
better 'value for the money'	1	2	3	4	5	6	7	poorer 'value for the money'
better accesibility	1	2	3	4	5	6	7	poorer accessibility
less checkouts	1	2	3	4	5	6	7	more checkouts

Store Number: ☐☐☐

B. TRADE AREA ATTRACTIVENESS (For SMSA Stores Only)

The last few questions are about the trade area in general. Please provide us your assessment of the trade area for this [redacted] store. (Circle your responses)

1. Within a 2-mile driving distance from this [redacted] store, would you say now is a good time to open a [redacted] store?

Definitely Not	1	2	3	4	5	6	7	Definitely Yes

2. In general, how satisfied are you with the annual sales volume of this [redacted] store?

Very Satisfied	1	2	3	4	5	6	7	Very Dissatisfied

3. How would you describe the 'competition' that this store faces within:

a. 2-mile driving distance

Very Weak	1	2	3	4	5	6	7	Very Strong

b. 4-mile driving distance

Very Weak	1	2	3	4	5	6	7	Very Strong

c. 6-mile driving distance

Very Weak	1	2	3	4	5	6	7	Very Strong

4. How would you describe the overall economic conditions in this community?

Very Strong	1	2	3	4	5	6	7	Very Weak

C. TRADE AREA ATTRACTIVENESS (For Non-SMSA Stores Only)

The last few questions are about the trade area in general. Please provide us your candid assessment of the trade area for this [redacted] store. (Circle your responses)

1. In your **town or city**, would you say now is a good time to open a [redacted] store?

Definitely Not	1	2	3	4	5	6	7	Definitely Yes

2. In your **county**, would you say now is a good time to open a [redacted] store?

Definitely Not	1	2	3	4	5	6	7	Definitely Yes

3. How would you describe the 'competition that this store faces in this **town or city**?

Very Weak	1	2	3	4	5	6	7	Very Strong

4. How would you describe the overall economic conditions in this **town or city**?

Very Strong	1	2	3	4	5	6	7	Very Weak

5. How would you describe the overall economic conditions in this **county**?

Very Strong	1	2	3	4	5	6	7	Very Weak

6. In general, how satisfied are you with the annual sales volume of this [redacted] store?

Very Satisfied	1	2	3	4	5	6	7	Very Dissatisfied

Thank You Very Much For Your Cooperation!

Dear District Supervisor:

As you may have already heard, [redacted] is in the process of conducting a major research study on the customers we serve and the competition we face in each of our markets. As part of this research effort, we would also like to get an insight into the effectiveness of our store managers in order that we can initiate programs to help them perform even better in the future. For this purpose we have developed a two page Survey of Managerial Effectiveness questionnaire. It is our hope that this questionnaire will provide us with this insight into how our store managers perform on a variety of tasks and responsibilities.

Enclosed you will find a sufficient number of questionnaires for each of the stores that are currently under your supervision. We need to have each of these questionnaires completed for the person who was the store manager in each of these Winn's stores for fiscal 1981.

* If the present manager (in 1982) is not the same person who was the manager in 1981, please complete the questionnaire with the former manager in mind. That is, do not evaluate the current manager if he was not in tenure with the store in 1981.

* If the store in question did not have a single manager in fiscal 1981, that is, if there was more than one manager in this store in 1981, please evaluate the manager who had at least a 6 month tenure or longer in that store in 1981.

* If the store in question had no managers with a tenure of at least 6 months with that store in 1981, then please state this on the cover page of the questionnaire and do not fill out the survey for that store.

We are confident that you will provide us with your most candid evaluation of each store manager. Please do take the necessary care and give attention to reading and responding to each question, keeping in mind the strict confidentiality of this survey. The results of this research will only be useful if we receive accurately and completely filled questionnaires. Your cooperation in this important phase of our research is very much appreciated.

Please do not hesitate to call me at [redacted] if you have any questions or if I may be of any assistance.

Cordially,

[redacted]

Store Number: ☐ ☐ ☐

SURVEY OF MANAGERIAL EFFECTIVENESS

CONFIDENTIAL

ENTER HERE IF AND WHY SURVEY CANNOT BE COMPLETED: _____

_____

For Internal Use Only

FILING STATUS:

- ☐ Full Tenure 1981
- ☐ Half Tenure 1981
- ☐ No Tenure 1981

DATA PROCESSING:

- Code ☐
- Edit ☐
- Keypunch ☐

Store Number: ☐☐☐

The following is a one page Survey of Managerial Effectiveness for [redacted] store managers. We would like you to candidly evaluate the performance of this store manager, for the fiscal 1981 period. To ease the task, we have itemized the key attributes of performance for you. Please indicate for each of the following items your assessment of this store manager's performance, by circling the appropriate number.

5 STRONGLY AGREE
4 AGREE
3 UNDECIDED
2 DISAGREE
1 STRONGLY DISAGREE

A. THIS STORE MANAGER:

1. Has the ability to solve most day-to-day problems	1	2	3	4	5
2. Has difficulty in making rapid and sound decisions	1	2	3	4	5
3. Can quickly adjust to new situations	1	2	3	4	5
4. Takes responsibility in his work	1	2	3	4	5
5. Displays up-to-date knowledge of store operations	1	2	3	4	5
6. Fails to meet the target goals set for the store	1	2	3	4	5
7. Has difficulty in making operating decisions to achieve the goals set for the store.	1	2	3	4	5
8. Keeps an open line of communication with the district supervisor	1	2	3	4	5
9. Can cope with pressure or strain on the job	1	2	3	4	5
10. Maintains physical facilities of the store in good order	1	2	3	4	5
11. Has managerial integrity	1	2	3	4	5

5 STRONGLY AGREE
4 AGREE
3 UNDECIDED
2 DISAGREE
1 STRONGLY DISAGREE

11. Monitors customers and competitors in the trading area	1	2	3	4	5
12. Fails to provide up-to-date information to top management	1	2	3	4	5
13. Readily assumes responsibility	1	2	3	4	5
14. Is an honest employee	1	2	3	4	5
15. Has the creative ability to solve new problems	1	2	3	4	5
16. Seeks to improve the operations of the store	1	2	3	4	5
17. Has good working relations with other store personnel	1	2	3	4	5
18. Fully supports and carries out the company policies	1	2	3	4	5
19. Makes vigorous attempts to achieve the objectives set for the store	1	2	3	4	5
20. Makes an effort to improve his managerial skills	1	2	3	4	5
21. Works long hours when necessary	1	2	3	4	5

B. (Please keep in mind, we are focusing only on fiscal 1981).
CONSIDERING EVERYTHING, HOW SATISFIED WERE YOU WITH THIS MANAGER'S:

a. Achieving the target sales volume	Very Satisfied	1	2	3	4	5	6	7	Very Dissatisfied
b. Controlling store expenses	Very Satisfied	1	2	3	4	5	6	7	Very Dissatisfied
c. Achieving the target gross profit	Very Satisfied	1	2	3	4	5	6	7	Very Dissatisfied
d. Controlling inventories	Very Satisfied	1	2	3	4	5	6	7	Very Dissatisfied
e. Managerial skills	Very Satisfied	1	2	3	4	5	6	7	Very Dissatisfied
f. Taking responsibility	Very Satisfied	1	2	3	4	5	6	7	Very Dissatisfied
g. Level of motivation	Very Satisfied	1	2	3	4	5	6	7	Very Dissatisfied
h. Decision making ability	Very Satisfied	1	2	3	4	5	6	7	Very Dissatisfied
i. Knowledge of trade area	Very Satisfied	1	2	3	4	5	6	7	Very Dissatisfied
j. Tolerance for pressure	Very Satisfied	1	2	3	4	5	6	7	Very Dissatisfied
k. Relations with supervisors	Very Satisfied	1	2	3	4	5	6	7	Very Dissatisfied
l. Managerial potential	Very Satisfied	1	2	3	4	5	6	7	Very Dissatisfied
m. Overall performance	Very Satisfied	1	2	3	4	5	6	7	Very Dissatisfied

Store Number: ☐☐☐

C. The following are the final set of questions. Please provide us with background data for this store manager.

1. What is the age of this store manager? _____ yrs.

2. How long was he or has he been a store manager at this [redacted] Store? ☐☐☐ _____ yrs.

3. Has he been a store manager at any other [redacted] Stores?

   ☐ No

   ☐ Yes. If Yes, for how long? _____ yrs.

4. Has he worked for [redacted] other than being a store manager?

   ☐ No

   ☐ Yes. If yes, for how long? _____ yrs.

5. How long has he worked in retailing (with [redacted] as well as others in the retail industry)? _____ yrs.

6. What is the highest level of education he has attained?

	Check One
a. 8th Grade or less	☐
b. Some High School	☐
c. High School Diploma	☐
d. Some College	☐
e. College Degree	☐
f. Some Graduate School	☐
g. Graduate Degree	☐

DEMOGRAPHIC TABULATION FOR
[redacted] STORES, INCORPORATED

STATE: [redacted]
COUNTY: [redacted]

MARKET AREA: Store No. 24 - 1.5 Mile Ring

UPDATE TREND INFORMATION

1. Population trend data:

		POPULATION		# CHANGE	% CHANGE
	1970	42709			
	1980	41434			
(Est.)	1982	41148	70-82	-1561	-3.66
(Proj.)	1987	40211	82-87	-937	-2.28

2. Household trend data:

		HOUSEHOLDS		# CHANGE	% CHANGE
	1970	12048			
	1980	12952			
(Est.)	1982	12955	70-82	807	6.70
(Proj.)	1987	12572	82-87	-283	-2.20

3. Income trend data:

	AVERAGE HOUSEHOLD INCOME	PER CAPITA INCOME	AVG HH % CHANGE
1969	$ 7750	$ 2194	
(Est.) 1982	$ 22165	$10635	185.99

4. Income distribution trend data:

	-----1969----		-----1982----	
HOUSEHOLD INCOME	NUMBER	%	NUMBER	%
Less than $ 7,500	6611	54.9	3508	27.3
$ 7,500 to $14,999	4209	34.9	3193	24.8
$15,000 to $24,999	1032	8.6	2436	18.9
$25,000 to $34,999	108	0.9	1363	10.6
$35,000 to $49,999	57	0.5	1268	9.9
$50,000 and over	31	0.3	1087	8.5
Median Income	$ 6834		$ 14357	

1980 CENSUS DATA

5. Number and percent of persons by race and ethnic origin:

	NUMBER	PERCENT
Total	41434	100.00
White	32348	78.07
Black	1608	3.88
American Indian, Eskimo and Aleut	56	0.13
Asian and Pacific Islander	95	0.23
Other	7327	17.68
Spanish Origin	28146	67.93

6. Number and percent of persons by age and sex:

YEARS	TOTAL	PERCENT	MALE	PERCENT	FEMALE	PERCENT
Total	41434	100.00	19702	47.55	21732	52.45
0- 4	3988	9.63	2009	4.85	1979	4.78
5- 9	3989	9.63	2061	4.97	1928	4.65
10-14	3542	8.55	1770	4.27	1771	4.28
15-17	2567	6.19	1317	3.18	1249	3.02
18-24	5414	13.07	2577	6.22	2837	6.85
25-34	6455	15.58	3196	7.71	3259	7.87
35-44	3827	9.24	1805	4.36	2022	4.88
45-54	3676	8.87	1624	3.92	2053	4.95
55-64	3674	8.87	1679	4.05	1995	4.81
65+	4302	10.38	1663	4.01	2639	6.37
Median Age:	26.7		25.3		28.1	

7. Number and percent of persons by household status:

	NUMBER	PERCENT
Persons in households:	41013	98.98
Persons in group quarters:	421	1.02

8. Number and percent of persons 15 years old and over by sex and marital status:

MARITAL STATUS	TOTAL	PERCENT	MALE	PERCENT	FEMALE	PERCENT
Total	29915	100.00	13861	46.34	16054	53.66
Single	7255	24.25	3849	12.87	3406	11.38
Married (not sep.	17393	58.14	8689	29.05	8704	29.10
Separated	758	2.53	249	0.83	508	1.70
Widowed	2386	7.98	356	1.19	2030	6.79
Divorced	2123	7.10	719	2.40	1405	4.70

9. Number and percent of households by household type:

HOUSEHOLDS BY TYPE	NUMBER	PERCENT
Total households	12952	100.00
One-person households	2399	18.52
Male	802	6.19
Female	1597	12.33
Two+ person households	10553	81.48
Total Families	10233	79.01
Married couple families	8189	63.22
Other type families	2044	15.78
Non-family households	321	2.48

10. Average number of persons per household: 3.17

11. Average number of persons per family: 3.70

12. Number and percent of housing units by occupancy status, by race, and by Spanish origin of householder:

HOUSING UNITS	TOTAL	PERCENT	BLACK	PERCENT	SPAN. OR.	PERCENT
Total year-round	13394	100.00				
Total occupied	12952	96.70	566	4.22	7384	55.13
Owner occupied	8362	62.43	353	2.63	4651	34.72
Renter occupied	4590	34.27	213	1.59	2733	20.40
Vacant units	442	3.30				

13. Number and percent of year-round units by units at address and rooms in unit:

UNITS AT ADDRESS	NUMBER	PERCENT	ROOMS IN UNIT	NUMBER	PERCENT
1 Unit	11419	85.25	1 Room	183	1.37
2-9 Units	1506	11.24	2-3 Rooms	1848	13.80
10+ Units	435	3.25	4-5 Rooms	7072	52.80
Mobile home or trailer	34	0.26	6+ Rooms	4290	32.03

14. Number and percent of specified owner-occupied non-condominium housing units by value:

HOUSING VALUE	NUMBER	PERCENT
Under $20,000	1704	22.73
$20,000- $39,999	4304	57.41
$40,000- $49,999	833	11.12
$50,000- $79,999	549	7.32
$80,000- $99,999	36	0.48
$100,000-$149,999	36	0.48
$150,000-$199,999	16	0.21
$200,000 +	18	0.24
Median value	$ 28651	

15. Number and percent of specified renter occupied housing units by contract rent:

CONTRACT RENT	NUMBER	PERCENT
Under $100	913	21.36
$100-$149	823	19.71
$150-$199	1068	25.57
$200-$249	688	16.47
$250-$299	381	9.12
$300-$399	260	6.22
$400-$499	39	0.94
$500 +	5	0.11
Median rent	$ 163	

16. Number and percent of condominium housing units by occupancy status (with average value provided for specified owner-occupied units):

CONDOMINIUM UNITS	NUMBER	PERCENT	AVERAGE VALUE
Total	60	100.00	
Owner occupied	7	11.69	$101571
Renter occupied	53	88.31	
Vacant	0	0.00	