INFORMATION TO USERS

This material was produced from a microfilm copy of the original document. While the most advanced technological means to photograph and reproduce this document have been used, the quality is heavily dependent upon the quality of the original submitted.

The following explanation of techniques is provided to help you understand markings or patterns which may appear on this reproduction.

1. The sign or "target" for pages apparently lacking from the document photographed is "Missing Page(s)". If it was possible to obtain the missing page(s) or section, they are spliced into the film along with adjacent pages. This may have necessitated cutting thru an image and duplicating adjacent pages to insure you complete continuity.

2. When an image on the film is obliterated with a large round black mark, it is an indication that the photographer suspected that the copy may have moved during exposure and thus cause a blurred image. You will find a good image of the page in the adjacent frame.

3. When a map, drawing or chart, etc., was part of the material being photographed the photographer followed a definite method in "sectioning" the material. It is customary to begin photoing at the upper left hand corner of a large sheet and to continue photoing from left to right in equal sections with a small overlap. If necessary, sectioning is continued again — beginning below the first row and continuing on until complete.

4. The majority of users indicate that the textual content is of greatest value, however, a somewhat higher quality reproduction could be made from "photographs" if essential to the understanding of the dissertation. Silver prints of "photographs" may be ordered at additional charge by writing the Order Department, giving the catalog number, title, author and specific pages you wish reproduced.

5. PLEASE NOTE: Some pages may have indistinct print. Filmed as received.

Xerox University Microfilms
300 North Zeeb Road
Ann Arbor, Michigan 48106

Downloaded from SHAREOK. Persistent Handle URL: https://hdl.handle.net/11244/4147

76-24,384

GILLINGHAM, James Clark, 1944-
REPRODUCTIVE BEHAVIOR OF THE
RAT SNAKES OF EASTERN NORTH
AMERICA, GENUS ELAPHE.

The University of Oklahoma, Ph.D., 1976
Zoology

Xerox University Microfilms, Ann Arbor, Michigan 48106

THE UNIVERSITY OF OKLAHOMA

GRADUATE COLLEGE

REPRODUCTIVE BEHAVIOR OF THE RAT SNAKES OF EASTERN NORTH AMERICA, GENUS ELAPHE

A DISSERTATION

SUBMITTED TO THE GRADUATE FACULTY

in partial fulfillment of the requirements for the

degree of

DOCTOR OF PHILOSOPHY

BY

JAMES C. GILLINGHAM

Norman, Oklahoma

1976

REPRODUCTIVE BEHAVIOR OF THE

RAT SNAKES OF EASTERN NORTH AMERICA,

GENUS ELAPHE

APPROVED BY

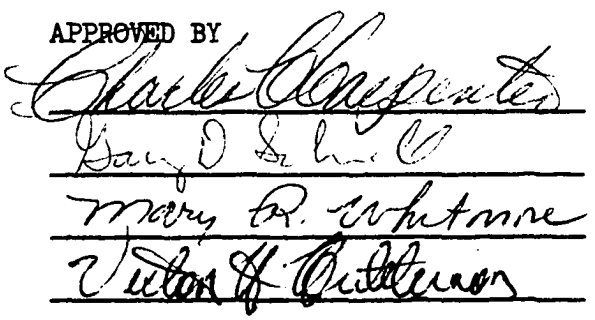

DISSERTATION COMMITTEE

ACKNOWLEDGMENTS

In the course of a lengthy study such as this, one finds, in retrospect, that the list of people involved is very long. Without their various contributions, large or small, my work could not have been completed. First and foremost I would like to thank my major professor, Dr. Charles C. Carpenter for his constant guidance and encouragement. His knowledge in and out of the field made me a willing student and his advice has more than once kept me on the road to achieving my goals.

Dr. Victor H. Hutchison, Dr. Gary D. Schnell and Dr. Mary R. Whitmore, the remaining members of my committee, gave much time providing me with invaluable suggestions and criticisms. The Department of Zoology, the University of Oklahoma Biological Station, the Animal Behavior Laboratory and the Oklahoma City Zoo were the specific sites of my research, and without them and their equipment this research would most assuredly have foundered.

I wish to thank all the students who lent me their time and/or equipment and those who generously helped provide me with research

animals. Special thanks are extended particularly to Frank Bryce, Ronald Gratz, Neil Ford, Randall Grimes and Robert Kinniburgh.

Last, but not least, I wish to thank my wife, Mary Susan, who provided the loving, patient, and understanding domestic environment necessary for the successful completion of research of this duration.

TABLE OF CONTENTS

		Page
List of Tables		vi
List of Illustrations		vii
Introduction		1
PAPER I.	Reproductive behaviour of the Rat Snakes of Eastern North America, Genus Elaphe	3
	Abstract	4
	Methods	6
	Results	10
	Discussion	17
	Acknowledgments	25
	References	26
	Tables	29
	Figure legends	31
	Figures	34
Paper II.	Further analysis of reproductive behavior in the the Western Fox Snake, Elaphe v. vulpina	45
	Abstract	46
	Materials and methods	47
	Results	48
	Discussion	51
	Literature cited	54
	Tables	56
	Figure legends	58
	Figures	59

LIST OF TABLES

PAPER I

Table		Page
I	Snout-vent and total lengths (cm) for all subspecies of E. obsoleta, E. guttata and E. vulpina used in making behaviour trials from 1973-1975	29
II	Mean, range and standard error of the mating behaviour of E. obsoleta, E. guttata, and E. vulpina	30

PAPER II

Table		
1	Uncombined and combined motor patterns with symbols used in sequence transition analysis	56
2	Mean, range, standard error and sample size of four parameters of the mating behavior of E. v. vulpina . , ,	57

LIST OF ILLUSTRATIONS

PAPER I

Figure		Page
1	Courtship motor patterns	34
2	First response of the female to the male in (A) negative trials, (B) positive trials	35
3	Mounting postures and dorsal advance movements	36
4	Distance of male's head posterior to female's head (cm) at courtship initiation and at intromission	37
5	Total number of tail-search copulatory attempts in Phase II, number of dismounts in Phase I and II and index of mating success	38
6	Sketches of steps involved in tail-search copulatory attempt (TSCA) and coital separation	39
7	Tail-search copulatory attempts against time (min) . .	40
9	Sequence diagrams with uncombined motor patterns . . .	41
10	Matrices of combined motor pattern transition frequencies and corresponding sequence diagrams	42
11	(A) Biting hold as exhibited by E. o. quadrivittata during courtship and (B) Bite-hold as exhibited by E. vulpina during coitus	

PAPER II

Figure		page
1	Sketches of the tail-search copulatory attempt in E. v. vulpina.	59
2	Tail-search copulatory attempts against time (min) for E. v. vulpina	60
3	(A) Matrix of combined motor pattern transition frequencies (B) Sequence diagram for E. v. vulpina. . .	61
4	(A) Initial contact of female by male, (B) Dorsal-advance movement by male on female's dorsum, and (C) coital position	62

REPRODUCTIVE BEHAVIOR OF THE RAT SNAKES OF EASTERN NORTH AMERICA, GENUS ELAPHE

INTRODUCTION

The rat snakes, genus Elaphe, are members of the family Colubridae, and are found worldwide. Six species are found in the United States, and like all snakes, little is known about their reproductive behavior. Davis (1936) published the first review of literature on the subject and concluded that further studies were needed. Oliver (1955) described a basic colubrid pattern to courtship and mating behavior.

My objectives were threefold: to make quantitative and qualitative species comparisons; to establish a basic terminology; and to examine the basic colubrid pattern. Three species, Elaphe obsoleta, E. guttata and E. vulpina were studied and the results are presented as two papers to be submitted to refereed journals. The first, prepared for Animal Behaviour, compares the three species studied. A reevaluation of

the reproductive behavior of E. vulpina constitutes the second paper prepared in the style of Herpetologica, and is a continuation of an earlier study (Gillingham, 1974).

LITERATURE CITED

Davis, D. D. 1936. Courtship and mating behavior in snakes. Field Mus. Nat. Hist. Zool. Ser. 20:257-290.

Gillingham, J. C. 1974. Reproductive behavior of the western fox snake, Elaphe v. vulpina (Baird and Girard). Herpetologica 30:309-313.

Oliver, J. A. 1955. The natural history of North American amphibians and reptiles. D. Van Nostrand Co., Inc., Princeton, N. J.

PAPER I

REPRODUCTIVE BEHAVIOUR OF THE RAT SNAKES OF EASTERN NORTH AMERICA, GENUS *ELAPHE*

REPRODUCTIVE BEHAVIOUR OF THE RAT SNAKES OF EASTERN NORTH AMERICA, GENUS ELAPHE

BY JAMES C. GILLINGHAM

Department of Zoology, University of Oklahoma

Abstract.The courtship and mating behaviour of the eastern North American rat snakes Elaphe obsoleta, E. guttata and E. vulpina were studied in captivity over a three year period. Thirteen motor patterns were defined and used in the construction of sequence chains with subsequent analysis. Tongue-flicks, caudocephalic waves, forward-jerking movements and other parameters were measured and compared at the specific level. Significant species differences were noted with respect to motor patterns and receptivity. The basic colubrid pattern was divided into the following three phases: tactile-chase; tactile-alignment; and intromission and coitus.

The literature yields many accounts of colubrid courtship and mating behaviour, most being anecdotal. Judging from the lack of details

recorded, the earliest observations were apparently made from a distance and some may not have been of courtship and mating, but rather combat behaviour, as sexual verification was not always evident.

As early as 100 years ago (E. L., 1880), the "drive to procreate" was recognised as a factor in bringing snakes together to reproduce. The mechanism for maintenance of genetic integrity between species in these animals has not yet been ascertained. While Noble (1937) placed strong emphasis on olfaction and Pope (1941) on mechanical isolation, few authors suggest that behavioural factors enter the picture.

Although all three factors may be in varying degrees responsible for species integrity, critical examination of the courtship and mating behaviour is needed to help resolve this problem. The studies of Davis (1936), Noble (1937), Blanchard and Blanchard (1942), Shaw (1951) and Gillingham (1974) represent attempts to describe these behaviours. However, because of the anecdotal nature of many of these studies and the lack of a common terminology between them, not much light has been shed on the problem of behavioural isolation.

Certain rat snakes of eastern North America breed well in captivity. Preliminary observations were made on Elaphe obsoleta by Mansueti (1946) and Johnson (1951) and on E. guttata by MacMahon (1951), Bechtel and Bechtel (1958) and Holman (1960). Mating behaviour of E. vulpina was described by Gillingham (1974) and the results of that study demonstrated the need for the present endeavor.

My objectives were threefold: to critically compare the species qualitatively and quantitatively; to establish a basic terminology; and to determine if the basic colubrid triphasic behavioural schema of

Gillingham et al. (1976) holds for Elaphe.

Methods

Subjects

Animals for this study were either captured in the field or made available by the Oklahoma City Zoo, Oklahoma City, Oklahoma. Three races of Elaphe obsoleta were used. The black rat snakes, E. o. obsoleta, were captured in Wisconsin, Missouri and Oklahoma, the gray rat snakes, E. o. spiloides, in Tennessee and Mississippi and the yellow rat snakes, E. o. quadrivittata, in north central Florida.

Three races of E. guttata were used. The red rat snakes, E. g. guttata, were captured in Louisiana and northern Florida and the great plains rat snakes, E. g. emoryi, in Oklahoma and Kansas. Specimens of the rosy rat snake, E. g. rosacea, were provided by the Oklahoma City Zoo. The Western fox snakes, E. v. vulpina, were taken in Wisconsin. Additional data for this snake were taken from an earlier study (Gillingham, 1974).

All snakes were adults (Table I) and were housed individually. All but 20 snakes were kept in an environmental chamber maintained at 25°C with a 12-hr light/12-hr dark lighting schedule and were tested within two weeks after capture. A second group (10 E. o. obsoleta) was placed in an outdoor man-made hibernaculum from November 1973 to February 1974, removed and tested. A final group (10 E. o. spiloides) was subjected to an artificial temperature and photoperiod regime from November 1974 to February 1975 and then tested. This was accomplished with an

environmental chamber in which temperature and photophase were gradually decreased and increased over the 3-mo period.

Over a 3-yr period 35 of 143 tests resulted in courtship and/or mating behaviour. Testing was accomplished by placing a male at one end and a female at the other end of a glass-fronted chamber (182 X 60 X 60 cm) provided with a sand substrate. If no courtship was observed in 30 min, the pair was removed. If courtship did commence, it was recorded on videotape, 16 mm and/or 8 mm movie film along with a tape-recorded verbal account.

Motor Patterns

I defined 13 motor patterns of males as basic components of the courtship sequence. The 2 letters in parentheses represent symbols used in the sequence analysis.

(i) Touch (TO): Male approaches female and makes contact with her trunk using his snout (Fig. 1A).

(ii) Mount (MT): Male positions his head on dorsum of female keeping his chin in close contact with her as this action progresses (Fig. 1B).

(iii) Chase (CH): Rapid pursuit by male of fleeing female. Male not in contact with female (Fig. 1C).

(iv) Chase-Mount (CM): Male follows or moves with fleeing female while maintaining chin and/or trunk contact with her dorsum (Fig. 1D).

(v) Dorsal-Advance Movement (DM): Anteriorly directed movement of mounted male with chin adpressed to the medial or lateral dorsum of the female (Fig. 1E).

(vi) Forward-Jerking (JK): Rhythmic cutaneous jerking movement of trunk region, described by Shaw (1951) and Gillingham (1974) (Fig. 1E).

(vii) Writhe (WR): Rhythmic sliding, twisting and turning movement performed while completely mounted on female (Fig. 1G).

(viii) Caudocephalic Waves (CC): Series of ventral to ventrolateral trunk contractions progressing in an anterior direction, most well-defined in areas in contact with dorsum of female (Fig. 1H).

(ix) Writhe-Bump (WB): Action similar to writhe but with addition of local dorsoventral trunk movements (Fig. 1I).

(x) Tail-Search Copulatory Attempt (CA): Complex tail movements as male attempts cloacal juxtaposition and intromission, as described by Gillingham et al. (1976) (Fig. 1J).

(xi) Intromission (IN): Insertion of one hemipenis in cloaca of female.

(xii) Biting (BT): Male grasps female in neck or trunk region with subsequent release.

(xiii) Discontinuation (DS): Male dismounts female without copulation and resumes investigative behaviour or assumes a coiled position.

For the sequence analysis some of the closely related patterns were combined to give the following 6 classes, each symbolised by 3 letters:

(i) Touch-Mount (TMT): Male approaches, makes contact and mounts female.

(ii) Chase-Chase-Mount (CCM): Pursuit of fleeing female by male, with or without actual contact.

(iii) Dorsal-Advance Movement (DAM): Same as (DM) above.

(iv) Writhe-Bump (WRB): Same as (WB) above.

(v) Caudocephalic Waves (CCW): Same as (CC) above.

(vi) Tail-Search Copulatory Attempt (TCA): Same as (CA) above.

Four motor patterns observed were not used in the sequence analysis either because of their irrelevance to courtship or low frequency of occurrence.

(i) Tail-Raising: Lifting of tail in a rigid manner to an angle of about 45° from horizontal by both male and female. This action followed both coital separation or defecation.

(ii) Hemipenal Extrusion: Eversion of one or both hemipenes exclusive of tail-search copulatory attempt.

(iii) Cloacal Gaping: Motor pattern exhibited by females only, where tail is raised slightly and cloacal aperture is opened wide.

(iv) Body-Bridging: Dorsal arching of trunk in response to contact by another snake at that point.

Volleys of tongue-flicking by males was common throughout courtship, but due to temporal overlap with the motor patterns described, it was not included in the sequence analysis. The frequency of flicking within these volleys was measured and compared between species.

Analysis

Voice-recording transcriptions and videotapes were analysed for overall patterns and the movie films were analysed on a Vanguard motion analyser for more detailed measurements. An analysis of variance was performed on various parameters between the three species and seven races. Duncan's multiple range test was performed on those data showing significant F values (Steel and Torrie, 1960).

Motor pattern units were arranged into sequences for further analysis by the methods described by Chatfield and Lemon (1970). Matrices of observed and expected motor pattern transition frequencies were set up and tested for random deviations using chi square. Sequence diagrams for each species were constructed both on the basis of transition frequencies and relative deviations as a measure of transition probability between behavioural events (Altmann, 1968).

A subjective analysis of all data used in creating the qualitative descriptions, and those rare events eliminated from the transition matrices for statistical reasons were taken into consideration in these descriptions. Line Drawings describing various sequences and motor pattern units were made directly from the cinematographic record.

Results

The courtship and mating behaviours of the rat snakes studied were divided into the three phases described by Gillingham et al. (1976): tactile-chase (I), tactile-alignment (II) and intromission and coitus (III). The sequence analyses used the motor patterns described above. Indices of mating success, dismount frequencies and total copulatory attempts were used as measures of female receptivity. Interspecific (species X species) and intraspecific (subspecies X subspecies) trials were made. Successful intraspecific trials of E. guttata and E. obsoleta were observed and the data incorporated into that of the respective species group. Although numerous trials were made, no interspecific matings occurred.

Phase I

The tactile-chase phase began when the male initiated courtship activities, and ended at the first copulatory attempt. Successful trials showed average tactile-chase durations to be highest for E. vulpina (12.5 min). E. guttata, with the lowest value (5.0 min), was significantly lower than both E. vulpina and E. obsoleta (Table 2, $P<0.05$)

A female, when contacted by a male reacted in one of two ways; these responses differed between the species studied. In negative (unsuccessful) trials a female showed either a forward-jerking response or was passive (no response, NR); the female E. vulpina exhibited a higher forward-jerking incidence on contact than the other two species ($X^2=31.40$, $P<0.005$, d.f.= 2; Fig. 2A).

In trials that led to successful mating the female E. vulpina responded to the male's first contact with forward-jerking behaviour 85.7% of the time while E. obsoleta and E. guttata made this response 26.6% and 10.0%, respectively ($X^2=20.36$, $P<0.005$, d.f.=2;Fig. 2B). The rate of forward-jerking ranged between 1.4 and 1.8 jerks/sec with no significant differences between species or sexes (Table II).

Actual courtship began as the male, chin adpressed to the female's dorsum, moved toward her head (dorsal advance movements; Fig. 3). This movement proceeded directly along the dorsal midline of the female (sagittally) or to the right or left of the midline (para-sagittally or laterally). As this action progressed, the female moved rapidly forward, often dislodging the courting male. If the male was dislodged, a chase resulted; if he managed to maintain his dorsal position as she moved, a chase-mount resulted. When the female's flight ceased, the male resumed

his courtship in the same sequence as before, i.e. contact, mount and dorsal advance movement.

The caudocephalic waves first appeared late in Phase I for E. obsoleta and E. vulpina. The similar writhe-bumps of E. guttata were also apparent late in this phase, and were measured at an average of 1.2/sec, significantly lower ($P<0.01$) than the 1.6 and 1.7/sec caudocephalic waves of E. obsoleta and E. vulpina, respectively (Table II).

Phase II

The tactile-alignment phase began with the first tail-search copulatory attempt (TSCA) and ended at hemipenal intromission. The caudocephalic waves (or writhe-bumps) and TSCA are the most frequent motor patterns exhibited during this phase, comprising an average of 86.4%, 75.9% and 79.9% of E. obsoleta, E. guttata, and E. vulpina, Phase II motor pattern transitions, respectively.

A TSCA began as a slow twitching of the last few centimeters of the male's tail as it lie parallel to that of the female. The tail-twitching became more rapid and within seconds involved the entire tail and about fifteen cm of the posterior trunk. At this time a loop of the male's tail was thrown over the female's tail and the region just posterior to this loop was pushed beneath the female's tail. Her tail was then held between a dorsal-anterior loop and a ventral-posterior loop with the latter twisted in such a way that the ventral scutes and cloacal area made contact with the ventral region of the female (Fig.6). This configuration was usually formed posterior to the female's vent and was then slid anteriorly beneath the cloaca of the female. If intromission did

not take place, the tail of the male straightened parallel to her tail, and the loops reformed and again moved anteriorly. Two or three such formations in rapid succession made up one TSCA, each of which was followed by a period of tactile movements from one to several minutes. The TSCA's occurred irregularly at the beginning of Phase II, but became more evenly spaced just prior to intromission (Fig. 7).

The number of TSCA's needed by the male to reach intromission varied between species: E. guttata required an average of 2.8 per trial, significantly lower than the other two species (Fig. 5, $P<0.01$). The tactile movements showed a significant rate change (decrease) from Phase I to Phase II only in E. vulpina ($P<0.01$) while in Phase II E. guttata showed a rate significantly lower than E. obsoleta and E. vulpina (Table II, $P<0.01$).

As courtship progressed toward intromission in Phase II the tongue-flick rate of the male increased markedly in all three species, with the greatest increase for E. guttata going from an average of 1.5/sec in Phase I to an average of 2.4/sec in Phase II. The rate increases of all species were significant at the 1 percent level (Table II).

During Phase II very little forward-jerking behaviour was shown by E. obsoleta or E. vulpina, with none by E. guttata. Phase II was shorter for E. guttata (4.5 min, $P<0.01$) than E. obsoleta (18.3 min) or E. vulpina (9.9 min, Table II).

Phase II was terminated at hemipenal intromission. The male E. vulpina grasped the female's head in his jaws at this time, or just prior to this time, holding her firmly until coital separation. E. o. obsoleta and E. o. quadrivittata males were the only snakes to show

biting and writhing motor patterns during the trials. In long sequences of TSCA's (more than 10), the male exhibited writhing behaviour followed by biting. In a singular episode, an E. o. obsoleta male bit the female he was courting after 14 TSCA's. Intromission in this case was denied the male because his left hemipenis became lodged in a fresh scale clip 2 cm behind the vent. In this special case, well-defined cloacal gaping was observed in the female during the TSCA's of the male only because his partially everted hemipenis prevented complete tail juxtaposition.

Phase III

Intromission of a hemipenis marked the beginning of this phase and was accomplished when the female opened her cloacal aperture during the final TSCA by the male. During coitus (Phase III) the male E. obsoleta and E. guttata held their heads an average of 10.3 and 2.5 cm, respectively, behind that of the female, while E. vulpina usually held the female just behind the head with his jaws during this phase (Fig. 8). All three species showed an anterior advancement of their head position from courtship initiation to coitus (Fig. 4).

No tongue-flicking was observed during coitus and the only movements observed were caudal where both tails (male and female) slowly moved back and forth, dorso-ventrally and laterally. Occasionally a slight lateral pulsation of the male's body could be observed just anterior to the vent. On a few occasions the female edged forward slightly and the male responded by moving with her.

Phase III lasted an average of 25.3 min in E. guttata, significantly longer (Table II, $P<0.05$) than either E. obsoleta (20.7 min) or E.

vulpina (20.3 min). Actual separation was achieved either by the tails moving away from one another (Fig. 6) or the snakes themselves moving in opposite directions until the hemipenis was pulled from the cloaca (Fig. 6). Hemipenal inversion (retraction) occurred after removal from the cloaca and was not apparently responsible for separation. All three species showed little variation during this act and all demonstrated post-copulatory tail-raising behaviour for several minutes following.

Behavioural Sequences

The previously defined courtship motor patterns were arranged into sequences and transition motor pattern pairs from each sequence were tallied into appropriate cells of a transition matrix. This resulted in a single matrix for each species containing motor pattern transition totals. Grouping of certain motor patterns increased the expected values to acceptable levels and a matrix resulted for each species where chi square values were significant ($P<0.005$), asserting that the motor patterns were ordered in a fashion such that chance alone was not responsible.

Two sequence diagrams were drawn for each species, one with the original matrix so that even the rare acts were considered, and the second with the grouped motor pattern transition matrix. The former used the number of occurrences as a measure of transition frequency (Fig. 9) while the latter used the relative deviation (Altmann, 1968) as a measure of transition probability (Fig. 10).

Female Receptivity

Several measures of female receptivity were made. Following entry into the test chamber the contact latency and courtship latency were measured in the three species and no significant differences were detected. However, three additional parameters showed significant differences ($P<0.01$). An Index of Mating Success was calculated from the three phase durations as follows:

$$\frac{I + II + III}{I + II} = I.M.S.$$

With the I.M.S. averaged for all trials for each species, E. guttata had an I.M.S. of 5.1, significantly higher than the other two species (Fig. 5).

When the number of dismounts per trial were compared, E. guttata females displaced the courting male significantly fewer times than E. obsoleta and E. vulpina and the number of TSCA's required for intromission was significantly lower for E. guttata (Fig. 5).

Subspecies Behaviour

Due to a decreased sample size, all of the above species parameters were not measured in the six subspecies of E. guttata and E. obsoleta. Comparisons were made, however, with respect to tongue-flick rates and caudocephalic waves (writhe-bumps).

In Phase I and Phase II, E. o. obsoleta exhibited a significantly lower rate of caudocephalic wave movements than E. o. spiloides or E. o. quadrivittata ($P<0.01$). The rate of writhe-bumping of E. g. guttata, E. g. emoryi and E. g. rosacea were very uniform within the species. Tongue-flicking measurements showed no significant differences

in rate between the 6 subspecies in Phase I or in Phase II, but each race showed a significant rate increase from Phase I to Phase II ($P<0.01$).

All the subspecies of E. obsoleta studied showed almost identical qualitative patterns, as did the subspecies within E. guttata. Intraspecific trials between E. g. guttata and E. g. emoryi and between E. o. obsoleta and E. o. spiloides were successful. All interspecific crosses tried were unsuccessful and were characterized by much tongue-flicking and mutual avoidance.

E. o. obsoleta and E. o. quadrivittata occasionally showed courtship biting (as opposed to coital biting of E. vulpina, Fig. 11). In trials of the former where the female coiled up and did not appear receptive the male exhibited writhing behaviour upon her, followed by biting in the neck and/or trunk area.

Discussion

Although the mating behaviour of these species has not been compared to date, the general pattern of each is in accord with earlier reports. Mansueti (1946) and Johnson (1950) concur that the male E. obsoleta mounts the female, exhibits various tactile movements and enters coitus following rapid tail movements. MacMahon (1957), Bechtel and Bechtel (1958) and Holman (1960) also agree that a similar pattern is seen in E. guttata. Carpenter (1947), Simonson (1951) and Gillingham (1974), demonstrated that E. vulpina does not vary appreciably from the former two species but has the additional coital neck-biting.

All three species can, therefore, be placed into the behavioural

triphasic schema of Gillingham et al. (1976). The considerable amount of tongue-flicking observed, with its rate increase from Phase I to Phase II, implies an olfactory role in species and sex recognition. This activity ceases entirely once the snakes are united.

The species-specific displays of birds and mammals, and other reptiles (notably lizards), are not seen here in the context of reproduction, but within this context, the specific differences in motor patterns might contribute to species integrity. The tactile movements of E. obsoleta and E. vulpina males while mounted on the female are of a different type than that exhibited by E. guttata males in the same position. The caudocephalic waves of the former and the writhe-bumps of the latter show not only a difference in quality, but also in rate. Close examination of the ventral tactile movements of the male while mounted on the female reveal decided differences between species. Although Noble (1937) stated that no caudocephalic "undulations" were observed in E. o. obsoleta, I observed definite caudocephalic waves in all courtship episodes. They consisted of a series of ventro-lateral contractions which were present only where direct contact was made between the male and female; that portion of the male's trunk touching the substrate was immobile. In E. guttata the writhe-bumps lacked the wave pattern of the caudocephalic waves but showed an anterior-posterior, back-and forth sliding of trunk loops accompanied by local dorso-ventral pulsations. As this occurred a net anterior movement of the male resulted, a centimeter or so with each writhe-bump. MacMahon (1957) described twitching, rippling and jerky movements by the male E. g.

guttata during courtship, which were probably the writhe-bumps described above. The importance of these patterns in species recognition remains to be determined, but the fact remains that they are present and distinct.

Tactile movements are not restricted to the caudocephalic waves and writhe-bumps. During the dorsal-advance movements, males press their chins tightly against the dorsal and dorsolateral surface of the female. Tongue-flicking undoubtedly has olfactory implications, but I believe the contact of each flick with the female's dorsum must be considered as a possible source of tactile stimulation during courtship.

As courtship proceeds there is a similar trend in the males of all three species toward anterior advancement, and at intromission his head is just behind that of the female. If she moves forward and he loses position, he endeavers to advance again to the position described. It appears that this head orientation is important if for no other reason than to insure that there is an anterior-anterior, posterior-posterior alignment between the trunks and tails. In rare instances in all species, the male has been observed to move toward the tail with his head and chin adpressed to the female's dorsum. However, as he approached the caudal region, the path was reversed and correct orientation was resumed.

The forward-jerking behaviour exhibited by Elaphe when congeneric and conspecific contact is made, is of uncertain communicative function. In E. guttata and E. obsoleta the manifestation of this behaviour by the female signals her nonreceptivity to her partner. Its function in E. vulpina is not clear at this time, but is apparently unrelated to

receptivity as it is exhibited with equal frequency in positive and negative trials.

Blanchard and Blanchard (1942) described the copulatory attempt as "a maneuver of the tails too quick to follow with the eye." I have resolved this complex motor pattern into basic components (Gillingham et al., 1976) and settled another question, i.e. does the female take an active part in coition? Blanchard and Blanchard (1942) first speculated that the female garter snake "accepts copulation or refuses it" but showed little evidence to uphold the hypothesis. My study shows that in most cases at the instant of intromission the tails of the two snakes were so close together that actual hemipenal penetration was not observed. In one instance, however, where the male's hemipenis was accidently incapacitated (see results above), the female gaped her cloaca with each TSCA of the male, indicating that she does take an active part in intromission. Beuchelt (1936) thought that the hemipenis of Natrix natrix was inserted in a half tumescent condition, further necessitating female participation in the act of copulation.

Further observations lead to the conclusion that this gaping is reflexive. A female E. o. quadrivittata was observed to raise her tail and gape the cloaca every time an investigating (but not actively courting) male crawled over the posterior third of her trunk. A male E. o. obsoleta was observed to evert the hemipenes in a similar context. The reflexive nature of this act is further substantiated by Truitt (1927) who reported that a live male garter snake copulated with a fresh-killed (head crushed) female.

The tail-search copulatory attemp (TSCA) was previously best described by Shaw (1951) for Pituophis m. melanoleucus and differs from E. guttata and E. obsoleta only in that very little "tail-lifting" was observed in this study. This tail-lifting is a behavioural component of the copulatory attempt in Thamnophis and was reported in greatest detail by Blanchard and Blanchard (1942) and Ball (1976) for T. s. sirtalis and T. melanogaster respectively. The TSCA's of the present study were unevenly spaced early in Phase II but became regular near the time of intromission (Fig. 7). E. guttata required significantly fewer TSCA's to reach intromission than E. obsoleta, a fact lending evidence toward a greater receptivity for E. guttata.

Only in E. vulpina did the male exhibit a coital bite-hold on the female. Biting during courtship was seen in E. obsoleta males and is apparently employed as a stimulus to cause the female to change to a position favourable to copulation. This biting took place when the female was coiled and the male ceased the caudocephalic waves and initiated the writhing motor pattern. If the female remained coiled, even following writhing the male bit her with quick release in the neck or trunk region. In most instances she changed position and typical courtship resumed. Biting did not result in tissue damage. Although no coital biting occurred in E. obsoleta or E. guttata, it has been reported for E. quatuorlineata, E. vulpina and E. longissima by Stemmler-Morath (1935), Gillingham (1974) and Lotze (1975), respectively. In other colubrids, such as the indigo snake, Drymarchon corais (Tinkle, 1951), the milk snake, Lampropeltis triangulum syspila (Fitch and Fleet, 1970), the speckled king snake, Lampropeltis getulus

holbrooki (Meade, 1932) and the pine snake, Pituophis m. melanoleucus (Shaw, 1951).

Although actual hemipenal insertion was rarely witnessed because of the closeness of the vents, coitus could be detected by observing the movements of the tails. Following intromission both tails would slowly and rhythmically move back and forth, pause for a few seconds and resume the movement. This behaviour continued throughout coitus and was also described for a mating between E. o. obsoleta and E. o. confinis (Johnson, 1950).

Separation was accomplished either by a simple bifurcating of the tails or by one or both snakes crawling away until "dragging" ultimately caused hemipenal separation. Elaphe guttata used the former method exclusively while E. obsoleta and E. vulpina separated by both procedures. Coital duration (Phase III) was not significantly different for the two species. Holman (1960) recorded a coital time for E. g. guttata of ten min, five minutes less than the lowest value observed for this subspecies in the present study. Johnson (1950), however, recorded values for E. obsoleta within the range measured here for the same species.

The transition analyses on the observed behavioural sequences rejects the null hypothesis that these motor patterns occur at random. The sequence diagrams created from the original matrix and using uncombined motor units (Fig. 9) demonstrate that E. guttata has a less complicated pattern and includes the writhe-bump motor pattern instead of caudocephalic waves. Here, also, the frequency of chasing and chase-mounting is reduced. Elaphe obsoleta and E. vulpina show more

complexity early in courtship, with the chase and chase-mount frequency increased. All of the early courtship motor patterns revolve around the forward-jerking behaviour (Fig. 9) and demonstrate its increased frequency in this species (E. vulpina), and imply its essential role to the courtship behaviour as a whole. Biting behaviour, in its double context is also demonstrated in the diagrams of E. obsoleta and E. vulpina and its absence is conspicuous for E. guttata.

The sequence diagrams resulting from the combined motor pattern matrices (Fig. 10) demonstrate that, again, E. guttata has a more direct behaviour pattern, but more importantly, the Phase I and Phase II divisions can be clearly observed. Each phase in E. obsoleta and E. vulpina show a Phase I cycle between dorsal advance movements and chasing in the former and between forward-jerking and chasing in the latter. Once Phase II is reached by all three species, a low probability of return to Phase I motor patterns exists, while E. guttata shows a greater tendency toward immediate progression from Phase I to Phase II. Copulating snakes are quite obviously vulnerable to predation, particularly those that mate in the open and without cover of any kind. It seems appropriate that a measure of mating "speed and efficiency" be made, and since it was earlier hypothesized that the female allowed intromission to occur, her receptivity to the male is an important parameter to consider.

Phase I and Phase II represent the actual courtship durations and E. guttata shows a significantly reduced period of time for each, giving this species a greater index of mating success than E. obsoleta

or E. vulpina. The number of times the male lost physical contact with the female (dismounts) also is reduced significantly for E. guttata, as are the TSCA's required to reach intromission.

The validity of the above argument can only be tested with actual field data. The western fox snake, Elaphe v. vulpina, is known to copulate in open areas (Carpenter, 1947; Gillingham, 1974), as is the eastern coachwhip, Masticophis f. flagellum and diamond back water snake, Natrix rhombifera (R. Gratz, personal communication and personal observation, respectively). Courtship and mating behaviour of E. obsoleta and E. guttata have to date been recorded only in captivity. Wright and Wright (1957) call E. o. obsoleta the " most arboreal of our northeastern snakes" and if copulation occurs in this more sheltered situation, a lowered female receptivity for this species would be understandable.

E. vulpina courtship and mating behaviour is distinguished by the high probability of forward-jerking and the coital neck-bite. E. obsoleta exhibits less forward-jerking and biting is in a different context, but is overall quite similar to E. vulpina. E. guttata lacks biting behaviour, shows minimal forward-jerking and chasing, and has a simple, direct sequence of mating behaviour. Furthermore, the latter has a significantly lower number of dismounts per trial, requires fewer TSCA's to reach intromission and has a higher index of mating success than the other two species. If these parameters measure the receptivity of the female E. guttata, then this species apparently mates with more efficiency than E. obsoleta and E. vulpina, perhaps implying more reliance on initial (and rapid) olfactory recognition and less on tactile patterns.

Acknowledgments

This study was supported in part by a Sigma Xi grant-in-aid of research and by a Hobart F. Landreth research fellowship through the Oklahoma City Zoo, Oklahoma City, Oklahoma and was submitted in partial fulfillment of the requirements for the doctor of philosophy degree in zoology at the University of Oklahoma. I am indebted to Dr Charles C. Carpenter for his constant encouragement and guidance. I am grateful to Dr Gary D. Schnell, Dr Victor H. Hutchison and Dr Mary R. Whitmore for their invaluable advice and criticism. Assistance in animal procurement was generously provided by Neil Ford, Ronald Gratz and Randall Grimes. Understanding and patience along with typist and proof-reader services were lovingly provided by my wife, Mary Susan.

REFERENCES

Altmann, S. A. (1968). Sociobiology of rhesus monkeys III. The basic communication network. Behaviour, 32, 17-32.

Ball, R. L. (1976). The courtship and mating behaviors of Thamnophis melanogaster. Unpublished master's thesis, Univ. Okla., Norman, Oklahoma.

Bechtel, H. B. and Bechtel, E. (1958). Reproduction in captive corn snakes, Elaphe guttata guttata. Copeia, 1958, 148-149.

Beuchelt, H. (1936). Bau, Funktion und Entwicklung der Begattungs-organe der mannlichen Ringelnatter (Natrix natrix L.) und Kreuzotter (Vipera berus L.). Morph. Jahrb., 78, 445-516.

Blanchard, F. N. and Blanchard F. C. (1942). Mating of the garter snake Thamnophis sirtalis sirtalis (Linnaeus). Papers, Mich. Acad. Sci, Arts and Let., 27, 215-234.

Carpenter, C. C. (1947). Copulation of the fox snake. Copeia, 1947, 275.

Chatfield, C. and Lemon, R. E. (1970). Analysing sequences of behavioural events. J. Theor. Biol., 29, 427-445.

Davis, D. D. (1936). Courtship and mating behavior in snakes. Field Mus. Nat. Hist. Zool. Series. 20, 257-290.

"E. L." (1880). Bundles of snakes. Amer. Nat., 14, 206-207.

Fitch, H. S. and Fleet, R. R. (1970). Natural history of the milk snake (Lampropeltis triangulum) in northeastern Kansas. Herpetologica, 26, 387-396.

Gillingham, J. C. (1974). Reproductive behavior of the western fox snake, Elaphe v. vulpina (Baird and Girard). Herpetologica, 30, 309-313.

Gillingham, J. C. (1976). A further analysis of the reproductive behavior of the western fox snake, Elaphe v. vulpina. Herpetologica, (submitted for publication.

Gillingham, J. C., Carpenter, C. C., Brecke, B. J. and Murphy, J. B. (1976). Courtship and copulatory behavior of the Mexican milk snake, Lampropeltis triangulum sinaloae (Colubridae).Southwest. Nat., (submitted for publication).

Holman, J. A. (1960). Reproduction in a pair of corn snakes, Elaphe guttata guttata. Copeia, 1960, 239.

Johnson, R. M. (1950). Mating activities between two subspecies of Elaphe obsoleta. Herpetologica, 6, 42-44.

Lotze, H. U. (1975). Zum Paarungsverhalten der Askulapnatter, Elaphe longissima. Salamandra, 11, 67-76.

MacMahon, J. A. (1957). Observations on mating in the corn snake, Elaphe guttata guttata. Copeia, 1957, 232.

Mansueti, R. (1946). Mating of the pilot blacksnake. Herpetologica, 1946, 98-100.

Meade, G. P. (1932). Notes on the breeding habits of Say's king snake in captivity. Bull. Antiven. Inst. Amer., 5, 70-71.

Noble, G. K. (1937). The sense organs involved in the courtship of Storeria, Thamnophis and other snakes. Bull. Amer. Mus. Nat. Hist., 73, 673-725.

Pope, C. H. (1941). Copulatory adjustment in snakes. Field Mus. Nat. Hist. Pub. Zool., 24, 249-252.

Shaw, C. E. (1951). Male combat in American colubrid snakes with remarks on other colubrid and elapid snakes. Herpetologica, 7, 149-168.

Simonson, W. E. (1951). Courtship and mating of the fox snake, Elaphe vulpina vulpina. Copeia, 1951, 309.

Steel, R. G. D. and Torrie, J. H. (1960). Principles and procedures in statistics. McGraw-Hill, New York, 481 pp.

Stemmler-Morath, C. (1935). 'Beitrag zur Fortpflanzungsbiologie europaischer Colubridae.' Zool. Garten. 8,38-41.

Tinkle, D. W. (1951). Peculiar behavior of indigo snakes in captivity. Copeia, 1951, 77-78.

Truitt, R. V. (1927). Notes on the mating of snakes. Copeia, 162, 21-24.

Wright, A. H. and A. A. Wright. (1957). Handbook of snakes of the United States and Canada. Comstock Publishing Associates, Ithaca, N. Y.

TABLE I. Snout-Vent and Total Lengths (cm) for all Subspecies of E. obsoleta, E. guttata and E. vulpina used in Mating Behaviour Trials From 1973-1975.

Subspecies	N	Snout-Vent		Total	
		$\bar{X}$	Range	$\bar{X}$	Range
Males					
E. o. obsoleta	13	133.4	92.4-161.5	157.3	111.6-190.0
E. o. quadrivittata	4	123.8	110.0-130.2	146.4	131.4-160.3
E. o. spiloides	8	128.1	109.4-146.1	153.2	126.2-176.9
E. g. guttata	2	117.5	113.7-121.3	141.7	136.5-146.8
E. g. emoryi	9	93.1	63.1-110.0	108.8	74.5-129.8
E. g. rosacea	1	82.5	82.5-82.5	102.5	102.5-102.5
E. v. vulpina	7	113.0	95.0-123.4	129.0	112.6-140.0
Females					
E. o. obsoleta	10	117.0	90.8-132.3	136.9	107.9-155.4
E. o. quadrivittata	3	111.9	98.6-134.2	126.1	111.2-148.6
E. o. spiloides	6	117.9	106.6-131.3	138.8	125.4-150.4
E. g. guttata	3	119.5	118.1-121.0	138.1	137.4-139.4
E. g. emoryi	6	100.5	91.3-111.6	113.3	104.5-127.0
E. g. rosacea	1	84.2	84.2-84.2	100.5	100.5-100.5
E. v. vulpina	6	86.5	80.3-91.7	101.1	92.8-107.3

TABLE II. Mean, Range, Standard Error and Sample Size of Four Parameters of the Mating Behaviour of Elaphe obsoleta, E. guttata, and E. vulpina. Tactile Movements Refer to Caudocephalic Waves in E. obsoleta and E. vulpina and Writhe-bumps in E. guttata.

	E. obsoleta				E. guttata				E. vulpina			
	N	$\bar{X}$	Range	S.E.	N	$\bar{X}$	Range	S.E.	N	$\bar{X}$	Range	S.E.
TACTILE MOVEMENTS SEC $^{-1}$												
Phase I	45	1.6	0.6-2.5	0.08	24	1.2	1.0-1.5	0.04	12	1.7	1.2-2.1	0.09
Phase II	48	1.7	0.7-3.3	0.08	25	1.3	1.0-2.0	0.05	13	1.4	1.0-1.9	0.07
TONGUE-FLICKS SEC^{-1}												
Phase I	75	1.6	0.7-5.3	0.08	42	1.5	1.0-3.5	0.06	25	1.9	1.2-3.0	0.08
Phase II	69	2.3	1.0-6.6	0.12	38	2.4	1.2-4.0	0.09	19	2.7	1.9-4.1	0.15
FORWARD-JERKING SEC^{-1}												
Males	14	1.6	1.0-2.1	0.08	6	1.6	1.0-2.0	0.14	10	1.6	1.5-2.0	0.05
Females	11	1.5	1.0-2.0	0.11	4	1.8	1.6-2.0	0.08	8	1.6	1.5-2.0	0.06
PHASE DURATION (MIN)												
Phase I	21	10.3	2.0-23.0	1.23	11	5.0	1.0-10.0	0.86	12	12.5	9.0-17.0	0.73
Phase II	17	18.3	7.0-43.0	2.32	11	4.5	1.0-22.0	1.81	12	9.9	8.0-16.0	0.68
Phase III	15	20.7	11.0-28.0	1.11	10	25.3	15.0-31.0	1.32	12	20.3	15.0-26.0	0.87

Figure Legends

Fig. 1. Courtship motor patterns. A, touch; B, mount; C, chase; D, chase-mount; E, dorsal-advance movement; F, forward-jerking movement; G, writhe; H, caudocephalic waves; I, writhe-bump; and J, tail-search copulatory attempt.

Fig. 2. (A) First response of the female to the male in negative trials for E. obsoleta (OBS), E. guttata (GUT) and E. vulpina (VUL). (B) First response of the female to the male in positive trials for E. obsoleta (OBS), E. guttata (GUT) and E. vulpina (VUL). JK=forward-jerking movements and NR= no response.

Fig. 3. Mounting posture in (A) E. obsoleta, (B) E. guttata and (C) E. vulpina and dorsal advance movements of (D) E. obsoleta, (E) E. guttata and (F) E. vulpina.

Fig. 4. Distance of male's head posterior to female's head (cm) at courtship initiation (I) and at intromission (C) in E. obsoleta (OBS), E. guttata (GUT) and E. vulpina (VUL). Vertical lines represent range, horizontal lines represent mean and open rectangles represents two standard errors. Sample size is in parentheses.

Fig. 5. Total number of tail-search copulatory attempts in Phase II, number of dismounts in Phase I and Phase II (see test) and index of mating

success (I+II+III/I+II) for E. obsoleta (OBS), E. guttata (GUT) and E. vulpina (VUL). Symbols the same as Fig. 4.

Fig. 6. Sketches of steps involved in tail-search copulatory attempt (TSCA) and coital separation. (A) Parallel contact of tails, (B) Placement of anterior-dorsal loop on female's tail, (C) Posterior-ventral loop pushed beneath female's tail, (D-F) Tail separation by bifurcation and (G) "Dragging" type separation in E. obsoleta with male and female moving in opposite directions.

Fig. 7. Tail-search copulatory attempts against time (min) for E. obsoleta, E. guttata and E. vulpina. Each vertical line represents one TSCA.

Fig. 8. Coital position of (A) E. obsoleta, (B) E. guttata and (C) E. vulpina.

Fig. 9. Sequence diagrams with uncombined motor patterns. (A) E. obsoleta, (B) E. guttata and (C) E. vulpina. Thickness of arrows (use scale) indicates observed transition frequency.

Fig. 10. Matrices of combined motor pattern transition frequencies and corresponding sequence diagram for (A) E. obsoleta, (B) E. guttata and (C) E. vulpina. In matrices, numbers represent actual observed frequencies and numbers in parentheses represent relative deviations. In sequence diagrams, thickness of arrows represents relative deviation (Probability) and circle diameter represents frequency of occurrence.

Broken lines represent transitions with relative deviations of less than 0.5.

Fig. 11. (A) Biting hold as exhibited by E. o. quadrivittata during courtship and (B) Bite-hold as exhibited by E. vulpina during coitus.

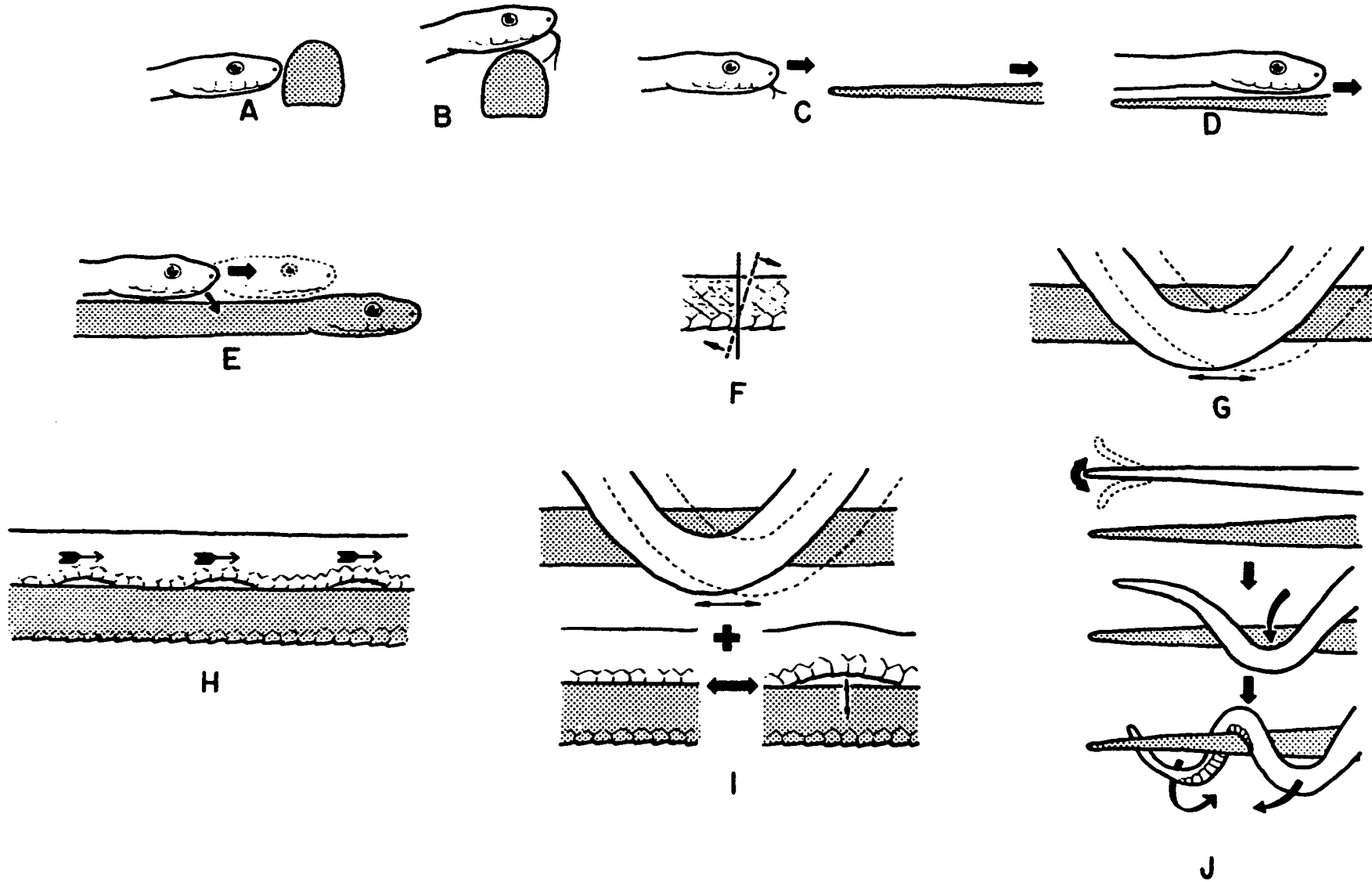

Figure 1

FEMALE FIRST RESPONSE - NEGATIVE TRIALS

A

	OBS	GUT	VUL	Total
JK	15	10	17	42
NR	63	18	3	84
Total	78	28	20	126
% JK	19.2	35.7	85.0	

$X^2 = 31.4$

FEMALE FIRST RESPONSE- POSITIVE TRIALS

B

	OBS	GUT	VUL	Total
JK	4	1	18	23
NR	11	9	3	23
Total	15	10	21	46
% JK	26.6	10.0	85.7	

$X^2 = 20.4$

Figure 2

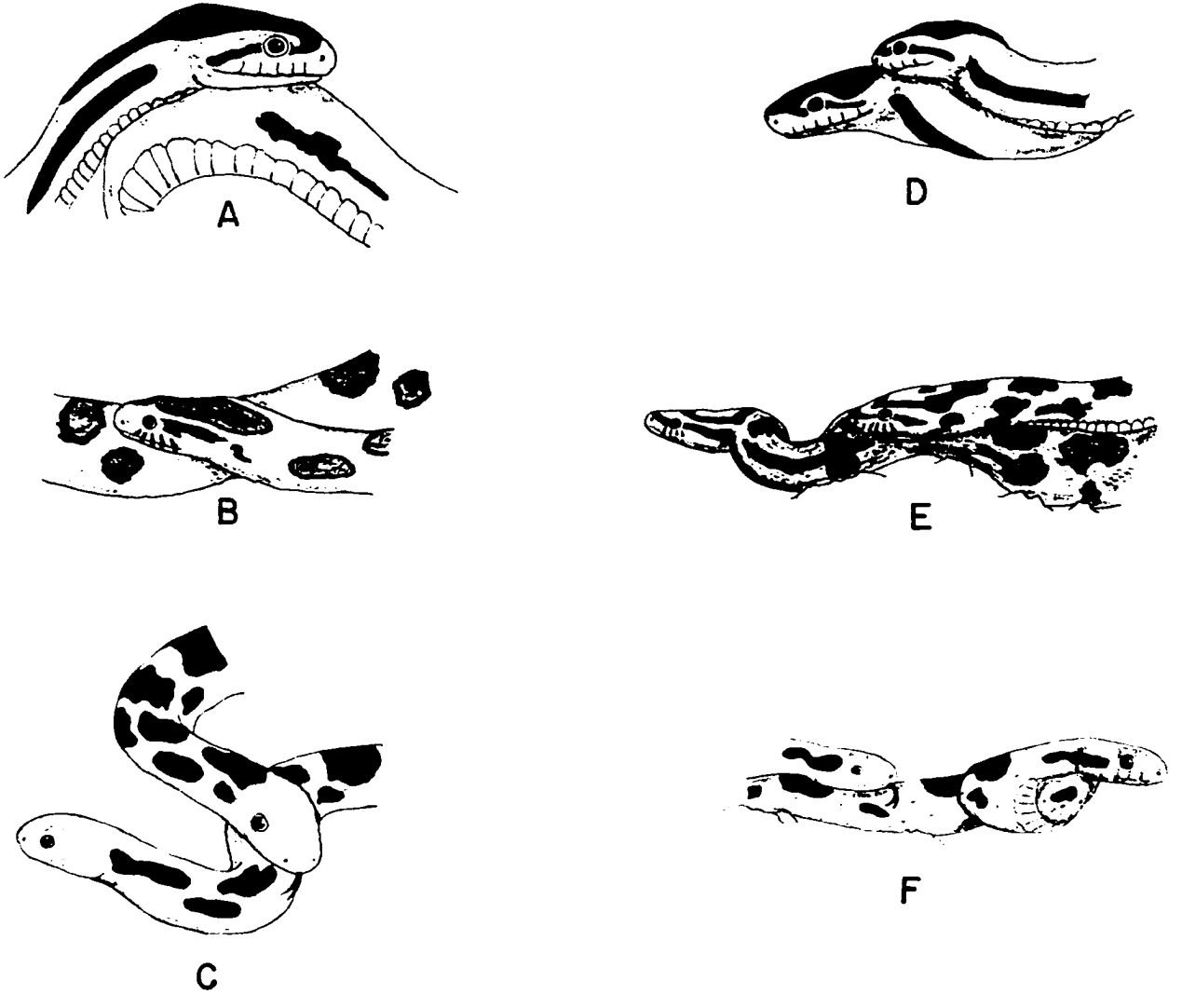

Figure 3

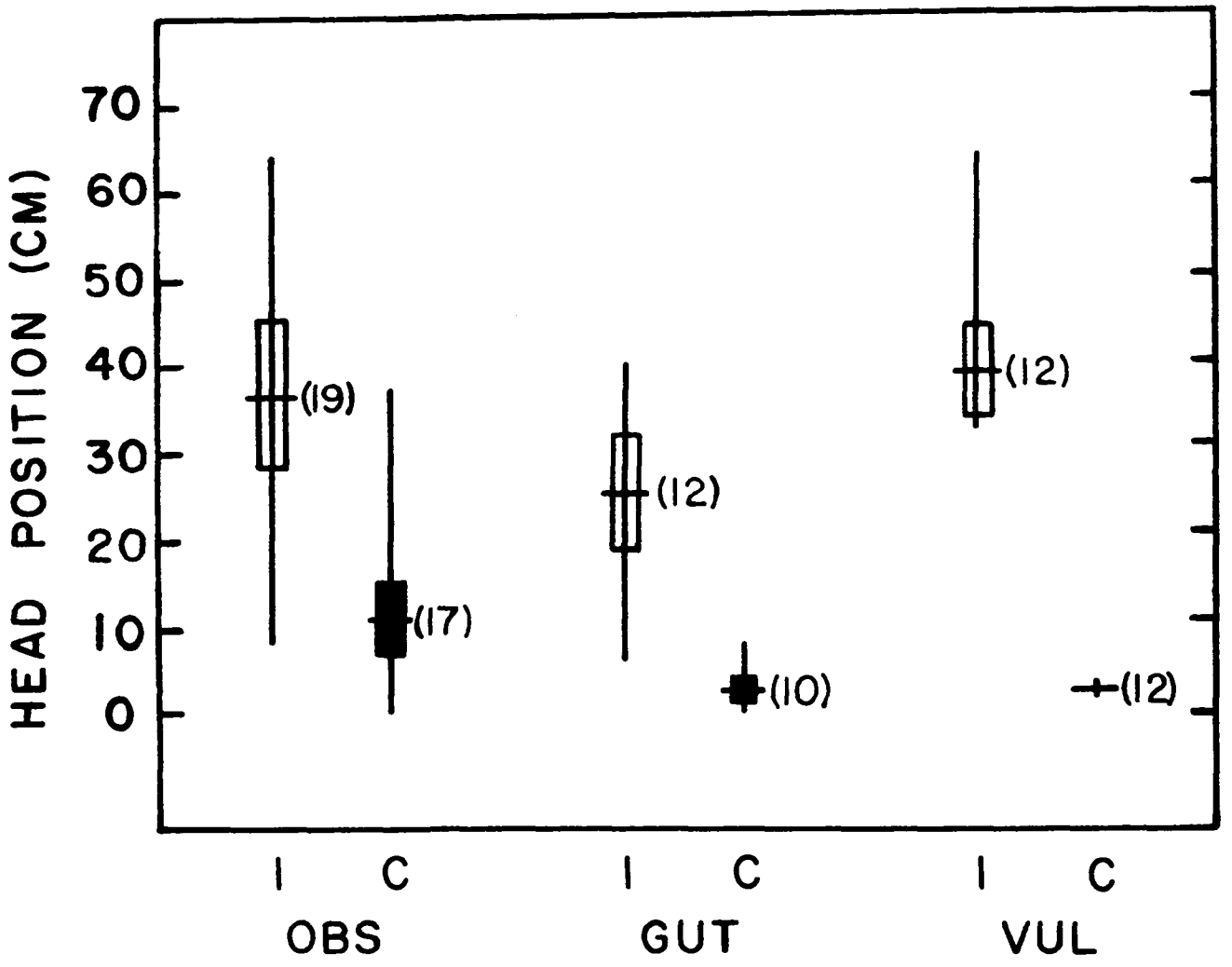
HEAD POSITION (CM)
70
60
50
40
30
20
10
0
(19)
(17)
(12)
(10)
(12)
(12)
I
C
I
C
I
C
OBS
GUT
VUL

Figure 4

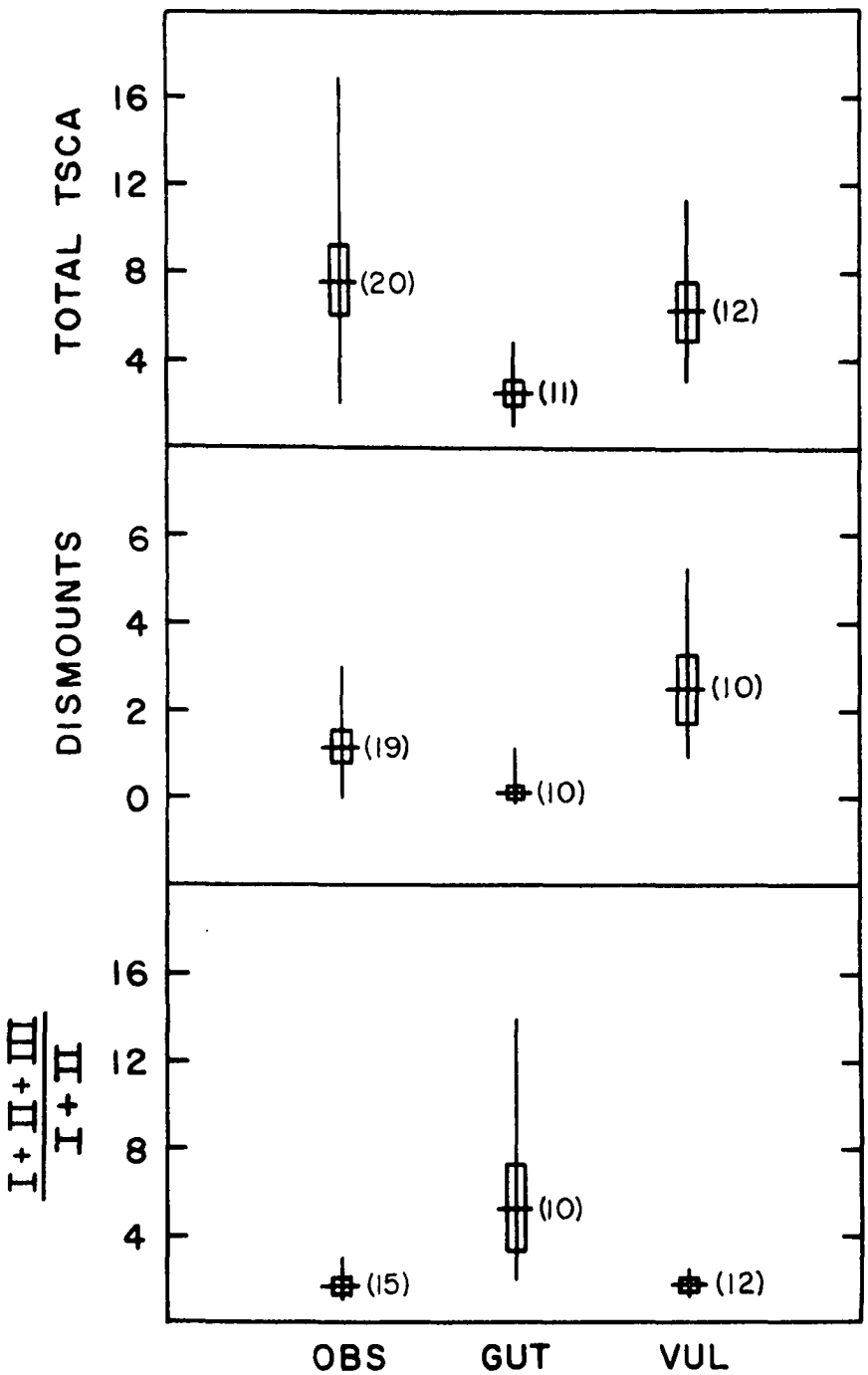
TOTAL TSCA
16
12
8
4
(20)
(11)
(12)
DISMOUNTS
6
4
2
0
(19)
(10)
(10)
I+II+III / I+II
16
12
8
4
(15)
(10)
(12)
OBS
GUT
VUL

Figure 5

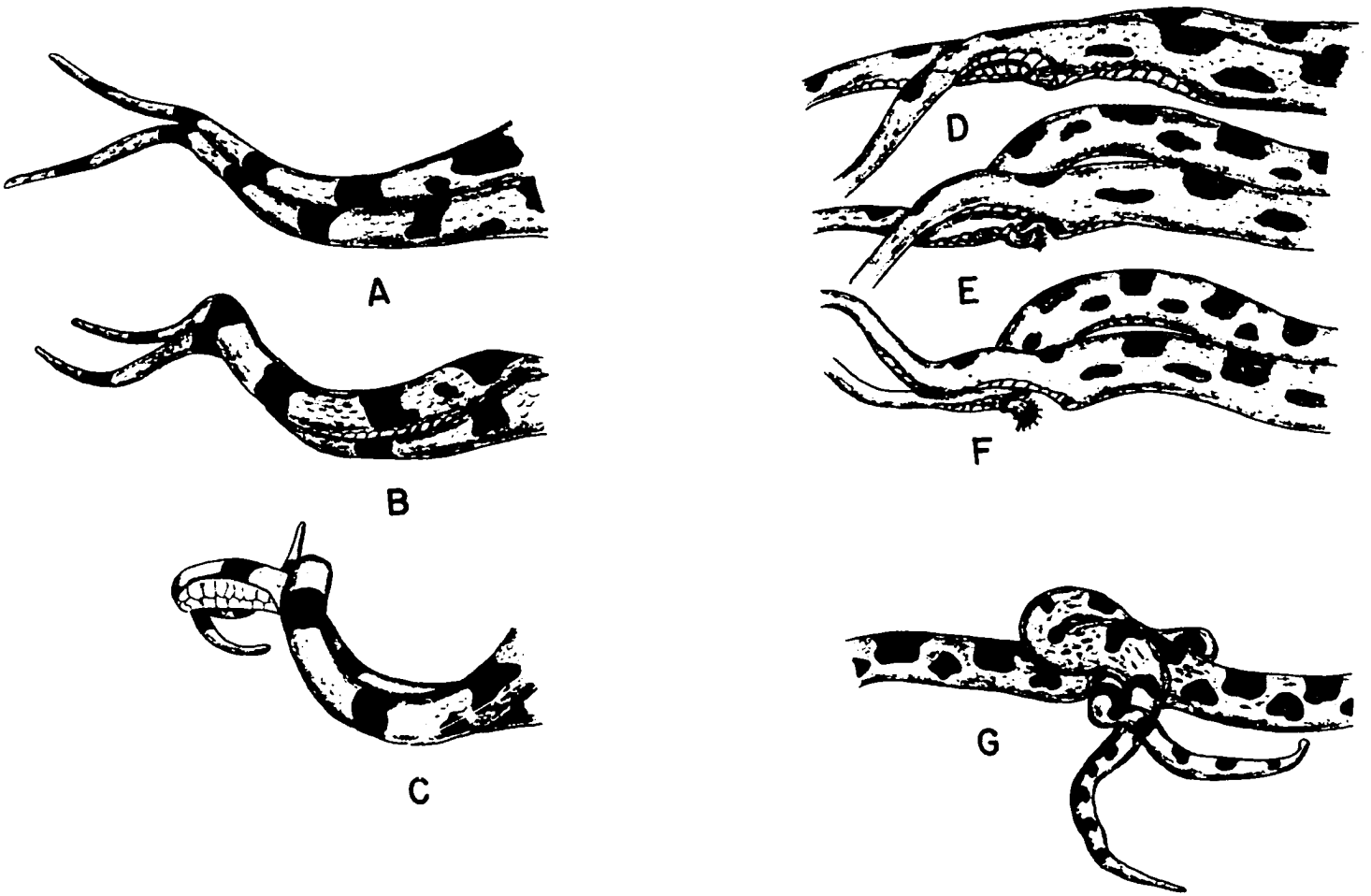

Figure 6

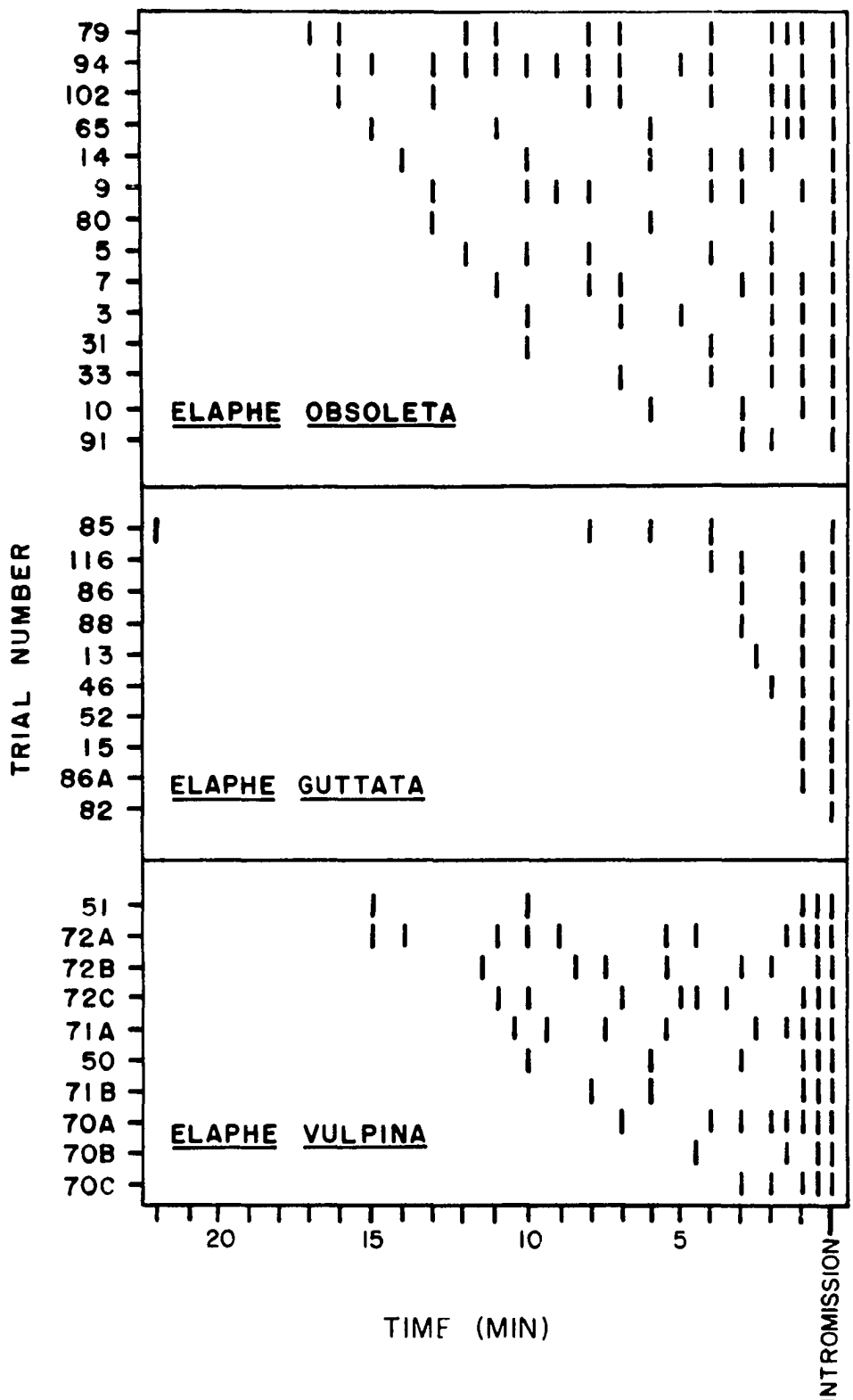
TRIAL NUMBER
79
94
102
65
14
9
80
5
7
3
31
33
10
91
ELAPHE OBSOLETA
85
116
86
88
13
46
52
15
86A
82
ELAPHE GUTTATA
51
72A
72B
72C
71A
50
71B
70A
70B
70C
ELAPHE VULPINA
20
15
10
5
TIME (MIN)
INTROMISSION

Figure 7

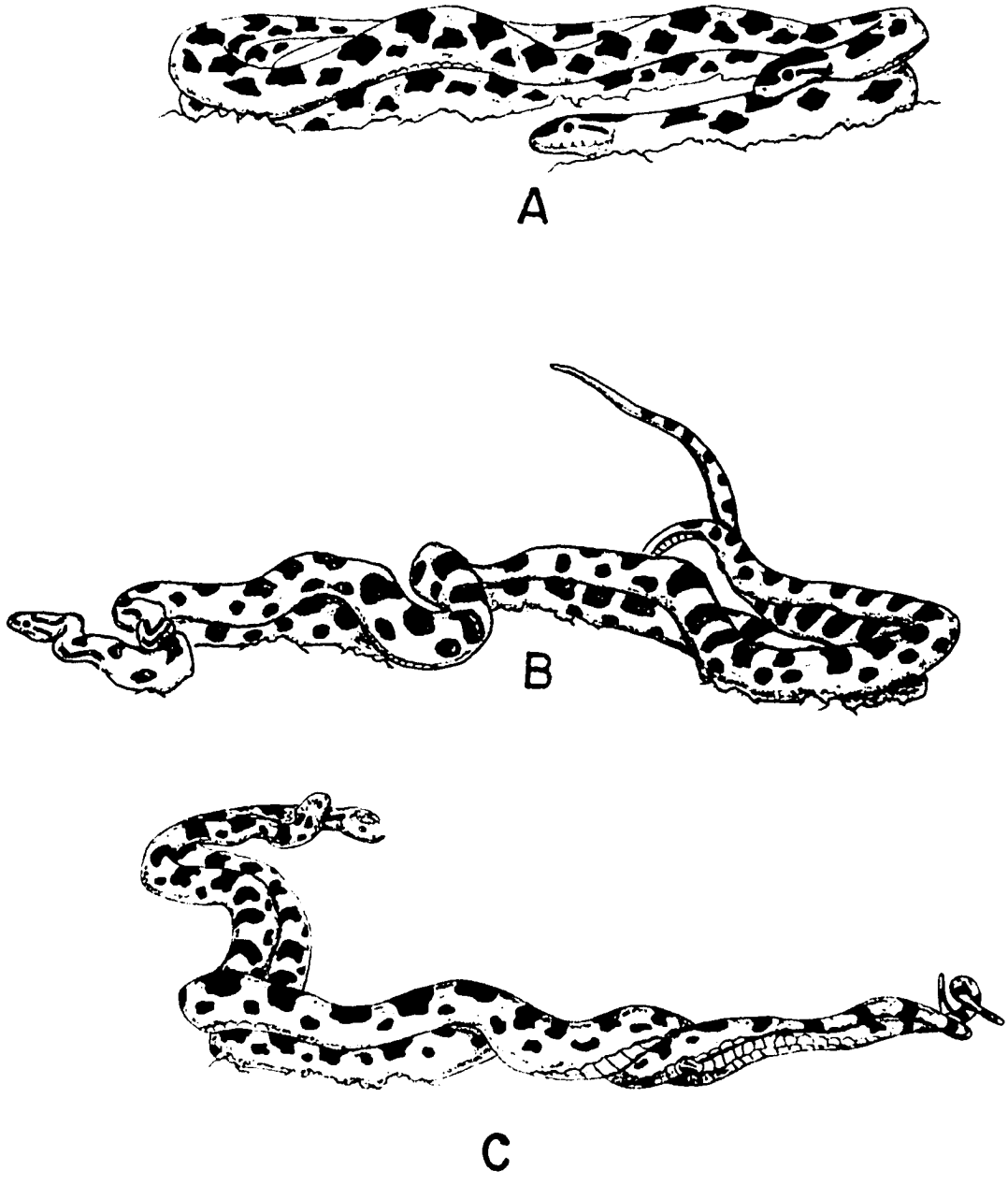

Figure 8

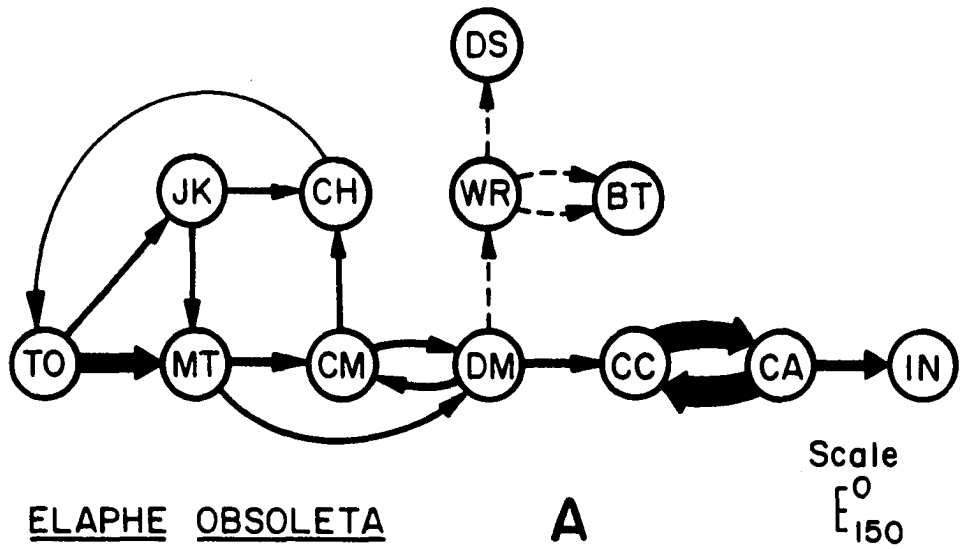

ELAPHE OBSOLETA A

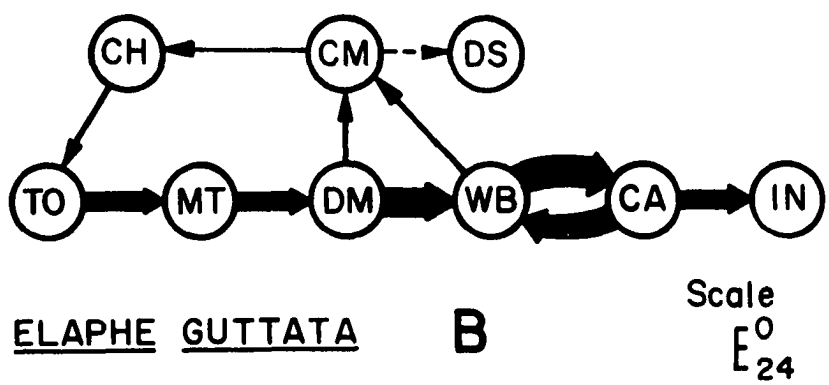

ELAPHE GUTTATA B

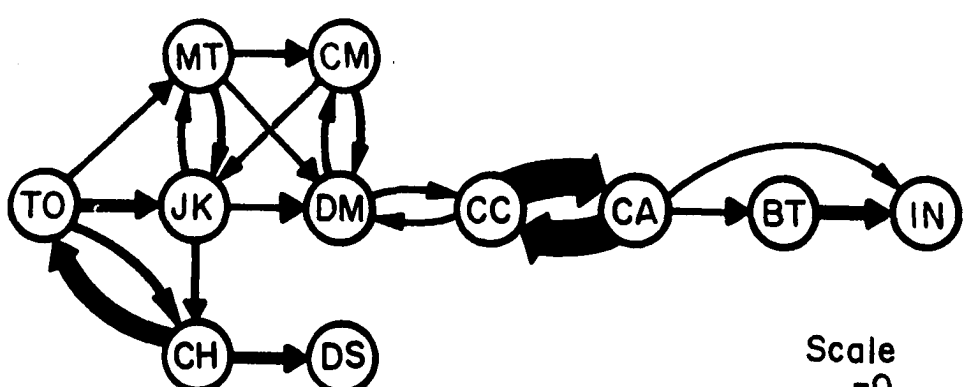

ELAPHE VULPINA C

Figure 9

Succeeding

Preceding	TMT	CCM	DAM	TCA	CCW	Total
TMT	42 (2.7)	12 (.1)	23 (1.1)	0 (-1.0)	6 (-.8)	83
CCM	26 (1.7)	15 (.5)	17 (.8)	3 (-.9)	11 (-.5)	72
DAM	1 (-.9)	20 (1.2)	15 (.7)	5 (-.7)	28 (2.8)	69
TCA	0 (-1.0)	8 (-.5)	1 (-.9)	0 (-1.0)	117 (1.9)	126
CCW	1 (-1.0)	14 (-.4)	11 (-.5)	137 (2.0)	0 (-1.0)	163
Total	70	69	67	145	162	513

A

ELAPHE OBSOLETA

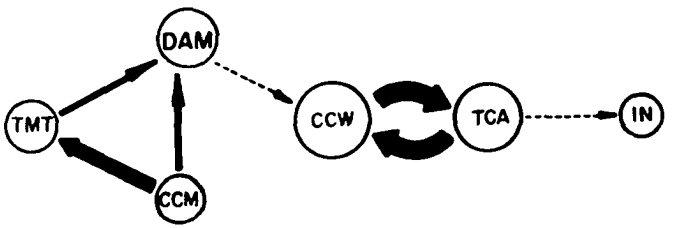

Succeeding

Preceding	TMT	DAM	WRB	TCA	Total
TMT	12 (1.4)	11 (.2)	4 (-.5)	0 (-1.0)	27
DAM	10 (.6)	10 (-.2)	15 (.5)	1 (-.9)	36
WRB	0 (-1.0)	11 (-.9)	0 (-1.0)	24 (2.3)	36
TCA	0 (-1.0)	9 (.1)	16 (1.3)	0 (-1.0)	25
Total	22	41	35	25	124

B

ELAPHE GUTTATA



Succeeding

Preceding	TMT	CCM	JKA	TCA	CCW	Total
TMT	5 (-.3)	15 (1.3)	24 (1.8)	0 (-1.0)	0 (-1.0)	44
CCM	24 (2.8)	2 (-.6)	6 (-.2)	1 (-.9)	4 (-.5)	37
JKA	9 (.4)	12 (1.1)	5 (-.3)	4 (-.6)	8 (-.1)	38
TCA	0 (-1.0)	2 (-.7)	0 (-1.0)	0 (-1.0)	42 (2.9)	44
CCW	0 (-1.0)	2 (-.8)	8 (-.3)	49 (2.4)	0 (-1.0)	59
Total	38	33	43	54	54	222

C

ELAPHE VULPINA

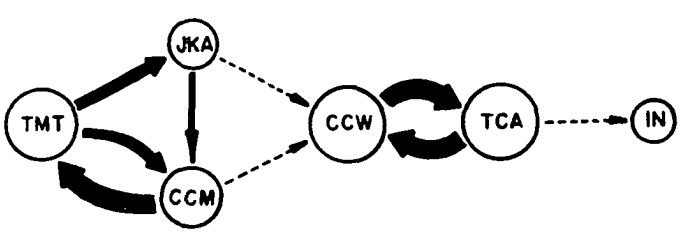

Figure 10

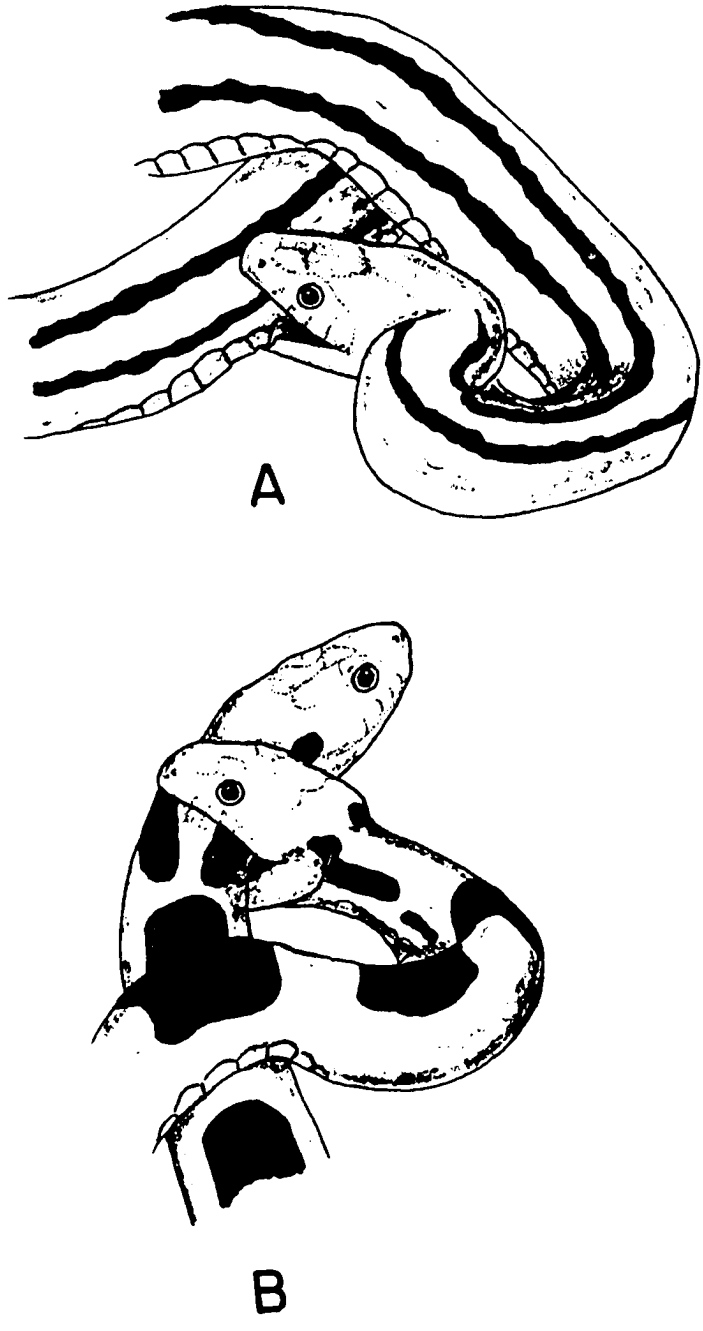

Figure 11

PAPER II

FURTHER ANALYSIS OF REPRODUCTIVE BEHAVIOR IN THE WESTERN FOX SNAKE, ELAPHE V. VULPINA

FURTHER ANALYSIS OF REPRODUCTIVE BEHAVIOR IN THE WESTERN FOX SNAKE, ELAPHE V. VULPINA

JAMES C. GILLINGHAM

Abstract: Courtship and mating behavior of the western fox snake, Elaphe v. vulpina, were studied in captivity. Behavioral sequences were recorded on 16 mm movie film and videotape and these data, along with previously published records, were analyzed quantitatively and qualitatively. Motor pattern sequences were subjected to transition analysis resulting in a sequence diagram and specific differences are compared with the basic colubrid pattern.

Davis (1936) implied a tremendous diversity to the courtship and mating behavior of snakes. The work of Blanchard and Blanchard (1942) on Thamnophis, Shaw (1951) on Pituophis, and Oliver (1956) on Ophiophagus demenstrate that there are definite variations in these action patterns. To fully understand the interrelations of the behavioral plasticity within

a single family alone will require detailed quantitative and qualitative data.

Recently I have described the courtship and mating behavior of the western fox snake, Elaphe v. vulpina (Gillingham, 1974). There is a need for further behavioral quantification, uniformity of terminology and an examination of the colubrid pattern of reproductive behavior in snakes. This paper uses motion picture analysis for scrutinization of many of the rapid motor patterns of courtship, and transition analysis for examination of the observed behavioral sequences.

MATERIALS AND METHODS

Specimens of the western fox snake, E. vulpina, were collected in Columbia Co., Wisconsin during the spring and early summer of 1974 and 1975, and were maintained in an environmental chamber at 25°C and under an LD 12:12 photoperiod. All snakes were housed individually and tested within two weeks after capture.

Testing was accomplished by pairing snakes, one at each end, in a glass-fronted chamber (182X 60 X 60 cm) with a sand substrate. If no courtship activity was observed in 30 min the snakes were removed. If courtship did commence, the sequence was recorded on 16mm color movie film or videotape and I tape-recorded a verbal account.

Seven males averaging 113.0 cm (S-V) and six females averaging 86.5 cm (S-V) were used and three tests were successful and resulted in courtship and mating behavior. The resulting data along with seven successful sequences from an earlier study (Gillingham, 1974) were analyzed for overall patterns and phase lengths. A Vanguard motion

analyzer was used to take detailed measurements from the 16mm film, and drawings were made from this film.

The essential motor patterns of each successful trial were extracted from the tape-recording transcripts and motion picture film and were arranged into sequences. The sequence analysis followed that described by Chatfield and Lemon (1970) in that a matrix of observed transition frequencies was set up and pairs of motor patterns were tested for random deviation with chi square. A sequence diagram was drawn using relative deviations as a measure of transition probability between behavioral motor patterns (Altmann, 1968). An analysis of variance was performed on all other parameters and those data showing significant F values were subjected to the Duncan multiple range test (Steel and Torrie, 1960).

RESULTS

The reproductive behavior of E. v. vulpina can be divided into the three phases defined by Gillingham, et al. (1976): Tactile-Chase (I), Tactile-Alignment (II) and Intromission and Coitus (III). The motor patterns used in the sequence analysis were those defined by Gillingham (1976) and are listed in Table 1.

The initial responses by the female to the male's contact were always forward jerking movements, regardless of the outcome of the trial. Following contact and forward jerking movements, the male mounted the female by raising his head to her dorsum while exhibiting much tongue-flicking. The forward jerking movements averaged 1.6/sec

for both males and females (Table 2). With his head positioned atop the female the male began dorsal advance movements, bringing more and more of his trunk onto her dorsum. At this time the male held his chin tightly adpressed to her dorsum and again showed much tongue-flicking.

During 90% of the trials the females responded to this behavior by fleeing. Loss of contact by the male resulted in a chase; when she stopped, contact was regained and the male continued as before. If the male was able to maintain dorsal contact with the female a chase-mount ensued.

Toward the end of Phase I the male began to exhibit an anteriorly directed series of ventral and ventrolateral contractions (caudocephalic waves) particularly well-defined in areas of direct contact with the female's trunk. The caudocephalic waves and tongue-flicks in Phase I averaged 1.7 and 1.9/sec, respectively (Table 2). The male initially contacted the female at a point an average of 37cc (30.5-61; S.E.=1.1; N= 12) behind her head. The entire phase lasted an average of 12.5 min (Table 2) from courtship initiation until the first copulatory attempt.

Phase II began with the first tail-search copulatory attempt (TSCA) and ended with hemipenal penetration. Lasting an average of 9.9 min (Table 2) Phase II was composed primarily of a series of TSCA's with intermittent caudocephalic waves, some jerking and many volleys of tongue-flicks.

The TSCA, described in detail by Gillingham et al. (1976), was basically a maneuver by the male to bring his vent into juxtaposition with that of the female (Fig. 1). After an average of 6.2 such attempts

(range=3.0-11.0, S.E.=0.67, N=12), the female opened her cloaca permitting penetration and intromission was achieved. Early TSCA's were quite irregularly spaced allowing intermittent rest periods of varied length (Fig. 2). However, just prior to intromission they became quite uniformly spaced.

The caudocephalic waves and tongue-flicks exhibited in this phase were at average rates of 1.4 and 2.7/sec respectively (Table 2). The former is lower than Phase I ($P<0.01$) while the latter is higher ($P<0.01$). In all but one instance the male bit and held on to the female behind the head just prior to intromission.

Phase III began with intromission and continued until separation occurred, an average of 20.3 min later (Table 2). Coitus was characterized by the male grasping the female's neck and slowly moving their tails back and forth. The male's head was always 3 cm behind the female's and no tongue-flicks were observed at this time.

When separation occurred, the snakes moved away from one another, and the male pulled his hemipenis from the cloaca of the female. In all but two cases the female apparently initiated the movement and often dragged the male some distance before separation occurred.

I recorded 10 motor pattern sequences from the successful trials. Certain closely related motor patterns were combined to increase the expected transition values to levels of five or greater as follows: touch with mount (TMT), chase with chase-mount (CCM), and jerk with dorsal advance movement (JKA). Caudocephalic waves and TSCA remained as separate entities, and a matrix of behaviors "preceding" and "follow-

ing" was constructed (Fig. 3A).

The relative deviation of each motor pattern transition pair was calculated and these values, a measure of transition probability, were used to construct the sequence diagram (Fig. 3B), illustrating the overall courtship and mating behavior of E. v. vulpina.

DISCUSSION

Gillingham (1974) divided fox snake courtship and copulatory behavior into the following categories: chasing, tactile and mounting, and biting and intromission. Although these divisions were adequate for E. v. vulpina, they are not general enough for incorporation of other species or genera within the Colubridae. The phases of Gillingham, et al. (1976) better fit the colubrid pattern.

Initial contact between two fox snakes (Fig. 4A) was characterized by forward-jerking movements. Forward-jerking behavior by the female at courtship initiation did not have an effect on the outcome of the trial, since it occurred in 85.7% of positive trials and 85.0% of negative trials. If this motor pattern is communicative, it probably is related to species or individual recognition as it apparently has no bearing on female receptivity.

Chasing behavior played a dominant role in Phase I and also has been observed in E. v. vulpina by Simonson (1951) and Gillingham (1974). In the present study I have shown that both the chase and chase-mount motor patterns occur. When the female ceased fleeing, the male began to advance dorsally (DAM) keeping his chin tightly adpressed to her dorsum

(Fig. 4B). This progression was always toward the head of the female as the male made first contact at an average distance of 37cm behind the female's head and terminated (with neck-biting) immediately behind her head.

The decrease in caudocephalic wave rate from Phase I to Phase II and the increase in tongue-flick rate over the same time period is difficult to interpret. It is apparently not due to an increase in bodily activity, since the former decreases and the latter increases.

The tail-search copulatory attempts (TSCA's) were almost identical to those described by Gillingham (1976) for E. obsoleta and E. guttata but differ from that of Pituophis m. melanoleucus (Shaw, 1951). In Pituophis there is a "tail-raising" component to the activily that is lacking in Elaphe. Early in Phase II the TSCA's were spaced irregularly but became more uniform near intromission, with progressively shorter intervals between them. Caudocephalic waves were always exhibited during these periods and were particularly apparent where the male's venter was in contact with the female.

In all but one case, just prior to the final TSCA and subsequent intromission, the male bit the female behind the head and held her that way throughout coitus. This bite-hold was also observed by Davis (1936), Carpenter (1947) and Simonson (1951). The resulting coital position (Fig. 4C) found the male's trunk loosely draped over the female, her neck in his grasp and the tails of both snakes moving slowly back and forth. Coitus (Phase III) averaged 20.3 min (Table 2) and this is in agreement with the 20±3.5 min duration observed by Simonson (1951).

Separation was usually accomplished when one or both snakes crawled away. The resulting stress on the hemipenal-cloacal union was evidently responsible for complete separation.

The sequence diagram resulting from the transition matrix (Fig. 3A,B) has two major components, each of which exhibits a high probability (expressed as relative deviation) for cycling. The first cycle includes the TMT, JKA and CCM combined motor patterns and corresponds to the Phase I division. The second cycle is between the caudocephalic waves (CCW) and TSCA (TCA) motor patterns and seems to correspond to the Phase II division. The low probability for the transition between Phase I and Phase II is due to the fact that this connection was only made once in any given trial. The significant chi square value indicates that these motor patterns do not occur at random and that a definite sequence exists for the courtship and mating behavior of the western fox snake.

LITERATURE CITED

Altmann, S. A. 1968. Sociobiology of rhesus monkeys III. The basic communication network. Behaviour 32:17-32.

Blanchard, F. N. and F. C. Blanchard. 1942. Mating of the garter snake Thamnophis sirtalis sirtalis (Linnaeus). Papers, Mich. Acad. Sci., Arts and Let. 27:215-234.

Carpenter, C. C. 1947. Copulation of the fox snake. Copeia 1947:275.

Chatfield, C. and R. E. Lemon. 1970. Analysing sequences of behavioural events. J. Theor. Biol. 29:427-445.

Davis, D. D. 1936. Courtship and mating behavior in snakes. Field Mus. Nat. Hist. Zool. Series. 20:257-290.

Gillingham, J. C. 1974. Reproductive behavior of the western fox snake, Elaphe v. vulpina (Baird and Girard). Herpetologica 30:309-313.

Gillingham, J. C., C. C. Carpenter, B. J. Brecke and J. B. Murphy. 1976. Courtship and copulatory behavior of the Mexican milksnake, Lampropeltis triangulum sinaloae (Colubridae). Southwest. Nat. (submitted for publication).

Gillingham, J. C. 1976. Reproductive behaviour of the rat snakes of eastern North America, genus Elaphe. Animal Behaviour (submitted for publication).

Oliver, J. A. 1956. Reproduction in the king cobra, Ophiophagus hannah Cantor. Zoologica 41:145-152.

Shaw, C. E. 1951. Male combat in American colubrid snakes with remarks on combat in other colubrid and elapid snakes. Herpetologica 7:149-168.

Simonson, W. E. 1951. Courtship and mating of the fox snake, Elaphe vulpina vulpina. Copeia 1951:309.

Steel, R. G. D. and J. H. Torrie. 1960. Principles and procedures in statistics. McGraw-Hill, New York. 481 pp.

Table 1.--Uncombined and combined motor patterns with symbols used in sequence transition analysis.

	Motor Pattern	Symbol
Uncombined		
(1)	Touch	TO
(2)	Mount	MT
(3)	Chase	CH
(4)	Chase-Mount	CM
(5)	Dorsal-Advance Movement	DM
(6)	Forward-Jerking	JK
(7)	Caudocephalic Waves	CC
(8)	Tail-Search Copulatory Attempt	CA
(9)	Intromission	IN
(10)	Biting	BT
Combined		
(1)	Touch-Mount	TMT
(2)	Chase-Chase-Mount	CCM
(3)	Forward-Jerking, Dorsal Advance	JKA
(4)	Caudocephalic Waves	CCW
(5)	Tail-Search Copulatory Attempt	TCA

Table 2.--Mean, range, standard error and sample size of four parameters of the mating behavior of *E. v. vulpina*.

	$\bar{X}$	Range	S.E.	N
Forward Jerking sec^{-1}				
males	1.6	1.5-2.0	0.05	10
Females	1.6	1.5-2.0	0.06	8
Caudocephalic waves sec^{-1}				
Phase I	1.7	1.2-2.2	0.10	12
Phase II	1.4	1.0-1.9	0.07	13
Tongue-flicks sec^{-1}				
Phase I	1.9	1.2-3.0	0.087	25
Phase II	2.7	1.9-4.1	0.15	19
Phase Length (min)				
Phase I	12.5	9.0-17.0	0.73	12
Phase II	9.9	8.0-16.0	0.68	12
Phase III	20.3	15.0-26.0	0.87	12

Figure Legends

Fig. 1.--Sketches of the tail-search copulatory attempt in E. v. vulpina. Top: tails parallel. Center: anterior-dorsal loop of male's tail over female's tail. Lower: posterior-ventral loop pushed beneath female's tail.

Fig. 2.--Tail-search copulatory attempts against time (min) for E. v. vulpina. Each vertical line represents one TSCA.

Fig. 3--(A) Matrix of combined motor pattern transition frequencies for E. v. vulpina. Numbers represent actual observed frequencies and numbers in parentheses represent relative deviations (see text). (B) Sequence diagram for E. v. vulpina. Thickness of arrows represents relative deviation (probability) and circle diameter is equivalent to frequency of occurrence. Broken lines represent relative deviatinns less than 0.5.

Fig. 4--(A) Initial contact of female by male. (B) Dorsal-advance movement by male on female's dorsum. (C) coital position.



Figure 1

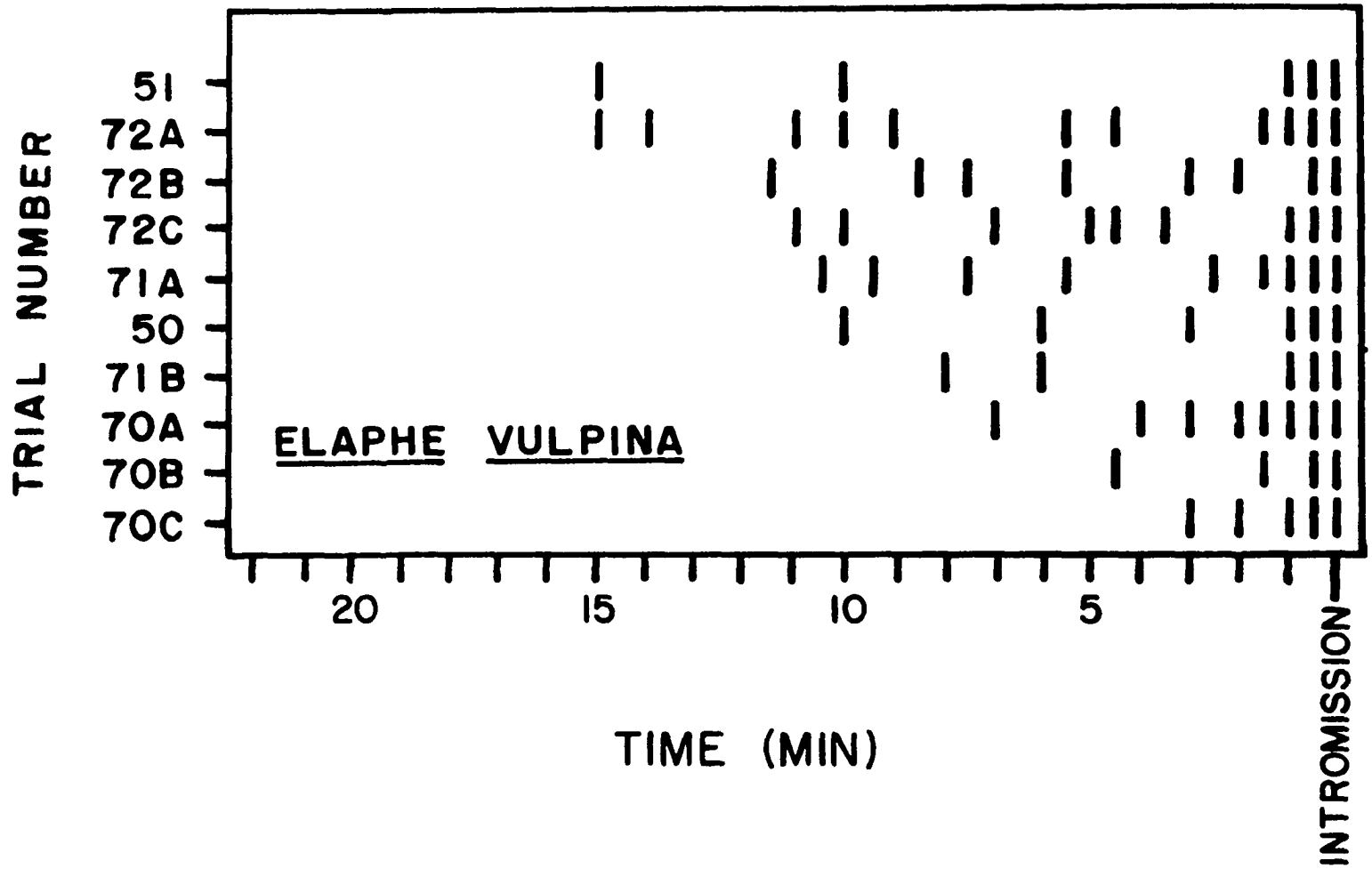
TRIAL NUMBER
51
72A
72B
72C
71A
50
71B
70A
70B
70C
ELAPHE VULPINA
20
15
10
5
INTROMISSION
TIME (MIN)

Figure 2

Preceding \ Succeeding	TMT	CCM	JKA	TCA	CCW	Total
TMT	5 (-.3)	15 (1.3)	24 (1.8)	0 (-1.0)	0 (-1.0)	44
CCM	24 (2.8)	2 (-.6)	6 (-.2)	1 (-.9)	4 (-.5)	37
JKA	9 (.4)	12 (1.1)	5 (-.3)	4 (-.6)	8 (-.1)	38
TCA	0 (-1.0)	2 (-.7)	0 (-1.0)	0 (-1.0)	42 (2.9)	44
CCW	0 (-1.0)	2 (-.8)	8 (-.3)	49 (2.4)	0 (-1.0)	59
Total	38	33	43	54	54	222

A

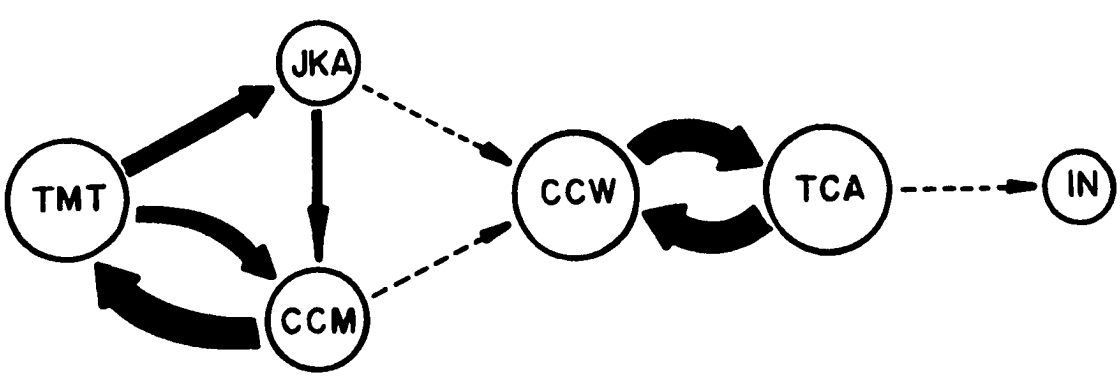

B

Figure 3

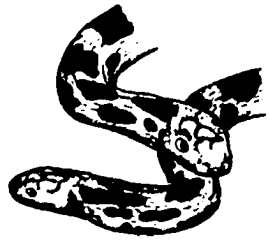

A



B

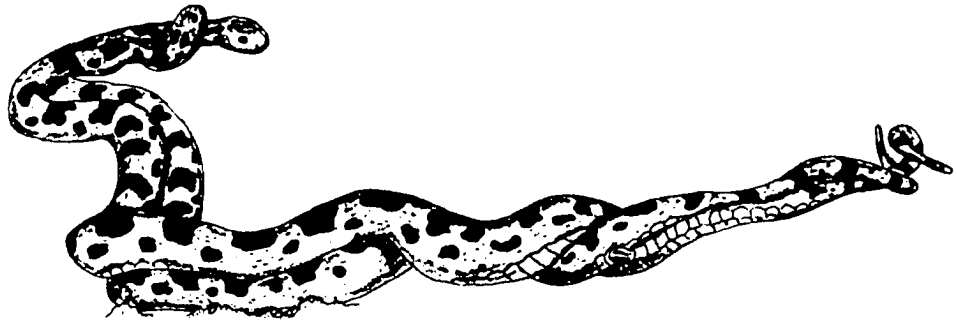

C

Figure 4