## INFORMATION TO USERS

This dissertation was produced from a microfilm copy of the original document. While the most advanced technological means to photograph and reproduce this document have been used, the quality is heavily dependent upon the quality of the original submitted.

The following explanation of techniques is provided to help you understand markings or patterns which may appear on this reproduction.

1. The sign or "target" for pages apparently lacking from the document photographed is "Missing Page(s)". If it was possible to obtain the missing page(s) or section, they are spliced into the film along with adjacent pages. This may have necessitated cutting thru an image and duplicating adjacent pages to insure you complete continuity.

2. When an image on the film is obliterated with a large round black mark, it is an indication that the photographer suspected that the copy may have moved during exposure and thus cause a blurred image. You will find a good image of the page in the adjacent frame.

3. When a map, drawing or chart, etc., was part of the material being photographed the photographer followed a definite method in "sectioning" the material. It is customary to begin photoing at the upper left hand corner of a large sheet and to continue photoing from left to right in equal sections with a small overlap. If necessary, sectioning is continued again — beginning below the first row and continuing on until complete.

4. The majority of users indicate that the textual content is of greatest value, however, a somewhat higher quality reproduction could be made from "photographs" if essential to the understanding of the dissertation. Silver prints of "photographs" may be ordered at additional charge by writing the Order Department, giving the catalog number, title, author and specific pages you wish reproduced.

**University Microfilms**

300 North Zeeb Road
Ann Arbor, Michigan 48106

A Xerox Education Company

Downloaded from SHAREOK. Persistent Handle URL: https://hdl.handle.net/11244/3438

73-9165

NORTON Jr., Tom Dent, 1943-
ON SPIRAL OR FLAT ELLIPTICAL GALAXIES AS GRAVITATIONAL LENSES.

The University of Oklahoma, Ph.D., 1972
Astrophysics

University Microfilms, A XEROX Company, Ann Arbor, Michigan

THIS DISSERTATION HAS BEEN MICROFILMED EXACTLY AS RECEIVED.

THE UNIVERSITY OF OKLAHOMA

GRADUATE COLLEGE

# ON SPIRAL OR FLAT ELLIPTICAL GALAXIES AS GRAVITATIONAL LENSES

A DISSERTATION

SUBMITTED TO THE GRADUATE FACULTY

in partial fulfillment of the requirements for the

degree of

DOCTOR OF PHILOSOPHY

BY

TOM DENT NORTON JR.

Norman, Oklahoma

1972

ON SPIRAL OR FLAT ELLIPTICAL GALAXIES

AS GRAVITATIONAL LENSES

APPROVED BY

Ronald Kantowski

Jack Cohn

Ronald R. Bowrasser

S. E. Babb, Jr.

Ting K. Pan

DISSERTATION COMMITTEE

PLEASE NOTE:

Some pages may have

indistinct print.

Filmed as received.

University Microfilms, A Xerox Education Company

## ACKNOWLEDGEMENTS

If there be any merit in these pages, it is because of Dr. Ronald Kantowski's guidance. For this and for his seemingly infinite store of patience and optimism I now extend my gratitude.

In addition I would like to acknowledge the effort extended in my behalf by the members of my committee, Dr. Jack Cohn, Dr. Stanley E. Babb, Dr. Ronald Bourassa, and Dr. T. K. Pan.

Also, I would like to thank my parents for their support throughout my academic years. A special measure of gratitude belongs to my wife, Sue and my daughter, Sonja for their patience with my impatience and for typing the manuscript.

I am also indebted to NASA for a Traineeship.

TABLE OF CONTENTS


| | | Page |
|---|---|---|
| ACKNOWLEDGEMENTS | | iii |
| LIST OF TABLES | | vi |
| LIST OF ILLUSTRATIONS | | vii |
| Chapter | | |
| I. | INTRODUCTION | 1 |
| II. | GEOMETRY OF THE GRAVITATIONAL LENS PHENOMENA | 4 |
| | Geometrical Relations | 4 |
| | The Friedmann Models | 6 |
| | Geometrical Relations in a Friedmann Model with $q_o=\frac{1}{2}$ | 9 |
| III. | A CYLINDRICALLY SYMMETRIC MODEL FOR THE DEFLECTING MASS | 12 |
| | Schmidt's Model of the Galaxy | 12 |
| | Deflector Model to be Used in the Calculations | 15 |
| IV. | ASSUMPTIONS USED TO DERIVE THE LIGHT BENDING FORMULAE | 17 |
| | The linearized Theory of General Relativity | 18 |
| | Criteria for a Weak Field | 22 |
| V. | THE LIGHT BENDING FORMULAE FOR A RING | 25 |
| | Derivatives of Bending Angles for a Ring | 29 |
| VI. | THE LIGHT BENDING FORMULAE FOR A FLAT CIRCULAR PLATE | 32 |
| | Mass Density of the Plate Model | 32 |
| | Light Passing Through the Rotational Axis of the Plate | 34 |
| | Derivatives of the Bending Angle for Light Passing Outside the Plate | 36 |

TABLE OF CONTENTS (Cont'd.)


The Bending Angle for Light Passing Through the Plate. . . . . 36
Derivatives of Bending Angle for Light Passing Through the Plate. . . . . 39

Light Meeting a Radial Line of the Plate Orthogonally . . . 39

The Bending Angle for Light Passing Outside the Plate. . . . . 40
The Bending Angle for Light Passing Through the Plate. . . . . 41

VII. THE BRIGHTENING OF IMAGES DUE TO FLAT PLATE DEFLECTORS. . . 43

Amplification Factor for Imaging Rays Passing Through the Rotational Axis . . . . . 45

Amplification Factors in the Case of Plate Deflectors . . . . . 48

Imaging Rays Passing Through the Semi-Major Axis of the Deflector . . . . . 49

VIII. PROBABILITY OF SEEING DOUBLE IMAGES . . . . . 51

Approximate Expression for Fraction of Sources Seen as Double. . . . . 57

IX. NUMERICAL DATA. . . . . 60

X. SUMMARY . . . . . 69

BIBLIOGRAPHY . . . . . 72

APPENDIX . . . . . 74

## LIST OF TABLES

Table | Page

1. Amplification factors and angular separations of double images . . . . . 66

## LIST OF ILLUSTRATIONS


| Figure | | Page |
|---|---|---|
| 1. | The gravitational lens situation in which two images of the source are formed. . . . . | 1 |
| 2. | Geometry of the gravitational lens phenomena. . . . . | 5 |
| 3. | Oblate spheriod . . . . . | 13 |
| 4. | $\rho$ vs. a . . . . . | 16 |
| 5. | Light passing near a ring of radius, a, and mass M(a)da . . . | 26 |
| 6. | Light passing through the rotational axis and outside the flat plate. . . . . | 35 |
| | Light passing through the rotational axis and through the flat plate. . . . . | 35 |
| 7. | Light passing through an oblate spheriod at angle, $\gamma$. . . . . | 38 |
| | Light passing through an oblate spheriod for the case, $\gamma=0$ . . . . . | 38 |
| 8. | Light meeting a radial line of the ring orthogonally. . . . . | 40 |
| 9. | Bundle of light rays passing near a deflector . . . . . | 44 |
| 10. | Bundle of light rays passing throught the rotational axis of a deflector . . . . . | 46 |
| 11. | Overlapped area . . . . . | 52 |
| 12. | P vs. $Z_s$ using Eq. (VIII-3) . . . . . | 59 |
| 13. | P vs. $Z_s$. . . . . | 63 |
| 14. | P vs. $Z_s$. . . . . | 64 |
| 15. | P vs. $Z_s$. . . . . | 65 |

# CHAPTER I

## INTRODUCTION

Following the initial quantitative analysis by Einstein in 1936, an extensive body of literature on the gravitational lens phenomena has appeared[1-17]. Briefly, this phenomena can be described as follows. If a massive object (often referred to as a lens or deflector) is suitably positioned between an observer and a source of electromagnetic radiation, two particularly interesting things may occur. First of all, two images of the source may be observed, and secondly the luminosity of the source may be larger than it would be in the absence of the deflector. The situation is depicted in Fig. 1.

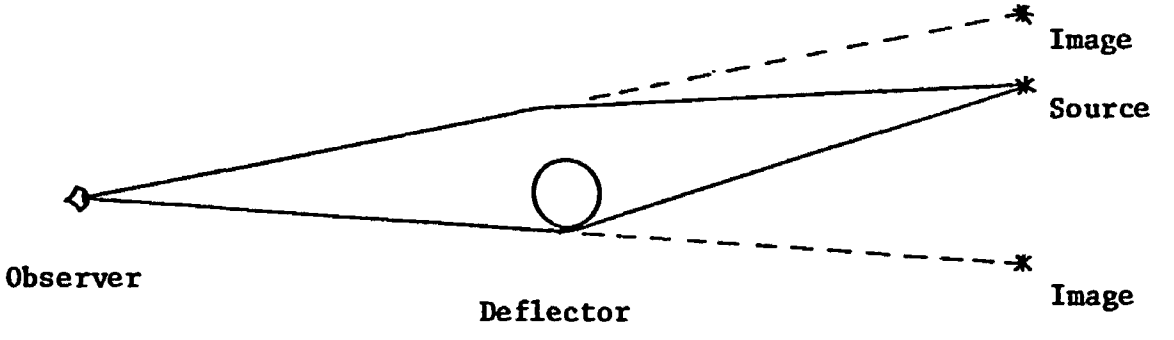


Figure 1. The gravitational lens situation in which two images of the source are formed.

Situations have been investigated in which the deflector and source are stars[1,6,9,10,11], the deflector and source are galaxies[2,3,5,7,8,10,11,12,15,17], the deflector is a galaxy and the source a supernova or a quasar[11], and various other combinations[5,12,16]. However, in all cases (to my knowledge) both deflector and source have been assumed to be spherically symmetric bodies. This is of course very reasonable for the situation in which the deflecting body is a star, but may not be so reasonable when the deflector is taken to be a galaxy since the large majority of galaxies are flagrantly non-spherical. However, the majority of galaxies, being either spiral or elliptical in their general structure, do exhibit a high degree of cylindrical symmetry. It would therefore be of interest to introduce a cylindrically symmetric deflector into the mathematical analysis of the gravitational lens phenomena and to see whether any interesting observable results ensue.

It will be the purpose of this paper to carry out this last stated course of action. The model for the deflectors is to be chosen so as to provide a reasonable representation of a very flat elliptical or a spiral galaxy, but is to be simple enough to allow a surveyable analysis of the lens phenomena associated with such an object. From this analysis, an expression for the increase in luminosity of the images of the source is to be obtained, and in cases where the double imaging phenomena occurs, an expression for the angular separation of the two images as seen by the observer is to be obtained. Finally, an

expression for the fraction of sources, located at a particular redshift from the observer, which would be expected to exhibit double images is to be obtained. These three expressions should then be sufficient to discuss the observability of a double image event. In particular, the situation in which the sources are quasi-stellar objects is to be examined.

## CHAPTER II

## GEOMETRY OF THE GRAVITATIONAL LENS PHENOMENA

A brief overall picture of the lens phenomena will now be presented, and some useful relations between intrinsic geometrical quantities will be written down for later use.

### Geometrical Relations

Let "O", "d", "S" denote observer, deflecting mass, and source respectively, and let $D_{od}$, $D_{os}$, $D_{ds}$ be the distances from observer to deflector, from observer to source, and from deflector to source respectively. These are distances by apparent size - i.e., if dA is the cross-sectional area of a disc which is normal to a line (null geodesic) drawn from the disc to an observer and $d\Omega$ is the solid angle subtended by dA at the observer, $d\Omega = dA/D^2$. Let "h" denote the minimum light ray to deflector distance (impact parameter), and let "y" be the perpendicular distance from the source to the line drawn through observer and deflector. Let "$\alpha$" denote the total angle thru which light is deflected as it passes near d, and let "$\beta$" denote the angular separation of the deflector and the image of the source as seen by the observer. By consulting Fig. 2, and assuming that the angles, $\alpha$, and $\beta$, are small several relations between these quantities are apparent.

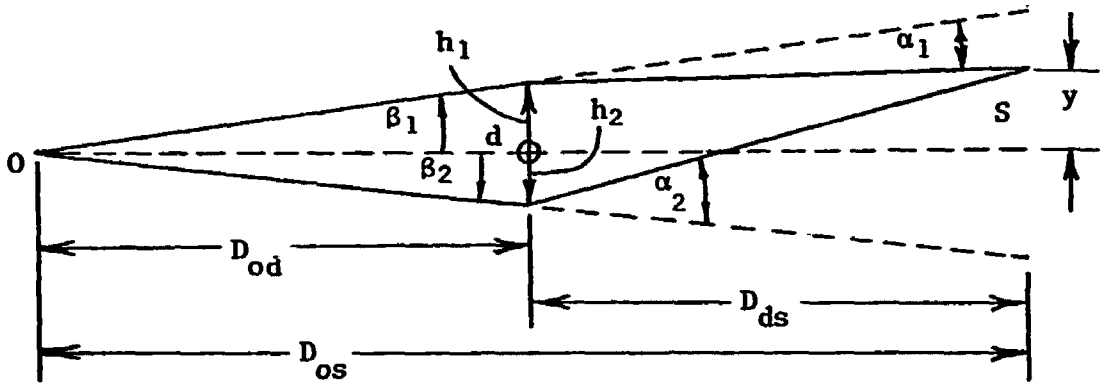


Figure 2. Geometry of the gravitational lens phenomena.

In general, "y" can be expressed as

$$y = \frac{h_1 D_{os}}{D_{od}} - \alpha_1 D_{ds} \quad , \tag{II-1}$$

and in the case depicted in Fig. 2 where two light paths exist between source and observer, also as

$$y = -\frac{h_2 D_{os}}{D_{od}} + \alpha_2 D_{ds} \quad . \tag{II-2}$$

Obvious expressions for $\beta$ are

$$\beta_1 = \frac{h_1}{D_{od}} \quad , \tag{II-3}$$

and

$$\beta_2 = \frac{h_2}{D_{od}} \quad . \tag{II-4}$$

The light deflection angles, $\alpha_1$ and $\alpha_2$, depend only upon the intrinsic properties of the deflector, mass, dimensions, shape etc., and upon the orientation of the deflector with respect to the passing light ray. The distances, $D_{od}$, $D_{os}$, $D_{ds}$, however depend upon the particular cosmological model chosen to represent the universe.

## The Friedmann Models

Only Friedmann Cosmological Models with zero pressure and cosmological constant will be considered here - a brief review of which will now be presented. The line element for such models can be written in the form,

$$ds^2 = -c^2dt^2 + R^2(t)\left\{\frac{dr^2}{1-Kr^2} + r^2(\sin^2\theta d\phi^2 + d\theta^2)\right\} \quad ,$$

where K= +1, -1, 0, and R(t) satisfies the Friedmann equation,

$$\left(\frac{dR}{dt}\right)^2 + c^2K = \frac{8\pi G}{3}\rho_o R_o^3 \frac{1}{R} \quad .$$

The subscript, zero, means that the subscripted quantity is to be evaluated at the present time and the quantity "$\rho$" is the mean mass density in the universe. From the conservation law for energy-

momentum ($T^{ab}{}_{;b}=0$), it follows that the time-dependence of $\rho$ is given by

$$\rho = \frac{\rho_o (R_o)^3}{R^3} \quad ,$$

where $\rho_o=\rho(t=0)$ is the mean mass density of the universe at the present epoch. From the definitions of the Hubble Constant, $H_o$, and the deceleration parameter, $q_o$,

$$H_o \equiv \frac{\dot{R}_o}{R_o} \quad ,$$

and

$$q_o \equiv - \frac{\ddot{R}_o}{R_o H_o^2} \quad ,$$

it follows that

$$\rho_o = \frac{3H_o^2}{4\pi G} \; q_o \quad ,$$

and

$$\frac{Kc^2}{R_o^2 H_o^2} = (2q_o - 1) \quad .$$

The constants, $H_o$ and $q_o$, are customarily introduced because they are generally more susceptible to direct observation than are quantities such

as $R_o$ and $\rho_o$. Then, by defining the quantity, $R_m$, by

$$R_m \equiv \frac{8\pi G \rho_o R_o^3}{3c^2} \quad ,$$

the solutions to the Friedmann equation can be written down as follows. For K=0 or equivalently $q_o = \frac{1}{2}$,

$$R = (\frac{3}{2} c\sqrt{R_m})^{2/3} t^{2/3} \quad ,$$

$$= (\frac{3}{2} H_o)^{2/3} R_o t^{2/3} \quad ,$$

for K= +1 or equivalently $q_o > \frac{1}{2}$,

$$\sin^{-1}\left(\frac{R}{R_m}\right)^{\frac{1}{2}} - \left(\frac{R}{R_m}\right)^{\frac{1}{2}}\left(1 - \frac{R}{R_m}\right)^{\frac{1}{2}} = \frac{ct}{R_m} \quad ,$$

and for K= -1 which is equivalent to the case ($o < q_o < \frac{1}{2}$),

$$-\sinh^{-1}\left(\frac{R}{R_m}\right)^{\frac{1}{2}} + \left(\frac{R}{R_m}\right)^{\frac{1}{2}}\left(1 + \frac{R}{R_m}\right)^{\frac{1}{2}} = \frac{ct}{R_m} \quad .$$

In these models, the redshift, Z, of light from a distant source is given by

$$1+Z = \frac{R(t_o)}{R(t)} \equiv \frac{R_o}{R} \quad ,$$

where t and $t_o$ refer to "times" of emission and reception respectively.

For the Friedmann models Eqs. (II-1), (II-2), (II-3), and (II-4), can be written in terms of the comoving co-ordinates, $r_s$ and $r_m$, of the source and deflector respectively (co-ordinate system centered on observer) as

$$y = \frac{h_1}{R_d r_d} R_s r_s - \alpha_1 R_s r_{sd} \quad , \tag{II-5}$$

$$y = -\frac{h_2}{R_d r_d} R_s r_s + \alpha_2 R_s r_{sd} \quad , \tag{II-6}$$

and

$$\beta_{1,2} = \frac{h_{1,2}}{R_d r_d} \quad , \tag{II-7}$$

where "$r_{sd}$" is the function of $r_s$ and $r_d$ which when multiplied by $R_s$ gives the distance by apparent size from source to deflector.

Geometrical Relations in a Friedmann Model with $q_o=\frac{1}{2}$

The relations between R and r are simplest for a model with $q_o=\frac{1}{2}$, and for this reason, most of the calculations in later chapters will be done using this model. Therefore for convenience, the expressions for y and β will now be written down explicitly for this model. By making use of the relations,

$$r_{sd} = r_s - r_d \quad ,$$

and

$$R(r) = \frac{R_o^3 H_o^2}{4c^2} \left( \frac{2c}{R_o H_o} - r \right)^2 ,$$

y and β could be written in terms of either the "r's" or the "R's"; however, it is more convenient to write them in terms of the redshifts of the source, $Z_s$, and of the deflector, $Z_d$, since these are directly observable quantities. This can be done by substitution of the relations

$$r = \frac{2c}{R_o H_o} \left( \frac{\sqrt{1+Z} - 1}{\sqrt{1+Z}} \right) ,$$

and

$$R = \frac{R_o}{1+Z} ,$$

into Eqs. (II-5), (II-6), and (II-7). Doing so, we obtain

$$y = \pm h_{1,2} \frac{(1+Z_d)^{3/2} (\sqrt{1+Z_s} - 1)}{(1+Z_s)^{3/2} (\sqrt{1+Z_d} - 1)} \mp \frac{2c(\sqrt{1+Z_s} - \sqrt{1+Z_d})}{H_o (1+Z_s)^{3/2} \sqrt{1+Z_d}} \alpha_{1,2} . \qquad \text{(II-8)}$$

and

$$\beta_{1,2} = h_{1,2} \frac{H_o (1+Z_d)^{3/2}}{2c(\sqrt{1+Z_d} - 1)} , \qquad \text{(II-9)}$$

where the upper set of signs goes with the subscript 1, and the lower with the subscript 2. Substitution of Eqs. (II-9) into (II-8) allows

y to be expressed in terms of $\beta$ as

$$y = \pm \frac{2c\beta_{1,2}(\sqrt{1+Z_s} - 1)}{H_o(1+Z_s)^{3/2}} \mp \frac{(\sqrt{1+Z_s} - \sqrt{1+Z_d})\alpha_{1,2}}{(1+Z_s)^{3/2}\sqrt{1+Z_d}} \quad .$$

These relations will later be used to estimate the angular separation of double images (when they occur). Before this can be done however, the bending angles for a given type of deflecting mass must be calculated. This task is to be pursued in the following chapters.

## CHAPTER III

## A CYLINDRICALLY SYMMETRIC MODEL FOR THE DEFLECTING MASS

### Schmidt's Model of the Galaxy

The model to be used for the deflecting mass is a simplified version of one devised by Schmidt[18,19] to represent our galaxy. Schmidt's model consists of a central point mass of approximately $0.07 \times 10^{11}$ solar masses located at the center of an oblate spheriod (obtained by rotating an ellipse of eccentricity, e, about its minor axis). This oblate spheriod is differentiated into two concentric regions. The first region, extending along the major axis from zero to ten Kpc, contains approximately $0.82 \times 10^{11}$ solar masses (excluding the point mass), and the second, extending from ten Kpc to infinity, contains approximately $0.93 \times 10^{11}$ solar masses. The amount of mass beyond fifty Kpc is for most purposes a negligible fraction of the total. Each of these two regions is characterized by a mass density function which is cylindrically symmetrical about the rotational axis of the oblate spheriod; i.e., the model is composed of an infinite number of ellipsoidal shells and the mass density is constant over each ellipsoidal shell. Let $\omega$ be the co-ordinate function in the direction of the major axis and z the co-ordinate function in the direction of the rotational axis (see Fig. 3). The equation of an ellipsoidal shell of semi-major axis, a, and eccentricity, e, is

$$\frac{\omega^2}{a^2} + \frac{z^2}{a^2(1-e^2)} = 1 \quad .$$

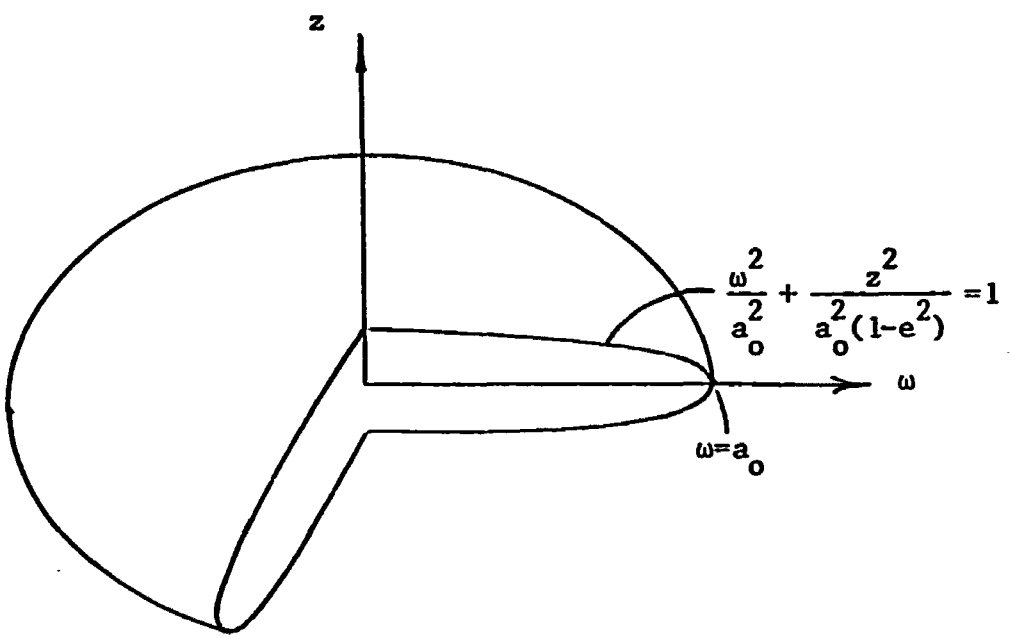


Figure 3. Oblate Spheriod.

If this shell lies within the first region (o<a<10Kpc), the mass density of this shell is taken as

$$\rho = 3.930 \times 10^9 \frac{1}{a} - 0.02489 \times 10^9 a \quad ,$$

and if the shell lies within the second region (a>10Kpc), the mass density is taken to be

$$\rho = 14.492\times10^{11}\,\frac{1}{a^4}\ ,$$

where "a" has units of Kpc and "ρ" has units of solar masses per cubic Kpc. The mass of an ellipsoidal shell of thickness, da, is given by

$$dM = 4\pi\sqrt{1-e^2}\ a^2\rho(a)da\ ,$$

and the mass interior to this shell (excluding the point mass) is

$$M(a) = 4\pi\sqrt{1-e^2}\ \int_0^a \rho(a)a^2da\ .$$

Thus, the mass interior to a shell located in the first region (zero to ten Kpc) is

$$M(a<10) = 4\pi\sqrt{1-e^2}\ (1.965a^2-0.0062225a^4)\times10^9 + 0.07\times10^{11}\ ,$$

and for one located in the second region

$$M(a>10) = 4\pi\sqrt{1-e^2}\ (2.79195 - \frac{14.492}{a})\times10^{11} + 0.07\times10^{11}\ ,$$

where "a" is in Kpc and "M" is in solar masses. According to Schmidt, the axial ratio, $\sqrt{1-e^2}$, for our galaxy is approximately 1/20. This model fits the experimental data for our galaxy quite well giving a total mass of approximately $1.8\times10^{11}$ solar masses. The ellipsoidal shell containing

our sun has semi-major axis of 10 Kpc, a mass density of approximately $0.145 \times 10^9$ solar masses per cubic Kpc, and approximately $0.91 \times 10^{11}$ solar masses interior to this shell.

Deflector Model to be Used in the Calculations

In order to facilitate calculations, the model to be used for representing deflecting masses (galaxies) is a good deal simpler than Schmidt's. Essentially what will be done is represent the deflectors by Schmidt's first region, zero to ten Kpc. The central point mass is discarded and the mass density function of an ellipsoidal shell of semi-major axis, a, in this region is simplified to

$$\rho(a) = 3.930 \times 10^9 \frac{1}{a} \quad .$$

The expression for the mass interior to this shell then becomes

$$M(a) = 4\pi\sqrt{1-e^2}\,(1.965 \times 10^9)a^2 \quad .$$

The model to be used will have a semi-major axis of ten Kpc, and a total mass of $1.23 \times 10^{11}$ solar masses. Schmidt's mass density and the one used here are plotted as a function of radius in Fig. 4.

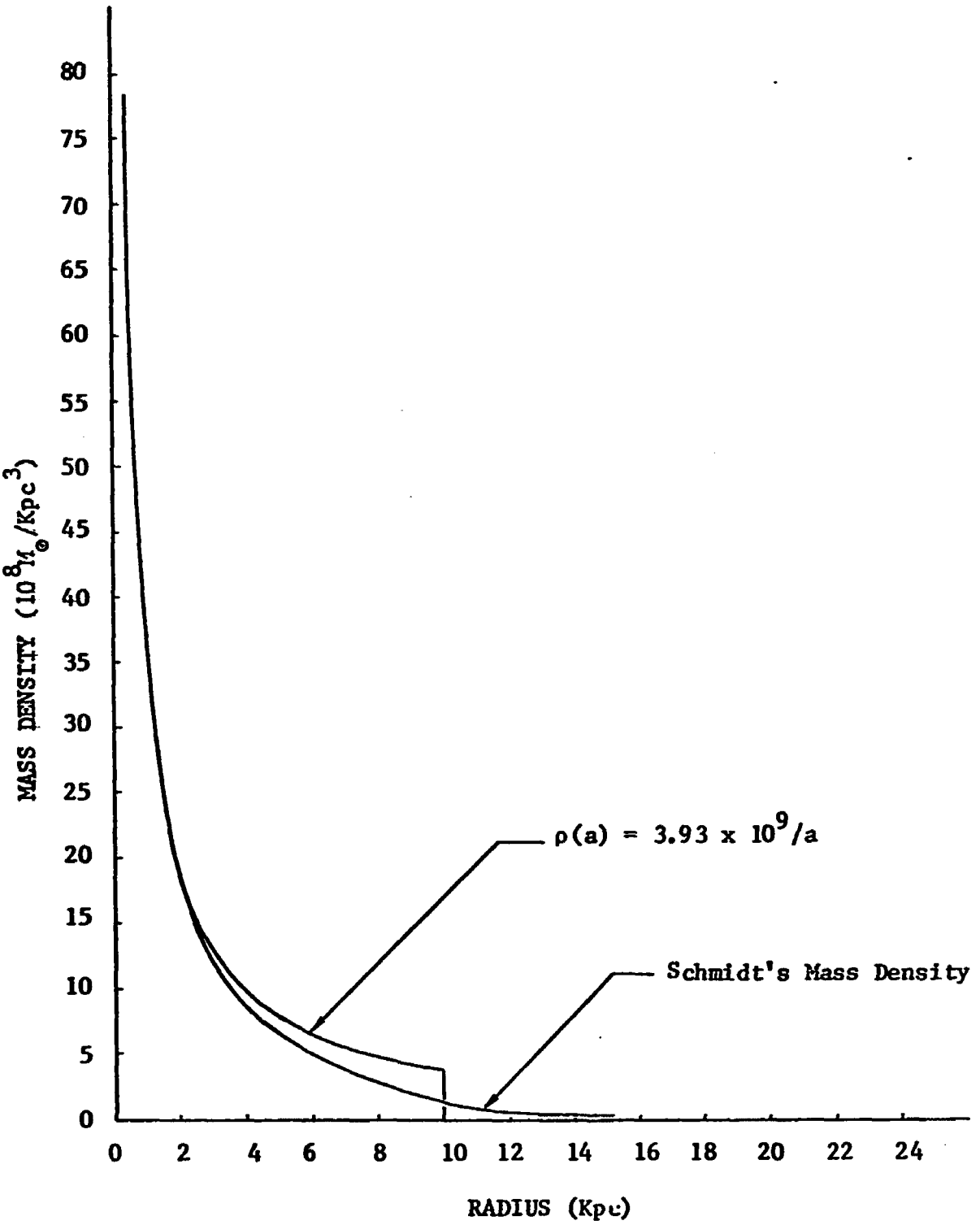


Figure 4. ρ vs. a.

## CHAPTER IV

## ASSUMPTIONS USED TO DERIVE THE LIGHT BENDING FORMULAE

In 1915 Einstein[20] demonstrated that light passing near a single spherically symmetric mass, m, at a minimum distance, h, should be deflected thru a total angle, $\alpha$, given by

$$\alpha = \frac{4GM}{c^2 h} \quad .$$

This relatively simple expression allows a straight forward analysis of the gravitational lens phenomena to be carried through in the case of spherical deflectors; however, it is the purpose here to examine the case of non-spherical deflectors. The major obstacle in this case will be to find the appropriate light bending formula for deflectors possessing cylindrical rather than spherical symmetry. The ideal method for finding such a formulae is to assign a stress-energy - momentum tensor, $T_{ab}$, to represent the deflectors, substitute into the Einstein field equations,

$$R_{ab} - \tfrac{1}{2} g_{ab} R = - \frac{8\pi G}{c^4} T_{ab} \quad ,$$

solve the field equations for the metrical components, $g_{ab}$, substitute the metrical components into the geodesic equations,

$$\frac{d^2x^a}{d\lambda^2} + \left\{ \begin{matrix} a \\ bc \end{matrix} \right\} \frac{dx^b}{d\lambda} \frac{dx^c}{d\lambda} = 0 \ ,$$

and solve these equations for the null geodesics. This procedure turns out to be a bit sticky; however, so an alternate method is sought.

The Linearized Theory of General Relativity

Since the general theory of relativity is not a linear theory, the superposition of solutions to obtain a solution is not a strictly valid procedure; however, in the limit of weak fields and for velocities much smaller than that of light, physical phenomena can be adequately described by the linear Newtonian gravitational theory. The class of problems described by a linear theory can be further extended (beyond that covered by the Newtonian theory) by linearizing the Einstein Field equations. In particular, this procedure allows a description of the behaviour of photons in a weak gravitational field, as opposed to the Newtonian gravitational theory which excludes photon behaviour. Since the theory is linear, an expression for the deflection of light by a non-spherical object can be obtained by integrating the results for a point mass. This will be the course of action followed in this paper.

A detailed description of the linearized theory is given in many text books*, thus only a brief review will be given here. Assume that in a weak gravitational field, the metrical components, $g_{ab}$, can be written as those of flat Minkowski space, $\eta_{ab}$, plus a small pertubation, $h_{ab}$; i.e., as

---

*See Bergmann [21].

$$g_{ab} = \eta_{ab} + h_{ab} \quad ,$$

where*

$$\eta_{ab} = \begin{pmatrix} -1 & 0 & 0 & 0 \\ 0 & 1 & 0 & 0 \\ 0 & 0 & 1 & 0 \\ 0 & 0 & 0 & 1 \end{pmatrix} \quad .$$

Substituting the above in the field equations and neglecting second order terms in h, gives

$$\tfrac{1}{2}\left[h_{,ab} + \eta^{cd}\,(h_{ab,cd} - h_{ac,bd} - h_{bc,ad})\right.$$

$$\left. - \eta_{ab}\eta^{cd}\,(h_{cd} - \eta^{ef}\,h_{ce,df})\right] = \frac{-8\pi G}{c^4}\,T_{ab} \quad .$$

By choosing appropriate co-ordinate systems, and by assuming that the dominant part of $T_{ab}$ is due to the mass density of the source, the linearized field equations can be further simplified to

$$\tfrac{1}{2}\nabla^2\gamma_{oo} = \frac{-8\pi G}{c^2}\,\rho \quad ,$$

---

*Latin indices run 0,1,2,3 and Greek indices run 1,2,3.

where "$\gamma$" is related to "h" by

$$\gamma_{ab} = h_{ab} - \tfrac{1}{2}\eta_{ab} h \quad ,$$

and

$$h_{ab} = \gamma_{ab} - \tfrac{1}{2}\eta_{ab}\gamma \quad .$$

Then requiring the linearized theory to be compatible with the Newtonian theory when the latter is applicable, implies that the field equations must reduce to

$$\nabla^2\phi = 4\pi G\rho \quad ,$$

where "$\phi$" is the Newtonian potential. In order that this be so, it is necessary that

$$\gamma_{oo} = -\frac{4\phi}{c^2} \quad .$$

The "$h_{ab}$" must then be related to the Newtonian potential, $\phi$, by

$$h_{oo} = -\frac{2\phi}{c^2} \quad , \tag{IV-1}$$

and

$$h_{\alpha\beta} = -\frac{2\phi}{c^2}\delta_{\alpha\beta} \quad . \tag{IV-2}$$

By substituting the linearized "$g_{ab}$" into the geodesic equations, we obtain the "linearized geodesic equations",

$$\frac{dv^a}{d\lambda} + \frac{\eta^{ac}}{2}\left[2h_{bc,d} - h_{bd,c}\right] u^b u^d = 0 \quad ,$$

where $u^a$ is the tangent vector to the photon's path in Minkowski space, and $u^a+v^a$ is the tangent vector to the photon's path in the weak gravitational field. Identifying the "$h_{ab}$" with the Newtonian potential, $\phi$, as in Eqs. (IV-1) and (IV-2) implies that

$$\frac{dv^a}{d\lambda} - \frac{\eta^{ac}}{c^2}\left[2\delta_{bc}\phi_{,d} - \delta_{bd}\phi_{,c}\right] u^b u^d = 0 \quad . \qquad \text{(IV-3)}$$

For photons, $\eta^{ab}u_b u_a=0$ and $\frac{d(ct)}{d\lambda} = 1$. Therefore, Eq. (IV-3) above can be written as

$$\frac{1}{c^2}\frac{dv^a}{dt} = \frac{1}{c^2}\,\eta^{ac}\left[2\delta_{bc}\phi_{,d} - \delta_{bd}\phi_{,c}\right] u^b u^d = 0 \quad .$$

For photons, $\delta_{bd}u^b u^d=2$, and the spatial part of the linearized geodesic equations is expressable as

$$\frac{dv^\alpha}{dt} = 2u^\alpha\phi_{,\beta}u^\beta - 2\phi,^\alpha \quad .$$

This equation can be interpreted as saying that the photon suffers no acceleration in the direction of its motion, but feels one perpendicular to its motion given by

$$a_\perp{}^\alpha = -\,2\phi,^\alpha \quad .$$

The total angle, $\alpha$, thru which light is bent as it passes near a point mass is given approximately by

$$\alpha = v_{\perp}/c \ ,$$

where $v_{\perp}$ can be obtained by integration of $a_{\perp}$. This implies that the bending angle is given by

$$\alpha_{\beta} = -\frac{2}{c} \int_{-\infty}^{\infty} \phi_{,\beta}\, dt \ .$$

From this expression it follows that light passing a distance, h, from a point mass, m, will be bent thru a total angle, $\alpha$, given by

$$\alpha = \frac{4GM}{c^2 h} \ .$$

From this result it should then be possible to find the bending angle for an extended body by superposition provided the linear theory is applicable; i.e., provided the gravitational field associated with such a body is weak.

## Criteria for a Weak Field

A certain amount of ambiquity is inherent in determining whether a field is weak or not. For a situation described by the Schwarzschild line element,

$$ds_s^2 = -c^2 dt^2 \left(1 - \frac{2GM}{c^2 r}\right) + \frac{r^2 dr}{1 - \frac{2GM}{c^2 r}} + r^2 \sin^2\theta d\phi^2 + r^2 d\theta^2 \ ,$$

the field is said to be weak if the quantity, $\frac{2GM}{c^2r}$, is small compared to one, since the line element approaches that of Minkowski space as this quantity goes to zero. For example, the field of the sun is generally considered to be weak, since for it

$$\frac{2GM_s}{c^2R_s} \simeq 2\times10^{-6} ,$$

where $M_s$ and $R_s$ are the mass and radius respectively of the sun. Assume that the same type of criteria is valid for determining the weakness of fields due to non-spherical masses; i.e., if a characteristic mass divided by a characteristic length of the system (where mass and length are expressed in the same units) is small compared to one, the field due to such an object will be assumed to be weak. The bodies considered here will be galaxies similar to our own; thus, the characteristic mass will be $\simeq 1.8\times10^{11}$ solar masses and the characteristic length will be either 10 Kpc or 0.5 Kpc. For 10 Kpc,

$$\frac{2GM}{c^2r} \simeq 1.4\times10^{-6} ,$$

and for 0.5 Kpc

$$\frac{2GM}{c^2r} \simeq 3.4\times10^{-4} ,$$

-in either case, a small number compared to one. The implication is that the gravitational field associated with a galaxy such as our own is weak and thus the linearized Einstein theory is applicable, which in turn

means that the light bending around such an object can be found by superimposing the bending due to each little piece of the body.

# CHAPTER V

## THE LIGHT BENDING FORMULAE FOR A RING

Proceeding under the assumptions discussed in the preceeding chapter, the deflection suffered by a light ray passing near a ring of mass, M(a)da, and radius, a, can be calculated by superposition of the bending angles due to each piece of the ring. Begin by choosing a rectangular co-ordinate system ($\tilde{x},\tilde{y},z$) such that "z" is along the axis of cylindrical symmetry, and the $\tilde{y}$-z plane is parallel to the light ray of interest (see Fig. 5). The following quantities are necessary for the calculation:

$\vec{r}$ ≡ vector from center of ring to an arbitrary point on the ring,

$\vec{R}$ ≡ vector orthogonal to the light ray, and extending from it to the center of the ring,

$\vec{\xi}$ ≡ vector orthogonal to the light ray, and extending from it to the tip of $\vec{r}$,

$\hat{i}$ ≡ unit vector in $\tilde{x}$-direction,

$\hat{j}$ ≡ unit vector in the $\tilde{y}$-direction,

$\hat{k}$ ≡ unit vector in the z-direction,

$\gamma$ ≡ angle between the z-direction and the light ray,

$\hat{e}$ ≡ unit vector pointing along light ray,

$= \sin\gamma\hat{j} - \cos\gamma\hat{k}$,

$\hat{p}$ ≡ unit vector orthogonal to $\hat{i}$ and $\hat{e}$,

$= \cos\gamma\hat{j} + \sin\gamma\hat{k}$,

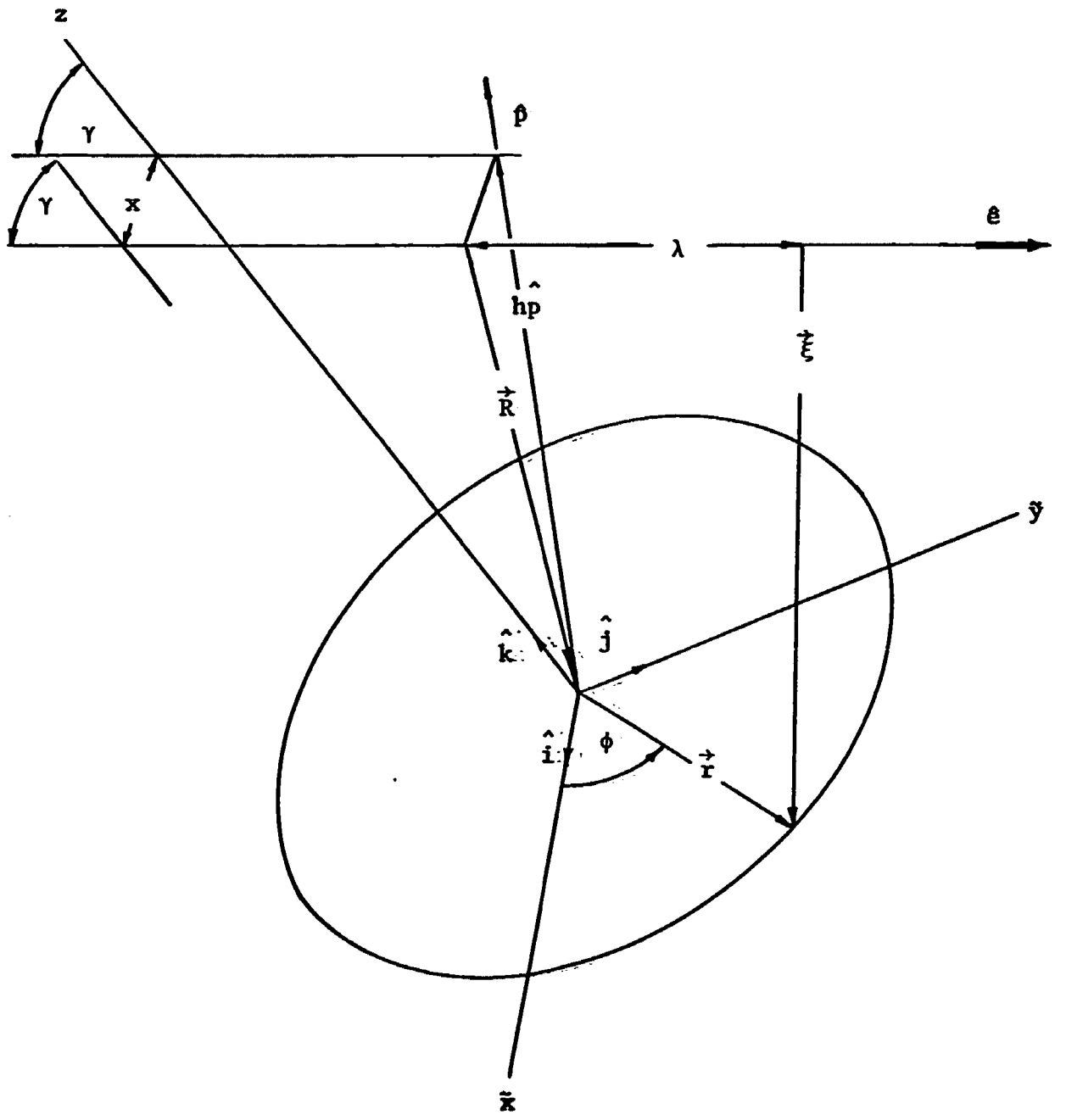


Figure 5. Light passing near a ring of radius, a, and mass M(a)da.

$\lambda \equiv \hat{e} \cdot \vec{r}$,

$x \equiv$ distance from $\tilde{y}$-z plane to light ray,

$h \equiv$ projection of $\vec{R}$ onto $\hat{y}$-z plane,

$\phi \equiv$ angle between $\vec{r}$ and x-axis.

From these definitions it follows that

$$\vec{\xi} \cdot \hat{e} = 0 \quad .$$

By consulting Fig. 5, it is obvious that

$$h\hat{P} + x\hat{i} + \lambda\hat{e} + \vec{\xi} - \vec{r} = 0 \quad ,$$

which implies that $\vec{\xi}$ can be written as

$$\vec{\xi} = \vec{r} - h\hat{P} - x\hat{i} - \lambda\hat{e} \quad .$$

From the definition of $\vec{r}$ we can write

$$\vec{r} = a\cos\phi\hat{i} + a\sin\phi\hat{j} \quad .$$

Substitution then allows $\vec{\xi}$ to be written as

$$\vec{\xi} = (a\cos\phi - x)\hat{i} + (a\sin\phi\cos\gamma - h)\hat{p} + (a\sin\phi\sin\gamma - \lambda)\hat{e} \quad ,$$

which reduces to

$$\vec{\xi} = (a\cos\phi - x)\hat{i} + (a\sin\phi\cos\gamma - h)\hat{p} \quad ,$$

since $\vec{\xi} \cdot e = 0$. The total angle, $\alpha_r$, thru which light passing near the ring will be bent is given approximately by

$$\vec{\alpha}_r = \frac{4GM(a)\,da}{2\pi c^2 a}\int_{\phi=0}^{\phi=2\pi} \frac{\vec{\xi}}{\vec{\xi}\cdot\vec{\xi}}\, d\phi \ , \qquad \text{(V-1)}$$

which following substitution for $\vec{\xi}$ becomes

$$\vec{\alpha}_r = \frac{4GM(a)\,da}{2\pi c^2}\int_0^{2\pi} \frac{(a\cos\phi - x)\hat{i} + (a\sin\phi\cos\gamma - h)\hat{p}}{x^2+h^2+a^2-2a(x\cos\phi+h\sin\phi\cos\gamma)-a^2\sin^2\phi\sin^2\gamma}\, d\phi \ . \qquad \text{(V-2)}$$

The integration for the general case as given by Eq. (V-2) appears rather difficult; therefore, two special cases will be considered.* First, if the light ray is contained in the y-z plane (x=0), Eq. (V-2) simplifies to

$$\vec{\alpha}_r(x=0) = \frac{4GM(a)\,da}{2\pi c^2}\int_0^{2\pi} \frac{(a\cos\gamma\sin\phi - h)}{(h-a\cos\gamma\sin\phi)^2+a^2\cos^2\phi}\, d\phi \ \ \hat{p} \ ,$$

and, the integration can now be done by the method of residues. Doing so gives

$$\vec{\alpha}_r(x=0) = \begin{cases} \dfrac{4GM(a)\,da}{c^2 a}\ \dfrac{1}{\sqrt{(h/a)^2+\sin^2\gamma}}\ (-\hat{p}) & \text{if } h/a > \cos\gamma, \text{ i.e. if light passes outside ring,} \\ 0 & \text{if } h/a < \cos\gamma, \text{ i.e. if light passes inside ring.} \end{cases} \qquad \text{(V-3)}$$

The second special case to be considered is the situation for which h=0 and x≠0; i.e., the case for which light intersects a radial line of

---

*The integration for the general case, Eq. (V-2), has recently been accomplished.

the ring orthogonally. In this case the general formula for the light bending simplifies to

$$\vec{\alpha}_r(h=0) = \frac{4GM(a)da}{2\pi c^2} \int_0^{2\pi} \frac{(a\cos\phi - x)}{x^2+a^2-2a(x\cos\phi)-a^2\sin^2\phi\sin^2\gamma}\, d\phi\, \hat{i} \quad ,$$

and as before the integration can be accomplished by the method of residues. The resulting expression for $\vec{\alpha}_r(h=0)$ is

$$\vec{\alpha}_r(h=0) = \begin{cases} \dfrac{4GM(a)da}{c^2 a} \dfrac{1}{\sqrt{(x/a)^2-\sin^2\gamma}}(-\hat{i}) & \text{if } x>a, \text{ i.e., if light passes outside the ring,} \\ 0 & \text{if } x<a, \text{ i.e., if light passes inside the ring.} \end{cases} \qquad (V\text{-}4)$$

Derivatives of Bending Angles for a Ring

In a later chapter it will be necessary to calculate and evaluate at x=0 the derivatives with respect to "x" and "h" of certain quantities related to $\vec{\alpha}_r$. The labor involved in this calculation can be reduced by noting that

$$\left| \frac{\partial \vec{\alpha}_r}{\partial x}\bigg|_{x=0} \right| = \left| \frac{\partial \vec{\alpha}_r}{\partial h}\bigg|_{x=0} \right| .$$

The demonstration of the validity of this relation is to be now undertaken. Returning to Eq. (V-2), we find that

$$\frac{\partial \vec{\alpha}_r}{\partial x} = \frac{4GM(a)da}{2\pi c^2} \int_0^{2\pi} \frac{-1}{\{\ \}}\,\hat{i} + \frac{2a\cos\phi\{(a\cos\phi - x)\hat{i} + (a\sin\phi\cos\gamma - h)\hat{p}\}}{\{\ \}^2}\, d\phi \quad ,$$

and evaluation at x=0 leads to

$$\left.\frac{\partial\vec{\alpha}_r}{\partial x}\right|_{x=0} = \frac{4GM(a)da}{2\pi c^2}\int_0^{2\pi}\left(\frac{a^2\cos^2\phi-(h-a\cos\gamma\sin\phi)^2}{\{\quad\}^2}\,\hat{i}\right. \tag{V-5}$$

$$\left. + \frac{(2a^2\cos\gamma\sin\phi\cos\phi-2ah\cos\phi)}{\{\quad\}^2}\,\hat{p}\right)d\phi \quad ,$$

where

$$\{\quad\} \equiv (h-a\sin\phi\cos\gamma)^2+a^2\cos^2\phi \quad .$$

Differentiating with respect to h, we find that

$$\frac{\partial\vec{\alpha}_r}{\partial h} = \frac{4GM(a)da}{2\pi c^2}\int_0^{2\pi}\frac{-1}{\{\quad\}}\,\hat{p} + \frac{(2h-2a\sin\phi\cos\gamma)\{(a\cos\phi-x)\hat{i}+(a\sin\phi\cos\gamma-h)\hat{p}\}}{\{\quad\}^2}\,d\phi \quad ,$$

with evaluation at x=0 leaving

$$\left.\frac{\partial\vec{\alpha}_r}{\partial h}\right|_{x=0} = \frac{4GM(a)da}{2\pi c^2}\int_0^{2\pi}\left(\frac{2a^2\cos\gamma\sin\phi\cos\phi-2ah\cos\phi}{\{\quad\}^2}\,\hat{i}\right. \tag{V-6}$$

$$\left. - \frac{a^2\cos^2\phi-(h-a\cos\gamma\sin\phi)^2}{\{\quad\}^2}\,\hat{p}\right)d\phi \quad .$$

By making the substitution, $\psi \equiv \phi + \frac{\pi}{2}$ , we find that

$$\sin\phi = -\cos\psi \quad ,$$

$$\cos\phi = \sin\psi \quad ,$$

$$\{\quad\} = (h+a\cos\gamma\cos\psi)^2 + a^2\sin^2\psi \quad ,$$

and we note that $\{\quad\}$ is symmetric in $\psi$; i.e., $\{+\psi\} = \{-\psi\}$.

We also find that under these substitutions Eq. (V-5) becomes

$$\left.\frac{\partial\vec{\alpha}_r}{\partial x}\right|_{x=0} = \frac{4GM(a)\,da}{2\pi c^2}\int \frac{(a^2\sin^2\psi-(h+a\cos\gamma\cos\psi)^2}{\{\quad\}^2}\,\hat{i} + \frac{2a\sin\psi-2a\cos^2\gamma\sin\psi\cos\psi}{\{\quad\}^2}\,\hat{p}\;d\psi\;,$$

and Eq. (V-6) becomes

$$\left.\frac{\partial\vec{\alpha}_r}{\partial h}\right|_{x=0} = \frac{4GM(a)\,da}{2\pi c^2}\int \frac{2a\sin\psi-2a^2\cos^2\gamma\sin\psi\cos\psi}{\{\quad\}^2}\,\hat{i} - \frac{a^2\sin^2\psi-(h+a\cos\gamma\cos\psi)^2}{\{\quad\}^2}\,\hat{p}\;d\psi\;.$$

We now observe that the $\hat{i}$ component of $\partial\vec{\alpha}_r/\partial x|_{x=0}$ and the $\hat{p}$ component of $\partial\vec{\alpha}_r/\partial h|_{x=0}$ are symmetric in $\psi$, and that the $\hat{p}$ component of $\partial\vec{\alpha}_r/\partial x|_{x=0}$ and the $\hat{i}$ component of $\partial\vec{\alpha}_r/\partial h|_{x=0}$ are anti-symmetric in $\psi$. Therefore, over an interval of $2\pi$ the anti-symmetric terms vanish in the integration leaving

$$\left.\frac{\partial\vec{\alpha}_r}{\partial x}\right|_{x=0} = \frac{4GM(a)\,da}{2\pi c^2}\int \frac{a^2\sin^2\psi-(h+a\cos\gamma\cos\psi)^2}{\{\quad\}^2}\,d\psi\;\;(\hat{i})\;,$$

and

$$\left.\frac{\partial\vec{\alpha}_r}{\partial h}\right|_{x=0} = \frac{4GM(a)\,da}{2\pi c^2}\int \frac{a^2\sin^2\psi-(h+a\cos\gamma\cos\psi)^2}{\{\quad\}^2}\,d\psi\;\;(-\hat{p})\;.$$

Therefore, as indicated, the relation between the derivatives is

$$\left|\partial\vec{\alpha}_r/\partial x|_{x=0}\right| = \left|\partial\vec{\alpha}_r/\partial h|_{x=0}\right|\;. \qquad \text{(V-7)}$$

# CHAPTER VI

## THE LIGHT BENDING FORMULAE FOR A FLAT CIRCULAR PLATE

Having found how a light ray is deflected when it passes near a ring, it is theoretically possible (assuming linearity) to find the deflection for light passing near an oblate spheriod by integration- provided that the appropriate mass density function is known. In practice however, this becomes an unwieldy task with no guarantee that the answers will have enough simplicity to make them surveyable. The fact that many galaxies, including our own, have an eccentricity very near one provides an alternative - that of representing the deflecting masses by flat plates rather than oblate spheriods. This alternative allows a measure of simplicity to be introduced without destroying the inherent cylindrical symmetry of the deflecting masses.

### Mass Density of the Plate Model

In order to find the various bending formulae for this flat plate model of a galaxy, it is necessary to construct a mass density function for the plates. Attention will now be directed toward this objective. First assume that the mass density function is cylindrically symmetric. Then assume that the most reasonable mass density for a plate can be obtained by projecting all the mass of the oblate spheriod model, discussed in Chapter II, onto a flat circular plate in the $\omega$-plane. For an oblate spheriod of eccentricity, e, semi-major axis,

$a_o$, and mass density $\rho(\omega,z)$, this procedure yields the following expression for the surface mass density, $\sigma(\omega)$, of a flat plate:

$$\sigma(\omega) = \int_{z=-\sqrt{(a_o^2-\omega^2)\ (1-e^2)}}^{z=+\sqrt{(a_o^2-\omega^2)\ (1-e^2)}} \frac{2\pi\omega\rho(\omega,z)\,d\omega\,dz}{2\pi\omega\,d\omega} \quad .$$

Using

$$\rho(\omega,Z) = \frac{A\sqrt{1-e^2}}{\sqrt{\omega^2(1-e^2)+z^2}} \quad ,$$

where "A" is some constant (for example $3.93\times10^9$), the expression for $\sigma(\omega)$ becomes

$$\sigma(\omega) = 2A\sqrt{1-e^2}\ \ln\frac{a_o+\sqrt{a_o^2-\omega^2}}{\omega} \quad .$$

If the above mass density is valid for the entire oblate spheriod, then the total mass of the oblate spheriod, and thus the total mass of the flat plate, is related to A, e, and $a_o$ by

$$M(a_o) = 2\pi a_o^2 A\sqrt{1-e^2} \quad .$$

Thus, the surface mass density function can also be written as

$$\sigma(\omega) = \frac{M(a_o)}{\pi a_o^2}\ \ln\frac{a_o+\sqrt{a_o^2-\omega^2}}{\omega} \quad . \qquad \text{(VI-1)}$$

## Light Passing Through the Rotational Axis of the Plate

### The Bending Angle for Light Passing Outside the Plate

Using Eq. (VI-1) for the surface mass density, consider the case in which light passes thru the rotational axis of the plate, makes an angle, $\gamma$, with the rotational axis, and passes outside the plate (see Fig. 6). Using the previous result for a ring, the expression for the deflection suffered by light in this case is

$$\vec{\alpha}_{p.o.}(x=0) = \frac{8\pi G}{c^2 \sin\gamma} \int \frac{\sigma(a)\,a\,da}{\sqrt{\left(\frac{h}{\sin\gamma}\right)^2 + a^2}} \,(-\hat{p}) \quad .$$

Substitution of the mass density prescribed by Eq. (VI-1) then gives

$$\vec{\alpha}_{p.o.}(x=0) = \frac{8GM(a_o)}{c^2 a_o^2 \sin\gamma} \int_{a=0}^{a=a_o} \frac{a \ln \frac{a_o+\sqrt{a_o^2-a^2}}{a}}{\sqrt{\left(\frac{h}{\sin\gamma}\right)^2 + a^2}}\, da\,(-\hat{p}) \quad ,$$

and performing the integration leaves

$$\vec{\alpha}_{p.o.}(x=0) = -\frac{8GM(a_o)}{c^2 a_o \sin\gamma} \left\{ \sin^{-1}\left[\frac{a_o \sin\gamma}{\sqrt{h^2+a_o^2\sin^2\gamma}}\right] - \frac{h}{2a_o\sin\gamma} \ln\left[1+\left(\frac{a_o\sin\gamma}{h}\right)^2\right]\right\}\hat{p},$$

where $M(a_o)$ is equal to the mass contained within radius, $a_o$.

The two special cases for which $\gamma=0$ and $\gamma=\pi/2$ are of some interest, and will now be examined. For $\gamma=\pi/2$, $\sqrt{1-e^2} = 0.05$, and $h = a_o\sqrt{1-e^2}$ (i.e., for light grazing the plate), $\vec{\alpha}_{p.o.}$ reduces to

$$\vec{\alpha}_{p.o.}(x=0,\gamma=\pi/2) \simeq (2.85)\,\frac{4GM(a_o)}{c^2 a_o}\,(-\hat{p}) \quad ,$$

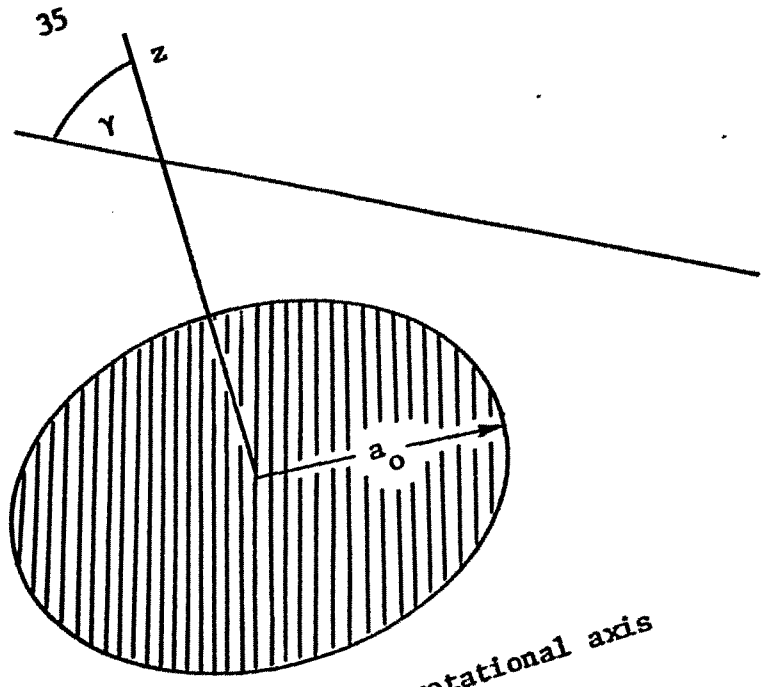


Light passing through the rotational axis and outside the flat plate.




Light passing through the rotational axis and through the flat plate.

Figure 6.

and this is approximately 2.9 times as large as the deflection suffered by light grazing a sphere of mass, $M(a_o)$, and radius, $a_o$. For $\gamma=0$ $\sqrt{1-e^2} = 0.05$, and $h=a_o$ (i.e., for light grazing the plate), we find that

$$\vec{\alpha}_{p.o.}(x=0,\gamma=0) = \frac{4GM(a_o)}{c^2 a_o} (-\hat{p}) \quad ,$$

and this is identical to the result obtained for light grazing a sphere of mass, $M(a_o)$, and radius, $a_o$.

## Derivatives of the Bending Angle for Light Passing Outside the Plate

The quantities, $\partial\vec{\alpha}/\partial x|_{x=0}$ and $\partial\vec{\alpha}/\partial h|_{x=0}$, will be required in Chapter VII. For this reason they will be evaluated here. By direct differentiation, we find that

$$\frac{\partial\vec{\alpha}_{p.o.}}{\partial h}\bigg|_{x=0} = \frac{4GM}{c^2 a_o^2 \sin^2\gamma} \ln\left[1 + \left(\frac{a_o \sin\gamma}{h}\right)^2\right] \hat{p} \quad ,$$

and using the results of Chapter V Eq. (V-7), we further deduce that

$$\frac{\partial\vec{\alpha}_{p.o.}}{\partial x}\bigg|_{x=0} = \frac{4GM}{c^2 a_o^2 \sin^2\gamma} \ln\left[1 + \left(\frac{a_o \sin\gamma}{h}\right)^2\right] (-\hat{i}) \quad .$$

## The Bending Angle for Light Passing Through the Plate

It is well known that galaxies exhibit some degree of transparency; it is therefore desirable to assume transparency for the flat plate model used here to represent a galaxy, and calculate the bending formulae for light passing through the plate. From the bending

formulae for a ring, no deflection results if the light passes inside the ring; thus, for light passing thru a transparent plate, only the mass inside the circle of radius, $a_m$, (where "$a_m$" is the distance from the center of the plate to the point of intersection of light and plate) contributes to the bending (shaded portion in Fig. 6). Assume that the impact parameter, h, is related to "$a_m$" by

$$a_m = \frac{h}{\sqrt{\cos^2\gamma + (1-e^2)\sin^2\gamma}} ,$$

and that the mass density of the plate for $a < a_m$ is given by

$$\sigma(a) = \frac{M(a_o)}{\pi a_o^2} \ln \frac{a_m + \sqrt{a_m^2 - a^2}}{a} .$$

These assumptions are tantamount to the assumption that only the mass within the oblate spheriod of eccentricity, e, and semi-major axis, $a_m$, contributes to the bending of the light (shaded portion in Fig. 7). That this is probably not strictly valid can be seen by examining the case for which $\gamma=0$ (see Fig. 7) - the assumption in this case being that only the shaded portion of the oblate spheriod contributes to the bending when in fact all the mass within the cylinder of radius, $a_m$, contributes. For the situation just described, the expression for the light deflection is

$$\vec{\alpha}_{p.i.}(x=0) = \frac{8GM(a_o)}{c^2 a_o^2 \sin\gamma} \int_{a=0}^{a=a_m} \frac{a \ln \frac{a_m + \sqrt{a_m^2 - a^2}}{a}}{\sqrt{\left(\frac{h}{\sin\gamma}\right)^2 + a^2}} \, da(-\hat{p}) ,$$

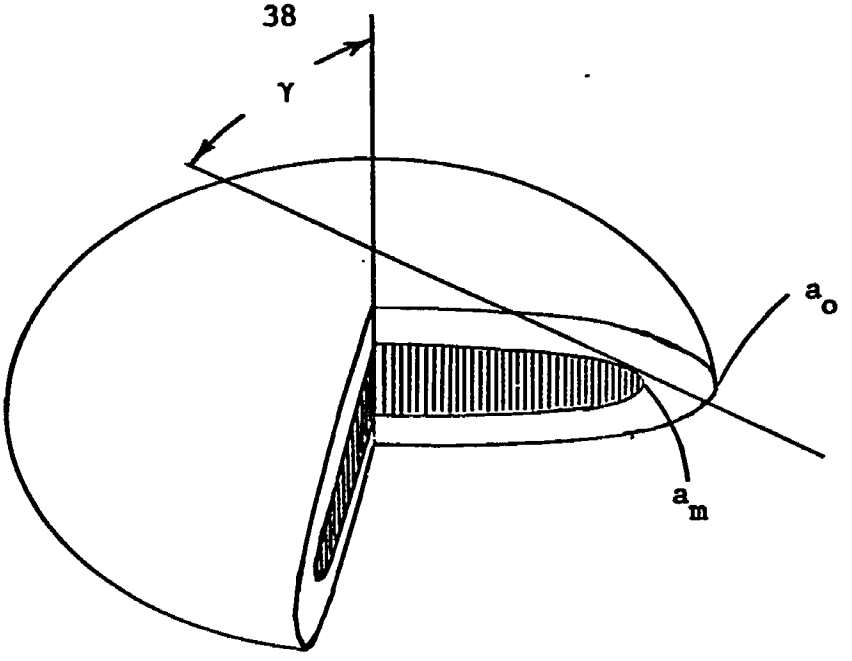


Light passing through an oblate spheriod at angle, $\gamma$.

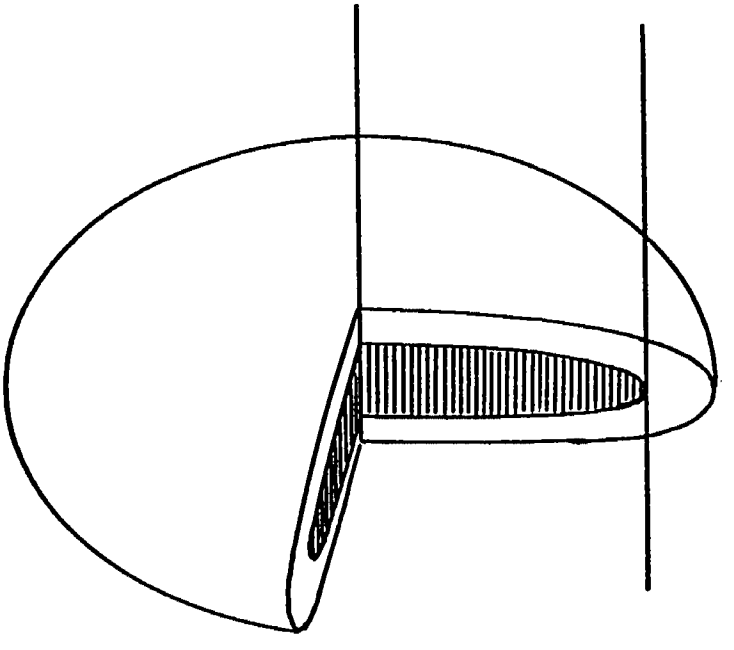

Light passing through an oblate spheriod for the case, $\gamma = 0$.

Figure 7.

which integrates to

$$\vec{\alpha}_{p.i.}(x=0) = -\frac{8GM(a_o)}{c^2 a_o^2}\left[\frac{a_m}{\sin\gamma}\sin^{-1}\left[\frac{a_m\sin\gamma}{\sqrt{h^2+a_m^2\sin^2\gamma}}\right]\right.$$

$$\left. -\frac{h}{2a_m\sin\gamma}\ln\left[1+\left(\frac{a_o\sin\gamma}{h}\right)^2\right]\right]\hat{p} \quad . \qquad \text{(VI-2)}$$

## Derivatives of the Bending Angle for Light Passing Through the Plate

The expression for $\partial\vec{\alpha}/\partial h|_{x=0}$ can be evaluated by differentiating Eq. (VI-2) directly - doing so gives

$$\frac{\partial\vec{\alpha}_{p.i.}}{\partial h}\bigg|_{x=0} = \frac{8GM(a_o)}{c^2 a_o^2\sin^2\gamma}\left\{\frac{a_m\sin\gamma}{h}\sin^{-1}\left[\frac{a_m\sin\gamma}{\sqrt{h^2+a_m^2\sin^2\gamma}}\right]\right. \qquad \text{(VI-3)}$$

$$\left. -\frac{1}{2}\ln\left[1+\left(\frac{a_m\sin\gamma}{h}\right)^2\right]\right\}(-\hat{p}) \quad .$$

However, the expression for $\partial\vec{\alpha}/\partial x|_{x=0}$ must be evaluated indirectly. This is carried out in the appendix, where it is found that

$$\frac{\partial\vec{\alpha}_{p.i.}}{\partial x}\bigg|_{x=0} = \frac{4GM(a_o)}{c^2 a_o^2\sin^2\gamma}\ln\left[1+\left(\frac{a_m\sin\gamma}{h}\right)^2\right](-\hat{i}) \quad . \qquad \text{(VI-4)}$$

## Light Meeting a Radial Line of the Plate Orthogonally

Having obtained the light bending formulae for light passing thru the rotational axis of the plate, the case where light intersects a radial line of the plate orthogonally ($h=0$, $x\neq 0$) is to now be considered

(see Fig. 8). From the results obtained for a ring Eq. (V-4), the light deflection in this case is given by

$$\vec{\alpha}_p(h=0) = \frac{8\pi G}{c^2} \int \frac{\sigma(a)\,a\,da}{\sin\gamma\sqrt{\left(\frac{x}{\sin\gamma}\right)^2 - a^2}} \quad (-\hat{i}) \quad . \qquad \text{(VI-5)}$$

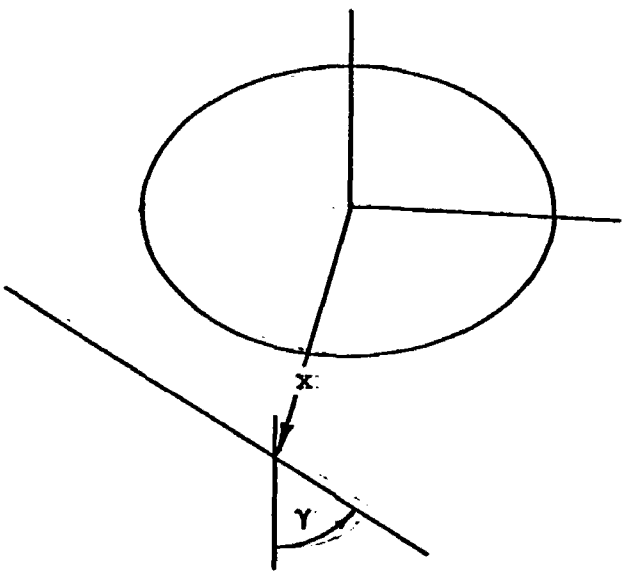


Figure 8. Light meeting a radial line of the plate orthogonally.

The Bending Angle for Light Passing Outside the Plate

If the light passes outside the plate, substitution of the mass density specified by Eq. (VI-1) into (VI-5) gives

$$\vec{\alpha}_{p.o.}(h=0) = \frac{8GM(a_o)}{c^2 a_o^2 \sin\gamma} \int_{a=0}^{a=a_o} \frac{a \ln \frac{a_o + \sqrt{a_o^2 - a^2}}{a}}{\sqrt{\left(\frac{x}{\sin\gamma}\right)^2 - a^2}}\, da \quad ,$$

and integration then yields

$$\vec{\alpha}_{p.o.}(h=0) = -\frac{4GM(a_o)}{c^2 a_o}\frac{x}{a_o}\frac{1}{\sin^2\gamma}\left\{\left(1-\frac{a_o}{x}\sin\gamma\right)\ln\left[1-\frac{a_o}{x}\sin\gamma\right] + \left(1+\frac{a_o}{x}\sin\gamma\right)\ln\left[1+\frac{a_o}{x}\sin\gamma\right]\right\}\hat{i} \quad .$$

The Bending Angle for Light Passing Through the Plate

For light passing inside the plate, the same assumption is made as in the case for which $x=0$ and $h\neq 0$ - namely that for light passing thru the plate at a distance, x, from the center, only the mass contained within an oblate spheriod of eccentricity, e, and semi-major axis, x, contributes to the light bending. Under this assumption the mass density can be written as

$$\sigma(a) = \frac{M(a_o)}{\pi a_o^2}\ln\frac{x+\sqrt{x^2-a^2}}{a} \quad .$$

Substitution into Eq. (VI-5) then gives

$$\vec{\alpha}_{p.i.}(h=0) = \frac{8GM(a_o)}{c^2 a_o^2 \sin\gamma}\int_{a=0}^{a=x}\frac{a\ln\frac{x+\sqrt{x^2-a^2}}{a}}{\sqrt{\frac{x}{\sin\gamma}^2-a^2}}\,da \quad ,$$

and performing the integration then yields

$$\vec{\alpha}_{p.i.}(h=0) = -\frac{4GM(a_o)}{c^2 a_o^2}\frac{x}{\sin^2\gamma}\left[(1-\sin\gamma)\ln(1-\sin\gamma)+(1+\sin\gamma)\ln(1+\sin\gamma)\right]\hat{i} \quad .$$

Two special cases of interest are $\gamma=\pi/2$ and $\gamma=0$. For $\gamma=\pi/2$ and light grazing the edge of the plate,

$$\vec{\alpha}_p(h=0) \simeq (1.38)\,\frac{4GM(a_o)}{c^2 a_o}\,(-\hat{i}) \quad ,$$

and for $\gamma=0$

$$\vec{\alpha}_p(h=0) = \frac{4GM(a_o)}{c^2 a_o}\,(-\hat{i}) \quad .$$

## CHAPTER VII

## THE BRIGHTENING OF IMAGES DUE TO FLAT PLATE DEFLECTORS

As mentioned in Chapter I, the Luminosity or "brightness" of a source may be enhanced by the presence of a mass between source and observer as compared to the case where no such mass is present. Define the ratio of the luminosity observed with the deflector mass present to the luminosity with the deflector absent as the amplification factor, "I". The amplification factor is calculated by comparing the cross-sectional areas, at the observer, of infintesimal bundles of light rays which subtend identical solid angles at the source in the two cases to be considered (see Fig. 9). The universe is to be represented by homogeneous Friedmann dust models in the case where no deflectors are present, and by inhomogeneous Friedmann models in the case where deflectors are present - the inhomogeneities being deflectors. In general, the observed luminosity, $\ell$, is given by the expression

$$\ell = \frac{L}{4\pi} \frac{\delta_s}{\delta A} \frac{1}{(1+Z_s)^2} ,$$

where

$L \equiv$ absolute luminosity of the source,

$A \equiv$ cross-sectional area of infintesimal bundle of light rays at the observer,

$Z_s \equiv$ redshift of the source with respect to the observer,

and

$\delta\Omega_s \equiv$ solid angle subtended at source by $\delta A$.

Thus, according to the definition, the amplification factor will be given by

$$I = \frac{\left[\dfrac{L\ \delta\Omega_{sd}}{4\pi\ \delta A_{od}\ (1+Z_s)^2}\right]}{\left[\dfrac{L}{4\pi\ R_s^2 r_s^2\ (1+Z_s)^2}\right]} ,$$

$$= \frac{\delta\Omega_{sd}}{\delta A_{od}}\ R_s^2 r_s^2 ,$$

where the subscript, d, refers to the inhomogeneous Friedmann model.

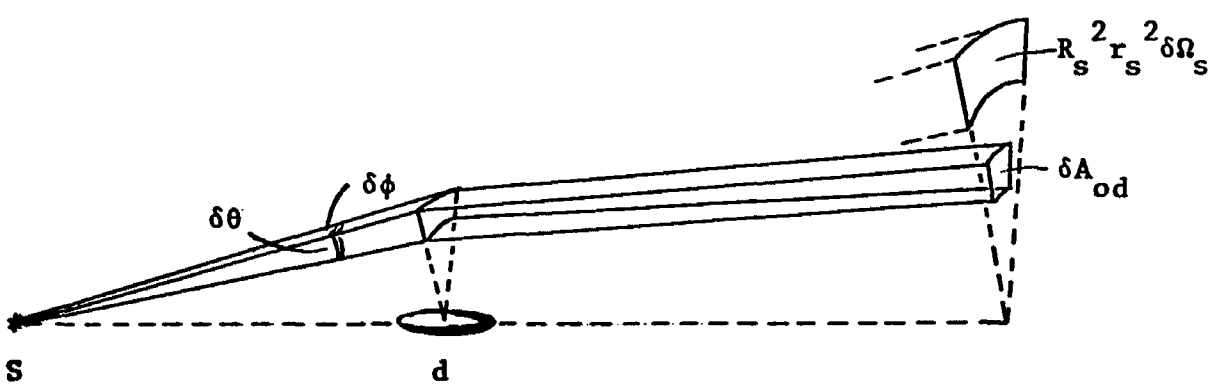


Figure 9. Bundle of light rays passing near a deflector.

## Amplification Factor for Imaging Rays Passing Through the Rotational Axis

Consider the case for which the infintesimal bundle of light rays connecting source with observer passes thru the rotational axis of the deflector (see Fig. 10). The amplification factor is given by

$$I = \frac{R_s^2 r_s^2}{\frac{\delta A_{od}}{\delta \Omega_{sd}}} ,$$

or upon substitution of $\delta\Omega_s = \delta\theta\delta\phi$ by

$$I = \frac{R_s^2 r_s^2}{\left(\frac{\delta Y}{\delta\theta}\right)\left(\frac{\delta X}{\delta\phi}\right)} .$$

The problem, then, is to calculate $\delta Y/\delta\theta$ and $\delta X/\delta\phi$. From Fig. 10, it is apparent that

$$Y = \theta R_s r_s - |\vec{\alpha}| R_s r_{sd} .$$

Differentiation then gives

$$\frac{\delta Y}{\delta\theta} = R_s r_s - R_s r_{sd} \frac{\partial|\vec{\alpha}|}{\delta\theta} ,$$

which can be rewritten as

$$\frac{\delta Y}{\delta\theta} = R_s r_s \left[1 - \frac{r_{sd}}{r_s} \frac{\partial|\vec{\alpha}|}{\partial h} \frac{dh}{d\theta}\right] .$$

Making use of the relation, $h = R_d r_d \theta$, leads to

$$\frac{\delta Y}{\delta\theta} = R_s r_s \left[1 - \frac{R_d r_d r_{sd}}{r_s} \frac{\partial|\vec{\alpha}|}{\partial h}\right] .$$

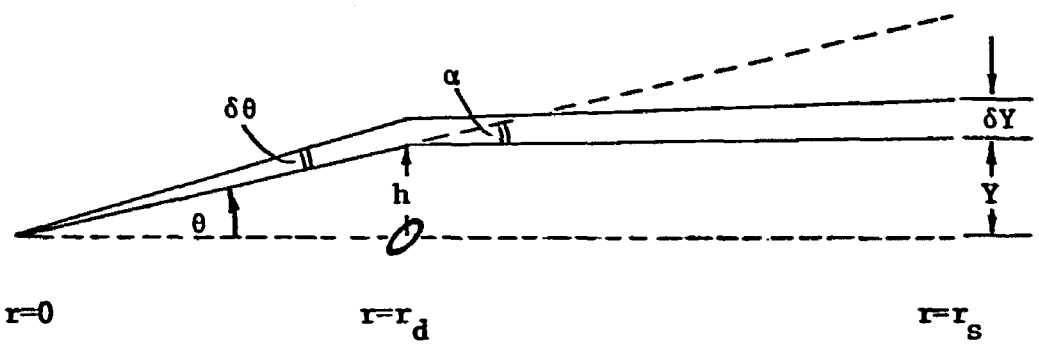


Side view.

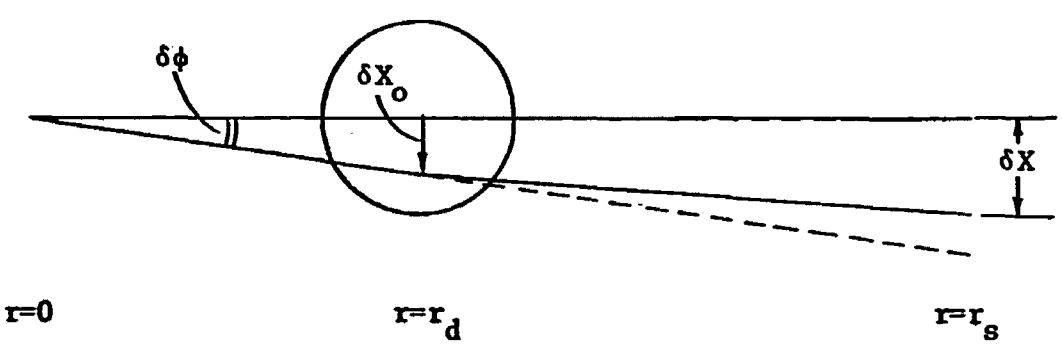


Top view.

Figure 10. Bundle of light rays passing through the rotational axis of a deflector.

Similarly in the orthogonal direction

$$\delta X = R_s r_s \, \delta\phi - \mu R_s r_{sd} \quad ,$$

where

$$\mu = \frac{\partial |\vec{\alpha}|}{\partial x} \, \delta X \quad ,$$

$$= \frac{\partial |\vec{\alpha}|}{\partial x} \, R_d r_d \delta\phi \quad .$$

Substitution and rearrangement then gives

$$\frac{\delta X}{\delta \phi} = R_s r_s \left[ 1 - \frac{R_d r_d r_{sd}}{r_s} \frac{\partial |\vec{\alpha}|}{\partial x} \right] \quad .$$

Then by substituting for $\delta Y/\delta\theta$ and $\delta X/\delta\phi$, the expression for the amplification factor can be written as

$$I = \left[ 1 - \frac{R_d r_d r_{sd}}{r_s} \frac{\partial |\vec{\alpha}|}{\partial h} \right]^{-1} \left[ 1 - \frac{R_d r_d r_{sd}}{r_s} \frac{\partial |\vec{\alpha}|}{\partial x} \right]^{-1} \quad .$$

Defining the quantity, F, by

$$F \equiv \frac{R_d r_d r_{sd}}{r_s} \quad ,$$

allows the expression for the amplification factor to be written more compactly as

$$I = \left[ 1 - F \frac{\partial |\vec{\alpha}|}{\partial h} \right]^{-1} \left[ 1 - F \frac{\partial |\vec{\alpha}|}{\partial x} \right]^{-1} \quad . \qquad \text{(VII-1)}$$

If desired, F, can be written in terms of the redshifts of the source, $Z_s$, and deflector, $Z_d$. For example, if $q_o = \frac{1}{2}$, we have

$$F = \frac{R_d r_d (r_s - r_d)}{r_s} \quad ,$$

which can be written in terms of redshifts as

$$F(Z) = \frac{2c}{H_o} \frac{\left(\sqrt{1+Z_s} - 1\right)\left(\sqrt{1+Z_s} - \sqrt{1+Z_d}\right)}{\left(1+Z_d\right)^{3/2}\left(\sqrt{1+Z_s} - 1\right)} \quad .$$

Amplification Factors in the Case of Plate Deflectors

The quantities, $\partial\vec{\alpha}/\partial h$, and $\partial\vec{\alpha}/\partial x$ were evaluated in the previous Chapter for light passing outside the deflector, and in the case of transparency, thru the deflector (note that $\partial|\vec{\alpha}|/\partial h = -|\partial\vec{\alpha}/\partial h|$ and that $\partial|\vec{\alpha}|/\partial x = |\partial\vec{\alpha}/\partial x|$ for both the inside and outside cases). By substituting the appropriate derivatives into Eq. (VII-1), the amplification factor for light passing outside the plate becomes

$$I_o = \left[ 1 - F^2 \left( \frac{4GM(a_o)}{c^2 a_o^2 \sin^2\gamma} \right)^2 \ln \left[ 1 + \frac{a_o^2 \sin^2\gamma}{h^2} \right]^2 \right]^{-1} \quad . \qquad \text{(VII-2)}$$

In a similar fashion, the amplification factor for light passing through the plate may be expressed as

$$I_i = \left\{ 1 + F \frac{8GM(a_o)}{c^2 a_o^2 \sin^2\gamma} \left[ \ln\left(\frac{\sqrt{q^2+1}}{q}\right) - \frac{1}{q}\sin^{-1}\left(\frac{1}{\sqrt{q^2+1}}\right)\right]\right\}^{-1} \qquad \text{(VII-3)}$$

$$\times \left\{ 1 - F \frac{8GM(a_o)}{c^2 a_o^2 \sin^2\gamma} \ln\left(\frac{\sqrt{q^2+1}}{q}\right) \right\}^{-1} ,$$

where

$$q = \frac{1}{\sin\gamma} \sqrt{\cos^2\gamma + (1-e^2)\sin^2\gamma} \quad .$$

Note that for light passing outside the plate, the amount of "brightening" depends upon the positions (redshifts) of source and deflector, and on the impact parameter, h. However, for light passing inside the plate and for this particular assumed mass density of the plate, the amount of "brightening" depends only upon the positions of source and deflector; i.e., for a given source and deflector, the amplification factor is independent of what point on the plate the light passes through.

## Imaging Rays Passing Through the Semi-Major Axis of the Deflector

The amplification factors for the case of imaging rays passing through a radial line of the deflector orthogonally could be found in a manner similar to that used above - all that is necessary is the derivatives of the appropriate bending angles. However, calculations have indicated that for the deflectors we are using here and for sources at redshifts

less than three, light rays touching opposite points of the deflector and passing through the semi-major axis of the deflector will not cross. Thus, although in the general case, it would be possible to see four images of the source (for suitable alignment of source, deflector, and observer), only two will be possible under the conditions considered here. Since we are principally interested in the observability of the double imaging phenomena, and since for our case rays passing through the semi-major axis of the deflector cannot contribute to this phenomena, the amplification factors for this case will not be explicitly written down here.

## CHAPTER VIII

## PROBABILITY OF SEEING DOUBLE IMAGES

In Chapters I and II, it was indicated that suitable positioning of deflector and source allows an observer to see two images of the source. Assuming for the moment that the observer has the ability to see and resolve both images, the following question may be put forth. For sources of a given morphology, and at a given distance (redshift) from the observer, what fraction may be expected to participate in the double imaging phenomena? It will be the purpose of this chapter to answer this question.

Construct a sphere, about the observer, such that all sources lying at redshift, $Z_s$, will lie on the sphere's surface, and assume that the sources are uniformly distributed over the surface. Then, for a given deflecting mass lying inside this sphere, there exists an area, $A_{overlap}$, on the sphere's surface such that if a source is located inside this area it will exhibit the double imaging phenomena (see Fig. 11). Thus, the fraction, P, of sources at redshift, $Z_s$, exhibiting double images should be given by the ratio of the total overlapped area (defined as the sum of all overlapped area) to the area of the sphere's surface, $A_F$; i.e.,

$$P \equiv \frac{1}{A_F} \Sigma A_{overlap} ,$$

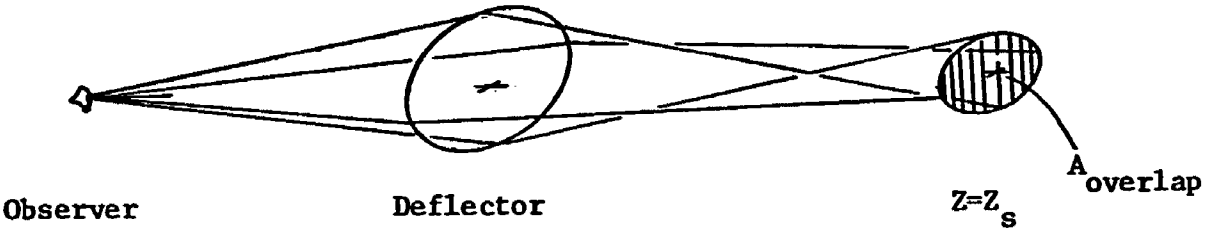


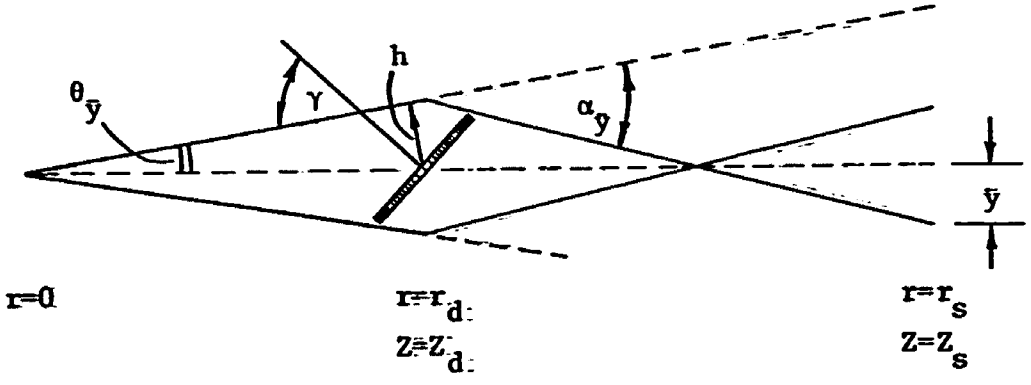


Side view

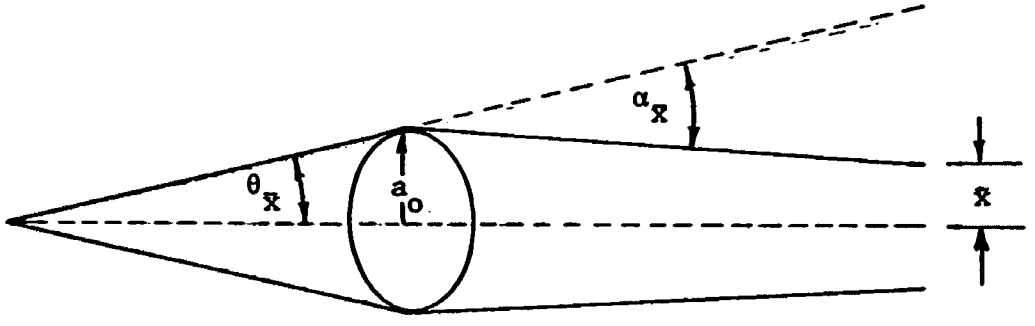


Top view

Figure 11. Overlapped area.

where "$\Sigma$" means sum over the deflectors contributing to overlap. By consulting Fig. 11, and assuming that the overlapped areas on the sphere are elliptically shaped, the expression for the overlapped area can be written as

$$(A_{overlap}) = \pi \bar{y} \bar{x} \quad .$$

The expression for P then becomes

$$P = \Sigma \frac{\pi \bar{y} \bar{x}}{4\pi R_s^2 r_s^2} \quad ,$$

where $\bar{y}$ is given by

$$\bar{y} = \theta_{\bar{y}} R_s r_s - \alpha_{\bar{y}} r_{sd} R_s \quad ,$$

and where

$$\theta_{\bar{y}} = \frac{h}{Rr} \quad .$$

The impact parameter, h, may be expressed as a function of "$\gamma$" and "e" as

$$h = a_o \sqrt{\cos^2\gamma + (1-e^2)\sin^2\gamma} \quad .$$

Substituting this into the expression for $\theta_{\bar{y}}$ then gives

$$\theta_{\bar{y}} = \frac{a_o \sqrt{\cos^2\gamma + (1-e^2)\sin^2\gamma}}{Rr} \quad .$$

The bending angle, $\alpha_{\bar{y}}$, above may be conveniently written as

$$\alpha_{\bar{y}} \equiv \alpha_E f_{\bar{y}}(\gamma) \quad ,$$

where

$$\alpha_E \equiv \frac{4GM(a_o)}{c^2 a_o} \quad ,$$

and

$$f_y(\gamma) \equiv \frac{2}{\sin\gamma}\left\{\sin^{-1}\left[\frac{a_m \sin\gamma}{\sqrt{h^2+a_m^2\sin^2\gamma}}\right] - \frac{h}{2a_m\sin\gamma}\ln\left[1+\left(\frac{a_o\sin\gamma}{h}\right)^2\right]\right\} .$$

Following a similar procedure allows "x" to be written as

$$\bar{x} = \theta_{\bar{x}} R_s r_s - \alpha_{\bar{x}} r_{sd} R_s \quad ,$$

where

$$\theta_{\bar{x}} = \frac{a_o}{Rr} \quad ,$$

$$\alpha_{\bar{x}} \equiv \alpha_E f_{\bar{x}}(\gamma) \quad ,$$

and

$$f_{\bar{x}}(\gamma) \equiv \frac{1}{\sin^2\gamma}\left[(1-\sin\gamma)\ln(1-\sin\gamma) + (1+\sin\gamma)\ln(1+\sin\gamma)\right] \quad .$$

The fraction of sources being seen as double can now be written as

$$P = \frac{1}{4}\Sigma\left[\theta_{\bar{y}} - \alpha_{\bar{y}}\frac{r_{sd}}{r_s}\right]\left[\theta_{\bar{x}} - \alpha_{\bar{x}}\frac{r_{sd}}{r_s}\right],$$

or by substituting for $\theta$ and $\alpha$ as

$$P = \frac{1}{4}\Sigma\left[\frac{a_o\sqrt{\cos^2\gamma+(1-e^2)\sin^2\gamma}}{Rr} - \alpha_E f_{\bar{y}}(\gamma)\frac{r_{sd}}{r_s}\right]\left[\frac{a_o}{Rr} - \alpha_E f_{\bar{x}}(\gamma)\frac{r_{sd}}{r_s}\right] .$$

The number of deflectors in a spherical shell of radius, r, and thickness, dr, is given by

$$N(r)dr = \frac{\rho_{comoving}}{\langle M\rangle}\frac{4\pi r^2}{\sqrt{1-Kr^2}}\,dr \quad , \qquad \text{(VIII-1)}$$

where $\rho_{comoving}$ is the co-moving mass density of deflectors (galaxies). Substituting $\rho_{od} = \rho_{comoving}/R_o^3$ into Eq. (VIII-1) gives

$$N(r)dr = \frac{\rho_{od} R_o^3}{<M>} \frac{4\pi r^2 dr}{\sqrt{1-Kr^2}} .$$

Then by using $\sin\gamma$ as the random distribution function for $\gamma$ and allowing the sums above to become integrals over variables which allow overlap, P can be written as

$$P = \frac{\rho_{od}}{\rho_{oF}} \pi \frac{\rho_{oF} R_o^3}{<M/a_o^2>} \int_{r=r_{min}(\gamma)}^{r=r_{max}(\gamma)} \int_{\gamma=\gamma_{min}}^{\gamma=\gamma_{max}} \left[ \frac{\sqrt{\cos^2\gamma+(1-e^2)\sin^2\gamma}}{Rr} - \frac{\alpha_E}{a_o} f_y(\gamma,e) \frac{r_{sd}}{r_s} \right]$$

$$\times \left[ \frac{1}{Rr} - \frac{\alpha_E}{a_o} f_x(\gamma) \frac{r_{sd}}{r_s} \right] \frac{r^2}{\sqrt{1-Kr^2}} \sin\gamma \, d\gamma \, dr .$$

Defining "B" and "$\eta$" by

$$B \equiv \frac{2c}{H_o} \frac{\alpha_E}{a_o} ,$$

and

$$\eta \equiv \frac{H_o}{c} \frac{Rrr_{sd}}{r_s} ,$$

"P" can be further rewritten as

$$P = \frac{\rho_{od}}{\rho_{oF}} \frac{6q_o}{B} \int_{r=r_{min}}^{r=r_{max}} \int_{\gamma=\gamma_{min}}^{\gamma=\gamma_{max}} \left[ \sin\gamma\sqrt{\cos^2\gamma+(1-e^2)\sin^2\gamma} - \frac{B}{2} f_y(\gamma,e)\, \eta\sin\gamma \right]$$

$$\times \left[ 1 - \frac{B}{2} f_x(\gamma)\eta \right] \frac{R_o^2}{R^2\sqrt{1-Kr^2}}\, d\gamma d\left( \frac{H_o R_o r}{c} \right) . \quad \text{(VIII-2)}$$

And, this is the sought after expression which gives the probability for double images. If desired, P can be expressed in terms of redshifts by utilizing the following relations:

$$\frac{R_o}{R} = 1+Z \ ,$$

$$rR_o = \frac{c}{H_o q_o^2 (1+Z)} \left[ q_o Z + (q_o-1) \left[ \sqrt{1+2q_o Z} - 1 \right] \right] ,$$

$$r_{sd} = \frac{c}{R_o H_o q_o^2 (1+Z_s)(1+Z_d)} \left[ \left[ q_o Z_s + (1-q_o) \right] \sqrt{1+2q_o Z_d} - \left[ q_o Z_d + (1-q_o) \right] \sqrt{1+2q_o Z_s} \right] ,$$

$$\sqrt{1-Kr^2} = \sqrt{1 - \frac{(2q_o-1) \left[ q_o Z_d + (q_o-1)(\sqrt{1+2q_o Z_d} - 1) \right]^2}{q_o^4 (1+Z_d)^2}}$$

and

$$d\left( \frac{H_o r R_o}{c} \right) = \frac{1}{q_o^2 (1+Z_d)^2 \sqrt{1+2q_o Z_d}} \left[ (2q_o-1)(\sqrt{1+2q_o Z_d} + (1-q_o)(q_o Z_d + 1 - q_o) \right] .$$

Approximate Expression for Fraction of Sources Seen as Double

Examination of Eq. (VIII-2), leaves little hope for analytic evaluation in the general case. However, for the special case of $q_o = \frac{1}{2}$, an approximate expression for "P" can be obtained by assuming $\gamma=\pi/2$, and $e = 1$. For this special case the expression for "P" simplifies to

$$P = \frac{\rho_{od}}{\rho_{oF}} \frac{\pi\rho_{oF}}{\langle M/a_o^2 \rangle} R_o^3 \int_{\gamma_{min}}^{\gamma=\pi/2} \int_{r_{min}}^{r_{max}} \left[ \frac{\cos\gamma}{Rr} - \frac{\alpha_E}{a_o} f_y(\pi/2,0) \frac{(r_s-r)}{r_s} \right]$$

$$\times \left[ \frac{1}{Rr} - \frac{\alpha_E}{a_o} f_x(\pi/2) \frac{(r_s-r)}{r_s} \right] r^2 \sin\gamma \, d\gamma \, dr \quad ,$$

where $\gamma_{min}$ is given by

$$\cos\gamma_{min} = \frac{\pi B H_o Rr(r_s-r)}{2cr_s} \quad .$$

Carrying out the $\gamma$ integration and writing in terms of redshifts gives

$$P = -\frac{\rho_{od}}{\rho_{oF}} 3B\pi^2 \int_{Z=0}^{Z=Z_s} \frac{(\sqrt{1+Z_s} - \sqrt{1+Z})^2}{(\sqrt{1+Z_s} - 1)^2 (1+Z)} \left[ 1 - Bf_x(\pi/2) \frac{(\sqrt{1+Z}-1)}{(1+Z)^{3/2}} \right]$$

$$\times \frac{(\sqrt{1+Z}-1)}{(1+Z)} d(\sqrt{1+Z}) \quad ,$$

and carrying out the "Z" integration then gives the following approximate expression for P:

$$P \simeq -\frac{\rho_{od}}{\rho_{oF}} \frac{\pi^2 B}{10} \frac{(\sqrt{1+Z_s}-1)^3}{(1+Z)^{3/2}} \left[1- \frac{f_{\bar{x}}(\pi/2)B(\sqrt{1+Z_s}-1)\left[(1+Z_s)+\frac{8}{5}\sqrt{1+Z_s}+1\right]}{3780(1+Z_s)^{3/2}}\right] , \quad \text{(VIII-3)}$$

where $f_{\bar{x}}(\pi/2) = 2 \ln 2$, and $B \simeq 1$ to 1.5. Assuming that $\rho_{od}/\rho_{oF}$ is unity, P as a function of the redshift of sources is plotted in Fig. 12. Adding the assumption that $\rho_{od}/\rho_{oF} \sim \frac{1}{4}$ (i.e., $\frac{1}{4}$ of the galaxies are of a type which contributes significantly to overlap), approximately 2% of the sources seen at $Z_s=2$ would be expected to be double in the case just considered. Numerical integration of the general expression Eq. (VIII-2), indicates that Eq. (VIII-3) overestimates the expected number of double images in a $q_o=\frac{1}{2}$ model by a factor of approximately two.

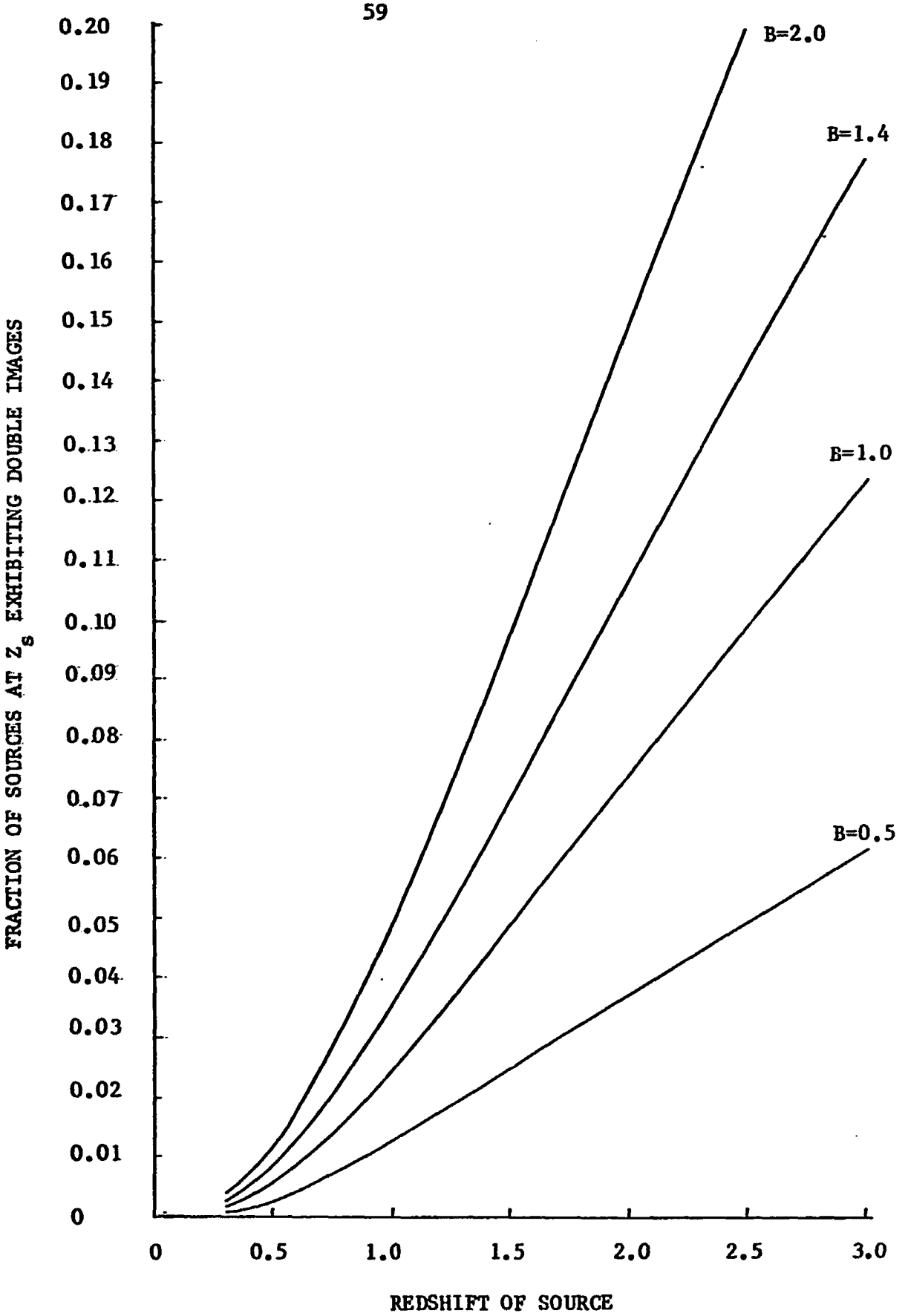


Figure 12. P vs. $Z_s$ using Eq. (VIII-3).

## CHAPTER IX

## NUMERICAL DATA

From the relations written down in the previous chapters, it should now be possible to make some specific statements concerning the observability of the double imaging phenomena.

Numerical integration of Eq. (VIII-2), allows the relation between fraction of sources observed as double and the redshifts of these sources to be displayed graphically as in Fig. 13, 14, 15. In these graphs it was assumed that all the mass of the universe is tied up in the deflectors used for the calculation. The values of P may be corrected by multiplying by the fraction, f, of mass in the universe contained in galaxies which are reasonably well represented by the deflectors used.

Figure 13 illustrates how the relation between P and $Z_s$ is affected by assuming various cosmological models. If $q_o = 0.005$ (as is the case if the mean mass-energy density in the universe is $2 \times 10^{-31}$ $gm/cm^3$), the probabilities of observation are rather remote. However, if $q_o \simeq 0.5$, as is indicated by some observed luminosity redshift relations, the probabilities of observation become significant; for example, taking $f = \frac{1}{2}$ and $B \simeq 1.4$ indicates that about 3% of the sources at $Z_s = 2$ could be expected to be seen as doubles.

Figure 14 illustrates the effect of varying B (essentially $M/a^2$) on the relation between P and $Z_s$. For large spiral galaxies similar to

our own, B is approximately 1 to 1.5. So, for $q_o = \frac{1}{2}$ and $f = \frac{1}{2}$, about 1.6 - 3.3% of the sources at $Z_s = 2$ could be expected to be seen as double.

Figure 15 illustrates to some extent how variations in the axial ratios of the deflectors may influence the probability of observation for a $q_o = 0.5$ model. Actually, in this calculation, the decrease in P with increasing axial ratios is probably too severe, since increasing axial ratios here merely increases the minimum distance between light and plate. Figure 15 indicates that doubling the axial ratio reduces the probability of observation by a factor of about two for source redshifts one to three.

In all cases for which reasonable values of B and $q_o$ were assumed, the probability of observing double images becomes significant only at cosmological distances; i.e., at redshifts greater than 0.5. For all practical purposes this restricts the sources that might exhibit the effects discussed to quasi-stellar objects since they are the only objects at cosmological distances whose intrinsic brightness is large enough to allow observation.

Two other questions which arise regarding observability are whether or not the brightness of the two images is sufficient to allow observation of both images; and if so, whether or not the angular separation of the two images is large enough to allow resolution of both images. The brightness of the images relative to the brightness that would be observed in a homogeneous Friedmann Universe can be calculated from the amplification factors derived in Chapter VII (Eqs. VII-II, VII-III). In all cases investigated, amplification factors were greater

than one; i.e., both images are brighter than the source would appear in a homogeneous Friedmann Universe. From the relations written down in Chapter II and the expressions for the bending angles derived in Chapter VI, it is possible to calculate the angular separation of the two images when the imaging rays pass through the rotational axis of the deflector. When the calculations are done in a $q_o = 0.5$ model, the angular separation of the two images ranges from 0.1 to approximately 2 seconds of arc. The limit on optical resolution is about one second, but if the sources happen to be radio emitters, the images could easily be resolved by long base line radio interferometry techniques[22]. Some selected results of numerical calculation giving amplification factors and angular separations of images for various positioning of observer, deflector and source are presented in Table 1.

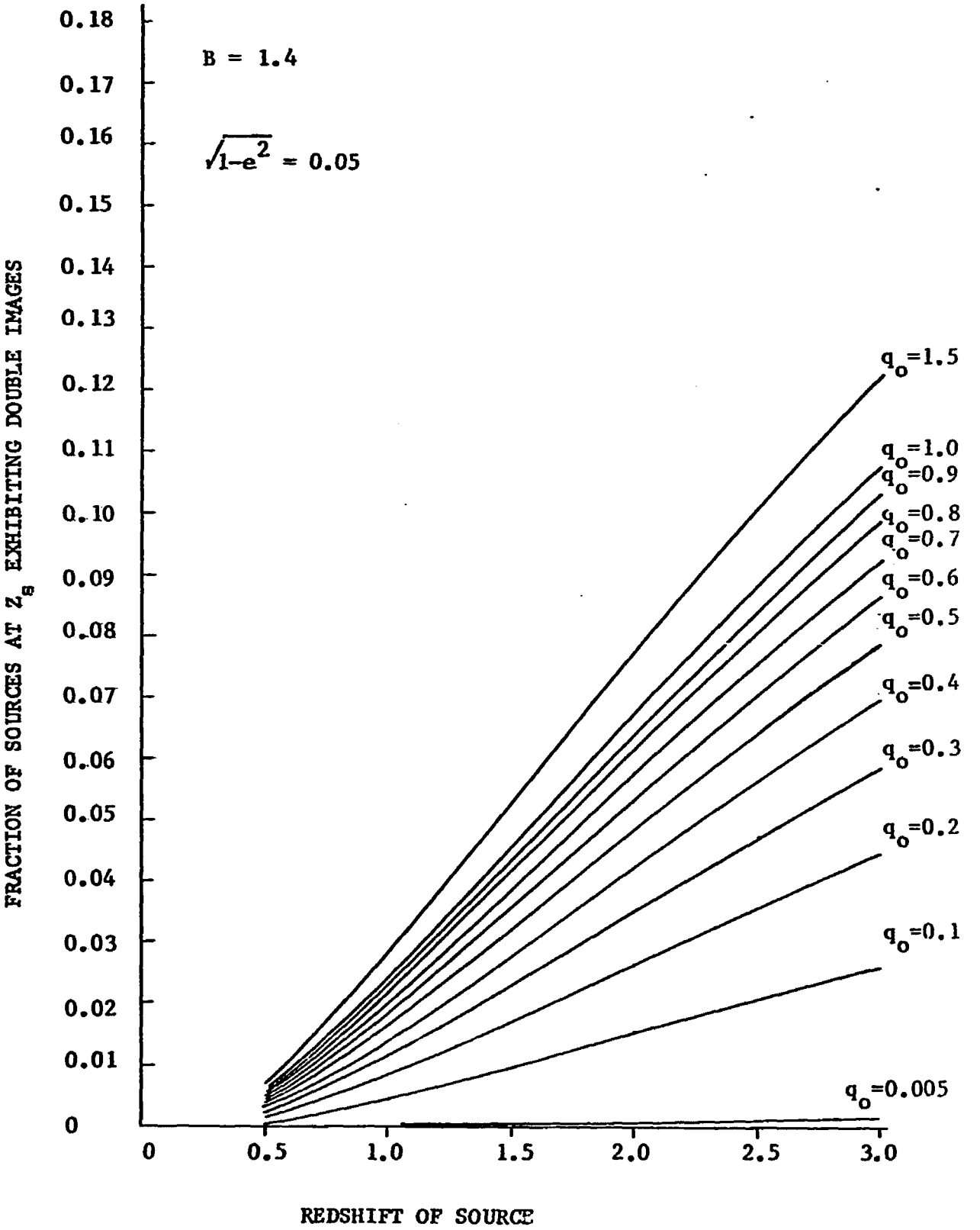


Figure 13. P vs. $Z_s$.

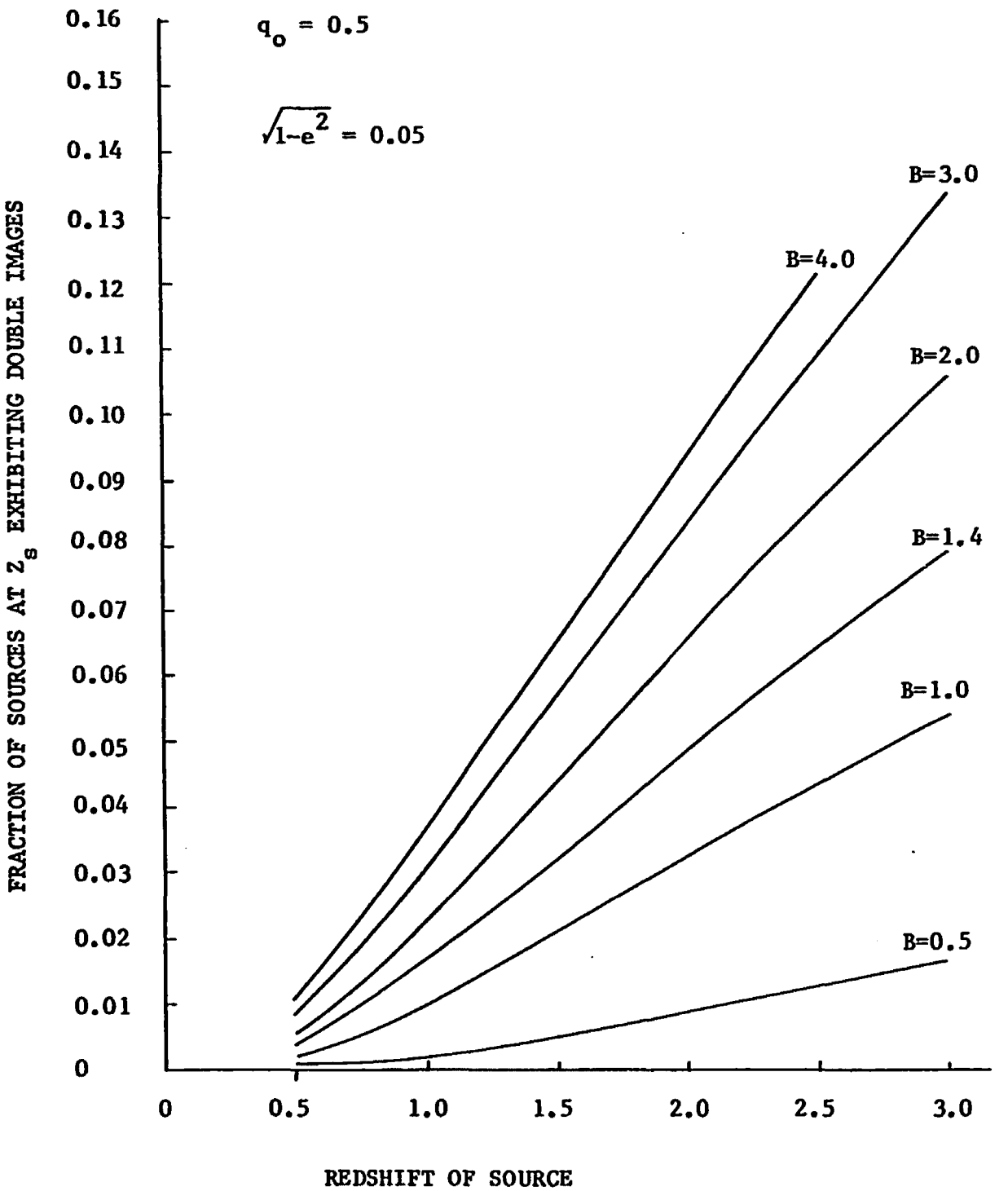


Figure 14. P vs. $Z_s$.

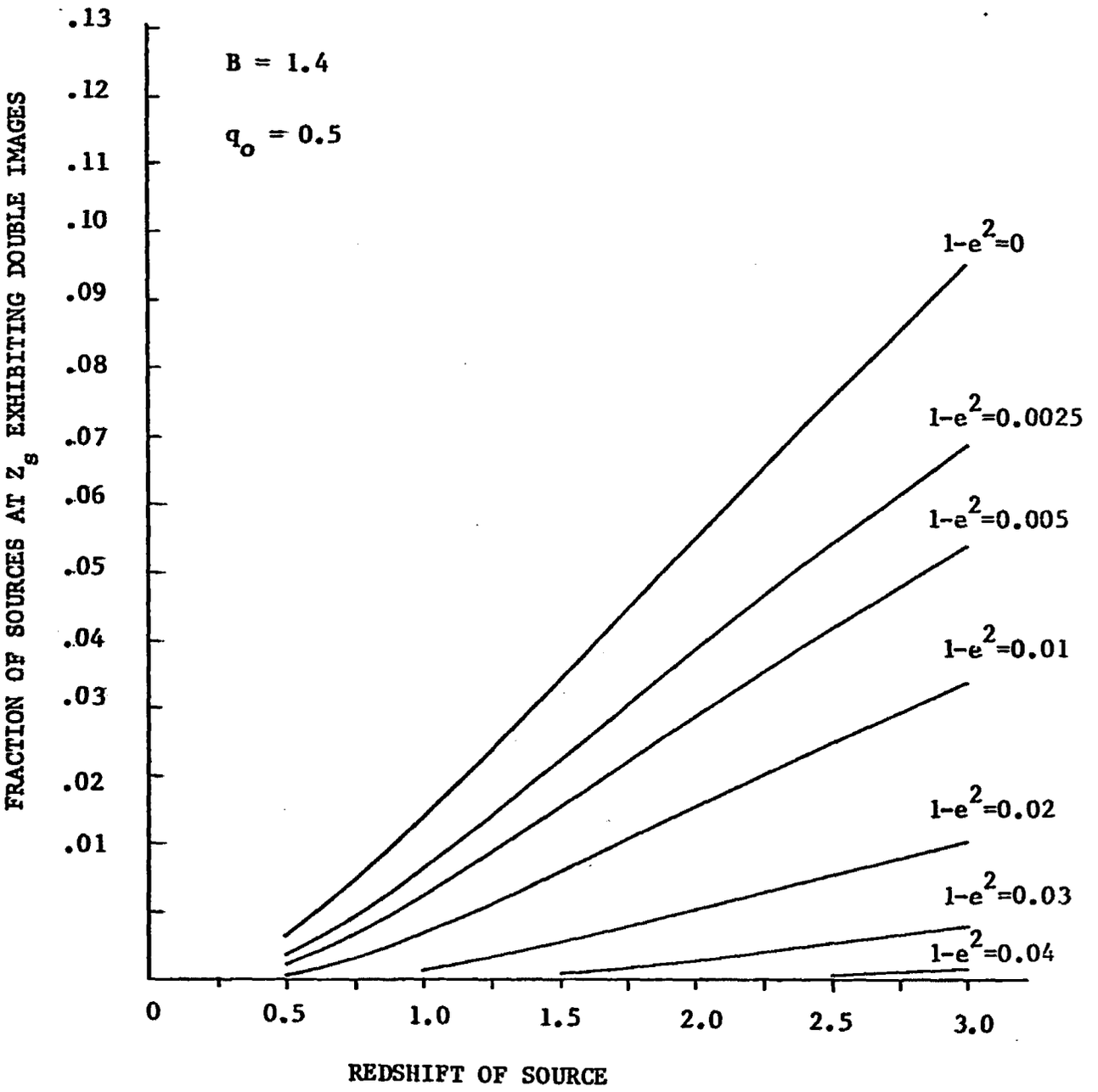


Figure 15. P vs. $Z_s$.

Table I. Amplification Factors and Angular Separations of Double Images in a Universe with $q_o=\frac{1}{2}$ Universe

| y(Kpc) | γ(Rad) | $h_1$(Kpc) | $\beta_1$(sec) | $I_1$ | $h_2$(Kpc) | $\beta_2$(sec) | $I_2$ |
|---|---|---|---|---|---|---|---|
| $Z_d$=0.1 and $Z_s$=0.5 | | | | | | | |
| 1.72 | 1.5707 | 1.59 | 1.29 | 1.03 | 0.60 | 0.49 | 1.07 |
| 0.66 | 1.5 | 1.28 | 1.04 | 1.04 | 0.90 | 0.73 | 1.05 |
| $Z_d$=0.1 and $Z_s$=1.0 | | | | | | | |
| 2.59 | 1.5707 | 1.83 | 1.49 | 1.03 | 0.60 | 0.49 | 1.10 |
| 1.28 | 1.5 | 1.51 | 1.23 | 1.04 | 0.90 | 0.73 | 1.07 |
| $Z_d$=0.1 and $Z_s$=1.5 | | | | | | | |
| 2.78 | 1.5707 | 1.91 | 1.55 | 1.03 | 0.60 | 0.49 | 1.10 |
| 1.46 | 1.5 | 1.59 | 1.29 | 1.04 | 0.90 | 0.73 | 1.08 |
| $Z_d$=0.1 and $Z_s$=2.0 | | | | | | | |
| 2.75 | 1.5707 | 1.95 | 1.59 | 1.04 | 0.60 | 0.49 | 1.11 |
| 1.48 | 1.5 | 1.63 | 1.33 | 1.04 | 0.90 | 0.73 | 1.08 |
| $Z_d$=0.1 and $Z_s$=2.5 | | | | | | | |
| 2.64 | 1.5707 | 1.97 | 1.60 | 1.04 | 0.60 | 0.49 | 1.11 |
| 1.44 | 1.5 | 1.65 | 1.34 | 1.04 | 0.90 | 0.73 | 1.08 |
| $Z_d$=0.1 and $Z_s$=3.0 | | | | | | | |
| 2.52 | 1.5707 | 1.99 | 1.62 | 1.04 | 0.60 | 0.49 | 1.11 |
| 1.39 | 1.5 | 1.67 | 1.36 | 1.04 | 0.90 | 0.73 | 1.08 |
| $Z_d$=0.5 and $Z_s$=1.0 | | | | | | | |
| 1.35 | 1.5707 | 2.40 | 0.67 | 1.06 | 0.60 | 0.17 | 1.25 |
| 0.88 | 1.5 | 2.07 | 0.58 | 1.07 | 0.90 | 0.25 | 1.17 |
| 0.12 | 1.45 | 1.56 | 0.44 | 1.10 | 1.40 | 0.39 | 1.11 |
| $Z_d$=0.5 and $Z_s$=1.5 | | | | | | | |
| 2.07 | 1.5707 | 3.24 | 0.91 | 1.07 | 0.60 | 0.17 | 1.55 |
| 1.55 | 1.50 | 2.88 | 0.81 | 1.08 | 0.90 | 0.25 | 1.36 |
| 0.73 | 1.45 | 2.34 | 0.66 | 1.11 | 1.40 | 0.39 | 1.22 |
| 0.11 | 1.40 | 1.94 | 0.55 | 1.15 | 1.80 | 0.51 | 1.16 |

Table I. (Cont'd.)

| y(Kpc) | γ(Rad) | $h_1$(Kpc) | $\beta_1$(sec) | $I_1$ | $h_2$(Kpc) | $\beta_2$(sec) | $I_2$ |
|---|---|---|---|---|---|---|---|
| $Z_d$=0.5 and $Z_s$=2.0 | | | | | | | |
| 2.32 | 1.5707 | 3.64 | 1.02 | 1.07 | 0.60 | 0.17 | 1.83 |
| 1.81 | 1.50 | 3.28 | 0.92 | 1.08 | 0.90 | 0.25 | 1.51 |
| 1.00 | 1.45 | 2.72 | 0.76 | 1.12 | 1.40 | 0.39 | 1.30 |
| 0.39 | 1.40 | 2.31 | 0.65 | 1.15 | 1.80 | 0.65 | 1.22 |
| $Z_d$=0.5 and $Z_s$=2.5 | | | | | | | |
| 2.40 | 1.5707 | 3.89 | 1.09 | 1.07 | 0.60 | 0.17 | 2.08 |
| 1.90 | 1.50 | 3.52 | 0.99 | 1.09 | 0.90 | 0.25 | 1.63 |
| 1.12 | 1.45 | 2.95 | 0.83 | 1.12 | 1.40 | 0.39 | 1.35 |
| 0.53 | 1.40 | 2.53 | 0.71 | 1.16 | 1.80 | 0.51 | 1.26 |
| $Z_d$=0.5 and $Z_s$=3.0 | | | | | | | |
| 2.38 | 1.5707 | 4.06 | 1.14 | 1.07 | 0.60 | 0.17 | 2.31 |
| 1.91 | 1.50 | 3.68 | 1.03 | 1.09 | 0.90 | 0.25 | 1.72 |
| 1.16 | 1.45 | 3.10 | 0.87 | 1.12 | 1.40 | 0.39 | 1.40 |
| 0.60 | 1.40 | 2.60 | 0.75 | 1.16 | 1.80 | 0.51 | 1.29 |
| $Z_d$=1.0 and $Z_s$=1.5 | | | | | | | |
| 0.53 | 1.5707 | 1.48 | 0.35 | 1.05 | 0.60 | 0.14 | 1.13 |
| 0.16 | 1.50 | 1.18 | 0.28 | 1.07 | 0.90 | 0.21 | 1.09 |
| $Z_d$=1.0 and $Z_s$=2.0 | | | | | | | |
| 1.06 | 1.5707 | 2.36 | 0.56 | 1.07 | 0.60 | 0.14 | 1.34 |
| 0.68 | 1.50 | 2.03 | 0.48 | 1.09 | 0.90 | 0.21 | 1.23 |
| 7.2 | 1.45 | 1.52 | 0.36 | 1.13 | 1.40 | 0.33 | 1.15 |
| $Z_d$=1.0 and $Z_s$=2.5 | | | | | | | |
| 1.32 | 1.5707 | 2.87 | 0.67 | 1.08 | 0.60 | 0.14 | 1.59 |
| 0.95 | 1.50 | 2.53 | 0.59 | 1.10 | 0.90 | 0.21 | 1.38 |
| 0.34 | 1.45 | 1.99 | 0.47 | 1.15 | 1.40 | 0.33 | 1.23 |
| $Z_d$=1.0 and $Z_s$=3.0 | | | | | | | |
| 1.44 | 1.5707 | 3.20 | 0.75 | 1.09 | 0.60 | 0.14 | 1.87 |
| 1.08 | 1.50 | 2.85 | 0.67 | 1.11 | 0.90 | 0.21 | 1.52 |
| 0.50 | 1.45 | 2.31 | 0.54 | 1.15 | 1.40 | 0.33 | 1.31 |
| 6.00 | 1.40 | 1.91 | 0.45 | 1.21 | 1.80 | 0.42 | 1.22 |

Table I. (Cont'd.)

| y(Kpc) | γ(Rad) | $h_1$(Kpc) | $\beta_1$(sec) | $I_1$ | $h_2$(Kpc) | $\beta_2$(sec) | $I_2$ |
|---|---|---|---|---|---|---|---|
| $Z_d$=1.5 and $Z_s$=2.0 | | | | | | | |
| 0.12 | 1.5707 | 0.82 | 0.19 | 1.05 | 0.60 | 0.14 | 1.06 |
| $Z_d$=1.5 and $Z_s$=2.5 | | | | | | | |
| 0.51 | 1.5707 | 1.55 | 0.36 | 1.07 | 0.60 | 0.14 | 1.18 |
| 0.19 | 1.5 | 1.25 | 0.29 | 1.09 | 0.90 | 0.21 | 1.13 |
| $Z_d$=1.5 and $Z_s$=3.0 | | | | | | | |
| 0.74 | 1.5707 | 2.02 | 0.47 | 1.09 | 0.60 | 0.14 | 1.31 |
| 0.42 | 1.50 | 1.70 | 0.40 | 1.11 | 0.90 | 0.21 | 1.22 |
| $Z_d$=2.0 and $Z_s$=3.0 | | | | | | | |
| 0.20 | 1.5707 | 0.99 | 0.24 | 1.06 | 0.60 | 0.15 | 1.10 |

# CHAPTER X

## SUMMARY

As stated in Chapter I, the purpose of this paper has been to investigate the possibility of observing phenomena arising from spiral or flat elliptical galaxies acting as gravitational lenses.

This investigation has been undertaken by approximating galaxies by flat plates of a particular mass density, and by assuming that the gravitational field of such an object is weak enough to allow the application of the linearized theory of general relativity, Under these assumptions, the bending formulae for light passing near the plates in two special cases were obtained - for light passing through the rotational axis of the plate model, and for light meeting a radial line of the plate orthogonally (see Figs. 6 and 8).

With these bending formulae it was then possible to discuss certain specifics of the double imaging phenomena associated with one of these plate deflectors. In particular, we have attempted to obtain an expression for the probability that a double imaging event occurs for sources located at a given redshift. The expression we obtained indicates that the double imaging depends upon the ratio of mass to semi-major axis squared for the deflectors, upon the flatness of the deflectors, upon the fraction of galaxies in the universe with the required flatness, upon the redshifts of the sources, and upon the overall structure of the universe. Choosing deflectors with masses and semi-major axes similar

to our own galaxy effectively eliminates galaxies with axial ratios greater than about 1/6. This in turn means that the candidate galaxies for deflectors must be mostly spirals. About 77% of the bright galaxies in the universe are spirals, but when the dimmer galaxies are also counted the fraction drops down to as low as 37% - we used 50% in most of our estimates. Using such numbers we calculated the fraction of double images expected as a function of redshifts of sources and as a function of the cosmological model. For all cosmological models, only sources at redshifts greater than about 0.5 could be expected to have a reasonable probability of exhibiting double images - this effectively reduces the candidate sources to QSS's. We also found that the probability of expected double sources depends strongly upon the cosmological model. For a model whose mean mass density corresponds to the observed mass density of galaxies($q_o$=0.005), a maximum of about 0.09% of the sources at redshift two could be expected to be double, but in a model with $q_o$=0.5, the number is increased to a maximum of about 5%. Thus, if a large number of double QSS's are observed, the implication would be that the mean mass density of the universe is actually greater than the current estimate of $2\times10^{-31}$ gm/cm$^3$.

It is not enough that the double images exist - they must also be observable. That is, the images must be bright enough to be seen and the angular separation must be sufficient to allow resolutions. All of our estimates in this regard were for the special case of the imaging rays passing through the rotational axis of the deflector and are therefore somewhat limited, but in all specific situations investigated, the

amplification factors for the two images were found to be greater than one. This implies that if the source itself is of sufficient intrinsic brightness to be observed, then both images would be bright enough to be observed. The angular separations of the two images are for the most part below that allowing optical resolution (i.e., less than one second of arc), but should be accessible by long base-line radio interferometry techniques. Perhaps this could explain some of the apparent double source configuration of certain QSS's when they are observed using these techniques[22].

## BIBLIOGRAPHY


1. A. Einstein, Science 84, 506 (1936)
2. F. Zwicky, Phys. Rev. Letters 51, 290 (1937)
3. F. Zwicky, Phys. Rev. Letters 51, 679 (1937)
4. G. A. Tikhov, Kokl. Akad. Nauk. SSSR 16 (1937)
5. F. Zwicky, Morphological Astronomy, Springer-Verlag Berlin, (1957)
6. C. Darwin, Proc. Roy. Soc. A249, 180 (1959)
7. G. M. Idlis and S. A. Gridneva, Izv. Astrofiz. Inst. Acad. Nauk. Kaz. SSSR 9, 78 (1960)
8. Yu. G. Klimov, Kokl. Akad. Nauk. SSSR 148, 789 (1963)
9. A. W. K. Metzner, J. Math. Phys. 4, 1194 (1963)
10. S. Liebes, Phys. Rev. 133, B 835 (1964)
11. S. Refsdal, Mon. Not. Roy. Astr. Soc. 128, 295 (1964)
12. S. Refsdal, Mon. Not. Roy. Astr. Soc. 132, 101 (1966)
13. M. F. Barnothy and J. M. Barnothy, A. J. 71, 846 (1966)
14. J. M. Barnothy and M. F. Barnothy, Nature 226, 335 (1970)
15. T. W. Noonan, Astron. J. 76, 9 (1971)
16. M. Reinhardt, Astr. and Ap. 12, 196 (1971)
17. N. Sanitt, Nature 234, 199 (1971)
18. M. Schmidt, A. Blaaum, Galactic Structure, Univ. of Chicago Press Chicago and London, (1965)
19. D. Mihalas, P. M. Routly, Galactic Astronomy, W. H. Freeman and Co. San Francisco and London, (1968)
20. A. Einstein, Sitzer Kgl. Preuss. Akad. Wiss 831 (1915)

21. P. Bergmann, Introduction to the Theory of Relativity, Prentice-Hall Inc. New York, (1950)

22. M. H. Cohen, W. Cannon, G. H. Purcell, D. B. Schaffer, J. J. Broderick, K. I. Kellerman, D. L. Jauncey, Ap. J., 170, 207 (1971)

## APPENDIX

## The Evaluation of $\partial\vec{\alpha}/\partial x|_{x=0}$ for Light Passing Through the Flat Plate Model

Since $\vec{\alpha}_{p.i.}(x=0)$ is not a function of x, the derivative $\partial\vec{\alpha}/\partial x|_{x=0}$ cannot be evaluated directly. We wish to demonstrate here that Eq. (VI-4) is indeed an appropriate expression.

Begin with the general expression for the bending of light passing near a ring, Eq. (V-2),

$$\vec{\alpha}_r = \frac{4GM(a)da}{2\pi c^2} \int_{\phi=0}^{\phi=2} \frac{(a\cos\phi - x)\,\hat{i} + (a\sin\phi\cos\gamma - h)\,\hat{P}}{x^2+h^2+a^2-2a(x\cos\phi+h\cos\gamma\sin\phi)-a^2\sin^2\gamma\sin^2\phi}\, d\phi \quad .$$

Letting $\vec{f}(h,x,a,\phi,\gamma)$ represent the integrand of the above expression, we can write the general bending formula for light passing near a plate of surface mass density $\sigma(a,a_m)$ as

$$\vec{\alpha}_{p.i.}(x,h) = \frac{4G}{c^2} \int_{a=0}^{a=a_m} a\sigma(a,a_m)da \int_{\phi=0}^{\phi=2\pi} \vec{f}(h,x_o,a,\phi,\gamma)d\phi \quad . \qquad \text{(A-1)}$$

From the results of Chapter V, Eq. (V-7), we know that if

$$\frac{\partial}{\partial h}\left\{\int_0^{2\pi} \vec{f}(h,x,a,\phi,\gamma)d\phi\right\}_{x=0} = g(a,\gamma)\,\hat{P} \quad , \qquad \text{(A-2)}$$

where g is some function, then

$$\frac{\partial}{\partial x}\left\{\int_0^{2\pi} \vec{f}(h,x,a,\phi,\gamma)\,d\phi\right\}_{x=0} = -\,g(a,\gamma)\,\hat{P} \quad . \tag{A-3}$$

Taking the derivative of Eq. (A-1) with respect to h and evaluating at x=0 gives

$$\left.\frac{\partial \vec{\alpha}_{p.i.}}{\partial h}\right|_{x=0} = \hat{P}\,\frac{4G}{c^2}\int_{a=0}^{a=a_m} a\sigma(a,a_m)g(a,\gamma)\,da + \frac{4G}{c^2}\int_{a=0}^{a=a_m}\frac{a\partial\sigma(a,a_m)}{h}\,da \times$$

$$\int_{\phi=0}^{\phi=2\pi}\vec{f}(h,o,a,\phi,\gamma)\,d\phi + \frac{\partial a_m(x,h)}{\partial h}\cdot\frac{4G}{c^2}\,a\sigma(a_m,a_m)\int_{\phi=0}^{\phi=2\pi}\vec{f}(h,o,a,\phi,\gamma)\,d\phi \quad .$$

To simplify further calculations, let

$$J_1 \equiv \frac{4G}{c^2}\int_{a=0}^{a=a_m} a\sigma(a,a_m)g(a,\gamma)\,da \quad ,$$

$$\vec{J}_2 \equiv \frac{4G}{c^2}\int_{a=0}^{a=a_m}\frac{a\partial\sigma(a,a_m)}{\partial h}\,da\int_{\phi=0}^{\phi=2\pi}\vec{f}(h,o,a,\phi,\gamma)\,d\phi \quad ,$$

and

$$\vec{J}_3 = \frac{\partial a_m(x,h)}{\partial h} \frac{4G}{c^2} a\sigma(a_m,a_m) \int_{\phi=0}^{\phi=2\pi} \vec{f}(h,o,a,\phi,\gamma)\, d\phi \ ,$$

so, that we can write

$$\frac{\partial \vec{\alpha}}{\partial h}\bigg|_{x=0} = J_1\hat{P} + \vec{J}_2 + \vec{J}_3 \ .$$

$\vec{J}_3$ can be simplified, by performing the $\phi$ integration as in Chapter V (see Eq. (V-3)). Doing so gives

$$\vec{J}_3 = \frac{8\pi G}{c^2} \frac{\partial a_m}{\partial h} \frac{\sigma(a_m,a_m)}{\sqrt{\left(\frac{h}{a}\right)^2 + \sin^2\gamma}} (-\hat{P}) \ .$$

Now, for light passing through the plate, $\sigma(a)$ is given by

$$\sigma_i(a) = \frac{M(a_o)}{\pi a_o^2} \ln \frac{a_m + \sqrt{a_m^2 - a^2}}{a} \ ; \qquad \text{(A-4)}$$

therefore, $\sigma(a_m,a_m) = 0$, and $\vec{J}_3$ vanishes. In a similar manner, $\vec{J}_2$ can be simplified to

$$\vec{J}_2 = \frac{4G}{c^2} \int_{a=0}^{a=a_m} \frac{a\partial\sigma(a,a_m)}{\partial h}\, da \quad \frac{2\pi}{a} \frac{1}{\sqrt{\left(\frac{h}{a}\right)^2 + \sin^2\gamma}} (-\hat{P}) \ ,$$

which upon rearrangement becomes

$$\vec{J}_2 = \frac{8\pi G}{c^2} \int_{a=0}^{a=a_m} \frac{\partial\sigma(a,a_m)}{\partial h} \frac{da}{\sqrt{\left(\frac{h}{a}\right)^2 + \sin^2\gamma}} (-\hat{P}) \quad .$$

In order to further reduce $\vec{J}_2$, the quantity, $\partial\sigma(a,a_m)/\partial h$, is needed. Now, $\sigma$ is given by (A-4), so direct differentiation gives

$$\frac{\partial\sigma(a,a_m)}{\partial h} = \frac{M(a_o)}{\pi a_o^2} \frac{1}{\sqrt{a_m^2 - a^2}} \frac{\partial a_m}{\partial h} \quad ,$$

and since $a_m$ is related to h by

$$a_m = \frac{h}{\sqrt{\sin^2\gamma(1-e^2) + \cos^2\gamma}} \quad ,$$

we have that $\partial\sigma/\partial h$ is given by

$$\frac{\partial\sigma(a,a_m)}{\partial h} = \frac{M(a_o)}{\pi a_o^2} \frac{1}{\sqrt{a_m^2 - a^2}} \frac{1}{\sqrt{\sin^2\gamma(1-e^2) + \cos^2\gamma}} \quad .$$

Substitution then allows $\vec{J}_2$ to be written as

$$\vec{J}_2 = \frac{8\pi G M(a_o)}{c^2 a_o^2 \sqrt{\sin^2\gamma(1-e^2) + \cos^2\gamma}} \int_{a=0}^{a=a_m} \frac{ada}{\sqrt{a_m^2 - a^2}\sqrt{h^2 + a^2\sin^2\gamma}} (-\hat{P}) \quad .$$

Carrying out the integration then gives

$$\vec{J}_2 = \frac{8GM(a_o)}{c^2 a_o^2 \sin^2\gamma} \frac{a_m \sin\gamma}{h} \sin^{-1}\left[\frac{a_m \sin\gamma}{\sqrt{h^2 + a_m^2 \sin^2\gamma}}\right] .$$

Substitution then allows the expression for $\partial\vec{\alpha}_p/\partial h|_{x=0}$ to be written as:

$$\frac{\partial\vec{\alpha}_p}{\partial h}\bigg|_{x=0} = \frac{4G}{c^2}\left\{\int_{a=0}^{a=a_m} \sigma(a,a_m)g(a,\gamma)da - \frac{2GM(a_o)}{a_o^2 \sin^2\gamma} \sin^{-1}\left[\frac{a_m \sin\gamma}{\sqrt{h^2+a_m^2\sin^2\gamma}}\right]\right\}\hat{P}.$$

Now comparing this expression for $\partial\vec{\alpha}_p/\partial h|_{x=0}$ to the one obtained by direct differentiation, Eq. (VI-3),

$$\frac{\partial\vec{\alpha}_p}{\partial h}\bigg|_{x=0} = \frac{8GM(a_o)}{c^2 a_o^2 \sin^2\gamma} \frac{a_m \sin\gamma}{h}\left\{\sin^{-1}\left[\frac{a_m \sin\gamma}{\sqrt{h^2 + a_m^2 \sin^2\gamma}}\right] - \frac{1}{2}\ln\left[1 + \left(\frac{a_m \sin\gamma}{h}\right)^2\right]\right\}(-\hat{P}),$$

implies that

$$\frac{4G}{c^2}\int_{a=0}^{a=a_m} a\sigma(a,a_m)g(a,\gamma)da = \frac{4GM(a_o)}{c^2 a_o^2 \sin^2\gamma} \ln\left[1 + \left(\frac{a_m \sin\gamma}{h}\right)^2\right]. \quad \text{(A-5)}$$

Taking the derivative of (A-1) with respect to "x", evaluating at x=0 and making use of (A-2) and (A-3), we find that

$$\left.\frac{\partial \vec{\alpha}_{p.i.}}{\partial x}\right|_{x=0} = -\hat{i}\,\frac{4G}{c^2}\int_{a=0}^{a=a_m} a\sigma(a,a_m)g(a,\gamma)\,da \quad ,$$

but this integrand has just been evaluated (Eq. (A-5)); therefore, $\partial\vec{\alpha}_{p.i.}/\partial x|_{x=0}$ is given by

$$\left.\frac{\partial \vec{\alpha}_{p.i.}}{\partial x}\right|_{x=0} = \frac{4GM(a_o)}{c^2 a_o^2 \sin^2\gamma}\ \ln\left[1+\left(\frac{a_m \sin\gamma}{h}\right)^2\right]\ (-\hat{i}) \quad .$$