This dissertation has been 61-2908
microfilmed exactly as received

RINEHART, Edgar A., 1928-
MEASUREMENT OF THE WIDTHS OF MICRO-
WAVE SPECTRAL LINES.

The University of Oklahoma, Ph.D., 1961
Physics, general

University Microfilms, Inc., Ann Arbor, Michigan

Downloaded from SHAREOK. Persistent Handle URL: https://hdl.handle.net/11244/1505

THE UNIVERSITY OF OKLAHOMA

GRADUATE COLLEGE

MEASUREMENT OF THE WIDTHS OF MICROWAVE SPECTRAL LINES

A DISSERTATION

SUBMITTED TO THE GRADUATE FACULTY

in partial fulfillment of the requirement for the degree of

DOCTOR OF PHILOSOPHY

BY

EDGAR A. RINEHART

Norman, Oklahoma

1961

MEASUREMENT OF THE WIDTHS OF MICROWAVE

SPECTRAL LINES

APPROVED BY

Chun C. Lin

C A Levine

J. Rud Nielsen

Arthur Bernhart

William N. Hunt

DISSERTATION COMMITTEE

ACKNOWLEDGEMENTS

The author wishes to express his appreciation to a number of people who have been of material assistance in the completion of this work. First, to Professor Chun C. Lin who suggested the problem and encouraged its completion, to Mr. Neal Lane who assisted in a substantial part of the data-taking process, and to Messrs. O. L. Peronard and J. P. Sweeney who rendered service 'above and beyond the call of duty' in the electronic art.

Especially, the author wishes to thank his wife, Marjorie, who has waited so long to type these words, for the considerable encouragement she has provided.

TABLE OF CONTENTS

Page

LIST OF TABLES vi

LIST OF ILLUSTRATIONS. vii

Chapter

I. INTRODUCTION. 1

Natural Line Width
Doppler Effect
Saturation Effects
Wall Collisions
Pressure Broadening
Instrumental Effects

II. INSTRUMENTAL EFFECTS. 8

The Direct Method

The Indirect Method
Systematic Effects
Square Wave Modulation
Sine Wave Modulation
Background
Sweep Speed
Detector Non-linearities
Non-systematic Effects

III. THE SPECTROGRAPH. 24

Design
The Microwave Source
Detection and Display
Mode Compensators
Frequency Measuring System
Waveguide System
Vacuum System

Chapter Page

Construction
Source
Detection and Display
Lock-in Detector
Mode Compensators
Frequency Measuring System
Waveguide System

Operation
Adjustment Procedures

IV. EXPERIMENTAL PROCEDURE AND RESULTS. 85

Method and Instrument
Klystron Power Level
Background or Klystron Mode Curvature
Sweep Speed
Amplitude of Source Modulation
Frequency of Source Modulation
Sine Wave Source Modulation
Modulation Frequency Harmonics
Detector Non-linearities

Line Width Parameters of Some Ammonia Lines

Ammonia Line Widths and Collision Broadening Effects

Summary

V. METHOD OF TRIPLE MODULATION 107

APPENDIX 113

LIST OF REFERENCES 115

LIST OF TABLES

Table		Page
I.	Calculated and Observed Widths of the 3,3 Ammonia Line at Various Amplitudes of Square Wave Source Modulation	92
II.	Calculated and Observed Widths of the 3,3 Ammonia Line at Various Frequencies of Square Wave Source Modulation	92
III.	Calculated and Observed Widths of the 3,3 Ammonia Line at Various Frequencies of Sine Wave Source Modulation	94
IV.	Calculated and Observed Widths of the 3,3 Ammonia Line at Various Amplitudes of Sine Wave Modulation.	94
V.	Line Width and Pressure Data for the J,K = 6,6 Ammonia Line.	98
VI.	Line Width Parameters in Units of mc/mm Hg.	99

LIST OF ILLUSTRATIONS

Figure		Page
1.	Addition of Background to Line	20
2.	Block Diagram of Spectrograph.	26
3.	Block Diagram of Frequency Standard A.	36
4.	Block Diagram of Frequency Standard B.	36
5.	Repeller and Focus Supply.	49
6.	Klystron Mount and Modulator Connections . . .	49
7.	Sweep Generator.	52
8.	Preamplifier	56
9.	Phase Detector	60
10.	Mode Compensator B	64
11.	Frequency Standard A, 5 mc Oscillator Unit . .	66
12.	Frequency Standard A, 5-30 mc Multiplier Unit.	68
13.	Frequency Standard A, 30-270 mc Multiplier . .	70
14.	Frequency Standard A, 270-810 mc Tripler . . .	72
15.	Frequency Standard A, Power Supply	73
16.	Cross-Sectional View of Microwave Mixer. . . .	76
17.	Oscilloscope Photograph of the First Derivative of the Line Shape.	89
18.	Oscilloscope Photograph of the Second and Third Derivatives of the Line Shape.	89

Figure Page

19. Linewidth vs Pressure of 6,6 Line of the Inversion Spectrum of Ammonia 98

20. Simplified Block Diagram of Triple-Modulation Spectrograph. 108

21. Oscilloscope Photograph of the (4,4) Line of Ammonia. 112

MEASUREMENT OF THE WIDTHS OF MICROWAVE SPECTRAL LINES

CHAPTER I

INTRODUCTION

In optical and infra-red spectroscopy, an important study has long been that of broadening of spectral lines. Of the many processes which broaden the spectral lines, that of collision or pressure broadening has received the greatest interest. At low pressures, however, this work was hampered by Doppler broadening and lack of sufficient resolution of the instruments used, while at higher pressures multiple collisions may complicate the process. With the advent of the high resolution and extreme accuracy inherent in Microwave Spectroscopy, the problem of pressure broadening has become more amenable to solution, and has therefore received a greater share of interest in recent years. [1-6]

The sources of broadening of interest here are:

1. Natural Line Width
2. Doppler Effect
3. Saturation Effects

4. Wall Collisions

5. Pressure Broadening

6. Instrumentation Effects

1. Natural Line Width

From a consideration of transition probabilities and use of the uncertainty relation, one can, by usual methods, [7] show that the order of magnitude of the natural line width will be given by:

$$\Delta\nu = \frac{32\pi^3\nu^3}{3hc^3} |\mu_{mn}|^2$$

For radiation of 1 cm. wavelength and a dipole moment of the order of magnitude of 1 debye, this reduces to a width of about 10^{-7} cycles/sec. If one considers the presence of thermal radiation, which is important even at room temperature in this region, the width will be as large as 10^{-4} or 10^{-5} cycles/sec. Natural line width, then, is negligible in comparison with other processes.

2. Doppler Effect

The Doppler broadening is of considerably greater importance than the natural line width in the microwave region. Townes has shown [8] that for an ammonia molecule at room temperature one may expect that

$$\Delta\nu/\nu \doteq 1.5 \times 10^{-6}$$

For a line at 25 kmc this would be

$$\Delta\nu \doteq 40 \text{ kc}$$

Since the pressures normally in use result in line widths of about 1 mc, the Doppler broadening, although not negligible, is a minor contribution to the total width.

3. Saturation Effects

Saturation broadening results, essentially, from a disturbance of the distribution of the populations of the states of the absorbing molecules. If such disturbance is slight, for either a relatively large number of absorbers, or very low intensity of radiation, the broadening will be slight. As the intensity of the radiation increases, however, the number of molecules in the upper state becomes larger than the number which would result from the distribution at thermal equilibrium. The collision processes which carry off the excess energy of these molecules have, however, not increased. After a new equilibrium point has been reached, the absorption coefficient will have been reduced due to fewer molecules in the lower state. This effect will be most noticeable at peak intensity, and the tails of the absorption curve will be affected proportionately less, resulting in broadening of the line. Expressions for this broadening have been obtained by various methods [8,9,10]. A second effect closely related to saturation is that of "rapid induced transitions".

The effective lifetime of the upper state is reduced due to transitions induced by the high radiation field. At very low intensity this effect will also be negligible. Saturation will again be discussed in connection with experimental results in Chapter IV.

4. Wall Collisions

The absorption process will be interrupted when the absorbing molecule strikes the wall of the absorption cell. One may approximate the resulting broadening from $\Delta\nu = 1/2\pi\tau$ where τ is the mean time between such collisions. One may evaluate τ from kinetic theory and the resulting broadening will be given at $300^{\circ}K$ by

$$\Delta\nu \doteq 10^{4} \frac{A}{V} M^{-1/2}$$

where A is the wall area of the absorption cell, V is the volume of the cell, and M is the molecular weight of the absorbing molecule [8]. For ammonia in an X-band waveguide cell (23mm x 10mm) the resulting broadening is about 5 kc.

5. Pressure Broadening

The most important source of broadening in the microwave region is that produced by collisions between molecules, and considerable effort has been expended [8,11,12] in theoretical investigations of this problem. An expression for the line-shape has been given by Van Vleck and Weisskopf [12] in terms of the mean lifetime

between effective collisions. Their theory has been quite successful in predicting the observed general features of collision broadening, which at low pressures, are: [8]

1. The half-width is proportional to pressure over a wide range.

2. The peak intensity is independent of pressure over a wide range.

3. The apparent frequency is constant.

4. The line shape can be fitted by a simple resonant expression.

At higher pressures the line shape becomes very asymmetric and at high frequencies the absorption reaches a constant value. Both of these latter features are also predicted. This theory is, however, not entirely satisfactory since the half-width,

$$\Delta\nu = 1/2\pi\tau$$

is taken as an empirical parameter. Because the energy involved in transitions in the microwave region is considerably less than the kinetic energy of the molecules, τ determined from kinetic theory will give much smaller line widths than those actually measured.

In an effort to determine τ directly from molecular constants, several theories have been advanced. The most notable of these is the collision theory of P. W. Anderson [11], which predicts essentially the same form of line

contour as the Van Vleck - Weisskopf line-shape expression, with, however, a small shift of center frequency with pressure. A number of other theories have been advanced [13,14,5] to explain pressure broadening and predict the line width parameters as a function of rotational quantum numbers, but as yet neither these nor the Anderson treatment have been thoroughly checked experimentally. This is largely due to the difficulty of making very accurate and reliable measurements of line widths.

Several investigators [1-6] have reported measurements of microwave line widths, both as a function of pressure and of temperature. The earliest of these is the work by Bleaney and Penrose [1,16] on the line width parameters of 17 lines of the inversion spectrum of ammonia. Others [3-6] have investigated both self-broadening and foreign gas broadening of the ammonia spectrum and of the rotational spectrum of OCS and O_2.

6. Instrumental Effects

Both systematic and non-systematic variations of apparent line width can result from a large variety of instrumental effects. The bulk of the work reported herein has been devoted to a careful examination of these effects. These will be discussed in Chapter II, and Chapter III will be devoted to a discussion of methods used to either control or minimize these effects. Results of such

effort will be reported in Chapter IV along with some measurements of self-broadening of ammonia, using these methods. A discussion of the experimental results in terms of the nature of intermolecular forces will also be given. Chapter V includes an alternative method for line width measurements. This method, though somewhat more complicated in nature, is particularly suited for weak lines and exceeds in sensitivity all the previous methods.

CHAPTER II

INSTRUMENTAL EFFECTS

The purpose of this chapter will be to examine carefully and critically all apparent instrumental sources of broadening (or narrowing) of the measured microwave line width. The methods of measurement which have been used in the past will be examined closely for both systematic and non-systematic variations of measured width due to instrumental method.

Instrumental methods for line width measurements may be divided into two general classifications, which, for purposes of this discussion, will be called the Direct and Indirect methods. The Direct method involves obtaining a graph of the absorption versus frequency and measuring the width at the half-absorption points. The Indirect method, on the other hand, uses low level source modulation to obtain a graph of the derivative of the line, from which the frequency separation of the peaks is measured. This separation is then proportional to the line width, assuming a Lorentz shape. As one might expect, the broadening (or narrowing) of the measured line width due to instrumental effects will be considerably different for the two methods.

The Direct Method

The instrumental effects of the direct method of width measurement will depend, to some extent, upon which of two further sub-divisions of method is used. The first of these, used by Bleany and Penrose [17] in the early post World War II period, can be referred to as the cavity method. Essentially, the absorption coefficient of the gas (in this case, ammonia) is measured by its effect on the quality factor, Q, of the cavity. This method is particularly suitable at high gas pressure ($P \doteq 1$ mm Hg) where the line width is larger than the cavity resonance width. In this case the cavity is tuned to several frequencies within the absorption line. At each frequency the change in Q, from the empty cavity to the gas-filled cavity, is determined by the change in height of the cavity resonance as the gas is admitted. Rather than removing the gas between measurements, a strong electric field can be applied to shift the absorption frequency of the line sufficiently far away so that essentially no absorption takes place. There are few systematic instrumental broadening effects to be considered with the cavity method. One cannot exclude the possibility of saturation effects since the lines must necessarily be strong in order for this method to be useful. The relatively high pressures involved will, however, reduce this problem somewhat. Another source of

systematic broadening to be considered is that of non-linearities in the power measuring device used. Such non-linearities, for the strong lines, will introduce an uncertainty in the location of the half-intensity point. At fairly high power (a few milliwatts) the silicon microwave crystals normally used are notorious for their non-linearities. Furthermore, the particular nature of the non-linearity varies from crystal to crystal and with the history of the particular crystal. Bolometers, which measure the resistance of a wire heated by the incident radiation, are somewhat better in this respect, and their behavior is more consistent from sample to sample.

The non-systematic variations of measured width with the cavity method are more serious than the systematic effects mentioned above. The most serious of these is drift of the frequency of the source of microwaves (klystron) during the course of a single measurement of the absorption coefficient. Klystrons, the normal source of radiation for microwave spectroscopy, are particularly susceptible to drift for several reasons. First of all, a change of but a few volts in any of the supply voltages can produce a change in frequency of several megacycles. Therefore, the voltages must be extremely well regulated, since such changes could occur in the course of a measurement. Secondly, the temperature stability, although excellent for the usual applications of klystrons, is marginal for this

purpose. A slight change in air currents (or flow of cooling air) will produce a drift of several megacycles. Since the line width, at these pressures, is likely to be about 20 to 30 megacycles, such drift can introduce serious error.

Other sources of non-systematic variation with this method include fluctuations in the absorption coefficient measurement itself, pressure variations, and accuracy of the calibration and reproducibility of the cavity resonance. The estimated error due to these effects has been reported by Bleaney and Penrose as about 5 per cent [1]. A variation of this method was used by Townes in his report of the ammonia spectrum in 1946 [2]. For pressures above .27 mm Hg, he measured the absorption coefficient at a number of fixed frequencies. Rather than using a cavity, he used a section of wave guide in which the microwaves were reflected from the far end, thus setting up standing waves. By measuring the change in standing wave ratio, with gas and without gas, he was able to determine the absorption coefficient at each frequency. A calibrated resonant cavity was used for frequency measurement. His detection system used a silicon crystal as a mixer for a heterodyne detector. The remarks concerning the cavity system apply equally well here, with the addition that changes in local oscillator power incident upon the

detector crystal could change the operating point of the crystal, hence, due to the non-linearity of the crystal, change its conversion characteristics.

A second scheme of instrumenting the direct method of measurement is to sweep the frequency continuously through the absorption line. This scheme essentially trades some non-systematic variations for a systematic broadening. This is, of course, to be preferred since a systematic broadening may more easily be eliminated or taken into account in the measurements. In this arrangement, a saw-tooth sweep voltage is applied to the repeller electrode of the klystron, resulting in the frequency being swept through a range of several megacycles. This same sweep is used for the horizontal displacement on the oscilloscope. At the same time, the signal from a detector crystal is amplified and used to give a vertical deflection on the oscilloscope. This results in a plot of total absorption of the gas versus frequency. In order to provide a scale factor for the frequency, a signal near the range of the klystron frequency is provided. The sum and difference frequencies between these two signals are generated in another silicon crystal and are amplified by a communications receiver. When the sum or difference frequency passes through that frequency to which the receiver is tuned, there will be a sharp pulse output from the receiver.

This is added to the vertical signal on the oscilloscope, and provides a standard distance on the display which represents a known frequency difference. A photograph may be made from this display and width measurements taken from the photograph. This arrangement as described is essentially that used by Potter, Buskovitch, and Rouse [6]. Similar methods were used by Good [8] and by Townes [2] at pressures below 0.27 mm Hg. The latter two, however, were not primarily interested in measuring line widths with this scheme.

The sources of non-systematic variations eliminated by this method are: klystron drift during measurements, pressure instability (slow variations), cavity calibration (resolution and reproducibility) and fluctuations introduced from absorption coefficient measurements. The sources of systematic variations of measured width are: saturation, an even greater problem since this method is normally used at much lower pressures than the cavity method; crystal and amplifier non-linearities; and sweep rate. This latter is the new source of broadening introduced. In order to avoid distortion of the line shape, the frequency of the slow sweep should be kept below the value which corresponds to one-twentieth of the band width of the amplifier used [8]. The last problem, however, can be controlled by making measurements at

several sweep rates, and using a rate slower than that which causes an increase in measured width. (This effect will in general, cause an increase of width.)

Unfortunately, two new sources of non-systematic variation are introduced by this direct sweep method. The power output of a klystron is not constant with repeller voltage, and, in fact, has a large variation. The output of a 2K33 for instance, will drop to half its peak value in about 30 to 40 megacycles. This tube operates at about 24,000 megacycles and is the most used microwave generator in this range. The widths of lines at the pressures generally used with this method may vary from 1/2 to 5 megacycles or more. Because of this incident intensity variation, or background, the lines will be distorted in a manner which is not easily predicted or measured. Extreme care taken in the course of the measurements will eliminate a considerable part, but not all, of this problem. This amounts to restricting the maximum pressure in order to insure that the line width will be a small part of the klystron "mode" width. (The "mode" is the term generally used for the envelope of source power versus frequency.) A second precaution is that of adjusting the klystron so that the frequency of peak power is the same as the absorption frequency.

A second non-systematic variation is the accuracy and linearity of the frequency scale. A second klystron has been used for the heterodyning frequency standard. The previous remarks concerning klystron stability apply equally well here. Further, the klystron frequency does not vary linearly with repeller voltage, and this non-linearity cannot be determined from the two frequency markers available. Since the shape of the curve of frequency versus repeller voltage depends upon other electrode voltages and mechanical tuning, it is not easy to predict or compensate for this effect.

In concluding this section on the direct method of width measurement, it should be pointed out that this was the early method used and most of this work was done prior to 1950. At that time this was the only method available for obtaining width measurements of microwave lines.

The Indirect Method

Silicon crystal microwave detectors, almost universally used in microwave spectroscopy, have an important noise characteristic. The noise spectrum generated within the crystal by incident radiation has a peak at the very low audio frequencies and falls off rather rapidly with an increase in frequency [8]. It is therefore desirable to reject these low frequency components when amplifying

a signal from a crystal. For this reason, several workers [19,20] began, in 1947, to use modulation techniques so that the absorption signal, after detection, could be amplified at some low radio frequency. The usual method is that of frequency modulation, where either the source frequency, or the absorption frequency is shifted at the modulation rate. The absorption frequency is shifted by Stark effect at high frequencies or, in a few cases, by Zeeman effect at lower frequencies. Karplus [21] has formulated the general theory of frequency modulation in microwave spectroscopy, and has determined the line shape for the high amplitude square wave, and high frequency sinusoidal cases. For these cases, the absorption contour is reproduced with some distortion due to the modulation. More recently, Karplus' theory has been applied to low-level source modulation [22] for both the square wave and sinusoidal cases. At low levels of modulation, the contour is that of the line derivative rather than the absorption shape. In the remainder of this chapter we shall discuss the instrumental broadening effects associated with this method.

Systematic Effects

Square Wave Modulation. Square wave source modulation had not been used up to the time of the work reported here. The application of Karplus' theory to this case

results in the following expression [22]:

$$2\delta\nu \doteq 2(\sqrt{3}\tau)^{-1}(1+\omega'^2\tau^2/4+\nu^2\tau^2) \qquad (2.1)$$

where $2\delta\nu$ is the observed separation between maximum and minimum of the derivative contour, ω' is the change in source frequency with each swing of the modulating voltage, ν is the angular frequency of the modulating voltage and τ is the mean time between collisions. It is seen that $\sqrt{3}\delta\nu$ is the true half width only when ω' and ν are much less than $1/\tau$. The validity and range of usefulness of equation (2.1) will be discussed in Chapter IV.

The harmonic content of the signal appearing at the detector crystal has been examined [22]. For the case of "very slow" and "very weak" modulation, all the even harmonics vanish and the odd harmonics reproduce the first derivative of the line contour but with reduced intensity.

Sine Wave Modulation. Sine wave source modulation has been used by several investigators [23-25] in line width measurements. Although no one group of these workers has examined the results of sine wave modulation completely, both amplitude and frequency variations have been noted. Feeny, et al [4] have used frequencies as high as 600 kc for modulation, and have extrapolated the measured width to zero frequency by taking measurements at several frequencies. Anderson [5] reports a "parabolic"

increase of measured width with an increase in modulation amplitude. He determined, empirically, a limiting amplitude for the applied modulating voltage, and used this for the work reported.

Application of Karplus' theory to this case [22] results in the following relation:

$$2\delta\nu \doteq 2(\sqrt{3}\tau)^{-1}(1+3\omega'^2\tau^2/4+\nu^2\tau^2/2) \qquad (2.2)$$

where, in this case, ω' is the separation between quiescent and peak values of the source frequency, or one-half of the peak-to-peak frequency variation.

The harmonic content of the signal appearing at the microwave detector crystal has also been examined for this case [22]. Again considering only very slow and very weak modulation, the envelope of the second harmonic signal is the second derivative of the line shape contour. Similarly, the third harmonic reproduces the third derivative of the line shape. It was also determined that the line width, except for modulation broadening terms, was just equal to the separation between adjacent peaks of the second harmonic signal, divided by $\sqrt{3}$. Experimental results will be discussed in Chapter IV.

It is also interesting to examine the peak values of the line derivative contour as the width changes. It has been mentioned that the peak absorption for the Van Vleck - Weisskopf line shape remains constant for a wide

range of low pressures, hence, for a wide range of narrow widths. One can see, therefore, that as the width of the line becomes less, the slope of the line shape contour must become steeper, so the peak values of the line derivative contour must become larger. This has been shown in a more sophisticated manner by Lin in reference [22] from an extension of Karplus' theory. As a result of this effect, the sensitivity of the spectrograph should increase with a decrease in the gas pressure over a wide range of low pressures. Of course, when the line width is reduced to the same order of magnitude as the modulation amplitude, this effect would no longer be apparent.

Background

In the absence of an absorption line, the signal appearing at the detector crystal at a particular frequency will be proportional to both the microwave power and the derivative of the power versus frequency curve. The terms "Background" and "Mode Derivative" have been used interchangeably for this spurious signal. Little investigation has previously been made of the effect of this signal upon the measured width. Feeny, et al [4] mention that they found no effect when reflections were deliberately tuned to coincide with the absorption line. Upon careful consideration, one would not expect this result. The appearance of the power versus frequency curve ("mode") is generally

parabolic, and examination of the signal resulting from low level source modulation with phase detection shows a generally straight, but sloping, background as in Figure 1 (a). When the line derivative contour, Figure 1 (b), is combined with this background, as in Figure 1 (c), in the relative phases shown, the minimum and maximum are displaced toward one another. The amount of this displacement will depend upon several factors. Most prominent

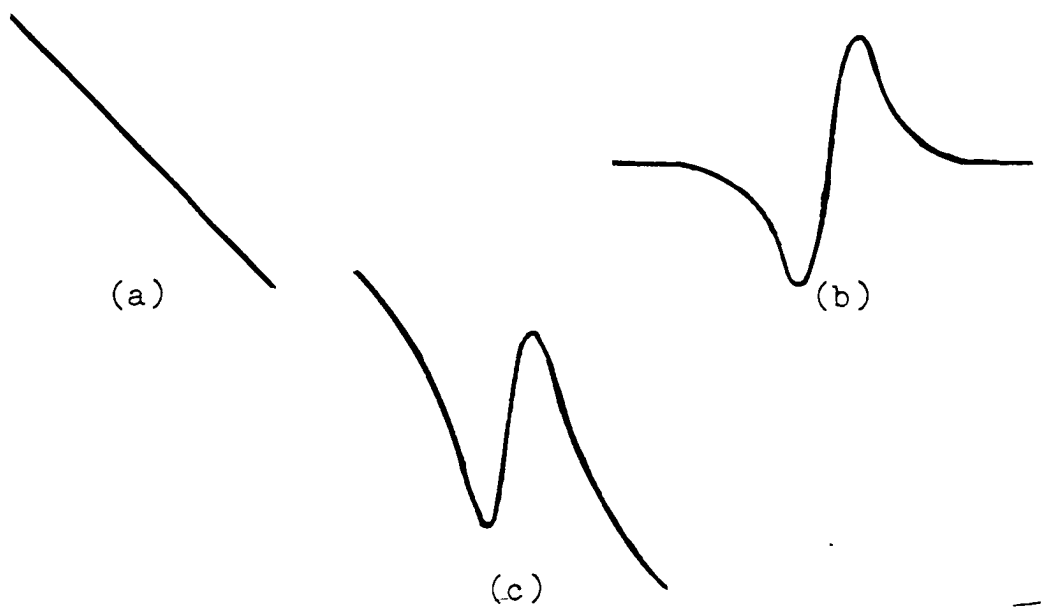

FIGURE 1 ADDITION OF BACKGROUND TO LINE

among these is the intensity of the line. For high intensity lines ($\gamma > 10^{-4} cm^{-1}$) the relative magnitudes of the line derivative contour and the mode derivative are such that the importance of the mode derivative is reduced. In many cases, the mode power envelope from the klystron may be sufficiently flat that its derivative may be ignored.

The length of the absorption cell will be important in that the gas absorption may be increased, while decreasing the amount of microwave power incident upon the crystal. This will further reduce the size, and hence, the narrowing effect, of the mode derivative. Instrumental methods of reducing this effect will be discussed in Chapters III, IV, and V.

Sweep Speed. The effect of sweep speed in the source modulation method is quite similar to that in the direct method. The main difference is that the band width is now centered about the modulation frequency. The use of very narrow band width r-f amplifiers may accentuate this problem, however.

Detector Non-linearities. Non-linearity of both the detector crystal and amplifying system behave in essentially similar manners insofar as the broadening effect is concerned. With the use of the derivative method, the relative amplifications of large and small signals will not displace, at least in first order, the peaks of the derivative curve, although the relative heights may be distorted. For this reason, non-linearities of this nature become second order effects with the derivative method, which constitutes one of the advantages of this technique. Both the saturation effect and cell length correction remain unchanged with this method.

Non-systematic Effects. Two problems are involved here, both connected with the difficulty of aligning the frequency markers accurately with the line derivative peaks. These are: (a) the source spectrum, and (b) the marker instability. The second of these refers to that part of the marker instability arising from the frequency standard. The width of the source spectrum may arise from noise generated in the electron beam of the klystron, from vibrations of the klystron structure and from noise and ripple in the klystron power supplies. With the derivative technique, it is advantageous to use a range of low pressures for line width parameter measurements because of the increased sensitivity. With the resultant narrow lines, however, the source spectrum width is an appreciable fraction of the line width. This will have the effect of broadening and flattening the peaks, thus increasing the difficulty of accurate alignment of the markers. Since the markers are produced by heterodyning the source with the frequency standard, this will also broaden the markers and compound the difficulty. A similar marker broadening effect can be expected as a result of noise and power line frequency ripple content in the output of whatever frequency standard is used. Drift in the frequency of the frequency standard will cause a drift of the location of the markers with respect to the line. If this drift is

appreciable in the time elapsing between measurements of the frequencies of the two peaks, a further error can result. Slight inaccuracies in the frequency of the standard will, however, be less important since differences of the order of less than 1 part of 25,000 are being measured. That is, such fixed frequency errors will introduce a second order effect, since the error will be in the same direction for both frequencies measured and will cancel to a large extent.

CHAPTER III

THE SPECTROGRAPH

Discussion of the spectrograph will be divided into three sections. These sections will cover the design, the construction, and operation of the spectrograph. Electronic details and circuit operation are confined to the second section wherever possible. Operating details and adjustment procedures are contained in the third section. The reader who is not concerned with the maintenance, modification, or operation of the spectrograph may conveniently omit these sections.

Design

The spectrograph is composed of five major sections. These are:

1. The microwave source
2. The detection and display system
3. The frequency measuring system
4. The waveguide
5. The vacuum system

A simplified block diagram of the spectrograph is shown in Figure 2. The klystron is frequency modulated by either a square wave or a sine wave at a frequency between about 3 kc and 150 kc. This modulation is superimposed upon a slow sweep modulation, of the order of 1 cps or less, which sweeps the klystron frequency through several megacycles. The microwave power is fed into the waveguide system through an isolating device such as a ferrite isolator. Part of the power is led off to the frequency measuring system. The remainder, after attenuation to a suitably low intensity, is allowed to pass through the gas in the absorption cell. After being partially absorbed by the gas, the microwaves are detected by a silicon crystal rectifier. The voltage appearing across the crystal varies at the modulation rate and is amplified at that frequency or at harmonics of that frequency. After amplification, this signal is fed to the lock-in detector. This lock-in detector recovers both amplitude and relative phase information. The detected absorption signal, which is now a slowly varying d.c. voltage, is displayed on one channel of a dual channel oscilloscope. The slow horizontal sweep for the oscilloscope is provided by the same voltage which sweeps the frequency of the klystron.

The microwave power which was led to the frequency measuring system is heterodyned with a set of standard frequencies in the mixer. The difference frequencies are

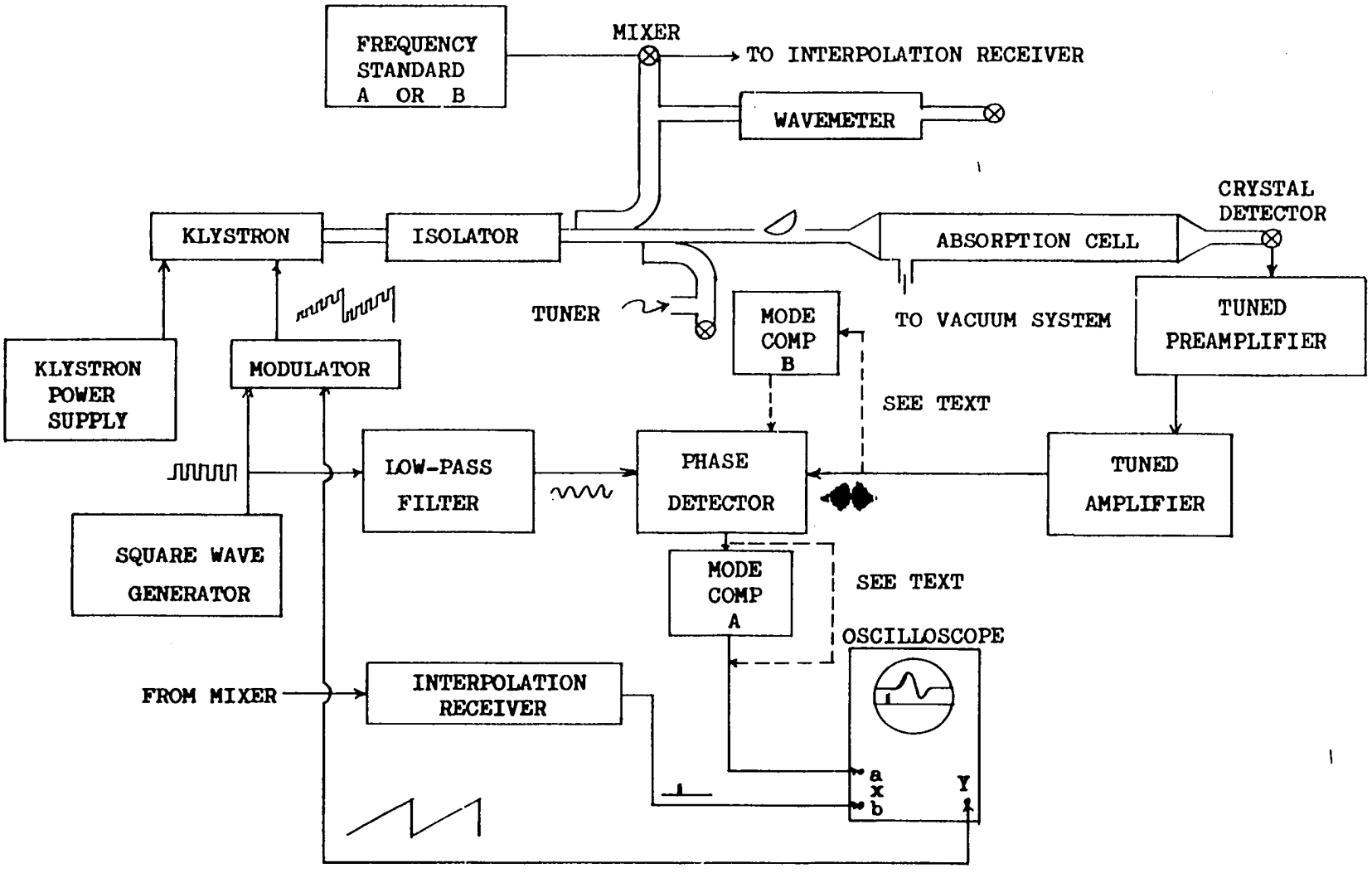

Figure 2.-Block Diagram of Spectrograph

amplified by an interpolation receiver and the resulting frequency marker pips are displayed on the second channel of the oscilloscope.

Under the conditions of low-level modulation, and amplifiers tuned to the modulation frequency, the display oscilloscope now shows the first derivative of the absorption line on one trace, and a set of marker pips of known frequency on the second trace.

The Microwave Source

The source of microwaves must meet, or come as close as possible to meeting, certain requirements. The unmodulated source width should be small. The source should follow the desired modulation pattern without distortion. It should be stable, easily tuned, and should have sufficient power output to provide strong frequency marker pips when mixed with the standard frequencies. The type of source which can most easily be made to approach these requirements is the klystron. The operation of the klystron has been covered extensively in the literature.

Because of availability and relative economy, klystrons of the Raytheon 2K33 family were chosen for the 18 to 36 kmc range. Below this range to about 8 kmc, klystrons of excellent design are available from Varian Associates at relatively "moderate" cost. Although klystrons are available above the quoted range, their

cost and low power output make them less desirable as sources. Frequency multipliers can be used to extend the useful range [25]. Since the bulk of this work was performed with the 2K33 family, discussion will be confined to this type.

The noise spectra of klystrons are poorly known at present [8] but it has been found in this work that the predominant causes of source broadening are: (1) supply voltage variation, and (2) mechanical vibrations of the tube itself.

Required potentials for the operation of these tubes are about 2000 volts. Very slow drift of these potentials is merely very inconvenient, but rapid fluctuations of greater than about 10^{-3} volts cannot be tolerated. The greatest offender on this account is power line ripple due either to inadequate filtering or induced currents in the wiring. Since only the beam voltage must supply current, all other potentials are supplied from well shielded batteries. The beam supply is part of a commercial klystron power supply (FXR). Extra filtering has been provided for it.

The klystron has been shielded from mechanical vibration by a rubberized packing material but the rigid connection to the waveguide system, and the connections of the wires to the tube electrodes, transmitted a detectable vibration to the tube. Air flow from the cooling fan can

cause a surprising source broadening. An idea of the source width can be gained from observation of the appearance of the markers. In the final form of the spectrograph, these markers are about 5 kc wide. Until the flow velocity of cooling air was reduced, marker width was about 10 to 20 kc. No way has been found, as yet, to completely isolate the klystron from vibrations transmitted through the floor from nearby rooms.

The modulation voltages for the klystron are provided from two sources. The high frequency square wave or sine wave is supplied by a General Radio Model 1210c RC oscillator. The frequency of this unit may be varied from 20 cycles/sec to 500 kc/sec and either sine wave or square wave output may be selected. This modulation is applied to the klystron repeller electrode through a blocking capacitor, C_6 Figure 6, having low impedance at frequencies above about 1000 cycles. A resistor of 10^5 ohms resistance is placed in series with the repeller lead to act as a load for the high frequency modulation. An attenuator is provided for controlling the modulation level. The usual modulation voltage applied is in the range of 10 to 200 millivolts, peak to peak. The unattenuated output from the modulation oscillator is used as the reference for the lock-in detector. When square wave modulation is used, the second and higher harmonics are filtered out to provide the necessary sine wave reference.

The slow sweep modulation voltage is provided by the sweep generator. The operation of the sweep generator depends upon the action of an electronic integrator of the type used in analog computers [26]. To begin the sweep, a constant voltage is applied to the input of the integrator. The sweep rate is proportional to this voltage. The direction of the sweep depends upon the polarity of the input voltage. At the end of the sweep the integrator is reset to zero by a thyratron-relay circuit, and the sweep is begun over. The sweep voltage is applied to the repeller electrode through a 35 uf capacitor and the high frequency modulation load resistance. The constant voltage input to the integrator is well filtered and careful attention was given to wiring geometry in order that hum, ripple, and noise voltages would not modulate the klystron. In the earlier use of this unit [27], this sweep voltage was added to the high frequency modulation in an electronic adding circuit. The amplifiers used in both the integrator and adder are commercial units built by George A. Philbrick Researchers, Inc. These units have very high gain at D.C. and low frequencies, hence, when used with feedback, introduce negligible error. At frequencies above 200 kc, however, the gain drops off rapidly, and larger error is introduced. For this reason, the adder was unable to follow accurately a 100 kc square wave. To eliminate this

problem, the high frequency modulating voltage was applied, through a blocking capacitor, directly to the klystron repeller. This has resulted in a much shorter "transit time" in the high frequency modulation. The relation of the "transit time" with frequency measurement will be discussed with the frequency measuring system.

Detection and Display

The detection and display system must perform several functions with minimum distortion or introduction of noise. First, the microwave power, which varies at the modulation frequency, must be detected and the absorption signal recovered. This must be accomplished at power levels as low as 20 microwatts. The absorption signal must remain undistorted and no noise should be added, beyond that generated in the crystal, during amplification, lock-in detection, and oscilloscope display.

The detection and display system begins with a silicon crystal microwave detector (Type IN26) contained in the waveguide detector mount following the absorption cell. The resistive load, R_1 Figure 8, for this crystal is variable so that the optimum load impedance for a particular crystal can be set. Although this reduces the voltage output from the crystal, an improvement in signal-to-noise ratio results. This is followed by a tuned preamplifier of one stage, and a cathode follower circuit to provide a low impedance output.

This preamplifier has been designed for low noise operation. The tuning is in the input and is a series tuned circuit which provides some voltage gain [8]. The amount of gain will depend upon the internal impedance of the particular crystal but is about 20. The amplifier tube is a low noise "shadow grid" type suggested by J. Sweeny. The remainder of the circuit is straightforward. The preamplifier is followed by a commercial tuned amplifier (Rhode and Schwarz type UBM BN 12121/2). This amplifier is tuned by its feedback circuit, and both gain and bandwidth are variable. The amplifier output goes to the lock-in detector. The lock-in detector is a rectifier which is turned on and off at the signal frequency rate by a reference voltage coherent with the signal. The resulting voltage is averaged by a capacitor so that any extraneous voltage in the signal which may be of a different frequency from, or of no fixed phase relation with the reference, is averaged to zero. It is, therefore, a very narrow bandwidth device which is sensitive to both phase and amplitude of the signal voltage. The resulting signal is applied to the vertical plates of an oscilloscope whose horizontal deflection is provided by a saw tooth voltage from the sweep modulator. The particular oscilloscope used is the Tektronics Model 535B with a dual trace input unit. This dual trace unit switches the vertical plates rapidly between two input voltages and

displays these separately. The second input is used for the frequency markers, thus avoiding any distortion of the derivative contour by the marker pips.

Mode Compensators

As was mentioned in Chapter II, the background signal, composed chiefly of the mode derivative, may influence the measured width. Two methods have been used in an effort to reduce errors from this source. Both of these methods are essentially attempts to subtract the mode derivative signal from the absorption plus mode derivative signal. The first of these [27] operates upon the combination signal after phase detection. It has been pointed out that the mode derivative is essentially a straight line when the waveguide system is properly tuned. The slow sweep sawtooth voltage is also linear. The difference between these two may be obtained by use of an adder type circuit. Adjustment of the amount of sawtooth to be subtracted requires judgment as to the appearance of the display. Thus, this type of mode compensation must be regarded as partial, since two consecutive adjustments for the same line may result in slightly different measured widths. The variation is, however, far less serious with compensation than without. The second method of compensation attempts to develop a mode derivative signal, without the absorption line, and subtract before phase detection.

This compensator consists of a single stage tuned amplifier, simple phase shifter, two amplitude controls and a difference amplifier. The klystron signal is detected by a second crystal before passing through the absorption cell, and is amplified at the modulation frequency. This signal and the output from the preamplifier are then matched in amplitude, but inverted in phase, and their difference is obtained by use of the difference amplifier. This combined signal, after further amplification by the tuned amplifier, is phase detected. By careful tuning of the section of waveguide containing this second crystal, the two mode shapes may be made similar over a frequency range somewhat larger than that occupied by the absorption signal. The slope of the base line may then be made zero over this range. An advantage of this type of mode compensation over the previous example, is that the signals are subtracted before phase detection, hence less noise is added to the display signal. A disadvantage of the second method is the greater care required in adjustment. This method also requires a judgment setting, although the oscilloscope may provide some aid to judgment.

Frequency Measuring System

The primary requirement of the frequency measuring system is, of course, accuracy. Ease and speed of measurement are important secondary considerations. The basic idea

of the method used here has been mentioned in the introduction to this chapter. A comparison method, that is, lining up marker pips of known frequency with the peaks of the line derivative contour, requires markers of very narrow width. An important requirement of whatever source of standard frequencies is used, is that sufficient power be delivered to the crystal to produce strong harmonics at the microwave frequency. This leads to the requirement on the mixer that the harmonic conversion efficiency be high.

Two slightly different methods have been used with the spectrograph, and are shown in block diagram in Figures 3 and 4. The operation can be followed from either diagram. The highest of the three standard frequencies is applied to one electrode of the mixer crystal, and the lower two frequencies and the receiver are connected to the other electrode. At the lower frequence end of the crystal is provided a very small capacitance and a small inductance to prevent loss of the higher frequency power into the low frequency circuits. The capacitance is just that of the crystal mount, and the inductance is the self-inductance of the outer electrode of the crystal. In Figure 3, the standard frequencies are 810 mc, 270 mc, and 30 mc with ratios of 27:9:1. The system in Figure 4 uses 1000 mc, 100 mc, and 10 mc. Both systems are provided with impedance matching devices. Line stretchers vary the lengths

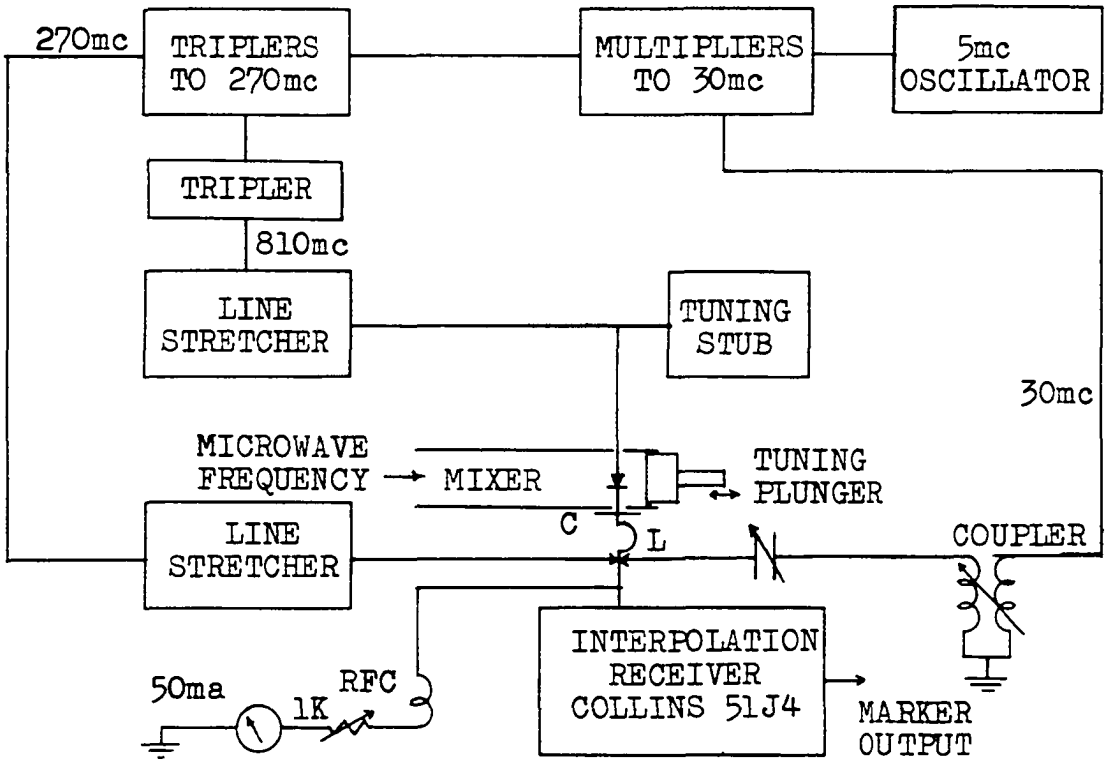

Figure 3.-Block Diagram of Frequency Standard "A"

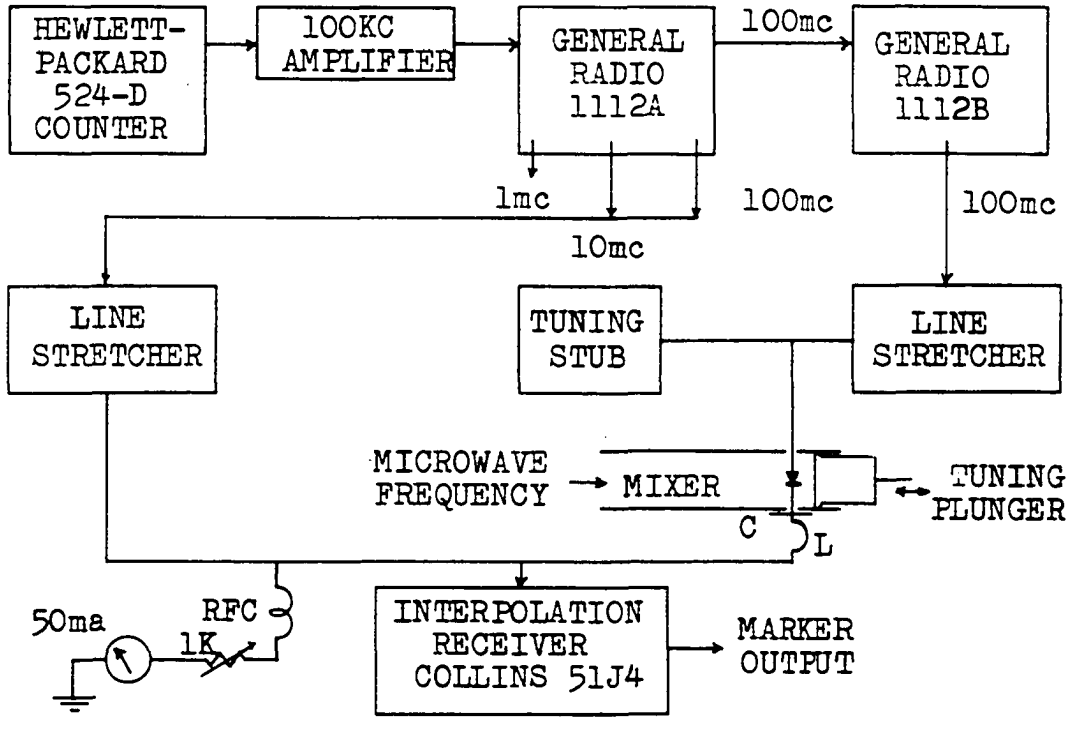

Figure 4.-Block Diagram of Frequency Standard "B"

of the coaxial cables; and a tuning stub, or coaxial line of variable length, shorted at the end, adjusts the line impedance at the crystal. In the system in Figure 3, a coupling device for 30 mc power is provided for the same purpose. Couplers are built internally in the latter system. A meter monitors the crystal current and a variable resistor adjusts the bias on the crystal to optimize the crystal non-linearities for maximum harmonic production. A plunger in the mixer can be adjusted to give a maximum microwave field at the crystal. The present mixer was constructed by the author after more sophisticated mixers suggested by other authors failed to produce markers. In particular, a type of mixer, in which separate crystals are used for harmonic generation and mixing, was unsuccessful in several forms.

With either system, the microwave frequency is given by:

$$f_m = nf_a \pm lf_b \pm mf_c \pm f_r$$

where n, l, and m are integers, f_a, f_b, and f_c are the standard frequencies, and f_r is the frequency to which the interpolation receiver is tuned. It is easily seen that ambiguities exist in the measured frequency. An absorption cavity wave meter is used to establish the frequency within about 2 or 3 mc. If the frequency being measured is close to a harmonic of a standard frequency, one can note the

direction of movement of the marker pip as the receiver is tuned and remove the $\pm f_r$ ambiguity. Widths of known lines are usually measured, hence this ambiguity is important only in the case of closely spaced lines.

The two frequency standards vary in several respects. The first, that is the 810 mc, 270 mc, and 30 mc standard was built locally. This frequency standard utilizes a chain of frequency multipliers and r-f amplifiers to produce the higher frequencies from a 5 mc oscillator stabilized by a quartz crystal. The oscillator crystal is contained in a temperature controlled oven. The manufacturer's specification on the stability of this crystal is 5 parts in 10^7. This represents a variation of 12.5 kc at a frequency of 25 kmc. Such variation represents a marginal satisfaction of required accuracy, and was one of the factors which made the second system desirable. Better accuracy is, of course, obtainable from quartz crystal oscillators of more sophisticated design, and this system is being so modified for such accuracy.

Harmonic generation by frequency multipliers requires a high degree of non-linearity of the amplifiers used. With such non-linearity, any extraneous signal will mix with the desired frequency, and produce a broad spectrum instead of the sharply defined frequency necessary for narrow markers. Such extraneous signals may arise from ripple in

the rectifier power supplies, from the A.C. supplied filaments in the tubes, from any rapid variation of the D.C. bias supplies, and from ordinary thermal noise generated in the amplifiers. For this reason, it is necessary to use very high Q tuned circuits with the amplifiers and multipliers, to filter the D.C. supplies quite well, and to guard against any parasitic oscillations in the amplifiers.

The circuitry used in this frequency standard is straightforward and is similar to other units built for this purpose [28]. At frequencies of 30 mc and above, the tuned circuits are well shielded from one another, and so oriented to prevent undesired coupling. Lumped constant tuned circuits are used at frequencies through 90 mc. The 270 mc tuned circuits are parallel-line shorted stubs. The tripler to 810 mc was constructed in tuned cavity form [29]. The cavity is tuned by changing its length and by changing the capacitance at the open end. Output is taken from a small loop in the region of maximum magnetic field. The power available at 810 mc is about 2 watts. A circuit diagram is included in the second section of this chapter.

The second frequency standard used with the spectrograph is a collection of three commercial units of considerably more sophistication than the one discussed above. The basic accuracy of this system depends upon a quartz crystal oscillator contained in a Hewlett-Packard Model

524-D electronic counter. This oscillator operates at a frequency of 100 kc within 2 parts in 10^8, as specified by the manufacturer. A stability of considerably better than this is expected by the manufacturer after several months of aging of the quartz crystal. For this reason, power is applied to the unit at all times. The frequency multipliers are contained in two units built by General Radio. These are the G.R. Models 1112A and 1112B. The frequency multiplication in both of these units is basically the same. The lower frequency is used as a reference, and harmonics of this frequency are generated. An oscillator operates at the desired multiple of the reference frequency and is compared in a phase detector with the proper reference harmonic. This procedure accomplishes two desirable results. The use of an oscillator at each frequency produces a very pure signal, and each stage in the multiplier chain is effectively isolated from the following stages. The inherent accuracy in such a system is very high, as one can see, remembering the previous discussion of the action of phase detectors. Each stage is locked to the previous frequency within a very few parts in 10^9. This has been checked by examination of the markers produced at frequencies as high as 30 kmc. A convenience results from the choice of frequencies of 1000, 100, and 10 mc.

The interpolation receiver is a Collins Radio Company Model 51J4. This receiver is a crystal-controlled double conversion superheterodyne type originally designed as a very accurate communications receiver. The range of frequency coverage is from 0.5 to 30.5 mc in 30 bands of 1 mc each. The frequency dial of the receiver provides a resolution of 1 kc without judgment interpolation, and an accuracy, with careful calibration, of about ± 300 cps. This is ample for interpolation use. A feature of this receiver is the choice of band width of a mechanical filter in the intermediate frequency amplifier. For marker sharpness, a wide band width must be used, even with very slow sweep. For this reason the audio-frequency amplifiers in the receiver are not used, and the marker output is taken directly from the detector.

The appearance of the markers, displayed on one channel of a dual-trace oscilloscope, depends strongly upon the wave form, frequency, and amplitude of the klystron modulation. For square wave modulation, two markers will appear, separated by the ω' given in equation (2.1). This is the amount by which the klystron frequency is changed with each half cycle of the modulating square wave. The marker appearance is not so simple with sine wave modulation. In this case, a series of markers will appear with a separation, $\nu/2\pi$, given by the modulation frequency. The relative

amplitudes of these markers will be given by the Bessel functions [30], $J_n(\omega'/\nu)$, where $2\omega'$ is now the total modulation excursion and ω'/ν is the modulation index. It can be seen that for low frequency, high amplitude modulation, a very large number of closely spaced markers will appear. The width of this band will vary with modulation amplitude, and even for low modulation amplitude may present difficulties in alignment of "a" marker with the derivative peak. In this case there is no other recourse but to select a peak of the marker band or an edge (which is ill-defined) and use this as a reference point. For modulation frequencies above about 50 kc, the markers become well separated, and a particular marker can be recognized and used for measurements. One may now recognize the importance of using a very flat square wave. If the square wave modulation becomes rounded, a series of closely spaced markers will replace each of the pair mentioned above. This, of course, reduces the effective resolution of the frequency measuring system. With the present system, frequency measurements are repeatable within less than 5 kc. For strong lines, some series of measurements have been repeated to within less than 1 kc.

Waveguide System

The primary function of the waveguide system is to provide a path for the microwaves through the gas under

study. Auxiliary functions are to reduce the intensity of the microwaves below a level which would cause saturation, to provide a path to the frequency measuring system, and to lead the microwaves to various auxiliary detectors. The system is shown in the block diagram in Figure 2. For the frequency range of interest in this work, (18 - 30 kmc), "K" band waveguide has been used except for the absorption cell, which is constructed of "X" band waveguide. "K" band waveguide is 1/4" X 1/2" and X band waveguide is 1/2" X 1" in exterior dimensions. The microwave power from the klystron enters the waveguide through a Ferrite isolator. This isolator has little loss for microwaves propagating in one direction, but high loss in the other direction. The Ferrite material in the isolator is, at least macroscopically, ferromagnetic, but has low conductivity. In the forward direction, the waveguide is twisted so that the plane containing the E vector remains perpendicular to the broad face of the waveguide. The plane of polarization is rotated through 45°. For a wave propagating in the opposite direction, the rotation of the plane of polarization is such that both the Faraday rotation and the twist of the waveguide add to produce a 90° rotation. An absorbing material, usually a coating of graphite on an insulating card, is placed parallel to the broad face of the waveguide and in its center. E is now parallel to

this conducting plane, hence the wave propagates only a very small distance before absorption takes place. This device effectively eliminates any detuning effects on the klystron due to reflected waves.

A directional coupler leads microwave power to the frequency measuring section of the waveguide system. This section consists of a wave meter, detector, and the previously discussed mixer. This detector is used to monitor the klystron output and to observe the wavemeter dip for rough frequency measurement. A Hewlett-Packard "K" band variable attenuater is used to reduce the intensity of the microwaves before leading them into the absorption cell. Transition sections from "K" band to "X" band are used at each end of the absorption cell. These transition sections change the size of the waveguide gradually over a distance of several wavelengths to avoid reflections. The waveguide system is terminated in a "K" band crystal detector mount containing a 1N26 silicon crystal detector. Both crystal detector mounts are tunable for maximum signal.

The connection of many waveguide components into one system involves a large number of waveguide flanges which must cause the waveguide to meet without breaks or discontinuities in the interior surface. A special tool was constructed consisting of a block of aluminum accurately machined to the interior dimensions of the

waveguide. This was used as an alignment device for connecting sections of waveguide. Thus, reflections in the waveguide were at least considerably reduced.

Vacuum System

The design aim has been to achieve a stable, static, clean vacuum system operating in the range of 10^{-3} to 10^{-1} mm Hg. The system is composed of the usual assortment of forepump, glass oil diffusion pump, glass cold traps, stopcocks, and McLeod gauge. This glass system is connected to the brass absorption cell whose ends are sealed with thin mica windows. The system presented no major problems, but a series of vexing minor problems presented themselves. These problems were mainly concerned with avoidance of leaks in making seals. The fact that ammonia, the gas most often being studied, was absorbed strongly onto brass caused a long-term pressure instability which resembled leaking. This instability sometimes caused several hours delay in making measurements.

The pumps used with the vacuum system are a Welch Duo-Seal forepump and a glass, forced-air cooled, oil diffusion pump of about 1 inch throat diameter. Pumping speed is sufficient to exhaust the system (when tight) from atmospheric to about 10^{-7} mm Hg in a few minutes.

The McLeod gauge, constructed by Mr. Robert Lawrence, was carefully calibrated and "accurized" according to accepted practice [31]. This involves the use of precision bore tubing which has been very carefully and gently etched on the interior surface. This etching process was accomplished by the use of number 600 grit grinding compound, and a small copper wire through the tubing to carry the grinding compound. The purpose of etching is to avoid sticking of the mercury column to the interior of the tubing, and to help in making constant the capillary force. After etching, the three inches nearest each end of the tubing were discarded since the bore size was no longer constant. The center three inches was retained for calibration purposes. The end nearest the center of each of the two pieces used is placed at the top of the gauge to minimize any error due to remaining size variation. The top of the closed section of tubing was sealed with a plug rather than by fusing, to avoid destruction of the etched surface. This plug also avoids a size variation of the top of the closed tubing. The volume of the bulb of the gauge was calibrated by the usual mercury weighing technique, using the scales of the State of Oklahoma Research Institute. The volume of the bulb is 209.97 cm^3 at 25.28°C. The diameter of the tubing of the gauge was also measured by a mercury weighing method. The length of

a drop of mercury in the tubing was measured with a microscope used for measuring track lengths of nuclear particles in emulsions. This microscope was loaned for this purpose by the Nuclear Emulsions Laboratory of the University of Oklahoma. The average deviation of seven measurements was about 3×10^{-3}mm in a length of 45.198mm. The mass of this mercury drop was determined on the balances of the Infrared and Raman Spectroscopy Laboratory of the University of Oklahoma. The mass was 0.19894gm, resulting in a diameter of .64494mm. Variations in measured pressure at a pressure of about 20 microns Hg, were about $\pm$ .05 microns.

The absorption cell is a 15 foot length of brass "X" band waveguide sealed with mica and mylar windows. A sheet of mica about .005 inch thick is pressed against a sheet of .002 inch mylar plastic. The mica sheet provides strength across the area of the window, and the mylar extends outward to an "O" ring seal in the flange. The "O" ring is lightly coated with Dow-Corning silicone stopcock grease, and clamped tightly into its groove by the flange. A vacuum connection is made to the absorption cell through a series of small holes in the center of the broad face of the waveguide. A brass tube is brazed to the absorption cell over these holes, and is connected to the glass vacuum system by a ball and socket joint at the other

end. This ball and socket joint is sealed with black Apiezon wax. Several other sealing agents were found to be unsatisfactory. The exterior of the absorption cell was sprayed with clear plastic "Krylon" to seal pinhole leaks (Suggested by R. A. Howard). This was found to be a valuable and time saving method of eliminating small vacuum leaks in the system.

Arrangements of stop-cocks and taper joints are provided for attaching sample bottles to the system. An auxiliary vacuum system is used to transfer gases to sample bottles from other sources.

Construction

This section covers the electronic details and specific circuitry which were not covered in the previous section. It follows, as much as possible, the same order of presentation with the exception of the waveguide and vacuum systems.

Source

Two items need be covered with regard to the source. These are the klystron power supply and the modulation system. The high frequency modulation will be considered along with the power supply, and the sweep modulator will be covered separately. The schematic diagrams of the repeller and focus supply, and the klystron

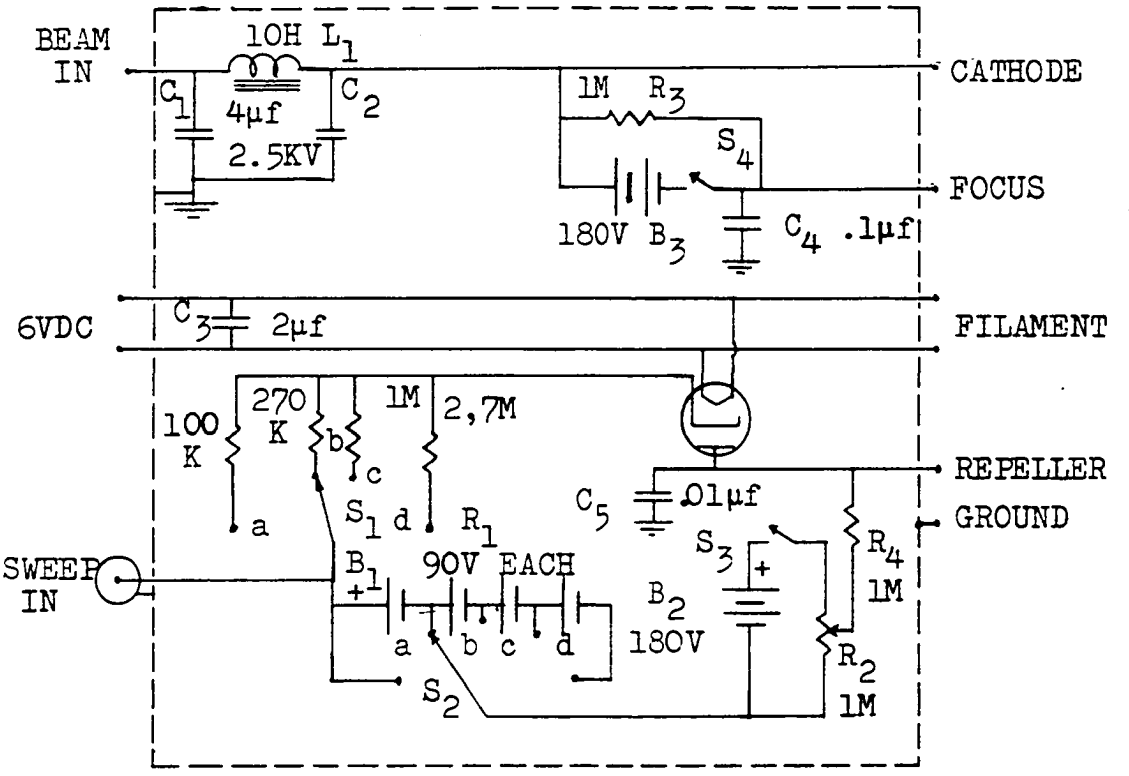

Figure 5.-Repeller and Focus Supply

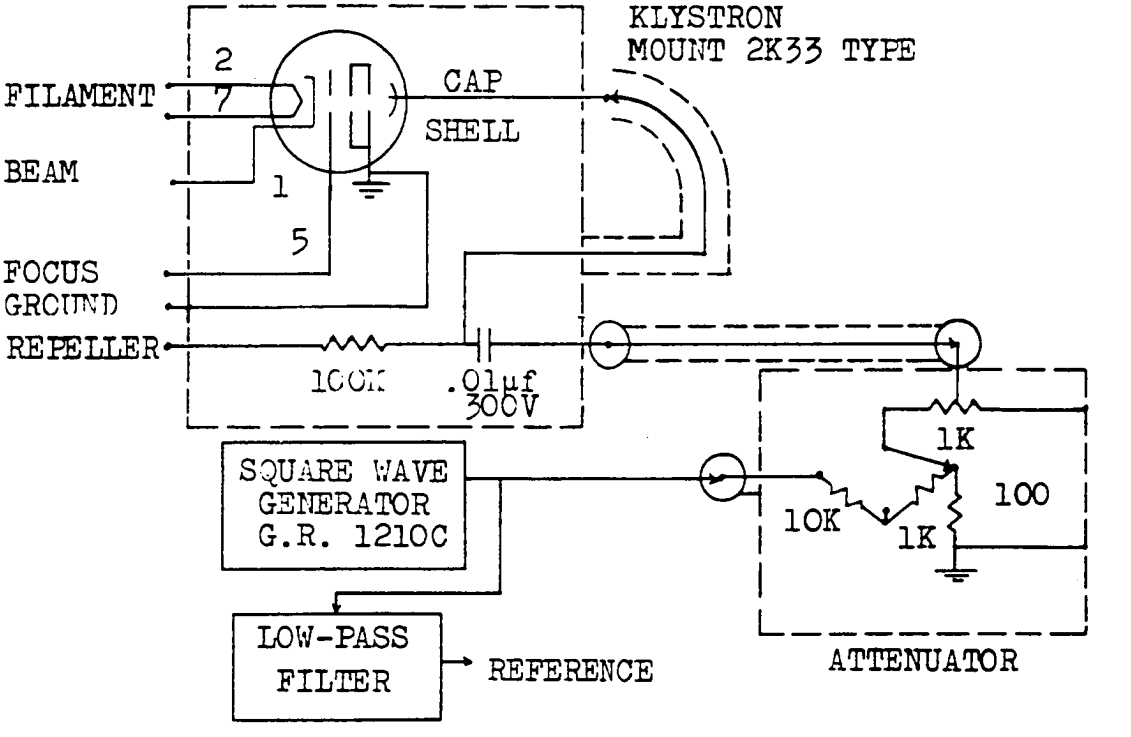

Figure 6.-Klystron Mount and Modulator Connections

mount with the high frequency modulation connections, are shown in Figures 5 and 6. The repeller and focus supply, Figure 5, is essentially a container for batteries and means of varying the voltage output from the sets or batteries. The beam supply, from the FXR Model klystron power supply, is filtered by the π network composed of the 10 henry choke and two 4μf capacitors. The 6 volt filament supply is provided from an external storage battery. Additional filtering for high frequencies is provided by the 2μf capacitor. The low speed sweep voltage is brought into the supply by a u.h.f. coaxial fitting and is applied across a load resistor chosen by S_1. This sweep voltage is coupled through a 35μf capacitor in the sweep generator, so, with the 1 meg load for instance, the time constant of the circuit is 35 seconds. This large time constant allows the very slow sweep to be capacitively coupled without large deviation from linearity. The repeller voltage, supplied by batteries B_1 and B_2, is added to the sweep voltage, which is now referred to the beam voltage. Since the sweep voltage may go both positive and negative, and the battery voltage from B_1 and B_2 may be zero, a diode, 6X4, is provided to prevent the repeller electrode from going positive with respect to the beam voltage. A short period of flow of repeller current caused by a positive

repeller voltage, will damage the repeller of the 2K33 family of klystrons in such a way as to cause several different nearby repeller voltages to produce the same frequency. Such current will be limited by R_4 in case of malfuction of the 6X4 diode. The value of repeller voltage is chosen by S_2 and R_2. The focus voltage is provided in a similar fashion by B_3 and varied by R_3 to obtain the desired beam current. High frequency filters, in the form of capacitors C_4 and C_5, are provided to reduce noise modulation of the klystron. The klystron mount, Figure 6, is a metal box containing the circuits shown, and of a height such that the weight of the klystron is supported a proper distance above the table for ease of connection to the waveguide system [27]. This reduces possible distortion of the klystron cavity due to weight of the klystron. This in turn reduces "microphonic" width of the source signal. The high frequency modulation is coupled to the repeller through C_6 and appears across R_5. The high frequency, and slow sweep modulation voltages are added in this manner. The modulation attenuator is self-explanatory. The low pass filter uses the Dorsett Laboratories telemetry filters at modulation frequencies below 35 kc, and the self-contained filter at higher frequencies [27].

The slow speed sweep generator is shown in Figure 7. The switch, S_2, is shown in the positive sweep position. This refers to the direction of the sweep voltage at the

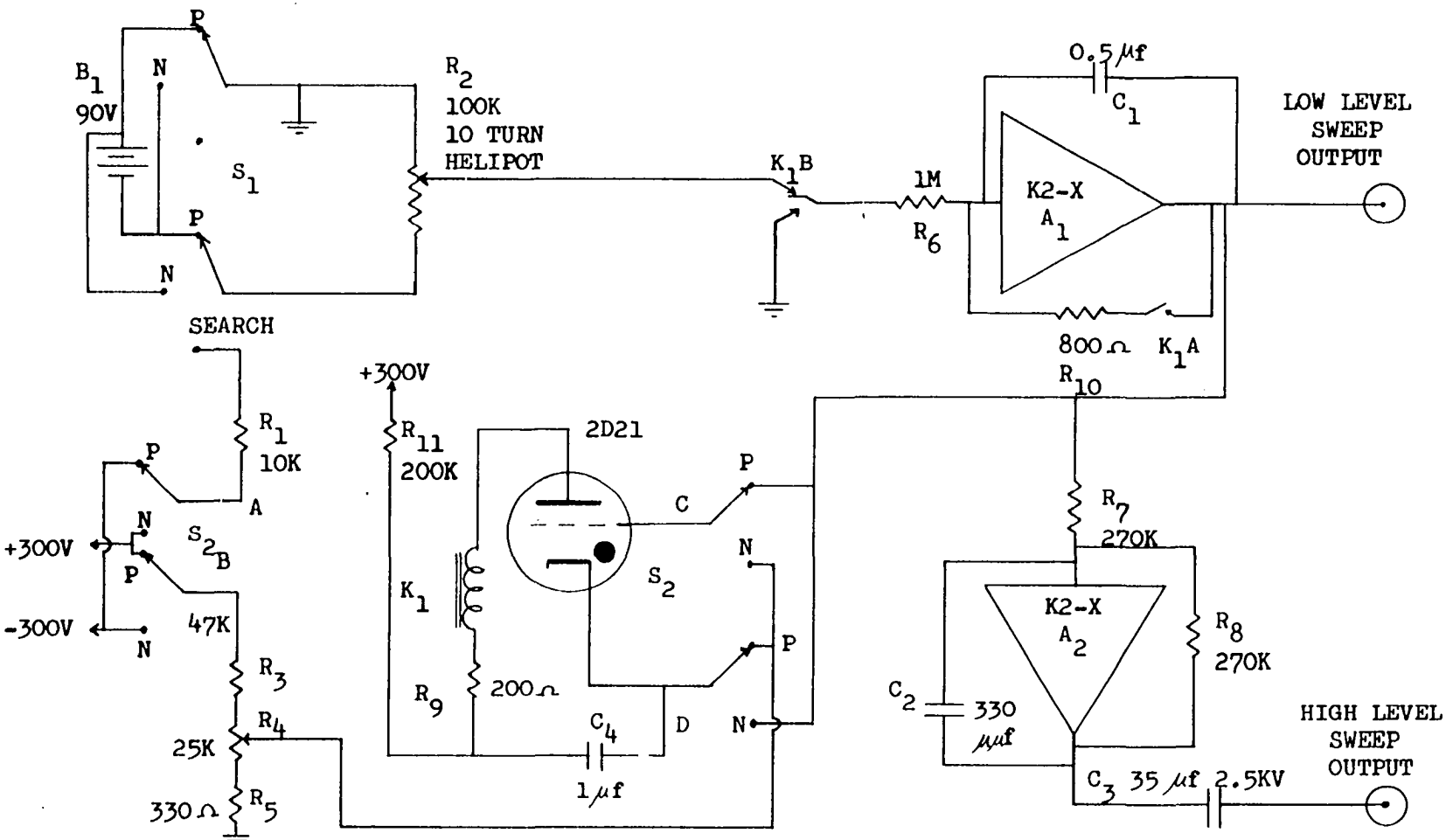

Figure 7.-Sweep Generator

low level output. S_1 is shown in the "scan, positive" position. This is the position for making actual width measurements. The other position of S_1 is the search position. Relay contacts, K1A and K1B, are in the de-energized position. Let us assume that the relay, K1, has just released into the de-energized position. A negative voltage is now applied to the input of amplifier, A_1, whose feedback network C_1, and R_6, is arranged as an integrator. The action of such an integration circuit is to produce an output voltage which is proportional to the time integral of the input voltage. The output voltage is given by $e_o = -kt$ where k depends upon the time constant R_6C_1 and the value of the input voltage. The output voltage has, therefore, a positive-going sawtooth, or ramp, shape. This voltage is connected by S_2C and S_2D to the grid of the 2D21 thyratron. The cathode of the thyratron has been preset at some positive voltage from R_4. When the positive going output of A_1 has reached some critical voltage, the thyratron will conduct. This critical voltage will depend upon the voltage appearing at the plate of the thyratron, but in this application will be about 5 volts more negative than the cathode. When the thyratron conducts, C_4 is discharged through the relay coil, K1. Since the charging time constant for C_4 is long, the plate voltage of the thyratron will very quickly drop below the point at which conduction can continue,

and the grid will regain control. During the time the relay, K1, is closed (determined by R_9C_4), the input to the integrator is connected to ground, and the integrating capacitor, C_1, is discharged. This resets the integrator to zero voltage output and restarts the cycle. The function of the amplifier A_2 is essentially isolation of the klystron sweep from the oscilloscope sweep. In the process, the direction of sweep is inverted. The gain of amplifier A_2 is unity. Capacitor C_2 provides a gain of much less than unity for high frequency components, and, by slight integrating action, tends to compensate for non-linearities introduced by the capacitive coupling of the slow sweep voltage. All the leads which have a high impedance to ground are shielded by open loop shields to prevent hum pickup. Close attention has been given to wiring geometry to prevent hum modulation of the klystron sweep voltage. When a faster sweep is desired for searching purposes, S_1, may be switched to the search position. Since hum modulation is not a problem for searching, this voltage is supplied by the high voltage D.C. supplies. All filaments are referred to about 50 volts positive so that no filament to cathode current can introduce hum.

Sweep slope is varied by R_2, which varies the voltage to be integrated by A_1. Sweep amplitude is varied by R_4. In the negative sweep position of S_1 and S_2, the

2D21 thyratron cathode-grid circuit is essentially inverted so that the grid remains fixed, and the cathode follows the negative going sweep output from A_1. The amplifiers used are Philbrick K2-X D.C. amplifiers having an open-loop gain of 30,000 at D.C. and low frequencies. In this application, the output impedance is less than one ohm.

Detection and Display

As mentioned perviously, this system is made up of the preamplifier, tuned amplifier, lock-in detector, mode compensators, and the oscilloscope. Of these, the preamplifier, lock-in detector, and mode compensators were constructed in this laboratory. The preamplifier circuit diagram is shown in Figure 8. The input to the preamplifier comes directly from the 1N26 crystal rectifier in the waveguide detector mount. The D.C. load for the crystal is R_4, which is adjusted for maximum signal to noise ratio. The preamplifier is tuned by C_1 and L_1, L_2 or L_3. This circuit provides voltage gain before tube noise is introduced. Since gain is claimed for a passive network, careful explanation is in order. First of all, one must remember that the crystal rectifier has a low internal impedance. Since it supplies a series resonant circuit, the current will be limited only by the crystal's internal resistance, the resistance of the inductor, and the power available at the crystal. One choses C and L so that they

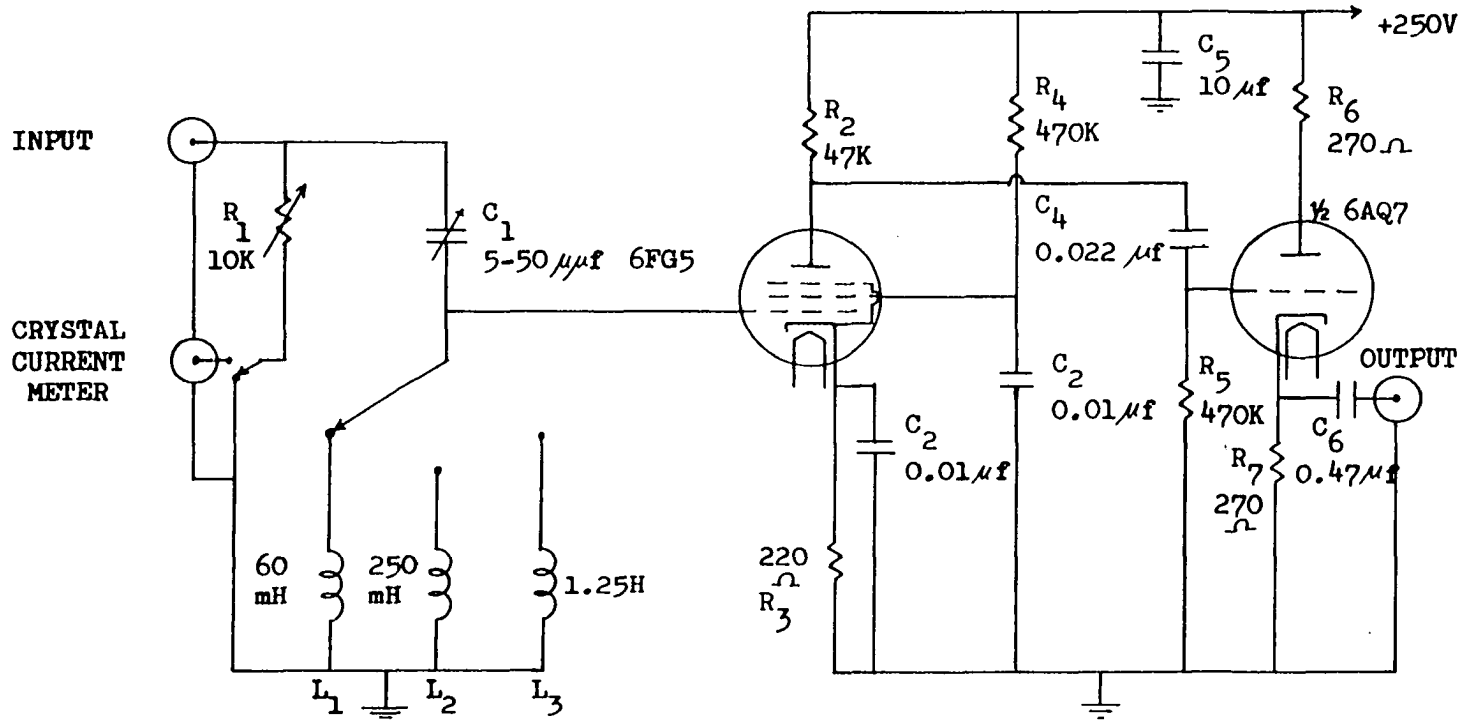

Figure 8.-Preamplifier

have reactance at the resonant frequency; therefore, the impedance of the inductor will be high. This, coupled with the relatively high current in the inductor, results in a higher voltage, at the grid of the amplifying tube, than that which appears at the input connection. We may, therefore, speak of a voltage gain for the circuit. The effective input resistance is the crystal resistance in series with the parallel combination of the resistance of the inductor and R_1. The resulting low input resistance is of great assistance in reducing the noise figure of the preamplifier. In other words, this enhances the ability of the preamplifier to amplify the signal without adding noise. As mentioned previously, the 6FG5 tube has been designed for low-noise preamplifier applications, and is described as the "shadow-grid" type. This name refers to the fact that the elements of the screen grid are placed directly behind the elements of the control grid. The screen grid is in the electron shadow of the control grid, and receives very little electron current. The screen grid can therefore perform its function of a Faraday shield and still not introduce noise due to the nearby passage of electrons. The remainder of the preamplifier is straightforward. The low impedance output is used to match the coaxial line impedance, and to reduce stray hum pickup. Filaments are supplied by D.C. and the plate voltage is well filtered to reduce hum content in the signal.

Lock-in Detector

The action of phase, or lock-in, detectors has been discussed, in general, in a previous section. It will be recalled that the action is essentially that of a rectifier which is turned on and off by some reference voltage. This reference must be of the same frequency as the signal and coherent with it. The reduction in bandwidth results from the following operation. As long as the signal is constant, and in fixed phase relation with the reference, the detector will conduct for a fixed ratio of each cycle, which results in a constant voltage output. When this signal voltage changes, the detector conducts either more or less, depending upon phase; thus changing the output voltage in proportion to the change in signal. This output voltage is usually averaged, by filtering, over several cycles. Another voltage of differing frequency from, or of no fixed phase relation with, the reference will produce no voltage output after the averaging process. If the time constant of the filtering circuit is sufficiently great, then frequencies close to the desired frequency will be averaged to zero. The bandwidth of such a detector depends only upon the filtering circuit and, for a resistance-capacitance filter, is equal to 1/RC. The phase detector used in this application,

Figure 9, is actually two such detectors arranged so that the output voltages add. Thus, both half-cycles of the signal are utilized. For proper operation, this phase detector requires a rather high voltage (10 - 100 volts) reference square wave which can be shifted in phase, and signal voltages of opposite phase. The other circuits of the lock-in detector have been designed to provide these required voltages. The difference amplifier and phase splitter provide voltages of equal amplitude and phases of 0°, 90°, 180°, 270° with respect to the reference phase.

The phase shift capacitor is geometrically arranged so that any phase from 0° to 360° may be selected by rotation of the rotor. This is amplified and used to trigger the Schmitt discriminator which produces the requisite square wave reference. The signal phase splitter produces the required opposing phases of the signal. Detailed operation of these circuits follows.

The reference voltage, of a few volts magnitude, is brought from the low-pass filter to the reference input. The exact magnitude required depends upon frequency and is set to the maximum value possible without apparent distortion. This reference is fed to a rather standard R-C circuit which can be adjusted to produce a difference in potential between points A and B, which is equal in magnitude to, and lags by 90°, the input voltage. Since

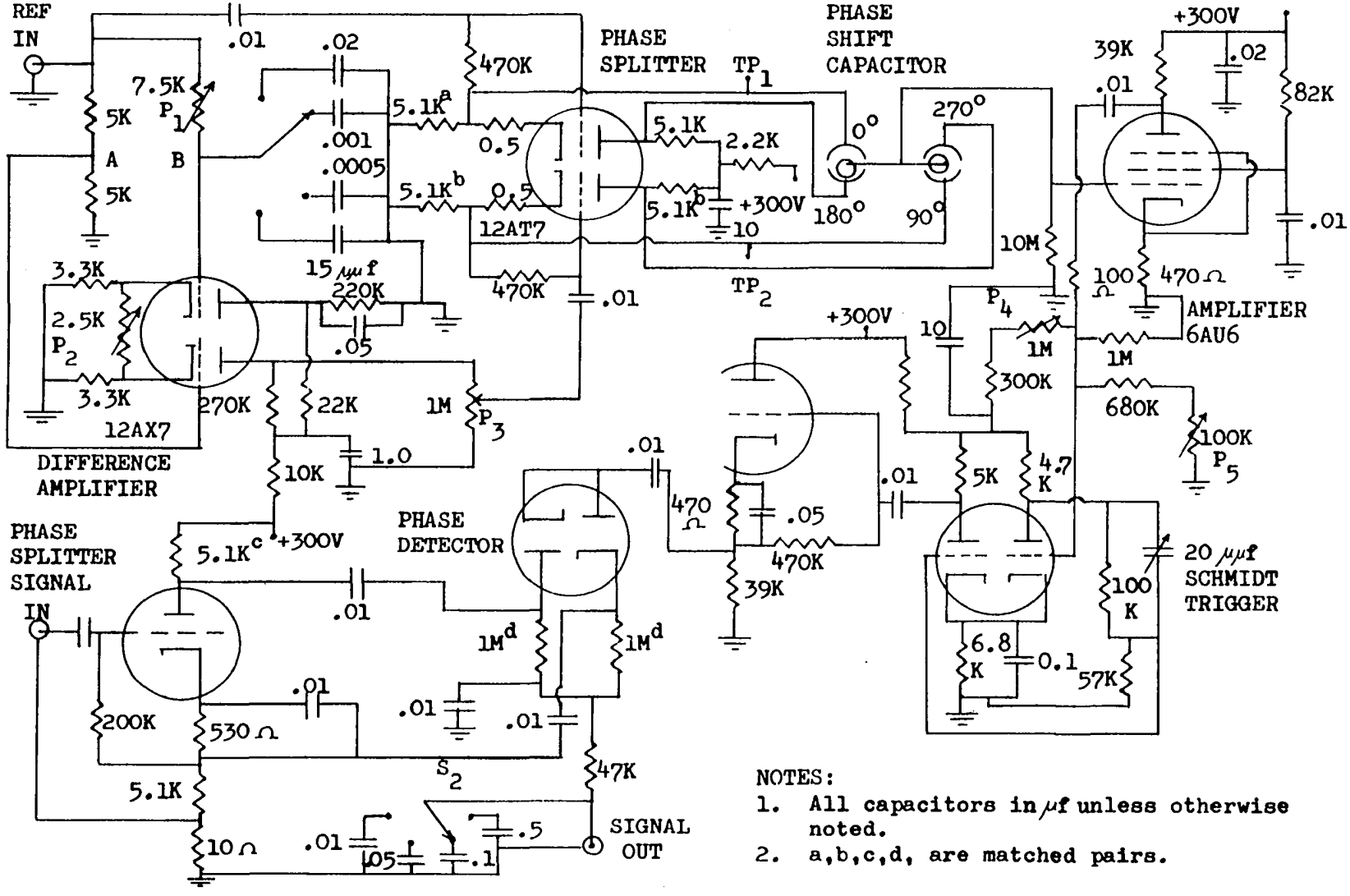

NOTES:

1. All capacitors in μf unless otherwise noted.
2. a,b,c,d, are matched pairs.

Figure 9.-Phase Detector

this voltage is not referenced to ground, and use of a transformer was undesirable because of frequency response, a difference amplifier was used. The voltage at point B is fed to the grid of one-half of the difference amplifier which acts as a cathode follower. This is coupled to the cathode of the other half of the tube, and the voltage at point A is connected to the grid of this triode. Since the conduction of the tube depends upon the difference between grid and cathode voltages, the drop across the plate load resistor, 270K, is proportional to the voltage between points A and B. A variable fraction of this voltage is fed to one-half of the phase splitter, which is actually two split-load phase inverters [32]. The reference signal is fed to the other grid of the phase splitter. Since the same plate current flows through the plate half and the cathode half of the load resistance, the same voltage will appear across each, but opposite in phase. These four voltages, now differing in phase in steps of 90°, are applied to the stator plates of the phase shift capacitor, Cardwell KS-8534. This capacitor has two sets of split-stator plates arranged parallel to one another. The rotor consists of two sets of circular rotor plates meshing with the stator plates. These circular rotor plates are mounted off-center and one set is rotated 90° with respect to the other. Thus, when one rotor plate is fully meshed with

the half-stator set carrying, for instance, the 90° phase signal, the other rotor is meshed equally with the 0° and 180° sets, whose voltages are equal. The net voltage coupled to the second rotor from the 0° - 180° stators is therefore zero. Partial meshing (at a point between the 90° points) will produce partial cancellation which results in a signal whose phase is equal to the shaft rotation of the capacitor. Within the limits of construction tolerances, the output voltage will be constant if all phases and amplitudes have been carefully set. Due to the small capacitance, the output voltage is small and insufficient to trigger a square wave producing circuit directly. It is therefore amplified in a pentode amplifier with some negative feedback through the unbypassed cathode. The amplified reference now passes to the Schmitt discriminator whose action has been described elsewhere [33]. The controls P_4 and P_5, are used to adjust the symmetry of the square wave from the discriminator. This square wave is then fed through a cathode follower to the phase detector. The signal phase splitter action is identical with the reference phase splitters. The grounding of the signal input through a ten ohm resistor helps to break troublesome loops in the ground path. The action of the controls is as follows: S_1 and P_1 are used to adjust the 90° shift in reference phase for different frequencies.

The potentiometer, P_2, is essentially a negative feedback path in the difference amplifier and helps to improve the output wave form. P_3 is the amplitude control for the 90° phase. The phase shifter has been described as have P_4 and P_5. The switch, S_2, selects various filter capacitors used to reduce bandwidth, as has been described. The two test points on the phase shift capacitor are used to observe, with an oscilloscope, these voltages when adjusting P_1 and S_1. The lock-in detector has operated from below 5 KC/sec to above 100 KC/sec and gives satisfactory performance over this frequency range.

Mode Compensators

The first of the two mode compensators discussed previously is the adder type. This mode compensator consists of a Philbrick K 2-X operational amplifier connected as an adding circuit with three inputs. Two of these inputs are used for the mode, and mode plus line signals, and the third may be used for the addition of markers to the display when a dual-trace oscilloscope is unavailable.

A circuit diagram of the second is shown in Figure 10. Some of the circuits may be recognized as similar to others used elsewhere in the spectrograph. The 6AG5 pentode amplifier is tuned in the same manner as the preamplifier. One 12AX7 is connected as a difference amplifier similar to those used in the lock-in detector,

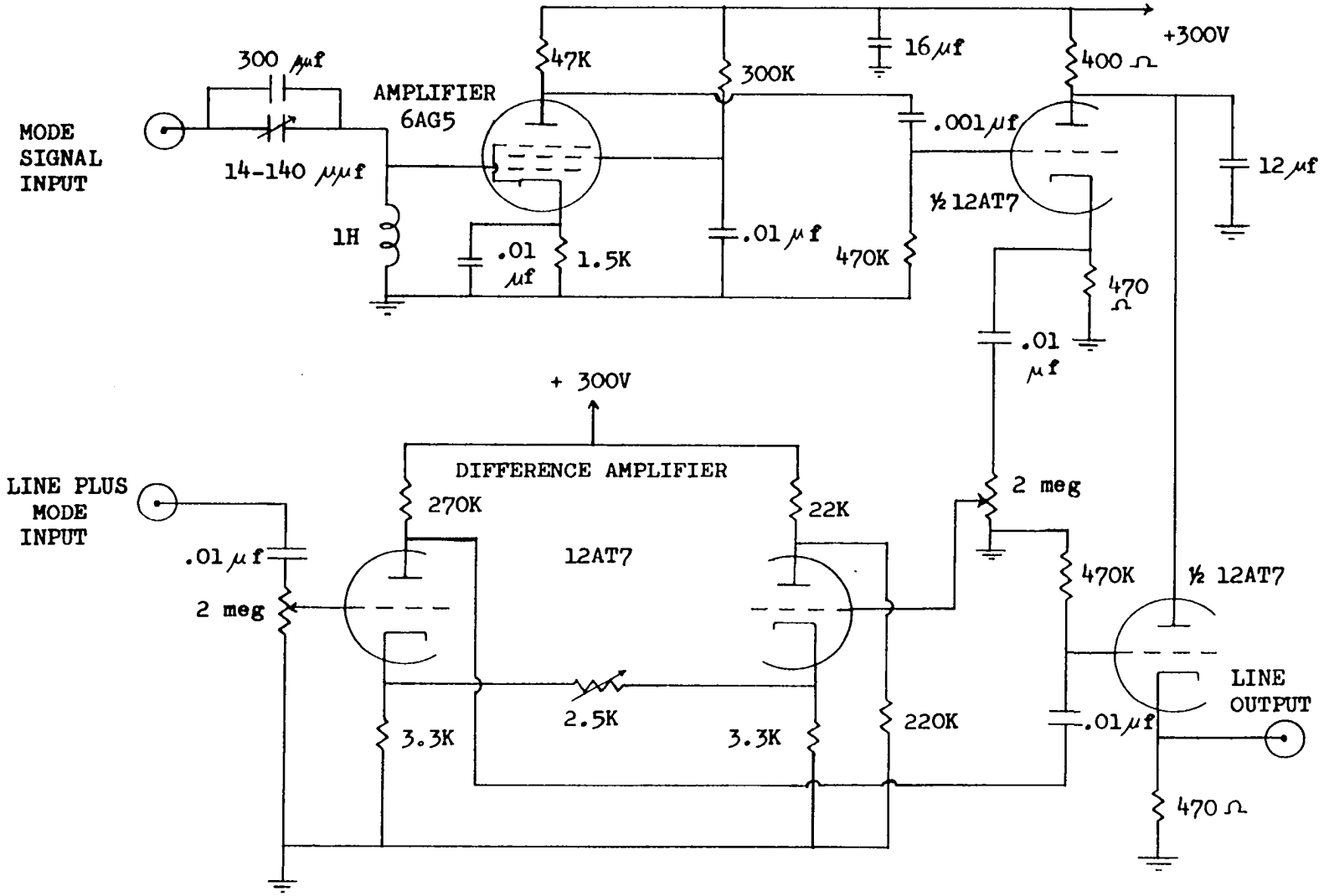

Figure 10.-Mode Compensator B

and the other 12AX7 is connected as two cathod followers. The mode input is connected to a crystal mounted in a section of waveguide before the absorption cell. After amplification by the 6AG5, and isolation by the 12AX7 cathode follower, the mode signal is fed to one grid of the 12AX7 difference amplifier. The other input to the difference amplifier comes from the preamplifier. The amplitudes of these signals may be matched by the two potentiometer controls in the grids of the difference amplifier. It will be recalled that the tuning method used both here and in the preamplifier is a series resonant circuit. Near resonance the phase of the voltage appearing across the inductor may be varied over a wide range by slight change of capacitance. This method is used to match the phases of the two signals for complete cancellation, whenever they are of equal amplitude. A second cathode follower is provided for low output impedance from the circuit.

Frequency Measuring System

Since only one of the frequency standards used was constructed locally, discussion of electronic detail will be emphasized in only that part of the frequency measuring system. The circuit is quite similar to other circuits developed for the purpose [28,29]. The circuit diagrams are shown in Figures 11, 12, 13, 14 and 15. The initial r-f signal is generated in a crystal oscillator at 5 mc.

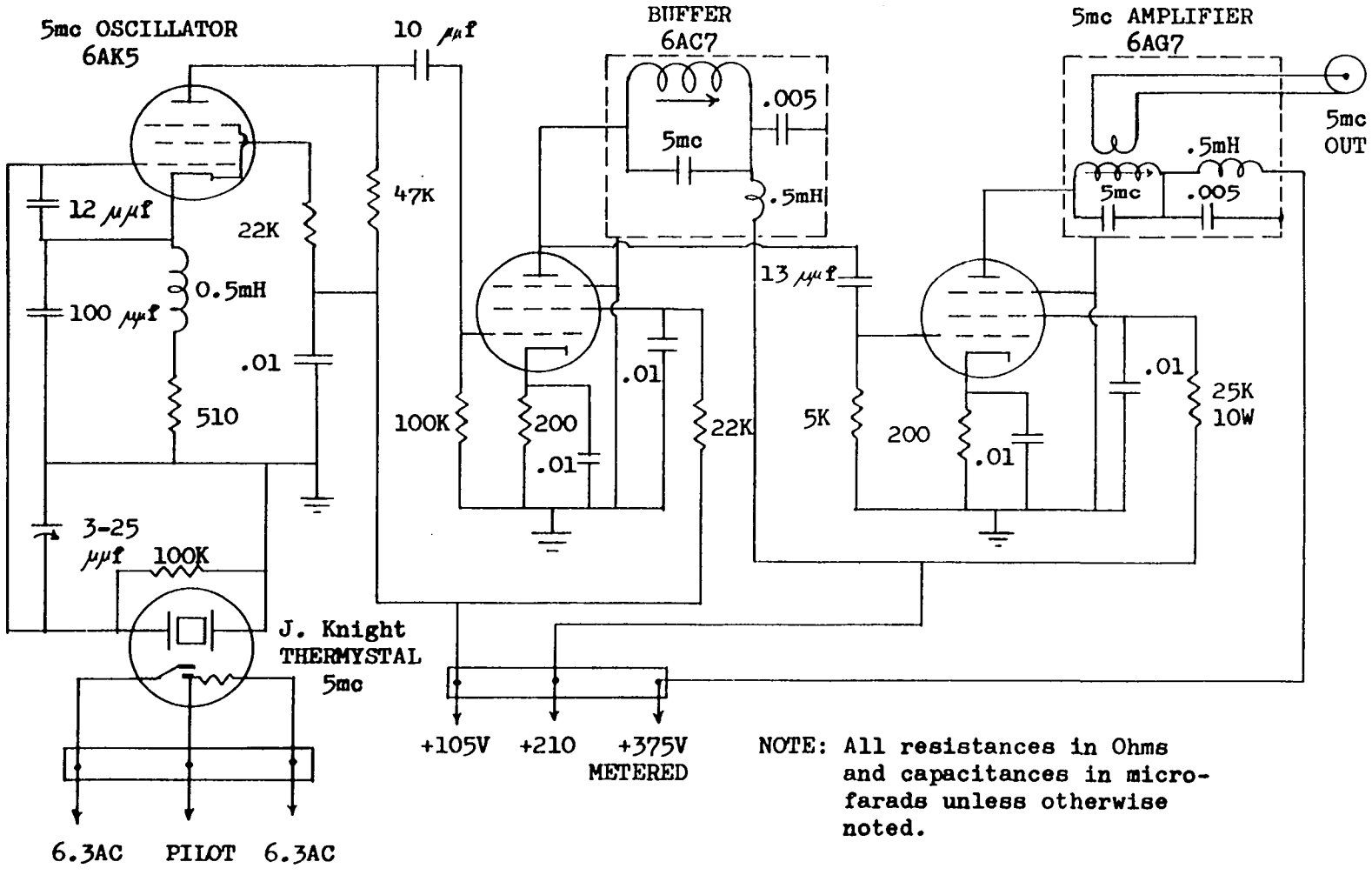

Figure 11.-Frequency Standard "A", 5mc Oscillator Unit

The crystal and thermostatically controlled oven were supplied as a unit from J. Knight Company. The oscillator circuit used is that recommended for use with this particular type of crystal. This oscillator operates at a rather low level and is very lightly loaded by the following stage. This light loading helps to prevent frequency instability from variations in the following circuit. For these reasons, the oscillator is followed by two r-f amplifiers to increase the available power before multiplication. Since each tuned circuit must be of very high Q to prevent amplification of undesired frequencies, each stage is loosely coupled to the next. The 5 mc output power from the second 5 mc amplifier is fed to a pair of 6AG7 tubes connected in a push-push doubler circuit, Figure 12. The resulting 10 mc power then drives a push-pull tripler circuit, again using 6AG7 tubes. Due to the very loose coupling mentioned above, the power available at 30 mc is insufficient to efficiently drive the 829B 30 to 90 mc tripler. An 829B tube is used to amplify the 30 mc power, Figure 10, to a level which is useful even with very loose coupling. Output is taken at this point, through a coaxial 'T' adaptor, to provide the 30 mc standard frequency. Very low value resistors (47 ohm) have been placed in series with the grids of both the 30 mc aplifier, and the 30-90 mc tripler. These resistors effectively eliminate a problem

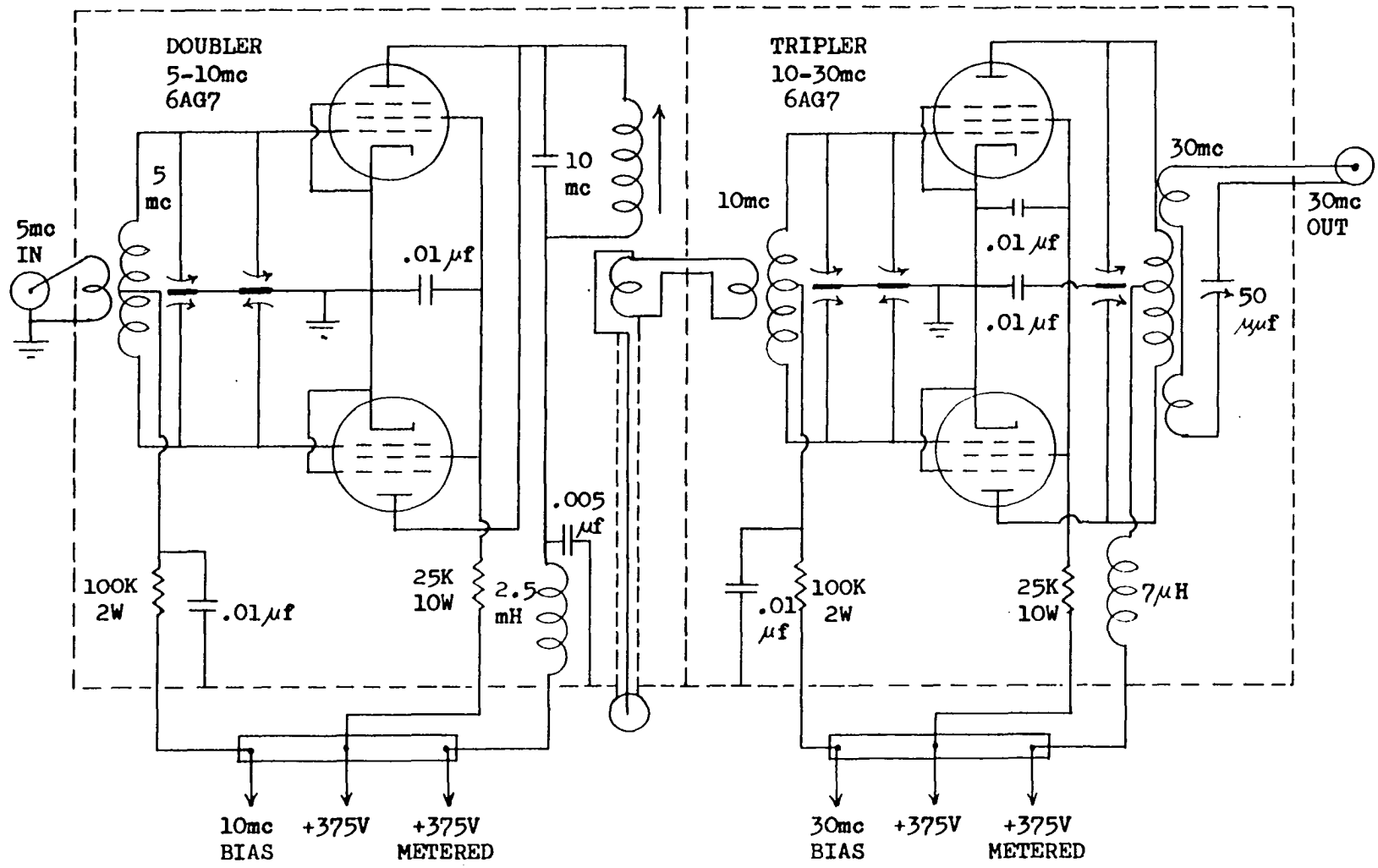

Figure 12.-Frequency Standard "A", 5-30mc Multiplier Unit

with parasitic oscillations. Beginning with the 30 mc amplifier, careful attention was paid to wiring geometry and orientation of inductances to prevent undesired coupling between circuits. A 6524 dual pentode is used for the 90 - 270 mc tripler. This tube has been especially designed for use at frequencies above 200 mc, and for service as a tripler. At 270 mc, it becomes difficult to use lumped-constant tuned circuits, hence a parallel-line shorted stub is used for tuning. A variable capacitor is used to vary the effective length of the line. This capacitor consists of two circular plates of about 1 inch diameter which can be moved toward or away from one another. The two halves of the tube may be balanced by adjusting the centering of this capacitor between the lines. Two coupling loops are provided from the stage. One loop connects to a balanced transmission line to the next stage. The other connects to a coaxial line, and is used to provide the 270 mc standard frequency. Again in order to insure that loose coupling can be used, an amplifier at 270 mc is provided, Figure 11. This also uses the type 6524, and both grid and plate circuits are tuned with parallel transmission lines, shorted at one end. Two outputs from this stage are also provided. One output supplies driving power for the next stage, and the other may be considered a "utility" output. Provisions have been made to operate a multiplier klystron, which will amplify the

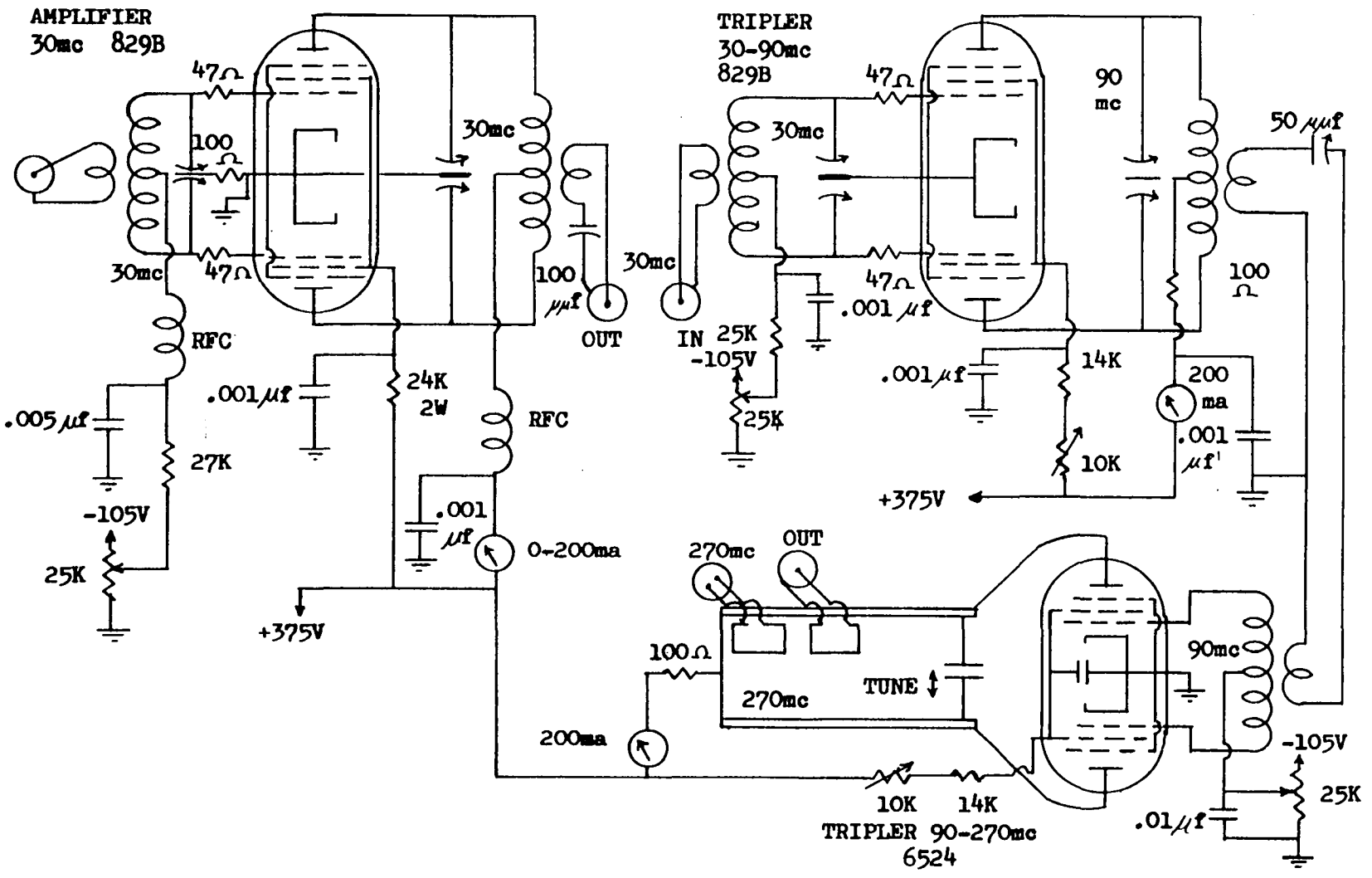

Figure 13.-Frequency Standard "A", 30-270mc Multiplier

9th, 10th, or 11th harmonic of 270 mc. This second 270 mc output may be used to drive the multiplier klystron for a 2700 mc standard frequency output. This higher standard frequency was unnecessary, however, at microwave frequencies up to 30 kmc.

The final stage in this frequency standard is the 2C43 tripler to 810 mc. The 2C43 is a planar electrode tube, sometimes referred to as a lighthouse tube. It operates in a grounded grid circuit, so that the grid may serve as an isolating shield between the cathode and plate circuits. The cathode is driven directly from the output coupling loop of the 270 mc amplifiers without extra tuning devices. In other words, the 2C43 cathode r-f circuit is part of the coupling loop. The plate of the 2C43 is tuned by a reentrant cavity [29]. This type of cavity is essentially a length of coaxial transmission line, shorted (for r-f) at the far end. It is resonant at that frequency for which it is a quarter-wave length long, the wave length in this case being the wave length in the cavity which depends upon the impedance of the coaxial line. The effective length of the cavity may be increased by the addition of a small capacitance at the open end. If the added capacitance is small, the cavity is also resonant at the odd harmonics of this frequency, which helps to make the output rich in harmonics. The maximum magnetic field is in the region

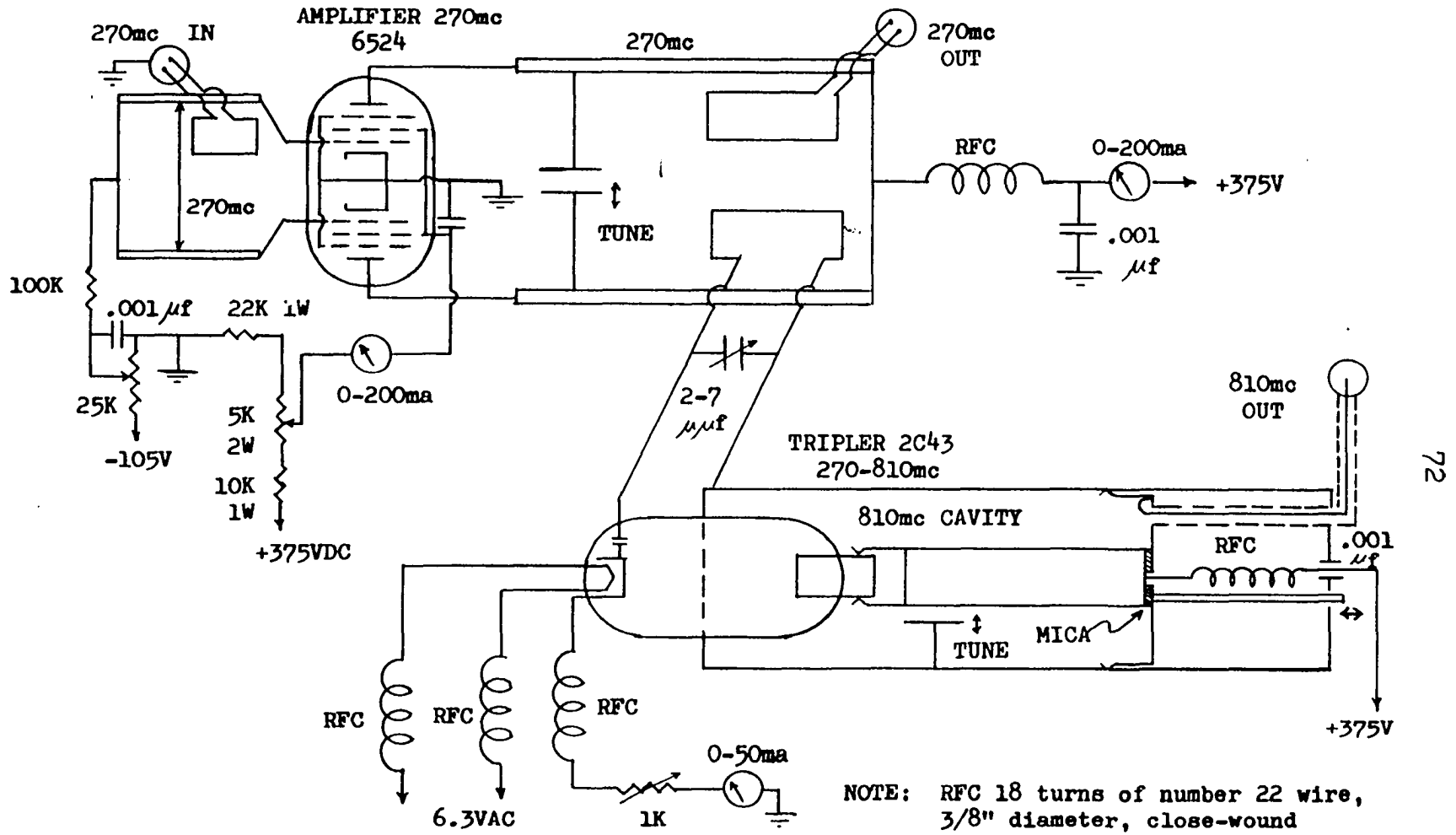

Figure 14.-Frequency Standard "A", 270-810 Tripler

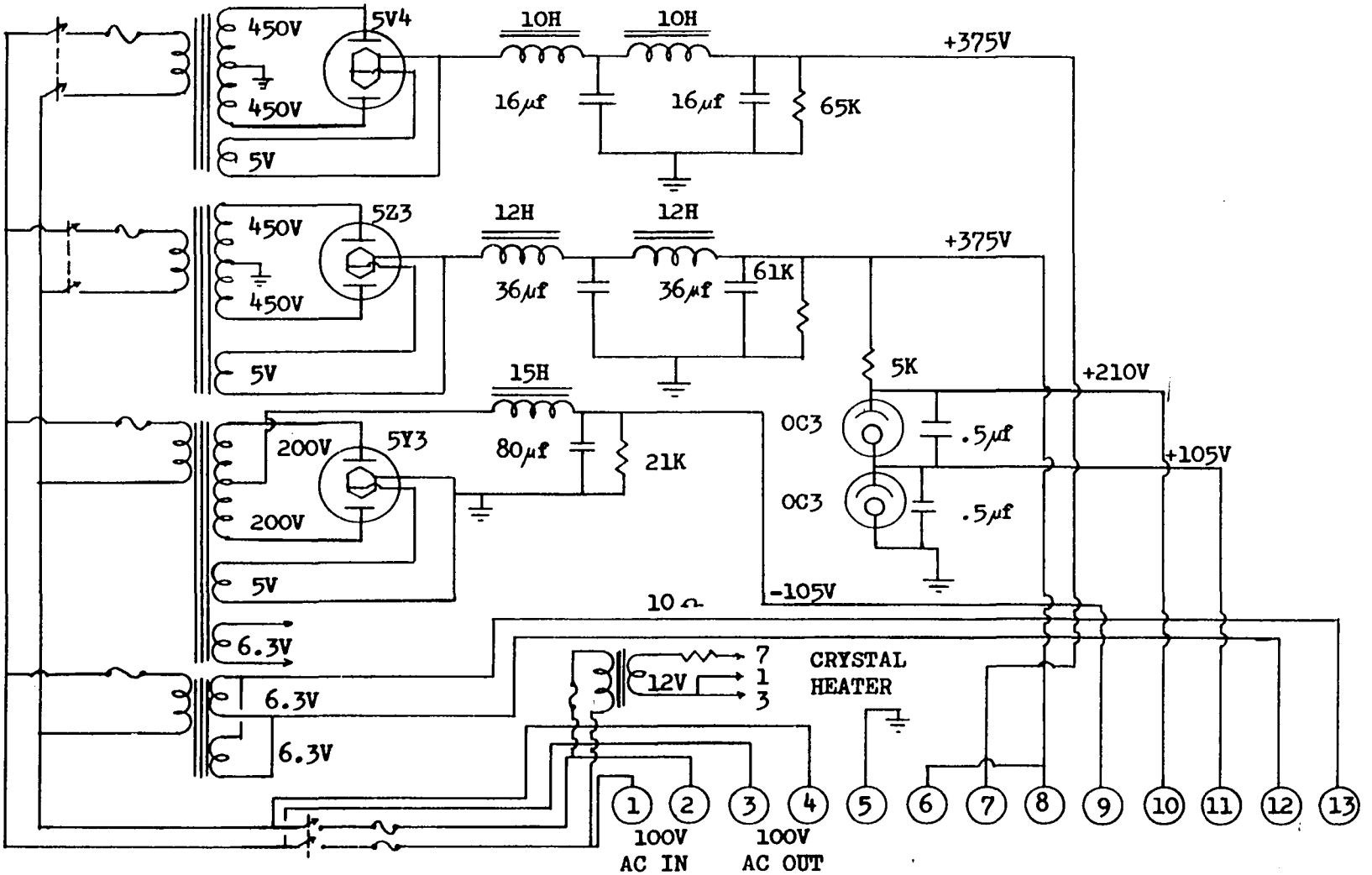

Figure 15.-Frequency Standard "A", Power Supply

near the shorted end of the coaxial line, and is in a circular direction, that is, perpendicular to both the axis of the line and the radial direction. Output is therefore taken, by a small loop, at this end. The loop is oriented for maximum coupling. This cavity was constructed of brass and silver plated brass, and most of the parts had their origin on the "surplus" market. Attempts were made to use a pair of lighthouse tubes in a push-pull circuit with parallel line tuning for this stage, but the maximum available output fell far short of that necessary to produce strong markers.

The power supply circuits are shown in Figure 14 for reference.

The second frequency standard has been discussed earlier. Only one part of that system need be discussed here. It was stated that the 100 KC standard frequency, used to stabilize the General Radio multipliers, is furnished from the Hewlett-Packard Model 524 Counter. This 100 KC signal is in the form of a pulse wave shape of about 1 volt peak amplitude. The form required by the General Radio Model 1112A is a sine wave of at least 5 volts amplitude. This is provided by a tuned amplifier similar to those used as intermediate amplifiers in radio receivers.

Interconnection diagrams for both frequency measuring systems are shown in Figures 3 and 4.

Waveguide System

Most of the parts of the waveguide system are commercial units. Those constructed in this laboratory are the mixer, a directional coupler for the upper "K" band and a detector for upper "K" band. The directional coupler is of the Bethe-hole type, and is discussed adequately in the literature. The upper "K" band detector is of the ridged waveguide type. A gently sloping ridge, of width 1/3 the wide dimension of the waveguide, is placed ahead of the crystal electrode and connected to the electrode. The ridge is isolated from the waveguide (for D.C.) by a .003 inch sheet of mylar plastic. The ridge provides a close impedance match over a broad range of frequencies. The crystal mount is designed for the 1N53 type microwave crystal. The directional coupler and detector are used with a Hewlett-Packard wavemeter for frequencies in the range of 26.5 - 33.5 KMC.

A sketch of the crystal mixer is shown in Figure 16. The essential details are the capacitance from the outer electrode to the waveguide and the fact that power may be applied to both ends of the crystal. To replace the 1N26 crystal, the unit must be disassembled. The

insulating material used is "Saran-Wrap". This must be wrapped around the outer electrode of the crystal before assembly. The unit may require assembly several times before the outer electrode is insulated from the waveguide. The adjustable plunger is the type used in the 2K33 family of klystrons.

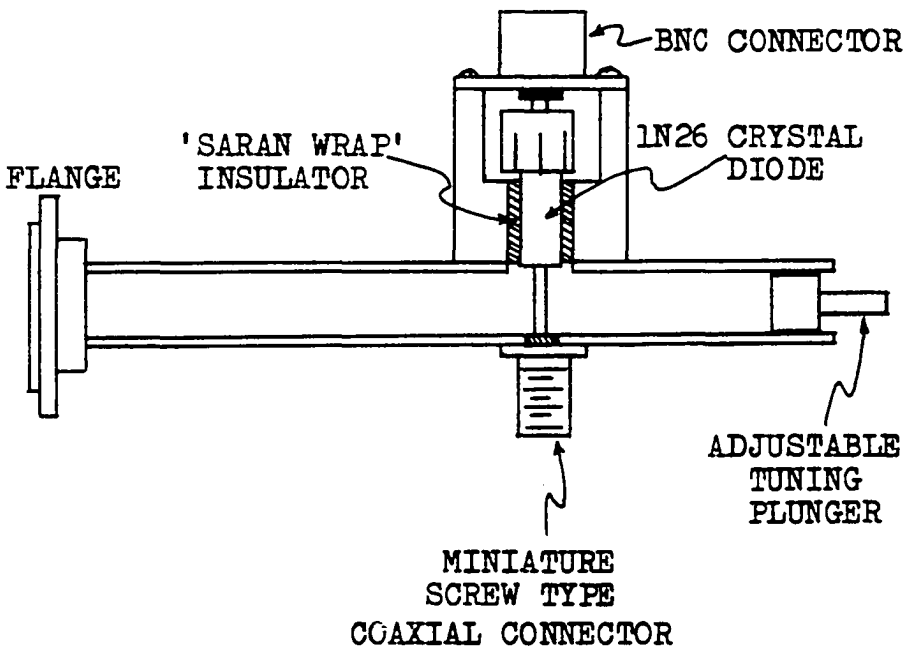

NOTE: Crosshatched areas are insulating material, all others are brass.

Figure 16.-Cross-Sectional View of Microwave Mixer (Not to Scale)

Operation

This section, concerning the operation and adjustment of the spectrograph, is included mainly for the benefit of those who may have occasion to use the spectrograph. The operation will be covered in the same order as in the previous sections.

When applying power to the spectrograph, the section previously called the microwave source is the only section requiring special care. The klystron heater must be energized at least one full minute before any other potentials are applied to the klystron. During this time all other components except the sweep generator, repeller and focus batteries, and the klystron beam supply, may be switched on. The klystron power supply low voltage switch may be turned on at this time. After filament warm-up, the repeller and the repeller voltage (with respect to beam voltage) should be observed on a high resistance meter. Test points are provided. Focus potentials should be applied during this period. This switch is inside the battery container, and care should be exercised since dangerous voltages are available. The focus electrode voltage should be at least -250 with respect to beam voltage. The repeller voltage should be raised to about -400 volts with respect to beam voltage, before

applying the beam voltage. This is very important, since neglect of this point may destroy an expensive klystron by allowing repeller current to flow. The 2K33 family of klystrons is constructed with a very fine tungsten wire located centrally in the repeller electrode. This wire modifies the repeller field in such a way as to prevent multiple passage of electrons through the resonant cavity. Repeller current melts this wire. The klystron then exhibits "Repeller Hysteresis", oscillating at one frequency for several nearby repeller potentials. The klystron is then unsuitable for microwave spectroscopy.

If the beam voltage control is set to 200 volts, the beam supply may now be switched on. A momentary drop in repeller voltage and an increase in "beam current" will be noted. The current registered by the beam current meter is the charging current for the 35μf capacitor in the sweep generator. The beam voltage control should now be increased slowly. At the same time one should be certain that the repeller voltage is never positive with respect to the beam voltage. This can usually be insured by keeping the apparent beam current below about 8ma. When the desired beam voltage is reached, about one minute should be allowed to fully charge the 35μf sweep coupling capacitor. The beam current can now be increased by reducing the negative bias on the focus electrode. This control is located on the

battery container, as is the repeller voltage control. Beam current should be kept below the manufacturers rating for the particular tube. About 30 minutes will be required for stabilization of beam current and klystron temperature. During this time, the sweep generator may be switched on and searching commenced. After warm up of about 30 seconds, it may be found necessary to switch the sweep slope direction control from positive to negative (or vice-versa) in order to start the sweep operation. For searching purposes, the sweep amplitude should be set to cover the width of the klystron mode. The sweep slope can be advanced to achieve about 5 or 10 sweeps per second to allow rapid searching. The 'search' position of the sweep control should be used.

Adjustment Procedures

To proceed with width measurements, one must first set the klystron frequency to the region of the desired line. This is most easily accomplished by following the frequency of the klystron with the cavity wave meter. First determine the klystron frequency with the wave meter, then, as the klystron is tuned, with the mechanical tuning adjustment, the cavity wave meter is made to coincide with the klystron every few hundred megacycles. Repeller electrode voltage must be varied from time to time to maintain oscillation. Some klystrons are equipped with knobs carrying

calibration marks. These may be conveniently used to preset the klystron frequency approximately. It will be found necessary to calibrate, occasionally, whatever klystron is being used.

Some 2K33 klystrons, especially those purchased through dealers in war surplus materials, may be found to oscillate much better at one end of the frequency range. In this case, the stop screws which limit the range of adjustment may be reset to change the frequency range of the klystron in that direction. This effectively converts the 2K33 to a QK463 or QK306, depending upon the direction of shift. One must be rather careful that the mechanical limit of the glass envelope is not reached. When the frequency of the klystron is adjusted to the vicinity of the line to be studied, the mode shape must be examined. In general, reflections and discontinuities will be found to exist. Several adjustments can be made to improve the mode pattern. The internal impedance of the klystron cavity may be matched to the waveguide by adjustment of the tuning plunger on the klystron. This plunger is located opposite to the waveguide coupling flange. The crystal detector mount should also be adjusted for maximum crystal current, or 'best' mode shape. Two adjustments are necessary on the crystal detector mount. After the plunger is adjusted, the crystal itself should be rotated in the mount and moved

in or out slightly. When searching for a line, it is usually advantageous to use a low pressure (less than 10^{-2}mm Hg) for a greater peak derivative signal. This will require also, a fairly low modulation amplitude, usually about 100 millivolts peak-to-peak.

While searching for a line, one has the choice of observing either the lock-in detector output or the output of the tuned amplifier. For strong lines, or when noise is a minor problem, the tuned amplifier output is preferable. If the preamplifier is tuned approximately, one may observe its output directly while adjusting the frequency of modulation for maximum output. The background may be used for observation. This will be found more convenient than attempting 'long range' fine adjustment of the amplifier. The Rhodes and Swartz amplifier may be varied by both the attenuator control and the feedback control. For minimum bandwidth, the feedback control should be advanced until oscillation takes place and then backed off until it ceases. If the feedback control is too close to the point of oscillation, an indication of 'beats' may be observed. The amplitude of the output will vary at a few cycles per second when this takes place. The feedback should be reduced until these 'beats' are not observed.

At this point, it may be found advantageous to reduce the microwave power incident upon the absorption cell. If too much power is used, the line will be

broadened by saturation. This will result in a reduction in the size of the peak derivative. Such a reduction can prevent observation of the line. Attenuation should be increased until the detector crystal current is below about 2.0μA.

It is assumed that the user is now observing the absorption line at the modulation frequency, that is, in the output of the tuned amplifier. If the lock-in detector has not been adjusted for the modulation frequency in use, it will be necessary to do so before the actual line derivative contour can be observed. An auxilliary oscilloscope, having both vertical and horizontal amplifiers calibrated, is necessary for this adjustment. Referring to Figure 9, connect test leads from test points 1 and 2 to the horizontal and vertical amplifiers of the oscilloscope. With both amplifiers set for about 0.1 volt/cm sensitivity, adjust P_1 and S_1 for a 90° phase difference at these two points. Control P_3 is used to equalize the amplitudes. Some interaction will be noted in these adjustments, so it will usually be necessary to iterate until the voltages are of equal amplitude and 90° out of phase. If the reference input amplitude is too large, distortion will cause a large deviation from circularity in the oscilloscope display. One of the oscilloscope test leads may now be moved

to TP_3, and the sensitivity of that channel reduced to about 10 volts/cm. Controls P_4 and P_5 should now be adjusted for a symmetric pattern on the oscilloscope.

The tuned amplifier output should now be connected to the signal input of the lock-in detector, and the signal output to one channel of the display oscilloscope. Using minimum filter capacitance, adjust the phase shift for maximum derivative signal on the display.

Adjustment of frequency marker amplitude will normally be found necessary after a large change in klystron frequency. Marker amplitude is affected by several adjustments. These are: power output at each of the standard frequencies, coaxial line length and tuning at the two higher frequencies, mixer tuning (effected by the plunger), the antenna tuning adjustment on the interpolation receiver, and mixer crystal d.c. load resistance. When using the General Radio standard frequency multipliers, the operator should make certain that the unit is locked into the 100kc standard frequency from the oscillator in the Hewlett-Packard counter. This can be determined from the meter indications as given in the manufacturers instruction manual. The coaxial line adjustments are best made by tuning for maximum current in the mixer crystal. The crystal load resistance should be

reduced to zero for maximum sensitivity. The remaining adjustments are straightforward. The procedure of actual width measurements will be covered in Chapter IV.

CHAPTER IV

EXPERIMENTAL PROCEDURE AND RESULTS

Two different sets of results are presented in this chapter. In the first section, the variation of apparent line width with several instrument parameters is examined. Pressure broadening measurements of several ammonia lines are contained in the second section. The interpretation of the experimental results in terms of collision theory and intermolecular forces is given in the last section.

Method and Instrument

The width measurements presented in this section were taken at room temperature (about 24°C, in most cases), and at pressures of from 10 to 50μ of Hg. Exact pressure readings were not recorded since the primary concern here is with instrumentation problems rather than particular line widths. The J=3, K=3, ammonia inversion line was used for these measurements.

During the warm-up time allowed to establish electronic stability of the instrument, gas was admitted to the vacuum system to the desired approximate pressure,

as determined by width measurements. Sufficient time was then allowed the vacuum system to attain pressure stability, again determined by width measurements. Usually 30 minutes to several hours was required, depending upon the recent history of the vacuum system.

In making the actual frequency measurements, a particular frequency marker is set to coincide with one peak of the absorption line, and the frequency to which the interpolation receiver is tuned is recorded. The marker is then moved to the other peak by tuning the interpolation receiver. This frequency reading is recorded, and the difference between the two frequencies is then the apparent line width. A series of such measurements is made without changing any settings of the instrument, and the variations noted. When electronic and pressure stability have been attained, such variations are usually well below 5kc.

The instrumental parameters, and the variation of apparent width with each are discussed as follows.

Klystron Power Level

The saturation effect has been discussed in Chapter II. As was pointed out, the power level at which saturation broadening begins to occur, depends upon the intensity of the particular line. The apparent widths of

two ammonia lines at different power levels have been examined. These were the J,K=3,3 and J,K=10,9 lines, with intensities of $\gamma=7.9 \times 10^{-4} cm.^{-1}$ and $\gamma=7.8 \times 10^{-5} cm.^{-1}$ respectively [8]. In making these measurements the 15 foot X-band absorption cell was used.

The microwave power is most conveniently determined by the direct current through the detector crystal. However, the current (at a given power level) varies greatly from one crystal to another, and depends also on the impedance of the dc microammeter used to measure the current. For these reasons, the crystal used for the measurements was calibrated, during the series of measurements, by a Hewlett-Packard Model 430C microwave power meter. In order to preclude any variation of width measurement due to nonlinearities in the electronic amplifiers, the microwave signal was attenuated, after the absorption cell and before the detector, to a constant level. Thus, the power level actually incident upon the gas could be varied independently. The attenuation was then reduced to zero after each width measurement, and the power reaching the crystal measured. For the 3,3 line, saturation began at a crystal current of 4 μamp which corresponded to about 20 μwatts power. The apparent width of the 10,9 line remained constant up to about 130 μwatts. When a seven foot K-band (1/4" x 1/2") cell was used, the

saturation effect for the 3,3 line became appreciable at a crystal current as low as 0.5 μamp (less than 4 μwatts). These measurements allowed the problem of saturation effect to be guarded against in all subsequent measurements.

Background or Klystron Mode Curvature

The two methods of mode compensation have been discussed in Chapter III. Both consist of methods of subtracting the background, or an approximation thereof, from the absorption line signal. It was found that a greater length of absorption cell aided in the reduction of this problem since it increases the total absorption intensity of the line while attenuating the klystron mode envelope power. For very long absorption cells, the usual length correction would be necessary [5]. This correction was found to be unnecessary in this case, however,

Careful adjustment of the klystron tuning parameters, particularly the beam current, were found to be quite helpful in reducing mode curvature. This in turn reduced the amount of compensation required, thus making the adjustment far less critical, especially for the stronger lines. In the most difficult cases, the gas was removed to a cold trap by freezing with liquid air, and the compensation adjusted for a baseline flat, over several line widths, to within a very few percent of the height of the line peaks. As an example of the effect of

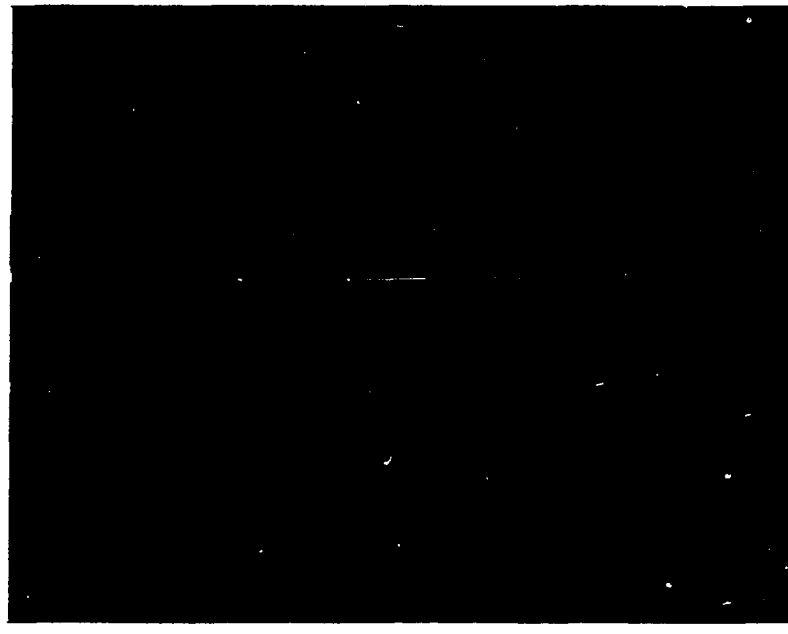

Figure 17.-Oscilloscope Photograph of the First Derivative of the Line Shape (With Markers)

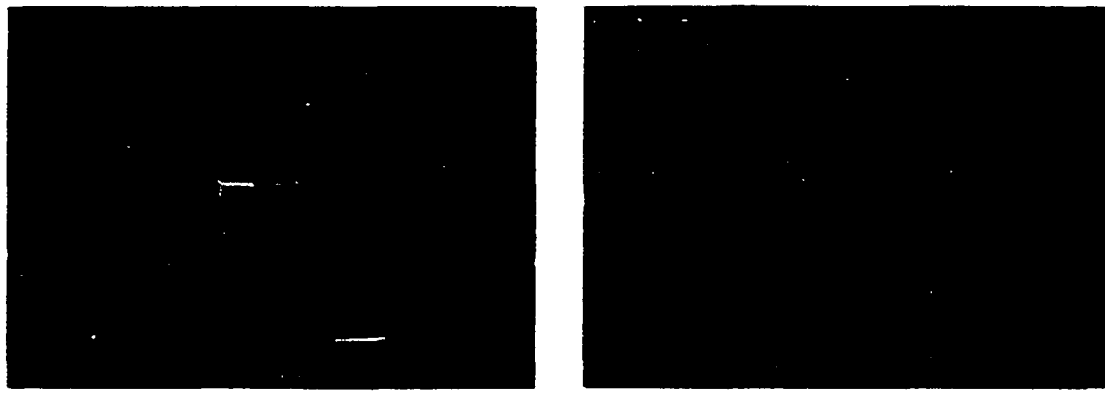

Figure 18.-Oscilloscope Photographs of the Second and Third Derivatives of the Line Shape

compensation, the above technique was used during width measurements of the J,K=5,4 line of ammonia (γ=2.2 x 10^{-4}cm.$^{-1}$). With no compensation, the mode derivative reached a height equal to the line derivative peak in a frequency of about one line width. At a pressure of 10 microns, the measured width, compensated, was 0.329Mc and uncompensated, 0.315Mc; a change of 5 percent. These methods of mode compensation may therefore be considered useful for at least the more intense lines.

Sweep Speed

The effect of sweep speed has been discussed in Chapter II. In summary, as the sweep speed is increased, the voltage output of the filter circuits in the phase detector cannot follow the absorption signal due to the long time constant of this filter. For each set of measurements on a particular line at a particular pressure, the sweep was reduced until such reduction no longer resulted in a reduction of apparent line width.

Amplitude of Source Modulation

When square wave source modulation is used, each marker pip splits into two with separation equal to the total frequency excursion of the klystron during one complete cycle (or $\omega'/2\pi$). This can be seen in Figure 17.

This provides a convenient measure of $\omega'/2\pi$, since the graph of $\omega'/2\pi$ vs square wave amplitude shows some minor variations from linearity.

In Chapter II, it was pointed out (from physical argument) that the amplitude of the line derivative signal should increase with a reduction in pressure. Examination of equation 7 of reference 22 shows that the signal should be inversely proportional to the pressure and proportional to the modulation amplitude. Such pressure variation has been noted and it was found to vary in the manner predicted until the line width was reduced to the same order of magnitude as the modulation amplitude.

The validity of the correction terms of equation (2.1) has been tested, and the results are shown in Table 1. The modulation frequency was 4kc, and the crystal current was 2.5 μamp. Under these conditions, the distortions due to saturation and to the frequency of modulation are negligible.

The calculated widths are based on the assumption that a small $\omega'/2\pi$ results in a negligible distortion. Columns 2 and 3 agree well with each other except for the last entry. Since $\omega'/2\pi$ is here considerably greater than $1/\tau$, one would expect the small amplitude approximation to no longer be valid.

TABLE 1

CALCULATED AND OBSERVED WIDTHS OF THE 3,3 AMMONIA LINE AT VARIOUS AMPLITUDES OF SQUARE WAVE SOURCE MODULATION

All frequencies in units of Mc/sec

$\nu/2\pi$ = 0.004 Mc/sec

$\omega'2\pi$	$(2\delta\nu)$obs.	$(2\delta\nu)$calc.
0.084	0.471	0.471
0.166	0.484	0.487
0.330	0.547	0.547
0.500	0.639	0.643
0.635	0.728	0.752

Frequency of Source Modulation

Variation of the apparent line width versus modulation frequency has been determined, and the results are in good agreement with equation (2.1). These results are shown in Table II.

TABLE II

CALCULATED AND OBSERVED WIDTHS OF THE 3,3 AMMONIA LINE AT VARIOUS FREQUENCIES OF SQUARE WAVE SOURCE MODULATION

All frequencies in units of Mc/sec

$\omega'/2\pi$ = 0.040 Mc/sec

$\nu'/2\pi$	$(2\delta\nu)$obs.	$(2\delta\nu)$calc.
0.010	0.473	0.473
0.050	0.479	0.480
0.065	0.491	0.485

Modulation frequencies as high as $0.1\delta\nu$ can be used without appreciable distortion. This allows an increase of modulation frequency for the weaker lines, thus reducing the crystal noise introduced into the amplifiers.

Sine Wave Source Modulation

A sine wave voltage has been used in place of the square wave to provide the source modulation. This type of modulation, which has been used in most of the previous work, is found to be less satisfactory. Each frequency marker splits into a band of closely spaced pips. The number of such pips and the width of the band are governed by the modulation index ω'/ν (see Chapter II Section 1 for the definitions of ω' and ν). When ν is greater than ω', only a few pips appear with the central one being the most intense [30] so that it can be used as a marker without much confusion. However, for large amplitude and slow modulation the marker pips form a continuous band which makes the width measurement more difficult and less reproducible. In this case the edge of the marker band may be used as a reference point. The angular frequency deviation ω' has been measured by noting marker separation for square wave modulation and determining the number of kilocycles deviation per millivolt. The amplitude of the sine wave in millivolts rms may then readily be converted to

units of kilocycles, center to peak. Apparent widths measured at various ω' and ν are given in Tables III and IV together with the values calculated by equation (2.2).

TABLE III

CALCULATED AND OBSERVED WIDTHS OF THE 3,3 AMMONIA LINE AT VARIOUS FREQUENCIES OF SINE WAVE SOURCE MODULATION

All frequencies in units of Mc/sec

$\nu/2\pi$	$(2\delta\nu)$obs.	$(2\delta\nu)$calc.
0.005	0.433	0.433
0.010	0.433	0.433
0.050	0.433	0.437
0.070	0.443	0.443
0.100	0.459	0.453
0.150 [a]	0.470	0.478

[a]Lock-in detector not used

TABLE IV

CALCULATED AND OBSERVED WIDTHS OF THE 3,3 AMMONIA LINE AT VARIOUS AMPLITUDES OF SINE WAVE MODULATION

All frequencies in units of Mc/sec

$\nu/2\pi$ = 0.005 Mc/sec

$\omega'/2\pi$	$(2\delta\nu)$obs.	$(2\pi\nu)$calc.
0.023	0.782	0.782
0.046	0.782	0.784
0.093	0.789	0.793
0.138	0.799	0.806
0.185	0.831	0.826
0.232	0.850	0.851

Modulation Frequency Harmonics

The detector output at the various harmonics of the modulation frequency has been examined. For square wave modulation, the second and third harmonic signals are found to have the same line derivative shape as the fundamental. The intensity at the third harmonic is approximately one sixth that of the fundamental while the second harmonic is much weaker. From the theory [22], the second harmonic should vanish. One may ascribe its presence to the non-linearity of the detector crystal.

When sine wave modulation is used, the output at the second and third harmonics is found to be proportional to the second and third derivatives, respectively, of the line shape, in accordance with the theory [22]. Photographs of these lines are shown in Figure 18. The use of the second harmonic presents a particularly interesting possibility of improved resolution of two nearby lines, since the central peak is considerably narrower than the original line.

Detector Non-Linearities

The phase detector has been checked for non-linear response by measuring the apparent line width at several levels of input signal. The measured width remained constant at signals up to 10 volts peak-to-peak,

but become larger at signals of 15 volts and higher. Although non-linear response of the detection system produces only second order effects, the signal level was kept within a small range to minimize such effects.

Line Width Parameters of Some Ammonia Lines

The widths of six ammonia lines have been measured at several pressures, using the techniques discussed in previous sections. The experimental procedure was as follows: During or after electronic stabilization of the apparatus, anhydrous ammonia was admitted to some pressure within the range of measurement (5 to 35μ Hg). The vacuum system was then allowed to achieve pressure stability, during which time the width was monitored. After a series of several width measurements differed only slightly from one another, the vacuum system was presumed to have reached a stable pressure. Also during this time, sweep speed, detector crystal current, and input level to the phase detector were checked so as to introduce no spurious broadening effect. Mode compensation, when required, was adjusted at this point. In all measurements, square wave modulation of 8 kc was used. Widths of the particular line were then measured using the method previously discussed. Normally, three separate determinations of the width were made unless the deviations between measurements were as much as 5 kc. The usual deviations were, however, much less and for the

stronger lines often remained less than 1 kc. When the operator was satisfied with the particular series of measurements, the mercury level of the McLeod gauge was immediately raised to the seal-off point. While the mercury was rising in the gauge, the value of $\omega'/2\pi$ was determined by setting first one, and then the other of the split marker pair to a single peak of the line derivative.

A vernier cathetometer was used to measure the heights of the mercury column in the McLeod gauge. This instrument reads directly to .1mm, and an estimate of 0 or 5 was made in the following figure. The heights of the mercury in the open and closed tubes were recorded as h_o and h, respectively. After the pressure was read and recorded, the pressure in the vacuum system was changed, by either pumping or admitting gas or both, and the above steps repeated. For most lines, four points of the width vs pressure variation were recorded. For two lines, the 4,3 and 4,4 more points were determined in order to resolve some doubt. The data for the 6,6 line is shown in Table V. Similar data for the other lines may be found in Appendix I. Each Δ, the apparent width, is the average of three or more measurements. The half-width, $\delta\nu/2$, is determined by Δ and $\omega'/2\pi$ and the use of equation [2.1]. The pressure is determined by $p = 1.5559\ h_o h \times 10^{-6}$ mm Hg.

TABLE V

LINE WIDTH AND PRESSURE DATA
FOR THE J,K = 6,6 AMMONIA LINE

Δ mc	$\omega'/2\pi$ mc	$\delta\nu/2$ mc	h_o mm	h mm	p μHg
.899	.150	.773	128.1_0	130.1_0	25.95
.798	.154	.685	121.5_5	121.8_5	23.00
.602	.164	.513	102.9_5^0	103.1_5^0	16.50
.467	.160	.392	87.0_0^0	87.5_0^0	11.85

The line width parameters, in mc/mm, were then found from the slope of the graph determined by the width and pressure data. The least-squares method of fitting was used for all lines. A typical graph of $\delta\nu/2$ vs p is shown in Figure 19.

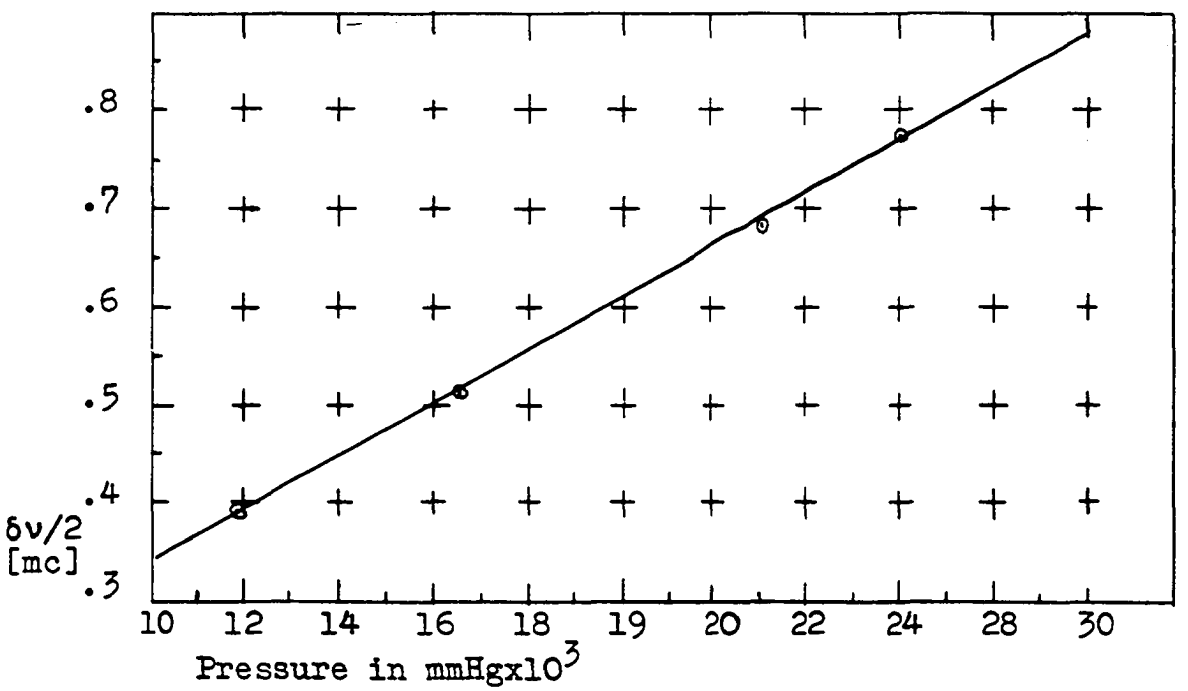

Figure 19.-Line Width vs Pressure for the 6,6 Line of the Inversion Spectrum of Ammonia

Table VI shows the line width parameters determined in this work, along with the previous measurements of Bleaney and Penrose [17]. The calculated widths have been determined by fitting exactly the J,K = 4,4 line. The discrepancy of the present data with the results of Bleaney and Penrose is well within the experimental errors of the measurements by these authors.

TABLE VI

LINE WIDTH PARAMETERS IN UNITS OF mc/mm Hg

J,K	Measured Widths		Calculated Widths	
	This Work	Bleaney and Penrose	Bleaney and Penrose	Anderson(No Rotational Resonance)
3,3	26.5	27	26.0	25.6
4,4	26.5	27	26.5	26.5
5,5		28	26.9	27.1
6,6	26.9	28	27.1	27.4
7,7	24.9		27.3	27.7
3,2		19	19.8	17.1
4,3	19.9		21.9	19.8
5,4	23.3		23.2	21.7
7,6		23	24.6	23.7

Ammonia Line Widths and Collision Broadening Effects

It has been known for many years that the cause of pressure broadening of spectral lines at low pressure may be ascribed to the collisions between molecules. Classically, one may think of an isolated ammonia molecule as

emitting a wave train of frequency ν, in the centimeter region, with a life-time of the order of several days. However, a collision of this "emitter" with another molecule results in a complete interruption of the continuous wave train. The emitted radiation now consists of pulses of waves of frequency ν, lasting over a duration of τ, which is approximately equal to the time interval between two successive collisions. By means of Fourier analysis it can be shown that a "broken" wave of this type is equivalent to a superposition of a large number of "continuous" waves with major frequency components varying approximately from $\nu-1/\tau$ to $\nu+1/\tau$. The emitted radiation from the ammonia may be thought of as having frequencies extending over a $\Delta\nu$ of about $2/\tau$ centered at ν. The width of the spectral line therefore depends upon $1/\tau$, which increases with the pressure.

A quantum-mechanical description of the collision effect may be given in a similar manner. As the colliding molecule (known as the perturber) approaches the emitter, the pattern of the energy levels of the latter is greatly varied, which corresponds to a change of phase of the emitted wave. Also, the collision might induce a transition from the energy state of the emitter, and this is analogous to the interruption of the wave train which was described in the preceeding paragraph. Of course,

here the term collision is not very clearly defined. For this purpose a collision will be spoken of whenever the distance of closest approach between two molecules is of such magnitude that their interaction produces an appreciable phase shift, or induced transition probability. The line width is governed by the frequency of collisions, and thus by the collision diameter, which in turn depends quite sensitively upon the magnitude and the nature of the intermolecular force. It is for this reason that the line width studies may serve as a powerful tool for investigating intermolecular interactions.

In 1948, Bleaney and Penrose [16] offered a somewhat over-simplified yet revealing theory to explain the variation of the widths of the ammonia inversion lines versus the rotational quantum numbers J and K. They assume that a collision occurs when two molecules approach to a distance such that the energy of interaction between them reaches a certain value W. If the interaction is of the dipole-dipole type, this collision radius r_0, is then determined by

$$W \propto \frac{\bar{\mu}_e \bar{\mu}_p}{r_0^3} \quad , \qquad (4.1)$$

where $\bar{\mu}_e$ and $\bar{\mu}_p$ are the average dipole moments of the emitter and perturber respectively. For a molecule in the rotational state (J,K), $\bar{\mu}_e$ is related to the actual dipole

moment μ_e through the relation

$$\mu_e = \mu \frac{K}{\sqrt{J(J+1)}} \qquad (4.2)$$

A similar expression can be given for μ_p. Since the observed line width is contributed by perturbers in all rotational states, the quantity $\bar{\mu}_p$ will no longer depend on the rotational quantum members after averaging over K and J for the perturber (but not the emitter). The collision cross-section, and thus the line width, should vary with r_0^2 of

$$\Delta\nu \propto r_0^2 \propto (\bar{\mu}_e)^{2/3} \propto \left[\frac{K}{J(J+1)}\right]^{1/3} \qquad (4.3)$$

This equation agrees reasonably well, within the limit of experimental accuracy, with the measurements of ammonia line widths made by Bleaney and Penrose.

Subsequently, Anderson has given a more rigorous quantum-mechanical theory of pressure broadening of microwave spectral lines. The result of his treatment, for the case of the ammonia inversion lines, is that the width may be written as

$$\Delta\nu = (\text{const.}) \frac{K}{\sqrt{J(J+1)}} + (\Delta\nu)_{r.r} \qquad (4.4)$$

The first term bears some resemblance to the right-hand side of equation (4.2). The second term, $(\Delta\nu)_{r.r}$, arises from the effect of rotational resonance and is shown to be

$$(\Delta\nu)_{r.r} \propto \sqrt{J^2-K^2} \qquad (4.5)$$

Two molecules in rotational resonance may be considered, classically, to be rotating at the same rate, so that the dipole moments are always correlated. The component of μ_e perpendicular to $\bar{\mu}_e$ should also be included in the calculation of interaction energy. It should be noted that for J=K, $(\Delta\nu)_{r.r}$ becomes zero.

Anderson's theory accounts well for the relative intensity of the ammonia lines at various rotational states. In the absence of rotational resonance (J=K), Anderson's theory gives

$$\Delta\nu \propto \left[\frac{K^2}{J(J+1)}\right]^{1/2} \qquad (4.6)$$

instead of an exponent of 1/3 as equation (4.3). However, due to the limited accuracy of the earlier measurements, no definite conclusion can be made as to which one of the two theoretical expressions agrees better with experiment.

With the more accurate data from this work, it is possible to perform a more critical test of the theory. While the subject of the quantum-mechanical treatment of line broadening is beyond the scope of the present work, it is hoped that this investigation might shed some light on the general theory of pressure broadening and possibly suggest certain directions for further theoretical work. In order to eliminate the effect of rotational resonance, the primary concentration here will be on the lines with J=K.

The theoretical values of the widths calculated by Bleaney and Penrose's formula and by Anderson's formula, without rotational resonance, are given in Table VI. The constants of proportionality in (4.3) and in (4.6) are determined from the width of the (4,4) line. It is seen that neither set of the calculated values fits the experimental data very well. Particularly, the (7,7) line is considerably narrower than the (3,3) line while both theories predict otherwise. Also, results for the (4,3) and (5,4) lines are not completely satisfactory although the theoretical widths (Anderson's method) may be raised somewhat by including the rotational resonance.

Naturally, it should be interesting to ascertain the reason for such discrepancy between theory and experiment. Since both equations (4.3) and (4.6) are derived under the assumption that the intermolecular force is of the dipole-dipole type, interactions involving higher multipoles (such as quadrupole-dipole or quadrupole-guadrupole) may very well be responsible for the deviations in Table VI. The method of multipole expansion becomes invalid at small distances, so the higher terms may contribute significantly to the line widths. As a suggestion for future work, it might be desirable to determine theoretically the J,K dependence of the line

widths due to a combination of some of these higher multipole effects and try to fit the experimental data of the family of lines with J=K.

Part of the "errors" of the theoretical widths in Table VI may be ascribed to some of the approximation procedures employed in Anderson's treatment. However, it is rather unlikely that this could be the entire source of trouble. Since $\mu_e K[J(J+1)]^{-1/2}$ represents the average dipole moment along the axis of total angular momentum for a rotating ammonia molecule, one might expect, from an intuitive viewpoint, that the line width should be proportional to some power of $K^2/[J(J+1)]$ if the intermolecular force consists of only dipole-dipole interaction. Indeed, Margenau has obtained

$$\Delta\nu \propto \frac{K}{\sqrt{J(J+1)}} \qquad (4.7)$$

by means of statistical theory [13]. On this basis it would be difficult to account for the anomalous width of the (7,7) line.

Summary

A critical examination has been made of the instrumental effects expected to produce spurious broadening of measured microwave line widths. The design, construction, and operation of a microwave spectrograph, to examine these effects, has been described. The most

noteable of these effects is the modulation broadening, and a correction formula for this effect has been experimentally verified. It has been found also, that the harmonic frequencies of the modulation frequency (for sine wave modulation) follow an envelope which is proportional to the corresponding degree of differentiation of the absorption line shape.

Two methods of compensating for the mode curvature derivative have been described. The methods are suitable for fairly strong lines when the amount of compensation required is small. For the weaker lines, however, the mode curvature signal is strong enough to mask the line. In this case, increasing the gain of the amplifier chain merely saturates the amplifiers before the line signal can be seen. This will be discussed in the following chapter.

Widths of several lines of ammonia have been measured, and the resulting widths, although following a similar general variation of previous work, are smaller. This is to be expected in view of the instrumental broadening effects discussed in Chapter II.

The measured widths of the series of lines with J=K show appreciable deviation from the results of Anderson's theory and also the theory of Bleaney and Penrose. It is suggested that the discrepancy is due to the interaction of the higher electric multipole of the ammonia molecules.

CHAPTER V

METHOD OF TRIPLE MODULATION

In the previous chapters, mention has been made several times of the problem of the mode derivative signal. As was shown, one may compensate for this spurious signal by the process of subtracting it out with an outside signal which closely approximates the shape of the mode derivative. This method has been used successfully for the stronger lines. For weak lines, two objections remain. These are: (1) the obvious distortion when the mode derivative signal is much larger than the absorption signal, and (2) the loss in sensitivity due to the masking effect of the mode derivative. The second of these problems arises when one attempts to increase the gain of the amplifier system to achieve the theoretically ultimate sensitivity as determined by the crystal noise level. Long before this point is reached, however, the amplifiers become saturated. In this chapter a method shall be described which has been used successfully to eliminate this mode derivative signal before arrival of the total

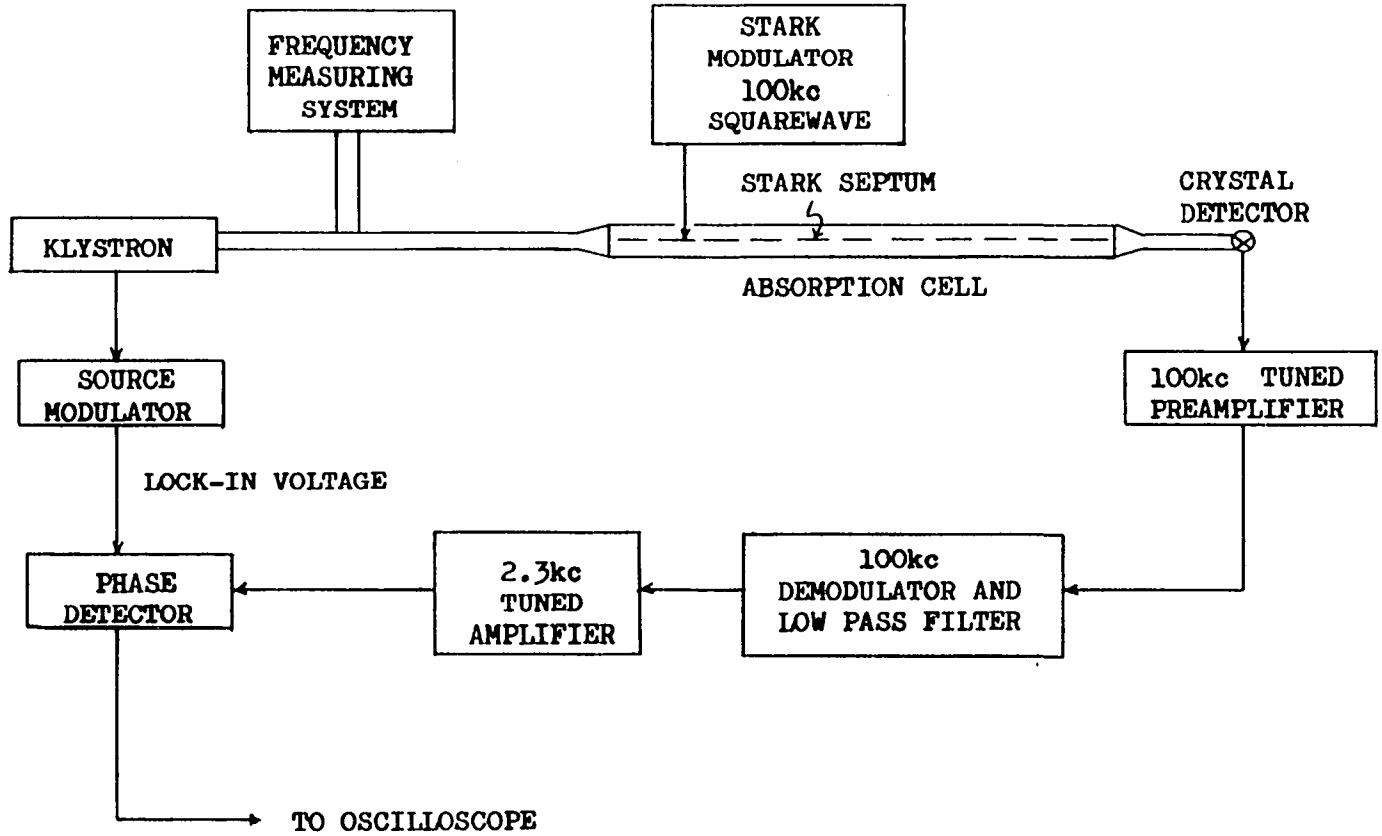

Figure 20.-Simplified Block Diagram of Triple-Modulation Spectrograph

signal at the microwave detector. This method employs two rf modulations in addition to the slow sawtooth sweep and is therefore called the method of triple modulation.

In addition to the low frequency source modulation, a square wave voltage of 100 kc/sec and several hundred volts is applied to the central septum of the absorption cell to produce stark modulation [34,8]. The 100 kc output of the microwave detector is amplified and demodulated. A low pass filter then removes the 100 kc component of the signal, but leaves the source modulation frequency (2.3 kc), which is detected by the lock-in detector. Since only resonant absorption by the gas can give rise to a 100 kc signal, the mode envelope, or its derivative, will not appear at the microwave detector. This eliminates completely the second of the objections listed above. The first objection, that of distortion, has also been eliminated but has been replaced by another instrumental broadening effect, the distortion of high frequency, high amplitude, modulation. This is fortunate, since the mode distortion cannot be accurately predicted or accounted for, whereas a modulation effect correction term has been reported and can easily be applied to this case [21]. An unpredictable distortion has again been replaced by a predictable effect.

A simplified block diagram of this triple modulation scheme is shown in Figure 20. The stark modulator is a conventional high voltage square wave generator used in stark modulation spectrographs [28]. The 100 kc preamplifier is a conventional tuned pentode stage with a cathode follower output stage. A low noise tuned input stage, similar to that discussed in Chapter III, is used. The 100 kc demodulator is a conventional crystal diode with an L-C low pass filter. The remainder has been discussed.

Figure 21 shows an oscilloscope photograph of the ammonia 4,4 inversion line observed by this technique, and one using source modulation only. The poor mode contour shown has been intentionally selected in order to demonstrate the effectiveness of the method. The base line is found to remain flat up to a source modulation amplitude as high as 1 volt, which corresponds to $\omega'/2\pi = 4$ mc.

Since the stark modulation serves merely to provide a carrier for the low frequency absorption signal, the intensity of the dispersion shape line is still inversely proportional to pressure. This fact suggests that one may obtain the sensitivity, limited only by crystal noise, of the stark spectrograph, along with the resolution of the source modulation derivative spectrograph. One may reduce the pressure to produce narrow lines, and at the same time increase their (peak) intensity. The resolution can be further improved by

displaying the second derivative of the line shape. For the best resolution, the stark modulation frequency must be kept small compared with the line width to prevent the stark modulation broadening discussed by Karplus [21].

The method of triple modulation, in view of its increased complexity, is intended as a supplementary technique for the weaker lines. For the strongest lines ($\gamma > 2 \times 10^{-4}$ cm.$^{-1}$), the double modulation method with no compensation is suitable with careful tuning and adjustment. In the range of $2 \times 10^{-4} > \gamma > 10^{-5}$ cm.$^{-1}$, mode compensation must be used with the double modulation method. For $\gamma < 10^{-5}$ cm.$^{-1}$, it will usually be necessary to resort to the triple modulation method, in spite of the increased number and complexity of instruments used.



(a) With Source Modulation Only

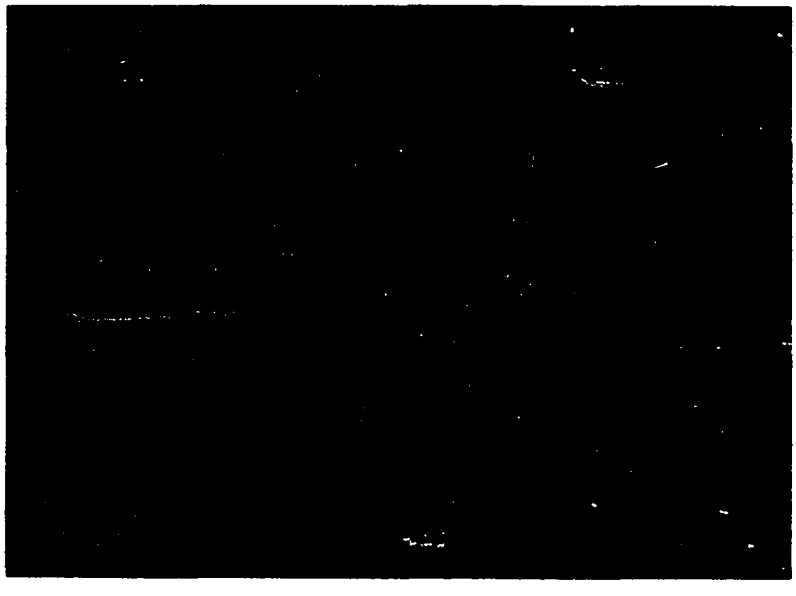

(b) With Triple Modulation

Figure 21.-Oscilloscope Photograph of the (4,4) Line of Ammonia

APPENDIX I

LINE WIDTH AND PRESSURE DATA

3,3 line

Δ mc	$\omega'/2\pi$ mc	$\delta\nu/2$ mc	h_o mm	h mm	p μHg
.954	.186	.819	130.7_o	131.2_o	26.68
.630	.185	.533	101.5_o	101.9_o	16.09
.568	.185	.480	93.5_o	93.5_o	13.60
.357	.078	.306	69.3_o	69.2_o	7.46

$\Delta\delta\nu/2\Delta p = 26.5$ mc/mm

4,4 line

Δ mc	$\omega'/2\pi$ mc	$\delta\nu/2$ mm	h_o mm	h mm	p μHg
.758	.107	.653	119.4_o	119.5_o	22.21
.600	.126	.513	103.4_o	103.7_o	16.69
.507	.182	.425	91.4_o	91.9_o	13.05
.399	.121	.338	84.5_o	83.4_o	10.95
.396	.073	.340	78.5_o	78.4_o	9.57
.393	.082	.337	82.1_5	82.2_o	10.50
.372	.068	.319	79.6_o	79.8_o	9.89
.300	.110	.251	65.9_o	67.6_o	6.93

$\Delta\delta\nu/2\Delta p = 26.5$ mc/mm

7,7 line

Δ mc	ω'/2π mc	δν/2 mc	h_o mm	h mm	p μHg
.892	.179	.765	136.7_0	135.0_0	28.71
.744	.179	.635	123.4_0	121.7_5	23.37
.683	.180	.582	117.8_0	116.2_0	21.30
.589	.173	.592	106.6_5	106.9_0	17.74

$\Delta\delta\nu/2\Delta p$ = 24.9 mc/mm

4,3 line

Δ mc	ω'/2π mc	δν/2 mm	h_o mm	h mm	p μHg
.831	.135	.715	134.6_0	133.6_0	27.95
.514	.127	.439	103.3_5	103.4_0	16.62
.386	.108	.328	83.5_5	83.5_5	10.85
.442	.105	.378	94.6_5	91.8_5	13.51
.852	.197	.725	142.3_5	141.5_5	31.4
.830	.253	.697	138.7_5	139.0_5	30.08
.870	.108	.750	144.4_0	144.4_0	32.45

$\Delta\delta\nu/2\Delta p$ = 19.9 mc/mm

5,4 line

Δ mc	ω'/2π mc	δν/2 mc	h_o mm	h mm	p μHg
.532	.130	.454	106.3_0	107.9_5	17.85
.798	.187	.682	131.9_5	131.8_5	27.00
.459	.100	.394	98.1_0	97.5_0	14.89
.329	.119	.278	78.7_0	78.4_5	9.60

$\Delta\delta\nu/2\Delta p$ = 23.3 mc/mm

LIST OF REFERENCES

1. B. Bleaney, and R. P. Penrose, Proc. Phys. Soc. 59, 418 (1947).
2. C. H. Townes, Phys. Rev. 70, 109A, 665 (1946).
3. R. R. Howard, and W. V. Smith, Phys. Rev. 77, 840L.
4. H. Feeny, H. Lackner, P. Moser, and W. V. Smith, J. Chem. Phys. 22, 79 (1954).
5. R. S. Anderson, Phys. Rev. 97, 1654 (1955).
6. C. A. Potter, A. V. Bushkovitch, and A. G. Rouse, Phys. Rev. 83, 987 (1951).
7. L. I. Schiff, Quantum Mechanics (McGraw-Hill Book Co., Inc., New York, 1955).
8. C. H. Townes, A. L. Schawlow, Microwave Spectroscopy (McGraw-Hill Book Co., Inc., New York, 1955).
9. R. Karplus and J. Schwinger, Phys. Rev. 73, 1020 (1948).
10. H. S. Snyder, and P. I. Richards, Phys. Rev. 73, 1178 (1948).
11. P. W. Anderson, Phys. Rev. 76, 647, 471A (1949).
12. J. H. VanVleck and V. F. Weisskopf, Rev. Mod. Phys. 17, 227 (1945).
13. H. Margenau, Phys. Rev. 76, 121, 585A (1949).
14. H. Margenau, Phys. Rev. 82, 156 (1951).
15. D. C. M. Leslie, Phil. Mag. 42, 37 (1951).
16. B. Bleaney and R. P. Penrose, Proc. Phys. Soc. 60, 83 (1948).

17. B. Bleaney and R. P. Penrose, Proc. Roy. Soc. 189, 358 (1947).

18. W. E. Good, Phys. Rev. 70, 109A, 213 (1946).

19. W. Gordy and M. Kessler, Phys. Rev. 72, 644L (1947).

20. R. J. Watts and D. Williams, Phys. Rev. 72, 644L (1947).

21. R. Karplus, Phys. Rev. 73, 1027 (1948).

22. E. A. Rinehart, R. H. Kleen, and C. C. Lin, Journ. Mol. Spect. 5, 458 (1960).

23. R. R. Howard and W. V. Smith, Phys. Rev. 79, 128 (1950).

24. C. M. Johnson and D. M. Slager, Phys. Rev. 87, 677 (1952).

25. W. Gordy, W. V. Smith, and R. F. Trambarulo, Microwave Spectroscopy (John Wiley and Sons, Inc., New York, 1953).

26. H. M. Paynter (Editor), A Palimpsest on the Electronic Analog Art (Geo. A. Philbrick Researchers, Inc., Boston, 1955).

27. R. H. Kleen, Master's Thesis, Univ. of Okla., (1960).

28. L. C. Hedrick, Rev. Sci. Instr. 24, 565 (1953).

29. D. R. Hamilton, J. K. Knipp, and J. B. H. Kuper, Klystrons and Microwave Triodes, MIT Radiation Laboratory Series, Vol 7 (McGraw-Hill Book Co., Inc., New York, 1948).

30. F. E. Terman, Radio Engineers Handbook (McGraw-Hill Book Co., Inc., New York, 1943).

31. P. Rosenberg, Rev. Sci. Instr. 10, 131 (1939).

32. G. E. Valley, and H. Wallman, Vacuum Tube Amplifiers, MIT Radiation Laboratory Series, Vol 18 (McGraw-Hill Book Co., Inc., New York, 1948).

33. A. B. VanRennes, Nucleonics 10 No. 7, 20 (1952).

34. K. B. McAfee, Jr., Rev. Sci. Instr. 20, 821 (1949).