UNIVERSITY OF OKLAHOMA

GRADUATE COLLEGE

THE DESIGN AND DEVELOPMENT OF A 3D PRINTER COMPATIBLE BIOREACTOR FOR TENDON TISSUE ENGINEERING

A THESIS

SUBMITTED TO THE GRADUATE FACULTY

in partial fulfillment of the requirements for the

Degree of

MASTER OF SCIENCE

By

ZACHARY RAY MUSSETT
Norman, Oklahoma
2016

Downloaded from SHAREOK. Persistent Handle URL: https://hdl.handle.net/11244/47093

THE DESIGN AND DEVELOPMENT OF A 3D PRINTER COMPATIBLE BIOREACTOR FOR TENDON TISSUE ENGINEERING

A THESIS APPROVED FOR THE
STEPHENSON SCHOOL OF BIOMEDICAL ENGINEERING

BY

_____
Dr. Vassilios Sikavitsas, Chair

_____
Dr. Matthias Nollert

_____
Dr. Barbara Safiejko-Mroczka

© Copyright by ZACHARY RAY MUSSETT 2016
All Rights Reserved.

Acknowledgements

I would like to first thank my advisor, Dr. Vassilios Sikavitsas, for his constant support and guidance in both life and research these past few years. It is easy to say that, were it not for his intervention, I would not be writing this document today. Additionally, I am of course grateful to my other committee members, Dr. Barbara Safiejko-Mroczka and Dr. Matthias Nollert whose education and guidance I am eternally grateful for. Special thanks to the CBME office staff, Wanda Gress, Donna King, Madena McGinnis and especially Terri Colliver for always being helpful and keeping me and my paperwork on track. And, the SBME secretary PJ Meek for being constantly pleasant to work with.

I would also like to thank my coworkers and peers for their support and goading throughout all of this: Aaron Simmons, Cortes Williams, Zach Yokell, Julien Arrizabalaga, Patrick McKernan, Jin Liu, James Buerck and Needa Virani with special shout-out to my former roommate Reggie Renteria. Their presence has been both a driving force and stumbling block at times, but one that was always welcome. Special thanks to now Dr. Brandon Engebretson for his training when I first joined this lab as a lowly undergrad and convincing me that research was worth pursuing.

Lastly, I need to thank my family, Tracy, Lisa and Elizabeth Mussett for their never-ending fountain of support and assurance. And no thank you would be complete without acknowledging my soon-to-be wife Kristen Clingan, without whom I would have achieved none of this.

Table of Contents

Acknowledgements iv

List of Tables vii

List of Figures viii

Abstract ix

1. Introduction 1

2. Cell Conditioning Techniques 2

2.1 Mechanical Stimulation 4

2.2 Gene Delivery 8

2.3 Chemical Stimulation 11

2.3.1 TGF-β 11

2.3.2 FGF 14

2.3.3 IGF-I 16

2.3.4 Other 17

2.4 Other Cues 19

3. Biomaterials 21

4. Research Plan 24

4.1 Materials and Methods 33

4.2.1 Scaffold Preparation 33

4.2.2 Cells 33

4.2.3 Experimental Design 34

4.2.4 Mechanical Analysis 36

4.2.5 Cell Proliferation 36

4.2.6 Histology 36
4.2.7 Gene Expression 37
4.2 Bioreactor Redesign 24
4.2.1 Rapid Prototyping Design 24
4.2.2 Electronic Signal Generator 30
4.3 Sterility Verification 38
4.3.1 HUV Testing 38
4.3.2 Chemical Testing 40
4.3.3 Sterilization Verification 40
4.3.4 Results 40
References 41
Appendix A: Signal Generator Testing 50

List of Tables

Table 1: List of experimental groups..... 35

Table 2: List of Genes for RT-PCR..... 39

List of Figures

Figure 1: Bioreactor System 24

Figure 2: Sketch of Bioreactor Base 25

Figure 3: Bioreactor Base – Dock for Tubing 26

Figure 4: Bioreactor Sketch – Extra Plane 27

Figure 5: Bioreactor Sketch – Top 28

Figure 6: 3D Printed Bioreactors 29

Figure 7: Wavetek Signal at ~100 Hz 50

Figure 8: Wavetek Signal at ~0.1 Hz 50

Figure 9: Wavetek Signal at ~0.01 Hz 51

Abstract

Tendon and ligament tissue engineering aims to provide an alternative tissue graft for patients with acute injuries that require surgical intervention. Alternatives are necessary due to limited availability of allografts and autografts or other shortcomings in current biomaterial technologies. Tissue engineering accomplishes this through the combination of three key components: a cell source, scaffold and mechanical or chemical stimulation. While mechanical stimulation is the gold-standard for achieving tenogenic differentiation in progenitor cells, this work discusses many different methods of stimulation a differentiative response. Additionally, a great amount of recent work has been done in the field of biomaterials, and discovering new materials that can be combined with cells and stimulation techniques to achieve a more suitable graft.

Additionally, further work is needed in optimizing the mechanostimulation regimen utilized in cultures. This work proposes a study in which shorter stimulation times are incorporated within more frequent rest periods to allow cells time to adapt and overcome refractory periods. Additionally, a new method of designing and producing bioreactors is proposed using fused deposition modeling, the most common 3D printing method, that allows for easy changing and rapid production of replacement parts. Finally, new protocols were developed to isolate infection sources in bioreactor cultures.

1. Introduction

Tendon and ligament injuries are among the most prevalent injuries affecting both athletes and senior citizens. Tendon and ligaments possess very limited healing capabilities, due to sparse cellularity and vascularity, and complete tears always require surgical intervention. If the torn ends of the tissue cannot be sewn back together, a graft is taken from either a cadaver (allograft) or from a donor site in the patient (autograft). Both graft types contain major limitations such as limited availability, immune rejection and donor site morbidity. With over 200,000 people in the US alone [1] requiring a graft annually, regenerative medicine is a promising alternative for patients.

Tissue engineering and regenerative medicine seek to create suitable tissue replacements by utilizing one or any combination of the following: A cell source such as stem cells or primary fibroblasts, a biocompatible scaffold to provide mechanical support and replace lost tissue, and chemical or mechanical stimulation that drives cell growth or differentiation in a desirable manner. By combining these components *in vitro* a suitable graft can be cultured, approximating the properties of native tissue. This graft can then be implanted at wound sites *in vivo* to allow faster and more complete recovery times. Tendon and ligament tissue engineering seeks to combine these concepts to the specific application of tendon or ligament replacements.

For tendon and ligament tissue engineering, stem cells are commonly used as the cell source, as primary tenocytes or fibroblasts do not proliferate fast enough for conventional therapies. One of the most difficult aspects of tendon and ligament tissue engineering is reliably differentiating progenitor cells and cell conditioning techniques

will be discussed in chapter 2. Additionally, the majority of recent work in the field has been in the investigation of new biomaterials for scaffold material which will be discussed in chapter 3. Lastly, future work and bioreactor design will be discussed in chapter 4.

2. Cell Conditioning Techniques

One major hurdle facing an alternative regenerative medicine therapy is being able to reliably condition precursor or primary cells *in vitro* prior to patient transplantation. Cell conditioning techniques fall into broad categories: mechanical stimulation involving oscillatory stretching or sonic vibrations, chemical stimulation which involves growth factors or other cell signaling markers and lastly gene therapy where tendon/ligament genes can be directly added to precursor cells' or proliferative genes can be added to primary cells.

Ligament and tendon tissue are similar, but do possess some important differences that impact how cell conditioning will be carried out. Tendons contain almost exclusively collagen type I with small amounts of collagen type III and elastin. Ligaments, while still mostly type I collagen have up to 10% collagen type III and a much higher elastin content. Ligaments also possess a higher percentage of ground substance compared to tendons. These differences in physical makeup allow ligaments to be much more elastic and handle forces in both lateral and axial directions, compared to tendons who largely handle loads in a single direction. These differences allow a wide range of motion in joints without risking an acute injury every time we stretch and allows tendons to sometimes pull massive loads without tearing whenever we lift heavy objects. Despite these differences, many studies use similar growth factors and

mechanical stimulation regimens, simply changing the starting cell line and scaffold material, hoping they can achieve the differences needed.

Several important markers will be considered in evaluating the tendon or ligament like quality of a scaffold. Mimicking the mechanical properties of natural tendons and ligaments is the most important metric to prevent new ruptures post-surgery. The mechanical properties of human tendons are extensively documented with tensile strengths ranging from 30 – 200 MPa depending on placement within the body and elastic moduli ranging from 1 – 2 GPa. Tensile strength of human ligaments is similar but slightly less than that of tendons while elastic moduli range 200 – 300 MPa for most ligaments.

Many studies working with progenitor cells examine the expression of tendon and ligament genes as a marker for differentiation. COL-I and COL-III are two genes that regulate the production of collagen type I and collagen type III, the primary components of both tendons and ligaments. The presence of SCX and TCN genes that code for scleraxis and tenascin-C respectively are examined in many studies. Scleraxis is a unique early time marker for tenogenic differentiation. Studies examining stem cell differentiation into tenocytes will generally see an early upregulation of scleraxis before it begins to fall in late term cultures. Tenascin-C is a glycoprotein secreted by mature fibroblasts found in both tendons and ligaments and serves as a good late term marker of differentiation. Tendons and ligaments both have a distinctive appearance characterized by dense regular connective tissue all aligned in a single direction; this makes it necessary for a majority of studies to include histological staining of tissue samples.

Another, more qualitative, method of examining scaffold quality is by histological staining to gauge fiber alignment, cellular migration and extracellular matrix (ECM) density. Tendon and ligaments are both dense, regular connective tissues that have a very specific structure. Collagen fibrils are woven into crimped fibers that are all oriented in one direction. Additionally, these fibers do not traverse the full length of the structure and overlap and slide past each other. These fibers are also very densely packed with cells sparsely distributed throughout. The most popular method of staining is via hematoxylin and eosin (H&E) staining. Hematoxylin is a basic stain that will bind to acidic compounds such as DNA/RNA, which will cell nuclei a bluish color. As a counter stain, eosin is acidic and will bind to positively charged amino-acid side chains on proteins, marking collagen fibers pink. H&E staining will clearly show fiber alignment which can be quantitatively examined using anisotropy computing tools. Cells are normally seeded on the surface of a scaffold, unless special fabrication techniques allow for interior seeding, so the depth cells have penetrated into the scaffold can also be learned from H&E staining. Natural tissue is diffuse with cells so ensuring artificial scaffolds mimic this is important. Lastly, many tissue engineering scaffolds are not as dense as natural tendon to allow for cells to more easily penetrate the tissue. The void space between fibers can be viewed as another method of qualitatively assessing scaffold quality.

2.1 Mechanical Stimulation

Mechanical stimulation is required to achieve tenogenic differentiation and even maintain tenogenic properties [2]. Utilization of mechanostimulation without growth factors yields differentiation, marked by an increased tensile strength of the scaffold and

upregulation of tendon related gene markers. In the absence of any loading, tenocytes can dedifferentiate into immature fibroblasts, elucidating just how important structural loading is during conditioning [1]. The most common method of mechanical stimulation for tendon and ligament tissue engineering is through the use of a bioreactor. One end of a construct can be anchored to a static base while the other is connected to some form of actuator. While these bioreactors are almost always of a custom design, Bose manufactures a line of ElectroForce® bioreactors that can provide many different forms of mechanical stimulation to tissue constructs from simple axial stretch to full six degree-of-freedom movement. There are multiple components to the stimulation potential tendon and ligament grafts will undergo that vary between studies and must be considered: oscillatory vs static, uniaxial vs multidimensional, intermittent vs continuous, frequency, force and duration are all important variables. The values utilized for each variable are heavily dependent upon scaffold material and the robustness of the cell line. Stronger materials require heavier loads to transmit the requisite strain onto the cells, conversely precursor cells such as stem cells are generally not as robust as fibroblasts or other primary cell types and too much strain can induce apoptosis prior to differentiation. Frequencies for these studies range from 0.01 Hz to 1 Hz while forces are generally reported as % strain and can range from 2-10% [3, 4].

Wide variations in force can be seen throughout studies because forces applied to a scaffold do not equal the forces applied to the cells within. The force cells experience is dependent on internal deformations of the scaffold utilized which is heavily dependent upon material architecture. In natural tendons and ligaments, the method with which macroscopic forces are transferred throughout the interior is not

fully understood. Additionally, collagen fibers possess a characteristic crimp pattern that dampens the force being transmitted. Recent work suggests that shear forces of fibrils sliding past each other present the main mechanism of force transduction [5]. By isolating collagen fascicles from rat tails and examining them under confocal microscopy with uniaxial strain Szczesny *et al.* was able to directly observe the fibers deforming and form a representative model of fibril strain [5]. This marked the first time such deformation was directly observed. Better understanding of collagen force transduction will enable better designed mechanical stimulation regimes as strain induced apoptosis can be avoided. In polymer scaffolds, force transduction varies wildly depending on the material and studies have to be discussed on a case by case basis. Many scaffolds though consist of continuous spun fibers that traverse the length of scaffold, unlike the short sliding fibrils of collagen. Forces applied to cells within those scaffolds would be subjected to deformations within the material making the estimation of the deformation more challenging than collagen fiber force loading. Specific studies comparing polymer force transduction to cell loading have not been conducted at this time and may need to be examined further in the future.

Carefully controlling the mechanical forces is especially important in musculoskeletal organ conditioning. Most progenitor cells are capable of differentiating down ligament, tendon, bone and cartilage lines depending on environmental cues. Fluid shear forces tend to guide most adult stem cells towards the osteoblastic lineage [6] so encasing cells in the interior of a scaffold is a common tactic to avoid such stimuli. Rotational forces applied to scaffolds during stretching can also greatly effect collagen deposition patterns. Subjecting a scaffold to both axial and

rotational forces created collagen fibers that were helical in nature [4]. This pattern may reduce overall tensile strength in the axial direction since tendons almost exclusively experience unidirectional forces. However, biaxial strain has been utilized with positive effects to create a construct with more ligament like qualities [7]. For example, a ligament study conducted by Lee *et al.* used a regimen characterized by 10% tension with 12mm elongation and torsion characterized by a 45° rotation in alternating directions; the requisite force for such elongations was not specified. The constructs were subjected to this continuously for up to 7 days at a frequency of 1 Hz [8]. Their results showed an increased tensile strength of a decellularized tendon placed in a bioreactor without re-cellularization. They found that the collagen bundles could reorganize in a more efficient pattern without cell specific remodeling emphasizing the importance of the mechanostimulation regimen scaffolds are subjected to.

As an example of how wildly regimens differ, a study primarily concerned with the viability of tendon derived stem cells (TDSCs), found the ideal regimen for TDSCs to be 4% elongation at 0.5 Hz for 2 hr/day [9]. Utilizing this regimen yielded an ultimate tensile strength of 59.58 ± 7.81% of the original rabbit patella tendon they were targeting. Additionally, increased deposition of collagen type I and III was observed with an upregulation in tenascin-C expression. A supplemental study by the same group found that 8% elongation induced an inflammatory response in the TDSCs suggesting that over elongation mimics injury within tendons [10]. While this would appear to contradict the values utilized in the previously discussed ligament study, it is important to note that a decellularized scaffold void of cells was used in the ligament

study compared to a poly(L-lactide-co-ε-caprolactone)/collagen scaffold seeded with sensitive stem cells in the later study.

The previously discussed studies have utilized relatively fast frequencies at 0.5 and 1 Hz with either continuous or once a day stretching. This does not reflect the loading patterns of most tendons and ligaments in the body and many studies have had positive results using slower frequencies with intermittent stretch periods. Angelidis *et al.* utilized alternating 1 hour periods of stimulation and rest at 1.25 N and 1 cycle/min [11]. The decellularized rabbit tendons utilized were seeded with either stem cells or fibroblasts. After 5 days of culture in a bioreactor both groups exhibited no significant differences with natural tendons in either ultimate tensile strength or Young's modulus, though the fibroblast seeded scaffolds had the highest tensile strength between experimental groups. Using immunochemistry, they were also able to directly examine the cells elongating parallel to the direction of force, while unloaded scaffolds exhibited random orientation of cell nuclei with little elongation.

Recent work has investigated the use of magnetic fields to apply mechanical stimulation, in lieu of a traditional bioreactor. By incorporating iron oxide particles in a scaffold, magnetic forces can be transmitted into a scaffold interior [12]. And while cytotoxicity and cell compatibility results are promising and cells did begin to upregulate some tendon related genes, it is unclear how magnetic stimulation compares to traditional mechanical stimulation, but it is a possible direction for future study.

2.2 Gene Delivery

An additional source of cell conditioning outside of the realm of normal growth factors and mechanical stimulation is the use of gene delivery to alter cell behavior

towards a desirable phenotype. Since scleraxis is the only known marker of tendon progenitor cells it makes an easy target for gene delivery approaches. One method is to use lentiviruses carrying the SCX gene to insert the gene into mesenchymal stem cell genetic material. Statically culturing such MSC's led to more elongated morphology with expression of COL-I and TCN [13]. Mechanically stimulating such MSCs led to the scaffold free creation of a tendon like collagen sheet that researchers were able to ectopically transplant into immune-deficient mice. This eventually led to a dense connective tissue exhibiting a crimp pattern in the collagen fibers similar to that observed in natural tendons. It is hypothesized that the overexpression of scleraxis causes blockage of the bone morphogenic protein (BMP) receptors that would sometimes drive cells down an osteoblastic pathway in culture. Additional groups have taken SCX upregulated MSCs and injected them directly into wound sites of rat Achilles' tendon [14]. These injections significantly improved the rat tendons healing capabilities and progenitors of the injected cells were shown to be at the wound site up to 16 weeks post-surgery. Such promising results illustrate the importance of scleraxis upregulation in early cultures and could prove to be a promising step towards an artificial tendon graft.

Even though BMP-2 normally drives cells down an osteoblastic lineage, one group found that by engineering MSCs to co-express BMP-2 and Smad8, an intracellular protein involved in the transformative growth factor beta (TGF-β) pathway, MSCs could be selectively driven towards a tenogenic lineage [15, 16]. Normally, injection of BMP-2 overexpressing MSCs at a wound site inevitably would lead some cells to undergo osteoblastic differentiation with bone being ultimately formed in the

wound site. Any amount of calcification in a tendon is obviously unacceptable. By taking BMP-2 expressing MSCs and forcefully upregulating Smad8, injection of these cells resulted in increased stiffness of the healed tendon, but not an increase in ultimate tensile strength or elastic modulus compared to non-modified cells. Promisingly though, no calcium deposits were observed after 12 weeks. The Gazit group hypothesized that Smad8 competitively inhibited the BMP-2 pathway [15]. The inhibition of this pathway and the blocking of the osteoblastic lineage achieved shorter recovery times. Future work needs to be completed adding key variables like mechanical stimulation and an appropriate scaffold to further explore the viability of this approach.

Overexpression of EGR1 in another study drove MSCs towards a tenogenic lineage [17]. EGR1 is normally a transcription factor with a variety of functions, but specifically in tendon healing Guerquin *et al.* found that it functioned as a direct agonist for Col1a1 and Col1a2 promoters on MSCs and had an indirect effect on scleraxis production. Additionally, in mice with the EGR1 gene knocked out, collagen fiber diameter was markedly reduced and the animal's ability to heal from injury was diminished. Evidence also suggests, that mechanical stimulation causes the expression of EGR1; further strengthening its role in tendon and ligament development [18]. As with the previously discussed gene delivery approaches, combinations of EGR1 overexpression and mechanical stimulation with an appropriate scaffold need to be investigated further for possible use in tissue engineering strategies.

2.3 Chemical Stimulation

Chemical stimulation of cells for tendon and ligament tissue engineering relies on the intake of signaling molecules from culture medium. Many utilized factors are cytokines such as fibroblast growth factor (FGF), growth differentiation factor (GDF), platelet-derived growth factor (PDGF) and transforming growth factor beta (TGF-β). All of these chemicals have been observed directing *in vitro* progenitor cell cultures towards tendon-like or ligament-like phenotypes.

2.3.1 TGF-β

Transforming growth factor-beta (TGFβ) is part of a cytokine super family that performs a variety of functions in the body [19]. TGF-β is seen throughout almost all stages of tendon healing but is most active during inflammation. It is known to help regulate factors such as cell differentiation and cell phenotype of tendon and ligament cells and induce expression of extracellular matrix proteins and stimulates production of collagen by tendon fibroblasts [20-22]. TGF-β activates signal transduction through transmembrane serine/threonine kinase receptors which in turn leads to both Smad-dependent and Smad-independent downstream processes [23].

Several growth differentiation factors within the TGF-β superfamily are involved in multiple important cell functions such as proliferation, differentiation, and extracellular matrix formation [24]. Specifically, GDFs-5, -6, and -7 are crucial participants in regulating tendon and ligament tissue development and the repair process [25-29]. These three GDF factors also form a sub group within the TGF-β group that is known as the bone morphogenetic protein (BMP) gene family [30]. Growth factors are often used to direct and promote *in vitro* cell conditioning within biomaterials. The roles

of these growth factors on *in vitro* cell conditioning within biomaterials have been explored in several studies attempting to tissue engineer tendons and ligaments.

Jenner *et al.* investigated the role of recombinant human transforming growth factor-β 1 and growth differentiation factor 5 (GDF-5, also known as BMP-14 [31]) on human bone marrow stromal cells (BMSCs) cultured on woven, bio-absorbable, 3D poly(lactic-co-glycolic acid) scaffolds for ligament tissue development [32]. There were very limited differences between the two growth factors and their effect on tenascin-C, however, TGF-beta1 significantly improved production of collagen type 1 whereas GDF-5 was limited to only affecting cell proliferation. Ozasa *et al.* compared the effects of GDF-5 on muscle-derived stem cells (MDSC) and bone marrow stromal cells in an *in vitro* tendon healing model [33]. The tendons harvested were canine flexor digitorum profundus, and were seeded with MDSCs. The presence of GDF-5 maintained a significantly higher stiffness that may improve the outcome of tendon wound healing. Hayashi *et al.* utilized a collagen gel scaffold within a tendon healing model also consisting of canine flexor digitorum profundus tendon. The collagen gel was seeded with BMSCs and treated with GDF-5 [30]. At the end of 2 and 4 weeks, the combination of BMSCs with GDF-5 accelerated tendon healing activity, but the use of BMSCs without GDF-5 or the use of GDF-5 alone was not effective.

Another approach for tendon tissue engineering used in a study by Vuornos *et al.* involves a braided polylactide copolymer filament scaffold seeded with human adipose stem cells. The goal was to treat the cells with GDF-5 and ascorbic acid for tenogenic differentiation. The study concluded that the growth factor with ascorbic acid

rapidly produced collagen and upregulated tenogenic gene expression markers after two weeks of culture [34].

The effect of GDF-5 on cell proliferation and gene expression was investigated by James *et al.* on primary adipose-derived stromal cells (ADSCs) that were cultured on poly(DL-lactide-co-glycolic acid) PLAGA fiber scaffolds for tendon tissue development. The fibrous scaffolds were electrospun mimicking, as close as possible, the microenvironment of the native tendon with GDF-5 supplemented in the culture medium [35]. At 7 and 14-day time points, cells that were maintained on PLAGA electrospun scaffolds showed increased cell proliferation when treated with 10ng/ml and 100ng/ml of GDF-5 when compared to 0ng/ml concentrations. Expression of collagen type I and scleraxis, were also significantly higher when treated with GDF-5.

Growth differentiation factor-6 (also known as BMP-13) however did not show any improvement on a rat tendon model when overexpressed in MSC cells in a study by Gulotta *et al.* The results of this study did not demonstrate any differences in collagen formation or increase in biomechanical strength [36], likely ruling out GDF-6 for future studies.

In studying tendon tissue formation, Lee *et al.* characterized the rat BMSC cell response to Growth differentiation factor 7 (GDF-7 also known as BMP-12). BMSCs were seeded onto 3D collagen sponge scaffolds before being treated with 10ng/mL of GDF-7 [37]. The effect of the GDF-7 treatment showed increased cell proliferation, elongation, and expression of tenascin-C as compared to scaffolds not treated with the growth factor.

Kishore *et al.* have investigated using the extracellular microenvironment to induce tenogenic differentiation of human MSCs. This is accomplished by synthesizing electrochemically aligned collagen threads that mimic the native tendon tissue [38]. The results show that tendon gene expression markers such as scleraxis and tenomodulin were significantly increased on these electrochemically aligned collagen threads compared to randomly sorted collagen threads despite a lower rate of proliferation. The lower proliferation rate was likely due to the cells differentiating down a fibroblastic pathway thereby lowering their proliferative capabilities. Next BMP-12 (GDF-7) was supplemented into the human MSCs medium to determine how well the scaffolds influenced tenogenic differentiation. There was no additional effect on tenogenic differentiation of the MSCs on the electrochemically aligned collagen thread scaffold with the inclusion of BMP-12, indicating that the scaffold itself has a lot of potential to be used as a source of tendon tissue replacement.

2.3.2 FGF

Basic fibroblast growth factor (bFGF) significantly affects fibroblasts, as can be seen by a dose-dependent increase [39] in cell proliferation and collagen type III production in rat tenocytes [40]. Subramony *et al.* designed a polylactide-co-glycolic acid (PLGA) nanofiber-based scaffold that resembles the native ligament extracellular matrix for ligament regeneration [41]. Human mesenchymal stem cells (hMSC) were primed *in vitro* with basic fibroblast growth factor (bFGF) to enhance ligament cell formation prior to the application of mechanical stimulation. The PLGA scaffolds were produced using electrospinning. MSC response to chemical stimulation was measured by cell growth and collagen content. The results of this study show that there was an

increase in cell proliferation due to cell treatment with bFGF and upregulation of types I and II collagen, fibronectin and tenascin-C on the nano-fiber meshes. Sahoo *et al.* reported similar findings when utilizing bFGF to stimulate MSCs on silk/PLGA hybrid fiber scaffolds for ligament regeneration [42, 43].

Petrigliana *et al.* investigated the use of a bFGF-coated, three-dimensional (3D), polymer scaffold for ligament tissue engineering [44]. 3D porous polycaprolactone (PCL) scaffolds treated with bFGF at doses of 0 ng, 100 ng, and 500 ng were seeded with bone marrow stromal cells (BMSCs) and cultured under static conditions. An increase in collagen I, collagen III, and tenascin-C were seen at 24 hours, 7 days, and 21 days. The effects of low dose (3 ng/ml) fibroblast growth factor 2 were demonstrated by Hankemeier *et al.* on the cell proliferation and differentiation of BMSCs for the tissue engineering of tendons and ligaments. It was shown that in the presence of a low dose of bFGF, collagen I, collagen II, and smooth muscle actin were enhanced at a higher level compared to the exposure to a higher dose of bFGF [45].

RGD-modified silk fiber matrices seeded with BMSCs were examined by Moreau *et al*. These matrices were cultured with bFGF or epidermal growth factor (EGF) prior to mechanical loading in this study. Stimulating the BMSCs with bFGF for five days showed modulated protein expression in the silk fiber scaffolds as well as increased cell activity and tissue development compared to the scaffolds primed with EGF [46]. All samples treated with bFGF or EGF were then treated with transforming growth factor-beta (TGF-β). All non-control samples showed significant *in vitro* ligament development by day 14 on the silk fiber scaffolds [47]. Additionally, by sequentially introducing bFGF and TGF-β3 and IGF-I, one group was able to expand

primary cultures *in vitro* for longer culture times than previously achieved [48]. Combination of this regimen with a silk scaffold resulted in tensile strengths higher than that of native tendons.

Wodewotzky *et al.* seeded canine multipotent mesenchymal stromal cells on collagen membranes treated with or without hyaluronic acid for tendon tissue regeneration. The benefit of bFGF was also investigated. In all cases, the scaffolds treated with bFGF significantly increased the proliferation capacity of the mesenchymal stem cells [49]. An *in vitro* wound closure model was investigated by Chan *et al.* to determine the effect of bFGF on the response of cultured rat patellar tendon fibroblasts. The wound model was treated with 2 ng/mL of bFGF and showed enhanced cell proliferation, while an increased bFGF concentration showed little improvement [50].

2.3.3 IGF-I

Insulin-like growth factor has been found to increase collagen production in various tendon and ligament models and is involved in the matrix synthesis of wound healing. DesRosiers *et al.* treated canine anterior cruciate ligament fibroblasts with IGF-1. The study showed how IGF-1 stimulates fibroblast proliferation and extracellular matrix synthesis [51]. Hortensius *et al.* seeded human mesenchymal stem cells from human bone marrow onto collagen-glycosaminoglycan scaffolds supplemented with IGF-1. Sulfated glycosaminoglycan on the scaffold was more likely to bind to IGF-1 than non-sulfated, affecting overall cell attachment and activity [52]. Murphy *et al.* examined the effects of IGF-1 on tenocyte activity within superficial digital flexor tendon explants. IGF-1 increased collagen synthesis for types I and III [53].

Caliari *et al.* examined the effects of PDGF-BB and IGF-1 to treat primary horse tenocytes cultured on anisotropic collagen-GAG scaffolds for the purpose of tendon tissue regeneration. It was found that although pore size affected cell distribution throughout the scaffold after 14 days, overall, the use of either PDGF-BB or IGF-1 significantly improved tenocyte cell proliferation and cell attachment. However, PDFG-BB dose of 100 ng/mL exhibited a much higher tenocyte cell metabolic activity than IGF-1 [54].

2.3.4 Other

It can also be noted that scaffolds with functionalized with biomolecules have also been shown to affect *in vitro* cell conditioning. Sahoo *et al.* developed three versions of an electrospun hybrid polymer scaffold to determine if scaffold coating techniques could facilitate cell attachment and proliferation [55]. Knitted scaffolds were coated with either a thin film of poly(E-caprolactone) (PCL), poly(DL-lactide-co-glycolic acid) (PLGA), or using a film of collagen type I. Each scaffold was seeded with porcine bone marrow stromal cells (BMSCs) with cell proliferation notably larger on the PLGA and collagen I coated scaffolds. Liu *et al.* used knitted silk scaffolds seeded with human bone marrow-derived mesenchymal stem cells (hMSCs) with and without fibrin gel to study the effects for ligament tissue engineering. It was found that the fibrin gel increased cellular function when analyzed for collagen types I and III and tenascin-C gene markers [56]. Seo *et al.* also compared the use of a silk scaffold with a composite silk scaffold containing a lyophilized collagen-hyaluronic acid substrate. Rabbit tenocytes were seeded onto the scaffolds and cultured *in vitro*. Cell density was significantly larger on the composite silk scaffold after 30 days [57]. The effect of fiber

chemistry and braiding angle of scaffolds was investigated by Czaplewski *et al.* for regeneration of tendon and ligament tissue. After braided submicron fibrous scaffolds were developed, they were seeded with human induced pluripotent stem cell-derived mesenchymal stem cells. The stem cells were not supplemented with tenogenic medium [58]. It was found that the cell lineage and cell adhesion was affected by the fiber chemistry and braiding angle. Larger scaffold braided angles had a higher likelihood for tenogenic differentiation.

Similar to coating scaffolds in bioactive molecules, embedding growth factors within a polymer to be released through controlled degradation is a common strategy for *in vivo* growth factor delivery. Stromal cell-derived factor-1 (SDF-1 alpha) was investigated by Shen *et al.* as a method of *in vivo* cell recruitment. SDF-1 alpha is a cytokine that regulates stem cell migration and cell recruitment during inflammation [59, 60]. SDF-1 alpha was incorporated within a knitted silk-collagen sponge scaffold, and three cell sources were used including rate bone mesenchymal stem cells (BMSCs), hypo-dermal fibroblasts (HDFs), and Achilles tendon fibroblasts (ATFs). Each cell line was treated with 200 ng/mL within the scaffold [61]. Gene markers sensitivity varied among the three cell sources. BMSCs and HDFs markers for cell migration and CXCR4 responded to SDF-1 alpha more than ATFs, whereas ATFs gene marker for tendon repair showed more sensitivity. Additionally, migration of fibroblast like cells increased while accumulation of inflammatory cells decreased after scaffold implantation into injured rats. Evidence was also found that suggested SDF-1 increased collagen I deposition, further increasing implanted scaffold quality. SDF-1 alpha was also examined by Caliari *et al.* among other growth factors. Equine tenocytes were cultured

onto aligned anisotropic collagen-GAG scaffold for use in tendon tissue engineering. SDF-1 alpha had a positive effect on tenocyte cell migration, collagen synthesis, and tendon gene expression [62]. Tenogenic differentiation is enhanced by anisotropic scaffolds when compared to a standard control [63].

Musson *et al.* evaluated the novel use of non-mulberry silk fibrin scaffolds (Spidrex) for tendon regeneration. Spidrex was seeded with primary human or rat tenocytes and compared with a knitted bombyx mori silk scaffold, 3D collagen gel, and fiberwire. Rat tenocytes cultured on Spidrex had an increased expression of tenogenic genes (fibromodulin, scleraxis, and tenomodulin) supporting the scaffold for use *in vivo* applications [64].

2.4 Other Cues

A common strategy is the use of pre-aligned fibers to promote ECM deposition in the same direction and cell expansion along set guidelines. This is especially important in polymer fiber scaffolds as the fibers will naturally acquire a random orientation, but by aligning all the fibers in the same direction an increase in mechanical strength can be achieved, while the presented topographic information may induce differentiation [65, 66]. Stem cells cultured on an aligned poly-L-lactic acid (PLLA) scaffold exhibited upregulation of scleraxis at day 3 compared to a scaffold with randomly oriented fibers. At day 7 the scaffold with randomly oriented fibers began to show upregulation of osteocalcin and ALP indicating an osteoblastic lineage. No other stimulation was provided beyond fiber orientation, emphasizing how important that can be. Additionally, culturing cells on the aligned fibers with osteogenic induction media

limited the production of osteoblastic markers below levels normally observed. Similar effects can be seen with the use of 3D printed aligned fibers in a collagen gel [67].

It's important to note that two-dimensional topography can be important but does not translate directly into *in vivo* models. English *et al.* examined the use of aligned grooves in a cell culture substrate to induce tenogenic differentiation and found that ~2 micron deep groves could induce tenogenic differentiation in 2D cultures [68]. But, implantation of these scaffolds failed to yield positive tissue repair compared to randomly oriented 3D scaffolds. Further work is necessary to elucidate the effect of 3D substrate topography in tendon regeneration *in vivo.*

Cell seeding density can also have a drastic effect on ultimate cell outcome, especially when cells are enclosed within a scaffold to block shear forces. Issa *et al.* conducted a study utilizing human umbilical veins (HUVs) as a scaffold material and found no growth in cell numbers at high seeding densities (10 million cells/mL) along with high numbers of lysed cell bodies [69]. Conversely at low seeding densities (3 million cells/mL), cell numbers increased exponentially after just a single week. Additionally, an investigation into the mass transport limitations of the scaffold found that no molecules over 20 kDa could penetrate through the scaffold to the interior where cells resided. Veins have a similar physical makeup to tendons and ligaments however they are less dense with a much greater concentration of elastin. With that in mind, a mature tendon/ligament most likely experiences even greater mass transport limitations than those seen by Issa. However, tendon stem cells have been observed performing better under hypoxic conditions [70]. So there are benefits to having mass transport limitations. Knowledge of this nutrient deficiency should be incorporated into future

study designs as both a potential pitfall and boon for maintaining stem cell proliferative qualities for longer durations.

3. Biomaterials

The majority of recent work in the field of tendon and ligament tissue engineering has focused on biomaterials. Because of the high demand for natural tissues, it may be more feasible to turn to alternative materials for grafts. Decellularized tendons, be it from human or animals, are not normally utilized as scaffolds because their dense collagen does not allow adequate penetration for recellularization and other natural tissues can vary wildly in physical properties. However, customized collagenous scaffolds are a promising alternative to these native tissues [71]. The simplest application of collagen scaffolds is the application of a sponge at an injury site. One group has examined the use of a simple acellular collagen type I sponge in a rat model of tendon injury [72]. Working under the hypothesis that healing tendons will resorb and incorporate surrounding collagen, a 3 mm x 2 mm x 1 mm collagen sponge was implanted at the site of an Achilles tendon transection. While after 4 weeks, both control and sponge group had the same strength, the sponge group had reached functional strength at the 2-week mark, a marked increase in recovery time. One group used a similar sponge that was seeded with tendon derived cells [73]. *In vitro* cultures of the sponges yielded promising results but further study is necessary, possibly through the inclusion of a bioreactor for mechanostimulation during culture.

Further sophistication of collagen scaffolds can be reached by aligning the fibers specifically. One group recently investigated different manufacturing methods to create aligned collagen scaffolds for MSC culture [74]. By dialyzing collagen against PEG

and then polymerizing the collagen in different ways they were able to create different levels of reproducible alignment in the scaffolds. One of the most interesting findings was that the fibers on the boundaries were generally not aligned, suggesting boundary conditions can control the alignment of collagen fibers. Unfortunately, this work was mostly done in 2D scaffolds targeting bone tissue grafts, but their results could be transferred to tendon and ligament tissue engineering. MSCs cultured on their scaffolds were shown to spontaneously orient themselves in with the direction of the fibers. Further investigation could yield scaffolds suitable for tendon and ligament grafts.

Combining collagen with other biomaterials allows for high biocompatibility while possibly circumventing some of the structural weakness a pure collagen scaffold might possess. In one recent study, a collagen, 1,4-butanediol diglycidyl ether (BDDGE) and elastin gel (CBE gel) membranes were fabricated and then braided together to produce a strong inner structure. This braid was coated in a CBE gel tube that had axially aligned pores produced through specific freezing and freeze-drying to guide cellular migration [75]. This scaffold was seeded with MSCs and implanted in a rat Achilles heel model to determine safety and efficacy. Mild improvements were observed in rats' healing 8 weeks post-surgery, more refinements are needed before the material is ready for human trials. Specifically, the outer shell was too large to be implanted in the rat model, so only half the scaffold was available for *in vivo* analysis. Similar multi-layer scaffolds have had promising results [76], and future work is needed in this area.

One popular method of scaffold fabrication is via electrospinning. Electrospinning uses electric forces to draw out charged fibers with diameters in the

nanometers. These fibers can then be woven together in such a manner that somewhat emulates the structure of collagen in tendons and ligaments making it a popular tool. Recently, an electrospinning process has been developed that will allow for crimped PLA fibers [77]. These crimped samples exhibited ultimate tensile stresses roughly double that of the un-crimped samples. This production technique was compatible with tendon fibroblast cultures, and could pave the way for a new paradigm of biomimetic materials. Another group, has developed a method to anisotropically align electrospun fibers into sheets that are then woven into tubular structures for tendon scaffolds [78]. Another method of electrospinning involves co-spinning different polymers together, by spinning poly(ε-caprolactone) and methacrylated gelatin together, one group achieved tenogenic differentiation after treatment with TGF-β3 along with promising physical properties [79]. And while these groups demonstrated cell penetration, many electrospun scaffolds exhibit poor cellular penetration as a result of limited porosity. To counter that, one group has developed a novel electrospinning technique that creates anisotropically aligned scaffolds with controllable porosity out of poly(ε-caprolactone) [80]. Electrospinning fibrous scaffolds looks to be a very promising method of scaffold formation as the field moves forward.

One of the largest issues facing tissue engineering strategies and current surgical therapies is the lack of a tendon-bone interface [2]. Current surgical methods involve mechanical fixation of a tendon to bone and have a higher and desired re-failure rate. The challenges of designing a material with such a wide range of properties are numerous, but recent work has been done to create these osteotendinous scaffolds.

4. Research Plan

4.1 Bioreactor Redesign

4.1.1 Rapid Prototyping Design

Bioreactors are integral in tendon tissue engineering. Many custom bioreactors are made out of interchangeable modules to facilitate easy cleaning and replacement. Our own bioreactors seen in Figure 1, consist of an acrylic base with 3 chambers for a scaffold to reside that can be filled with culture medium. The tops of the chambers are sealed with latex to allow for stretching and attached to a linear voice coil motor which is controlled by a digital signal generator. These units are unfortunately hard to service, as the glass and acrylic pieces are custom made. The glass tubes have custom nipples blown onto the top and bottom to allow for tube attachment and facilitate media circulation. These nipples are quite



Figure 1: Bioreactor System

Previous bioreactor system in which the custom glass resevoirs and acrylic base can be clearly seen. The tops are sealed with latex that is secured with dual 3mm zip ties. The hooks are connected to a linear voice coil motor (not pictured).

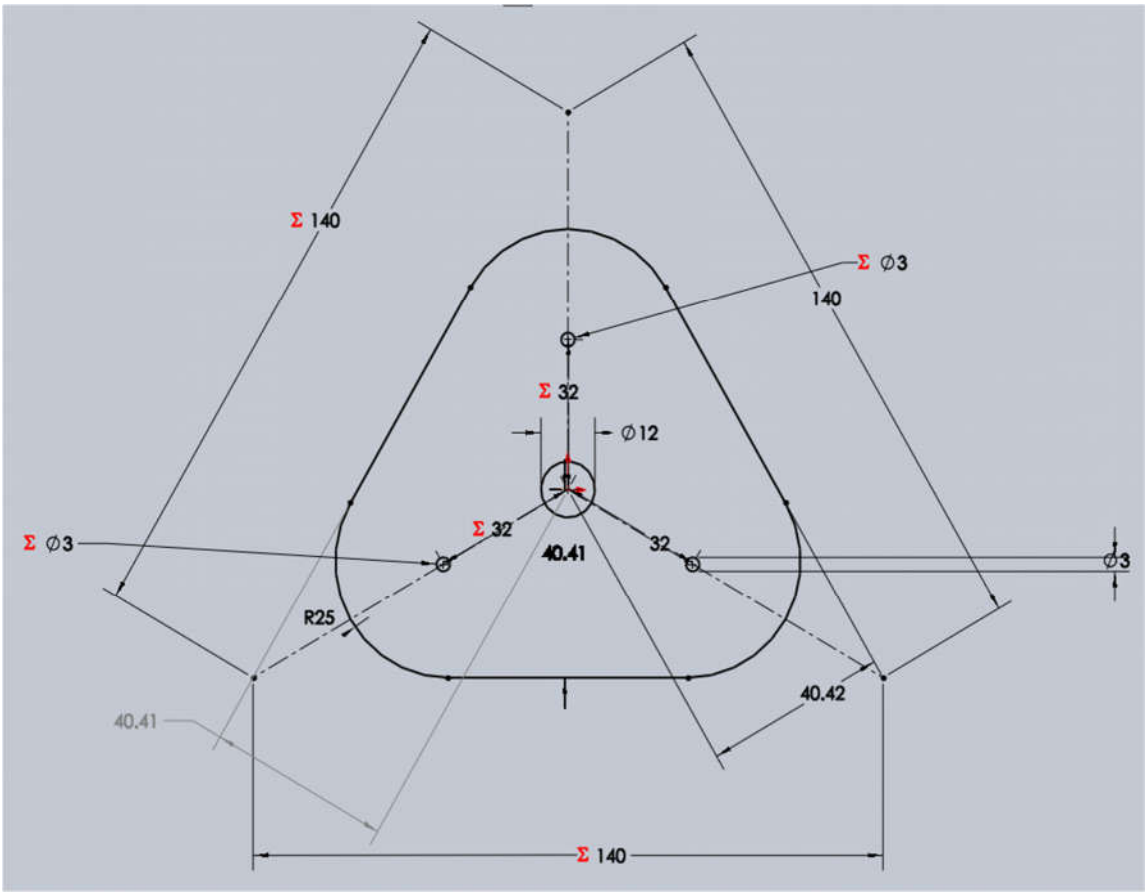

Figure 2: Sketch of Bioreactor Base
This is the lowest level of the Solidworks® sketch used to create the new bioreactor bases. The anchoring holes are laid out equidistant from the center along the 3 primary axis. The dimensions are related such that increasing one will increase the dimensions of all other parts.

fragile and if broken, the entire unit had to be scrapped. Additionally, we lack the in-house instruments to fabricate either these tubes or the acrylic bases. All of these factors combine to cause quite long repair times if we need to source replacement parts.

In an effort to reduce down time in the event of a malfunction, 3D printing has the potential to complete replace our dependence on outside products. Specifically, fused deposition modeling (FDM) can be utilized to create new, easily replaceable parts for bioreactor systems. And, while it would be easiest if all pieces could be created using FDM, complete replacement of the glass pieces is unfortunately impossible as a

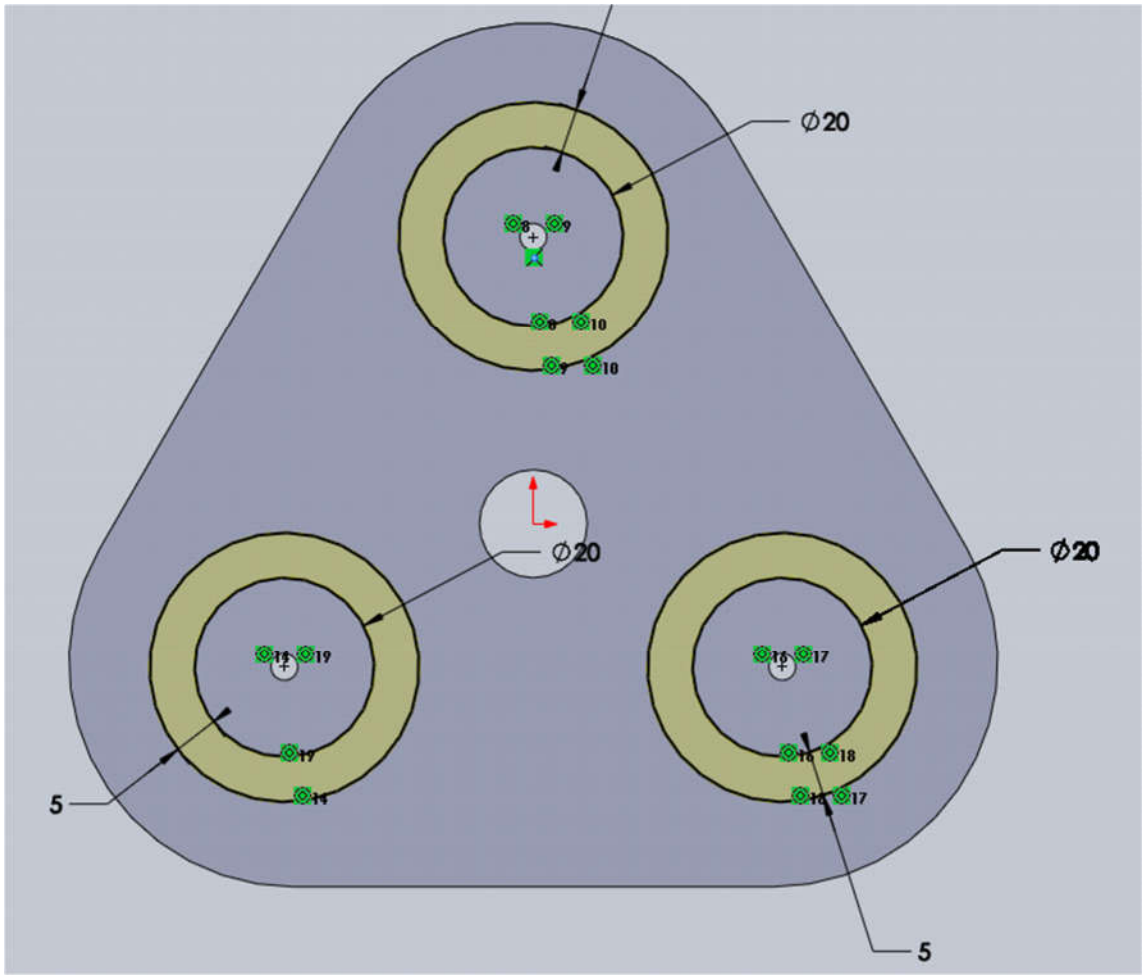

Figure 3: Bioreactor Base – Dock for Tubing
These concentric circles represent the docks that glass tubing can be inserted into in the bioreactor. Current dimensions are 20 mm in diameter with a 5 mm wall thickness.

viewing window is needed, so at least some glass tubing needs to be incorporated. For the FDM pieces, multiple criteria had to be taken into account, mainly, scalability, water-tightness and mass producible.

The parts need to be scalable to accommodate possible alternative scaffold materials. While our normally utilized HUV scaffolds have a uniform diameter, our lab is examining future work involving other scaffolds that possess different physical dimensions so easily tunable pieces are desired. This is easily obtained by relating

dimensions within SolidWorks®. In Figure 2, the starting sketch can be seen where each anchoring hole is set along a primary axis, equidistant from each other. Additionally, the dimensions are visible, so that it can be roughly seen how each dimension is related to each other. Equations are utilized such that if one dimension is changed, each other dimensions will adjust itself accordingly, leading to easy scaling of the part. This base is then extruded 1 cm to create a foundation for the bioreactor. On top of that foundation, a dock is created that glass tubing can be inserted to allow viewing of the samples. These are extruded 20 mm up to allow for secure glass insertion and room for media feed tubing. To create the media tube adapter, an additional sketch plane (Figure 4) was created offset from the front of the reactor by about 1 cm. Using this new plane, holes were cut through a single body to ensure full

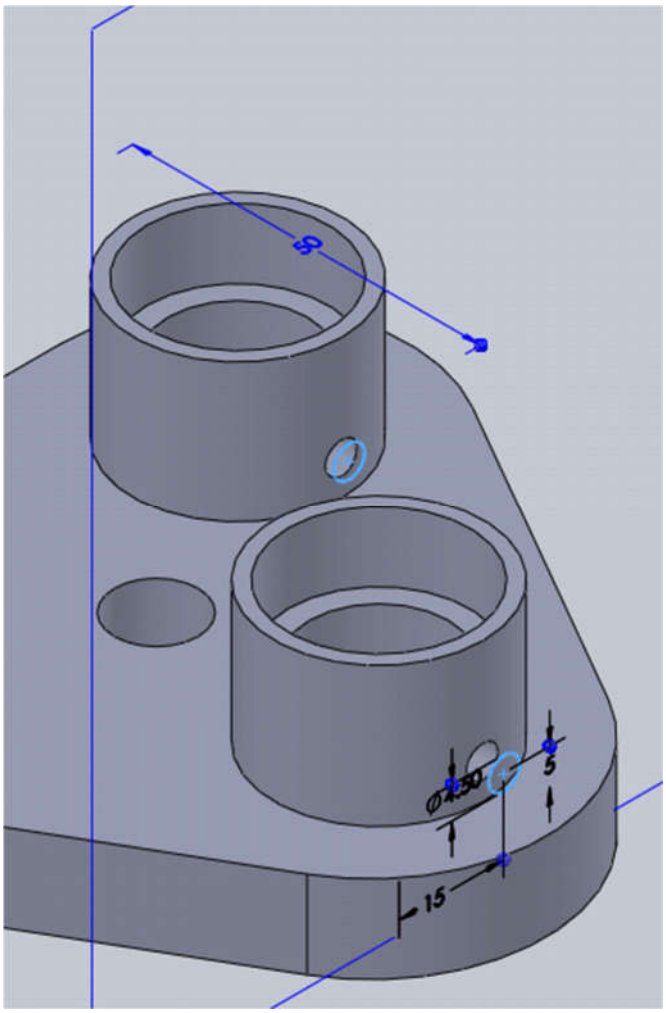

Figure 4: Bioreactor Sketch – Extra Plane
The new drawing plane can be seen in front of the glass tubing docks. Circles were cut through the docks using this plane to create an interface for media tubing.

clearance. These holes were centered using the dimensions of the base such that if the base changes dimensions, the holes will stay centered on the docks. The holes were cut to accommodate luer lock 1/8" tubing connecters from Cole Parmer Instrument Company, but can be sized to accommodate most common tubing connectors. Also visible in Figure 4 is the lip cut into the top of the docks seat glass tubing into. The shelf is equal to the wall thickness of the glass tubing utilized to create a uniform interior on the inside.

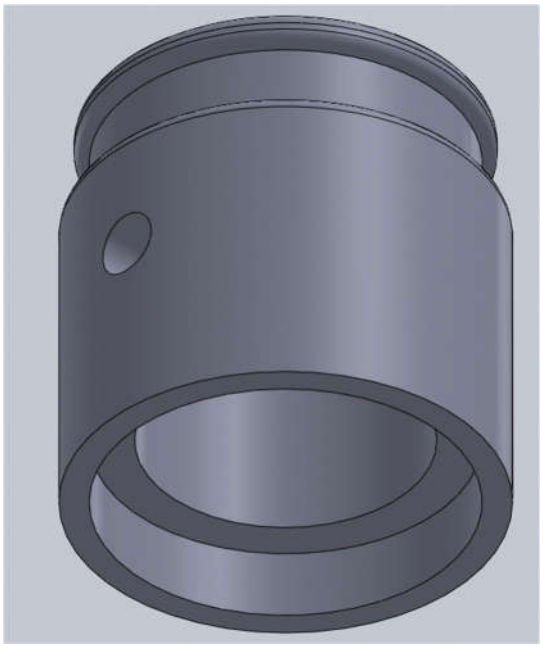

Figure 5: Bioreactor Sketch – Top
Top piece of bioreactor designed with a shelf for secure fitting on glass tubing, a hole for media tube connection, and a top chamfer for latex sealing.

While the glass tubing can be inserted into these docks and culture medium can flow into the chambers from the bottom, a top connector is needed to allow outflow and a secure place to attach our latex to ensure an enclosed system. The top pieces were designed (Figure 5) similarly to the bottom docks just discussed. They possess an inner shelf the same width as the glass wall thickness, a hole cut the size of a luer-lock 1/8" tubing adapter, but additionally have a chamfered insert on the top. This insert is 5 mm wide to allow for a 3mm zip tie to set comfortably inside it, and chamfered to ensure no sharp edges can cut the latex. This insert allows for a more reliable seal than the original design.



Figure 6: 3D Printed Bioreactors
Left: Bioreactor pieces coated in XTC-3D, sealed and filled with culture medium. Pieces are leak-proof, the color seen at the top and bottom of the glass pieces is simply because the 3D printed pieces are slightly translucent. Right: Same pieces without top seals and no culture medium, the adapters for tubing are clearly visible. Some running of the epoxy is inevitable during drying.

These parts were then 3D printed using a MakerBot Replicator 5th Generation printer. They were printed using "Natural" PLLA filament spools obtained from MakerBot. This PLLA filament is dye free and easily sterilized for use in cell culture applications. Unfortunately, without post-processing, 3D printed objects are generally quite porous and not water-tight, one of the original requirements. Several different sealant methods were tested, including silicone caulking and several different epoxies. For silicone, a layer was applied on interior surfaces using a cotton tipped applicator and allowed to dry for 24 hours. Water was then allowed to flow through the pieces for

at least 24 hours and examined for leaks. Silicone alone proved inadequate to seal these pieces as some sprang leaks immediately.

The same technique was used to test epoxy mixtures. Specifically, XTC-3D an epoxy manufactured by Smooth-On Inc. and advertised as a way to seal 3D printed objects easily. XTC-3d was mixed according to manufacturer instructions and an even layer was applied to all surfaces. Glass tubing and media tubing connecters were inserted and allowed to dry into the epoxy for a secure connection (Figure 6). Pieces were again allowed to dry for 24 hours. After drying, pieces had to be as a large lip had formed on the lowest edge of the pieces. Water was then allowed to flow through the objects for 24 hours. After 24 hours, XTC-3D coated pieces exhibited no leaking and were sterilized for testing in cell culture. These new bioreactors were then setup using the normal protocol laid out in section 4.3 Materials and Methods. Preliminary results utilizing the new bioreactors revealed no deviations from past results.

4.1.2 Electronic Signal Generator

Previously a Wavetek 185 Sweep Function Generator was used to generate a sin wave at 0.017 Hz and a calibrated amplitude to generate the necessary waveform for our mechanical stimulation. After noticing irregularities in the stimulation, I connected the signal generator to a signal analyzer to verify the sin wave. I began the test at 100 Hz and worked down to the requisite 0.01 Hz. At 100 Hz, the signal is verifiably a sin wave, but below that the signal devolved into noise. This evidence can be seen in Appendix A. Future experiments were carried out using a B&K Precision 4054 Signal Generator.

4.2 Research Proposal

Previously discussed studies in Section 2.1 Mechanical Stimulation did little to no optimization work on the duration of their mechanostimulation. At most two separate time groups were examined and the most beneficial group was chosen. Some optimization studies have been carried out though. Youngstrom *et al.* studied the effect of different strains using decellularized porcine tendons at 0.33 Hz and 1 hr/day [81]. Their results show that 3% strain was the optimum for use in the decellularized tendon scaffold. Higher strains of up to 5% began to lower mRNA expression of collagen type I and II genes and also led to an ultimate decrease in tensile strength that was significantly lower than the 3% strain group. Additionally, recent evidence suggests that shorter intermittent durations can lead to more tendon like qualities because they avoid habituation of signaling pathways [82]. Mechanical stimulation is hypothesized to activate the ERK1/2 signaling pathway within cells which in turn promotes collagen deposition and ECM remodeling. Paxton's group found that ERK1/2 phosphorylation fell off sharply after 10 minutes of stimulation and that neither frequency nor force had any effect on ERK1/2 activity. In a ligament model using mature fibroblasts, the ideal regimen was found to be 10 minutes every 6 hours at 0.5 Hz with no significant differences observed between 2.5%, 5% and 10% strain. The absence of a strain effect is likely due to mature fibroblasts being able to withstand greater strains than progenitor cells. The discovered refractory period could lead to a new paradigm of mechanical regimens that will greatly improve future results.

Cellular habituation to stimuli is a well-documented phenomenon in which cells stop responding to a stimulus that is repeated or maintained for too long [83-88]. The

majority of the investigation into cellular habituation has been conducted on plant cells, and what work has been done on mammalian lines is predominately conducted in neurons. But, as the work above by Paxton illustrates, other mammalian lines exhibit habituative behavior to extended stimuli. And while ligament fibroblasts are extremely similar to tenocytes, many differences have already been pointed out.

I have hypothesized that breaking the mechanostimulation regimen up into short time frames will significantly increase the tendon-like phenotype of a tissue engineered scaffold. While cellular differentiation pathways are not well understood, whatever pathways are being activated by mechanical stimulation likely behave similar to ERK and other documented cell responses, and stop activating after short periods. These short stimulation periods, followed by frequent resting periods will allow cellular pathways to overcome any refractory periods to achieve a scaffold more suitable for patient implantation.

For analysis, cell numbers will be collected to determine viability of culture methods utilizing a dsDNA assay. Gene expression will be examined using the $2^{-\Delta\Delta Ct}$ method of comparing experimental genes to the housekeeping gene GAPDH. Several ECM genes will be examined to determine if matrix is being deposited, as well as multiple tendon specific genes. Lastly, several genes representative of undesirable cell lines will be examined to verify the absence of those lines. These are labeled as such in Table 2. The ultimate tensile strength of our constructs will also be collected for comparison to native tendons.

4.3 Materials and Methods

4.3.1 Scaffold Preparation

Discarded human umbilical cords were obtained from Norman Regional Hospital (Norman, OK) with approval by the local Institutional Review Board. The human umbilical vein (HUV) was then extracted from the cord using a computerized lathe. The whole umbilical cord is mounted on a steel mandrel and frozen overnight at -80°C. The frozen tissue and mandrel is then inserted in a computerized lathe which removes the extraneous Wharton's Jelly and leaves a diameter of 6.75 ± 0.25mm and a wall thickness of 0.75 mm. Samples were then cut to 6.5cm for bioreactor insertion.

After extraction, the HUV was inverted so that lumen of the vein was on the exterior for superior cell attachment. The inverted HUV is then washed in 1% sodium dodecyl sulfate (JT Baker, Center Valley, PA) for 24 hours to begin the decellularization process. Followed by DI water washes of 10 min, 20 min, 30 min and 24 hours and then a 24 hr wash in 70% EtOH to remove any remaining SDS in the HUV interior. This is followed by 10 min, 20 min and 30 min of water washes and then a 2 hr wash in 0.2% per-acetic acid (Sigma Aldrich, St. Louis, MO). Post-acid wash the HUVs were washed in 10 min, 20 min, 30 min and overnight DI water washes to remove residual acid from the cords before finally undergoing a 24 wash in phosphate buffer of 7.2 – 7.4 pH. Cords were then stored for no longer than 1 week at 4°C before bioreactor insertion.

4.3.2 Cells

Bone marrow MSCs were utilized for all experiments. Male Wistar rats of 175 – 199 g in mass were obtained from Envigo and processed using previously established

protocols approved by the local IACUC board. Rats were asphyxiated one at a time by filling a sealed chamber with CO_2 at a rate of 10% of the chamber volume per minute. Between each rat, the chamber was purged of excess CO_2 to prevent the animals from becoming frightened and to prevent early asphyxiation. After death is confirmed, each rat is shaved from mid-body down and submerged in 95% EtOH for ~10 min for sterilization. The rats were then placed into a surgical area and the surgery site is scrubbed with Triadine™ and 95% ethanol to ensure sterilization. After isolating the surgical site, the skin is split from hip to ankle to allow access to the femur and tibia which are resected and cleaned of any connective tissue and muscle before being rinsed with serum-free α-mem. Rinsed bones are cut open and an 18-guage needle is inserted into the marrow cavity. Using ~5 mL of α-MEM, the marrow is flushed from the bone and collected in a conical vial. Marrow collected from all bones was then homogenized and distributed between T-75 cell culture flasks. Media volume within the flasks is then brought up to 10 mL and the flasks are cultured in a humidified incubator at 37°C and 5% CO2. 5 days post-extraction, the media was removed from the flasks and the cells were rinsed with phosphate buffered saline (PBS) before having fresh media added. This rinse is to remove any non-adherent cells in the flasks such as hematopoietic stem cells and erythrocytes. The remaining adherent are passage zero rat MSCs. Passage 2 cells were utilized for all experiments.

4.3.3 Experimental Design

To prepare the tissue constructs for bioreactor insertion, MSCs were mixed with 2 mg/mL of collagen type I at a density of 1 million cells/mL following manufacturer instructions for a collagen hydrogel. 0.6 mL of this cell/collagen mixture was then

injected into the HUV interior and sealed at both ends with custom stainless steel adapter which are clamped 5 mm from the ends with 3 mm zip ties. The constructs were then placed in supplemented α-MEM and incubated at 37°C for 2 hours to allow for collagen cross-linking. After the cross-linking, constructs were placed into the bioreactor using custom hooks and attached to a uniaxial motor. These constructs are cultured for 7 or 14 days for various durations.

Mechanical stimulation was applied daily to the constructs following the groups described in Table 1: List of experimental groups

All experimental groups experience a total of 1hr/day of stimulation at 2% strain and 0.017 Hz with varying rest periodsTable 1. All groups are subject to 2% strain at 0.017 Hz and the stimulation intervals add up to 1 hour total of stimulation per day with differing rest periods. All samples were held at a calibrated 1% strain during rest periods [69]. The control was a group subject to the resting 1% strain but no dynamic stimulation. Post-culture the constructs are removed and prepped for specific analyses.

Stimulation Time (min)	Times/Day	Strain	Frequency (Hz)
60	1	2%	0.017
30	2	2%	0.017
15	4	2%	0.017
10	6	2%	0.017
5	12	2%	0.017

Table 1: List of experimental groups
All experimental groups experience a total of 1hr/day of stimulation at 2% strain and 0.017 Hz with varying rest periods.

4.3.4 Mechanical Analysis

A uniaxial tensile testing frame (Untied Testing Systems, model SSTM-2K, Flint, MI) was used for mechanical testing. Whole, cylindrical, wet constructs were utilized for analysis. Samples were preconditioned for 5 cycles to remove hysteresis and then underwent analysis at 1%/sec until failure. Displacement and force was recorded by companion software and used to calculate stress, strain and elastic modulus for each construct. To avoid end effects of the samples and clamps used, only samples that fail away from the end regions will be included in analysis. Samples for mechanical analysis are separate from other analysis methods.

4.3.5 Cell Proliferation

Using a separate construct, a 0.5 cm section was removed from the top, middle and bottom of the construct. These samples underwent incubation overnight in 300 U/mL of collagenase type I in PBS to facilitate ECM break down. Samples were then sonicated for 15 seconds and frozen at -20°C. Samples were then thawed and refrozen 2 more times to facilitate further cell lysation and release of DNA content into solution. The resulting solution was analyzed utilizing a Quant-iT™ PicoGreen dsDNA Assay kit (Life Technologies) to assess the solution's fluorescence at 480/520 nm excitation/emission wavelengths. The resulting DNA concentration was then converted to a cell number using a pre-measured DNA content per cell of 7 pg/cell.

4.3.6 Histology

For histological staining, 0.5 cm sections were fixed in 10% formalin (Azer Scientific, Morgantown, PA) and embedded in paraffin (VWR, Radnor, PA). These

samples were then sectioned into 8 μm sections utilizing a microtome and the resulting ribbon is mounted onto a microscope slide. These slides can then be stained with hematoxylin and eosin to observe ECM orientation, cell penetration and cellular shape. Axial sections of the construct were examined using the FibrilTool plugin for the ImageJ software suite to determine fiber alignment in terms of anisotropy which returns a weighted ratio of alignment [89]. Cross sectional slides were examined to measure the distance cells have penetrated into the scaffold and to assess cellular shape, as tenocytes should appear as elongated narrow cells.

4.3.7 Gene Expression

Gene expression was measured utilizing real time polymerase chain reaction (RT-PCR). Construct sections are stored in RNA Later solution prior to use. Sections were then cut into pieces and then homogenized utilizing a Ten Broeck tissue grinder (Wheaton, Millville, NJ) and Trizol reagent (Life Technologies). The mRNA can then be isolated from the homogenized Trizol solution per the manufacturer's instructions. To remove excess DNA, the RNA solution is treated with DNase (Life Technologies, Grand Island, NY) prior to reverse transcription. Reverse transcription to DNA was performed utilizing a RNA-to-cDNA kit (Life Technologies) and Mastercycler ep realplex4 (Eppendorf, Hauppauge, NY). The resulting DNA was then amplified utilizing SYBR Green PCR Master Mix (Life Technologies) and specific genes are detected utilizing the primers listed in Table 2 [90-97]. Genes in the various experimental groups can then be normalized utilizing the housekeeping gene, glyceraldehyde 3-phosphate dehydrogenase (GAPDH), and comparison between controls and the experimental groups was done utilizing the 2-ΔΔCt method of

comparing experimental gene targets to the GAPDH housekeeping gene (ΔCt) and then comparing that change to a control (ΔΔCt) [98].

4.4 Sterility Verification

Unfortunately, a contamination was encountered during bioreactor setup that required the disposal of several data groups and the source was not easily identified. After the first infection, cell cultures were verified to be infection free and all instruments and work stations were sterilized or if unable to be fully sterilized, cleaned with bleach and 95% ethanol. Unfortunately repeat infections occurred. Possible causes included summer humidity, faulty sterilization, contaminated stock solutions, etc. which I investigated.

4.4.1 HUV Testing

The HUV is a primary tissue that when first acquired is not sterile and is assumed to be highly contaminated. This was my first instinct as to the source of the infection. I sterilized a batch of HUVs normally using the above protocol and then washed them in cell culture medium and placed them with the media into T-75 culture flasks for 7 days to look for growths. Additionally, I took some of these sterilized HUVs and inserted the stainless steel adapters as if they were being inserted into bioreactors. I then rinsed them with culture medium and placed them into T-75 cell culture flasks for 7 days to look for growths.

		Forward Primer (5' to 3')	Reverse Primer (5' to 3')
Housekeeping	GAPDH	CCATTCTTCCACCTTTGATGCT	TGTTGCTGTAGCCATATTCATTGT
ECM	Biglycan	CTGAGGGAACTTCACTTGGA	CAGATAGACAACCTGGAGGAG
	Decorin	TGGCAGTCTGGCTAATGT	ACTCACGGCAGTGTAGGA
	COMP	GTTTCCCGGACGAGAAGCCTT	ATCCTCCTGCCCTGAATTGG
	Collagen I	ATCAGCCCAAACCCCAAGGAGA	CGCAGGAAGGTCAGCTGGATAG
	Collagen III	AGGCTTTGATGGACGCAATG	GCGGCTCCAGGAAGACC
	MMP-3	TCCCAGGAAAATAGCTGAGAACTT	GAAACCCAAATGCTTCAAAGACA
	Tropoelastin	TAAATACGGAGCAGCAGGTG	GCACCATATTTGGCAGCCTTAG
Tendon Genes	Scleraxis	CGAAGTTAGAAGGAGGAGGGT	CGCTCAGATCAGGTCCAAAG
	Tenascin C	GCTACTCCAGACGGTTTC	TTCCACGGCTTATTCCAT
	Tenomodulin	GGACTTTGAGGAGGATGG	CGCTTGCTTGTCTGGTGC
Undesirable Lineages	PPARG	CGGTTGATTTCTCCAGCATT	AGCAAGGCACTTCTGAAACC
	Osterix	CTTTCCCCACTCATTTCCTG	CTAGGCAGGCAGTCAGAAG
	Collagen II	CTCCAGGTGTGAAGGGTGAG	GAACCTTGAGCACCTTCAGG

Table 2: List of Genes for RT-PCR

4.4.2 Chemical Testing

Any chemical used in cell culture at any point was tested for contamination. Culture medium used in experiments, was placed in culture flasks for 7 days. 4 mL of PBS, 4 mL of NaOH stock, and 4 mL of phosphate buffer used to store HUVs were all mixed with 6 mL of sterile culture medium. Lastly, 1 mL of 3 mg/mL collagen type I was mixed with 9 mL of culture medium. All groups were allowed to incubate for 7 days and checked for growths.

4.4.3 Sterilization Verification

To verify that my equipment was indeed being properly sterilized, a bioreactor was setup following the above protocol with one amendment. The cell injection procedure discussed in section 4.3.3 Experimental Design was left out.

4.4.4 Results

The collagen cultures revealed significant visible fungal and bacterial growth after 7 days of culture. All other groups showed no detectable living cells. All experiments I had previously run using the collagen stock had to be thrown out as the results could not be verified until a new collagen stock was obtained.

References

[1] P. P. Y. Lui, Y. F. Rui, M. Ni, and K. M. Chan, "Tenogenic differentiation of stem cells for tendon repair - what is the current evidence?," *Journal of Tissue Engineering and Regenerative Medicine,* vol. 5, pp. E144-E163, Aug 2011.

[2] S. F. Tellado, E. R. Balmayor, and M. Van Griensven, "Strategies to engineer tendon/ligament-to-bone interface: Biomaterials, cells and growth factors," *Advanced Drug Delivery Reviews,* vol. 94, pp. 126-140, Nov 1 2015.

[3] C. K. Kuo and R. S. Tuan, "Mechanoactive Tenogenic Differentiation of Human Mesenchymal Stem Cells," *Tissue Engineering Part A,* vol. 14, pp. 1615-1627, Oct 2008.

[4] M. Govoni, C. Muscari, J. Lovecchio, C. Guarnieri, and E. Giordano, "Mechanical Actuation Systems for the Phenotype Commitment of Stem Cell-Based Tendon and Ligament Tissue Substitutes," *Stem Cell Reviews and Reports,* vol. 12, pp. 189-201, Apr 2016.

[5] S. E. Szczesny and D. M. Elliott, "Interfibrillar shear stress is the loading mechanism of collagen fibrils in tendon," *Acta Biomaterialia,* vol. 10, pp. 2582-2590, Jun 2014.

[6] N. Datta, Q. P. Pham, U. Sharma, V. I. Sikavitsas, J. A. Jansen, and A. G. Mikos, "In vitro Generated Extracellular Matrix and Fluid Shear Stress Synergistically Enhance 3D Osteoblastic Differentiation," *Proceedings of the National Academy of Sciences of the United States of America,* vol. 103, pp. 2488-2493, 2006.

[7] J. Pan, T. Wang, L. Wang, W. Chen, and M. Song, "Cyclic strain-induced cytoskeletal rearrangement of human periodontal ligament cells via the Rho signaling pathway," *PloS one,* vol. 9, p. e91580, 2014.

[8] K.-I. Lee, J.-S. Lee, J.-G. Kim, K.-T. Kang, J.-W. Jang, Y.-B. Shim*, et al.*, "Mechanical properties of decellularized tendon cultured by cyclic straining bioreactor," *Journal of Biomedical Materials Research Part A,* vol. 101, pp. 3152-3158, Nov 2013.

[9] Y. Xu, S. Dong, Q. Zhou, X. Mo, L. Song, T. Hou*, et al.*, "The effect of mechanical stimulation on the maturation of TDSCs-poly(L-lactide-co-e-caprolactone)/collagen scaffold constructs for tendon tissue engineering," *Biomaterials,* vol. 35, pp. 2760-2772, Mar 2014.

[10] J. Zhang and J. H. C. Wang, "Mechanobiological Response of Tendon Stem Cells: Implications of Tendon Homeostasis and Pathogenesis of Tendinopathy," *Journal of Orthopaedic Research,* vol. 28, pp. 639-643, May 2010.

[11] I. K. Angelidis, J. Thorfinn, I. D. Connolly, D. Lindsey, H. M. Pham, and J. Chang, "Tissue Engineering of Flexor Tendons: The Effect of a Tissue Bioreactor on Adipoderived Stem Cell-Seeded and Fibroblast-Seeded Tendon Constructs," *Journal of Hand Surgery-American Volume,* vol. 35A, pp. 1466-1472, Sep 2010.

[12] A. I. Goncalves, M. T. Rodrigues, P. P. Carvalho, M. Banobre-Lopez, E. Paz, P. Freitas*, et al.*, "Exploring the Potential of Starch/Polycaprolactone Aligned Magnetic Responsive Scaffolds for Tendon Regeneration," *Advanced Healthcare Materials,* vol. 5, pp. 213-222, Jan 2016.

[13] X. Chen, Z. Yin, J.-l. Chen, W.-l. Shen, H.-h. Liu, Q.-m. Tang*, et al.*, "Force and scleraxis synergistically promote the commitment of human ES cells derived MSCs to tenocytes," *Scientific Reports,* vol. 2, Dec 14 2012.

[14] C.-F. Hsieh, P. Alberton, E. Loffredo-Verde, E. Volkmer, M. Pietschmann, P. Mueller*, et al.*, "Scaffold-free Scleraxis-programmed tendon progenitors aid in significantly enhanced repair of full-size Achilles tendon rupture," *Nanomedicine,* vol. 11, pp. 1153-1167, 2016 2016.

[15] G. Pelled, J. G. Snedeker, A. Ben-Arav, S. Rigozzi, Y. Zilberman, N. Kimelman-Bleich*, et al.*, "Smad8/BMP2-engineered mesenchymal stem cells induce accelerated recovery of the biomechanical properties of the achilles tendon," *Journal of Orthopaedic Research,* vol. 30, pp. 1932-1939, Dec 2012.

[16] A. Hoffmann, G. Pelled, G. Turgeman, P. Eberle, Y. Zilberman, H. Shinar*, et al.*, "Neotendon formation induced by manipulation of the Smad8 signalling pathway in mesenchymal stem cells," *Journal of Clinical Investigation,* vol. 116, pp. 940-952, Apr 2006.

[17] M.-J. Guerquin, B. Charvet, G. Nourissat, E. Havis, O. Ronsin, M.-A. Bonnin*, et al.*, "Transcription factor EGR1 directs tendon differentiation and promotes tendon repair," *Journal of Clinical Investigation,* vol. 123, pp. 3564-3576, Aug 2013.

[18] A. Scott, A. Sampaio, T. Abraham, C. Duronio, and T. M. Underhill, "Scleraxis expression is coordinately regulated in a murine model of patellar tendon injury," *Journal of orthopaedic research : official publication of the Orthopaedic Research Society,* vol. 29, p. 289, 2011.

[19] J. Massague, "The Transforming Growth Factor-beta Family," *Annual Review of Cell Biology,* vol. 6, pp. 597-641, 1990 1990.

[20] L. N. Lawton, M. d. F. Bonaldo, P. C. Jelenc, L. Qiu, S. A. Baumes, R. A. Marcelino*, et al.*, "Identification of a novel member of the TGF-beta superfamily highly expressed in human placenta," *Gene,* vol. 203, pp. 17-26, December 5, 1997 1997.

[21] M. B. Sporn, A. B. Roberts, L. M. Wakefield, and R. K. Assoian, "Transforming growth factor-beta: biological function and chemical structure," *Science,* vol. 233, pp. 532-534, 1986/08/01 1986.

[22] K.-M. Chan, S.-C. Fu, Y.-P. Wong, W.-C. Hui, Y.-C. Cheuk, and M. W.-N. Wong, "Expression of transforming growth factor β isoforms and their roles in tendon healing," *Wound Repair and Regeneration,* vol. 16, pp. 399-407, 05/2008 2008.

[23] Z. Kapacee, C.-Y. C. Yeung, Y. Lu, D. Crabtree, D. F. Holmes, and K. E. Kadler, "Synthesis of embryonic tendon-like tissue by human marrow stromal/mesenchymal stem cells requires a three-dimensional environment and transforming growth factor β3," *Matrix Biology: Journal of the International Society for Matrix Biology,* vol. 29, pp. 668-677, Oct 2010 2010.

[24] P. O. Bagnaninchi, Y. Yang, A. J. E. Haj, and N. Maffulli, "Tissue engineering for tendon repair," *British Journal of Sports Medicine,* vol. 41, pp. e1-e5, 2007-8 2007.

[25] N. M. Wolfman, G. Hattersley, K. Cox, A. J. Celeste, R. Nelson, N. Yamaji*, et al.*, "Ectopic induction of tendon and ligament in rats by growth and

differentiation factors 5, 6, and 7, members of the TGF-beta gene family," *The Journal of Clinical Investigation,* vol. 100, pp. 321-330, Jul 15, 1997 1997.

[26] B. Mikic, R. Entwistle, K. Rossmeier, and L. Bierwert, "Effect of GDF-7 deficiency on tail tendon phenotype in mice," *Journal of Orthopaedic Research: Official Publication of the Orthopaedic Research Society,* vol. 26, pp. 834-839, Jun 2008 2008.

[27] B. Mikic, B. J. Schalet, R. T. Clark, V. Gaschen, and E. B. Hunziker, "GDF-5 deficiency in mice alters the ultrastructure, mechanical properties and composition of the Achilles tendon," *Journal of Orthopaedic Research: Official Publication of the Orthopaedic Research Society,* vol. 19, pp. 365-371, May 2001 2001.

[28] B. Mikic, K. Rossmeier, and L. Bierwert, "Identification of a tendon phenotype in GDF6 deficient mice," *Anatomical Record (Hoboken, N.J.: 2007),* vol. 292, pp. 396-400, Mar 2009 2009.

[29] R. James, G. Kesturu, G. Balian, and A. B. Chhabra, "Tendon: Biology, Biomechanics, Repair, Growth Factors, and Evolving Treatment Options," *The Journal of Hand Surgery,* vol. 33, pp. 102-112, January 2008 2008.

[30] M. Hayashi, C. Zhao, K.-N. An, and P. C. Amadio, "The effects of growth and differentiation factor 5 on bone marrow stromal cell transplants in an in vitro tendon healing model," *The Journal of Hand Surgery, European Volume,* vol. 36, pp. 271-279, May 2011 2011.

[31] B. C. Toolan, P. Bolt, A. N. Clerk, H. H. Luu, Q. Kang, J. L. Kummer*, et al.*, "BMP-14 Gene Therapy Increases Tendon Tensile Strength in a Rat Model of Achilles Tendon Injury," *J Bone Joint Surg Am,* vol. 90, pp. 445-446, 2008/02/01 2008.

[32] J. M. G. T. Jenner, F. van Eijk, D. B. F. Saris, W. J. Willems, W. J. A. Dhert, and L. B. Creemers, "Effect of transforming growth factor-beta and growth differentiation factor-5 on proliferation and matrix production by human bone marrow stromal cells cultured on braided poly lactic-co-glycolic acid scaffolds for ligament tissue engineering," *Tissue Engineering,* vol. 13, pp. 1573-1582, Jul 2007 2007.

[33] Y. Ozasa, A. Gingery, A. R. Thoreson, K.-N. An, C. Zhao, and P. C. Amadio, "A comparative study of the effects of growth and differentiation factor 5 on muscle-derived stem cells and bone marrow stromal cells in an in vitro tendon healing model," *The Journal of Hand Surgery,* vol. 39, pp. 1706-1713, Sep 2014 2014.

[34] K. Vuornos, M. Björninen, E. Talvitie, K. Paakinaho, M. Kellomäki, H. Huhtala*, et al.*, "Human Adipose Stem Cells Differentiated on Braided Polylactide Scaffolds Is a Potential Approach for Tendon Tissue Engineering," *Tissue Engineering. Part A,* vol. 22, pp. 513-523, Mar 2016 2016.

[35] R. James, S. G. Kumbar, C. T. Laurencin, G. Balian, and A. B. Chhabra, "Tendon tissue engineering: adipose-derived stem cell and GDF-5 mediated regeneration using electrospun matrix systems," *Biomedical Materials (Bristol, England),* vol. 6, p. 025011, Apr 2011 2011.

[36] L. V. Gulotta, D. Kovacevic, J. D. Packer, J. R. Ehteshami, and S. A. Rodeo, "Adenoviral-mediated gene transfer of human bone morphogenetic protein-13

does not improve rotator cuff healing in a rat model," *The American Journal of Sports Medicine,* vol. 39, pp. 180-187, Jan 2011 2011.

[37] J. Y. Lee, Z. Zhou, P. J. Taub, M. Ramcharan, Y. Li, T. Akinbiyi*, et al.*, "BMP-12 treatment of adult mesenchymal stem cells in vitro augments tendon-like tissue formation and defect repair in vivo," *PloS One,* vol. 6, p. e17531, 2011 2011.

[38] V. Kishore, W. Bullock, X. Sun, W. S. Van Dyke, and O. Akkus, "Tenogenic differentiation of human MSCs induced by the topography of electrochemically aligned collagen threads," *Biomaterials,* vol. 33, pp. 2137-2144, Mar 2012 2012.

[39] G. Yang, B. B. Rothrauff, and R. S. Tuan, "Tendon and Ligament Regeneration and Repair: Clinical Relevance and Developmental Paradigm," *Birth defects research. Part C, Embryo today : reviews,* vol. 99, pp. 203-222, 2013-9 2013.

[40] L. E. Stein, "Effects of serum, fibroblast growth factor, and platelet-derived growth factor on explants of rat tail tendon: a morphological study," *Acta Anatomica,* vol. 123, pp. 247-252, 1985 1985.

[41] S. D. Subramony, A. Su, K. Yeager, and H. H. Lu, "Combined effects of chemical priming and mechanical stimulation on mesenchymal stem cell differentiation on nanofiber scaffolds," *Journal of Biomechanics,* vol. 47, pp. 2189-2196, June 27, 2014 2014.

[42] S. Sahoo, L.-T. Ang, J. Cho-Hong Goh, and S.-L. Toh, "Bioactive nanofibers for fibroblastic differentiation of mesenchymal precursor cells for ligament/tendon tissue engineering applications," *Differentiation; Research in Biological Diversity,* vol. 79, pp. 102-110, Feb 2010 2010.

[43] S. Sahoo, S. L. Toh, and J. C. H. Goh, "A bFGF-releasing silk/PLGA-based biohybrid scaffold for ligament/tendon tissue engineering using mesenchymal progenitor cells," *Biomaterials,* vol. 31, pp. 2990-2998, Apr 2010 2010.

[44] F. A. Petrigliano, C. S. English, D. Barba, S. Esmende, B. M. Wu, and D. R. Mcallister, "The Effects of Local bFGF Release and Uniaxial Strain on Cellular Adaptation and Gene Expression in a 3D Environment: Implications for Ligament Tissue Engineering," *Tissue Engineering,* vol. 13, pp. 2721-2731, August 29, 2007 2007.

[45] S. Hankemeier, M. Keus, J. Zeichen, M. Jagodzinski, T. Barkhausen, U. Bosch*, et al.*, "Modulation of Proliferation and Differentiation of Human Bone Marrow Stromal Cells by Fibroblast Growth Factor 2: Potential Implications for Tissue Engineering of Tendons and Ligaments," *Tissue Engineering,* vol. 11, pp. 41-49, January 1, 2005 2005.

[46] J. E. Moreau, D. S. Bramono, R. L. Horan, D. L. Kaplan, and G. H. Altman, "Sequential biochemical and mechanical stimulation in the development of tissue-engineered ligaments," *Tissue Engineering. Part A,* vol. 14, pp. 1161-1172, Jul 2008 2008.

[47] J. Moreau, J. Chen, D. Kaplan, and G. Altman, "Sequential Growth Factor Stimulation of Bone Marrow Stromal Cells in Extended Culture," *Tissue Engineering,* vol. 12, pp. 2905-2912, October 1, 2006 2006.

[48] Y. W. Qiu, X. Wang, Y. N. Zhang, A. J. Carr, L. W. Zhu, Z. D. Xia*, et al.*, "In vitro two-dimensional and three-dimensional tenocyte culture for tendon tissue

engineering," *Journal of Tissue Engineering and Regenerative Medicine,* vol. 10, pp. E216-E226, Mar 2016.

[49] T. I. Wodewotzky, J. F. Lima-Neto, O. C. M. Pereira-Júnior, M. J. Sudano, S. a. F. Lima, P. R. O. Bersano*, et al.*, "In vitro cultivation of canine multipotent mesenchymal stromal cells on collagen membranes treated with hyaluronic acid for cell therapy and tissue regeneration," *Brazilian Journal of Medical and Biological Research = Revista Brasileira De Pesquisas Médicas E Biológicas / Sociedade Brasileira De Biofísica ... [et Al.],* vol. 45, pp. 1157-1162, Dec 2012 2012.

[50] B. P. Chan, K. M. Chan, N. Maffulli, S. Webb, and K. K. Lee, "Effect of basic fibroblast growth factor. An in vitro study of tendon healing," *Clinical Orthopaedics and Related Research,* pp. 239-247, Sep 1997 1997.

[51] E. A. DesRosiers, L. Yahia, and C. H. Rivard, "Proliferative and matrix synthesis response of canine anterior cruciate ligament fibroblasts submitted to combined growth factors," *Journal of Orthopaedic Research: Official Publication of the Orthopaedic Research Society,* vol. 14, pp. 200-208, Mar 1996 1996.

[52] R. A. Hortensius and B. A. C. Harley, "The use of bioinspired alterations in the glycosaminoglycan content of collagen–GAG scaffolds to regulate cell activity," *Biomaterials,* vol. 34, pp. 7645-7652, October 2013 2013.

[53] D. J. Murphy and A. J. Nixon, "Biochemical and site-specific effects of insulin-like growth factor I on intrinsic tenocyte activity in equine flexor tendons," *American Journal of Veterinary Research,* vol. 58, pp. 103-109, Jan 1997 1997.

[54] S. R. Caliari and B. A. C. Harley, "The effect of anisotropic collagen-GAG scaffolds and growth factor supplementation on tendon cell recruitment, alignment, and metabolic activity," *Biomaterials,* vol. 32, pp. 5330-5340, Aug 2011 2011.

[55] S. Sahoo, J. G. Cho-Hong, and T. Siew-Lok, "Development of hybrid polymer scaffolds for potential applications in ligament and tendon tissue engineering," *Biomedical Materials (Bristol, England),* vol. 2, pp. 169-173, Sep 2007 2007.

[56] H. Liu, H. Fan, Y. Wang, S. L. Toh, and J. C. H. Goh, "The interaction between a combined knitted silk scaffold and microporous silk sponge with human mesenchymal stem cells for ligament tissue engineering," *Biomaterials,* vol. 29, pp. 662-674, February 2008 2008.

[57] Y.-K. Seo, J.-H. Kim, and S.-R. Eo, "Co-effect of silk and amniotic membrane for tendon repair," *Journal of Biomaterials Science. Polymer Edition,* pp. 1-28, May 17, 2016 2016.

[58] S. K. Czaplewski, T.-L. Tsai, S. E. Duenwald-Kuehl, R. Vanderby Jr., and W.-J. Li, "Tenogenic differentiation of human induced pluripotent stem cell-derived mesenchymal stem cells dictated by properties of braided submicron fibrous scaffolds," *Biomaterials,* vol. 35, pp. 6907-6917, August 2014 2014.

[59] V. Godot, M. Arock, G. Garcia, F. Capel, C. Flys, M. Dy*, et al.*, "H4 histamine receptor mediates optimal migration of mast cell precursors to CXCL12," *Journal of Allergy and Clinical Immunology,* vol. 120, pp. 827-834, October 2007 2007.

[60] K. Hattori, B. Heissig, K. Tashiro, T. Honjo, M. Tateno, J.-H. Shieh*, et al.*, "Plasma elevation of stromal cell–derived factor-1 induces mobilization of mature and immature hematopoietic progenitor and stem cells," *Blood,* vol. 97, pp. 3354-3360, 2001/06/01 2001.
[61] W. Shen, X. Chen, J. Chen, Z. Yin, B. C. Heng, W. Chen*, et al.*, "The effect of incorporation of exogenous stromal cell-derived factor-1 alpha within a knitted silk-collagen sponge scaffold on tendon regeneration," *Biomaterials,* vol. 31, pp. 7239-7249, Oct 2010 2010.
[62] S. R. Caliari and B. A. C. Harley, "Composite growth factor supplementation strategies to enhance tenocyte bioactivity in aligned collagen-GAG scaffolds," *Tissue Engineering. Part A,* vol. 19, pp. 1100-1112, May 2013 2013.
[63] S. R. Caliari and B. A. C. Harley, "Structural and biochemical modification of a collagen scaffold to selectively enhance MSC tenogenic, chondrogenic, and osteogenic differentiation," *Advanced Healthcare Materials,* vol. 3, pp. 1086-1096, Jul 2014 2014.
[64] D. S. Musson, D. Naot, A. Chhana, B. G. Matthews, J. D. McIntosh, S. T. C. Lin*, et al.*, "In vitro evaluation of a novel non-mulberry silk scaffold for use in tendon regeneration," *Tissue Engineering. Part A,* vol. 21, pp. 1539-1551, May 2015 2015.
[65] Z. Yin, X. Chen, J. L. Chen, W. L. Shen, T. M. H. Nguyen, L. Gao*, et al.*, "The regulation of tendon stem cell differentiation by the alignment of nanofibers," *Biomaterials,* vol. 31, pp. 2163-2175, Mar 2010.
[66] J. L. Chen, W. Zhang, Z. Y. Liu, B. C. Heng, H. W. Ouyang, and X. S. Dai, "Physical regulation of stem cells differentiation into teno-lineage: current strategies and future direction," *Cell and Tissue Research,* vol. 360, pp. 195-207, May 2015.
[67] L. C. Mozdzen, S. D. Thorpe, H. R. C. Screen, and B. A. C. Harley, "The Effect of Gradations in Mineral Content, Matrix Alignment, and Applied Strain on Human Mesenchymal Stem Cell Morphology within Collagen Biomaterials," *Advanced Healthcare Materials,* vol. 5, pp. 1731-1739, Jul 2016.
[68] A. English, A. Azeem, K. Spanoudes, E. Jones, B. Tripathi, N. Basu*, et al.*, "Substrate topography: A valuable in vitro tool, but a clinical red herring for in vivo tenogenesis," *Acta Biomaterialia,* vol. 27, pp. 3-12, Nov 2015.
[69] R. I. Issa, B. Engebretson, L. Rustom, P. S. McFetridge, and V. I. Sikavitsas, "The Effect of Cell Seeding Density on the Cellular and Mechanical Properties of a Mechanostimulated Tissue-Engineered Tendon," *Tissue Engineering Part A,* vol. 17, pp. 1479-87, Jun 2011
2014-04-03 2011.
[70] J. Zhang and J. H. C. Wang, "Human Tendon Stem Cells Better Maintain Their Stemness in Hypoxic Culture Conditions," *Plos One,* vol. 8, Apr 16 2013.
[71] M. B. Fauzi, Y. Lokanathan, B. S. Aminuddin, B. H. I. Ruszymah, and S. R. Chowdhury, "Ovine tendon collagen: Extraction, characterisation and fabrication of thin films for tissue engineering applications," *Materials Science & Engineering C-Materials for Biological Applications,* vol. 68, pp. 163-171, Nov 2016.

[72] S. A. Muller, L. Durselen, P. Heisterbach, C. Evans, and M. Majewski, "Effect of a Simple Collagen Type I Sponge for Achilles Tendon Repair in a Rat Model," *American Journal of Sports Medicine,* vol. 44, pp. 1998-2004, Aug 2016.

[73] M. U. Wagenhauser, M. F. Pietschmann, D. Docheva, M. F. Gulecyuz, V. Jansson, and P. E. Muller, "Assessment of essential characteristics of two different scaffolds for tendon in situ regeneration," *Knee Surgery Sports Traumatology Arthroscopy,* vol. 23, pp. 1239-1246, Apr 2015.

[74] J. C. Price, P. Roach, and A. J. El Haj, "Liquid Crystalline Ordered Collagen Substrates for Applications in Tissue Engineering," *Acs Biomaterials Science & Engineering,* vol. 2, pp. 625-633, Apr 2016.

[75] M. Sandri, G. Filardo, E. Kon, S. Panseri, M. Montesi, M. Iafisco*, et al.*, "Fabrication and pilot in vivo study of a Collagen-BDDGE-elastin core-shell scaffold for tendon regeneration," *Frontiers in Bioengineering and Biotechnology,* vol. 4, p. 52, 2016.

[76] Y. Wu, Z. Y. Wang, J. Y. H. Fuh, Y. S. Wong, W. Wang, and E. S. Thian, "Mechanically-enhanced three-dimensional scaffold with anisotropic morphology for tendon regeneration," *Journal of Materials Science-Materials in Medicine,* vol. 27, p. 10, Jul 2016.

[77] W. Y. Liu, J. Lipner, C. H. Moran, L. Z. Feng, X. Y. Li, S. Thomopoulos*, et al.*, "Generation of Electrospun Nanofibers with Controllable Degrees of Crimping Through a Simple, Plasticizer-Based Treatment," *Advanced Materials,* vol. 27, pp. 2583-2588, Apr 2015.

[78] H. M. Pauly, D. J. Kelly, K. C. Popat, N. A. Trujillo, N. J. Dunne, H. O. McCarthy*, et al.*, "Mechanical properties and cellular response of novel electrospun nanofibers for ligament tissue engineering: Effects of orientation and geometry," *Journal of the mechanical behavior of biomedical materials,* vol. 61, pp. 258-270, 2016.

[79] G. Yang, H. Lin, B. B. Rothrauff, S. Yu, and R. S. Tuan, "Multilayered polycaprolactone/gelatin fiber-hydrogel composite for tendon tissue engineering," *Acta biomaterialia,* vol. 35, pp. 68-76, 2016.

[80] S. B. Orr, A. Chainani, K. J. Hippensteel, A. Kishan, C. Gilchrist, N. W. Garrigues*, et al.*, "Aligned multilayered electrospun scaffolds for rotator cuff tendon tissue engineering," *Acta Biomaterialia,* vol. 24, pp. 117-126, 2015.

[81] D. W. Youngstrom, I. Rajpar, D. L. Kaplan, and J. G. Barrett, "A Bioreactor System for In Vitro Tendon Differentiation and Tendon Tissue Engineering," *Journal of Orthopaedic Research,* vol. 33, pp. 911-918, Jun 2015.

[82] J. Paxton, P. Hagerty, J. Andrick, and K. Baar, "Optimizing an Intermittent Stretch Paradigm Using ERK1/2 Phosphorylation Results in Increased Collagen Synthesis in Engineered Ligaments," *Tissue Engineering Part A,* vol. 18, pp. 277-84, 2012.

[83] M. de Castro, A. Largo-Gosens, J. M. Alvarez, P. García-Angulo, and J. L. Acebes, "Early cell-wall modifications of maize cell cultures during habituation to dichlobenil," *Journal of plant physiology,* vol. 171, pp. 127-135, 2014.

[84] A. Encina, J. M. Sevillano, J. L. Acebes, and J. Alvarez, "Cell wall modifications of bean (Phaseolus vulgaris) cell suspensions during habituation

and dehabituation to dichlobenil," *Physiologia Plantarum,* vol. 114, pp. 182-191, 2002.

[85] A. G. Tavares, D. F. M. d. Monte, A. d. R. Albuquerque, F. C. Sampaio, M. Magnani, J. P. d. Siqueira Júnior*, et al.*, "Habituation of enterotoxigenic Staphylococcus aureus to Origanum vulgare L. essential oil does not induce direct-tolerance and cross-tolerance to salts and organic acids," *Brazilian Journal of Microbiology,* vol. 46, pp. 835-840, 2015.

[86] C. J. Duffy and T. J. Teyler, "Development of habituation in the dentate gyrus of rat: Physiology and anatomy," *Brain Research Bulletin,* vol. 3, pp. 305-310, 7// 1978.

[87] D. A. Wilson, "Habituation of Odor Responses in the Rat Anterior Piriform Cortex," *Journal of Neurophysiology,* vol. 79, pp. 1425-1440, 1998.

[88] C. Bailey and M. Chen, "Morphological basis of long-term habituation and sensitization in Aplysia," *Science,* vol. 220, pp. 91-93, 1983.

[89] A. Boudaoud, A. Burian, D. Borowska-Wykręt, M. Uyttewaal, R. Wrzalik, D. Kwiatkowska*, et al.*, "FibrilTool, an ImageJ plug-in to quantify fibrillar structures in raw microscopy images," *Nature Protocols,* vol. 9, pp. 457-463, 2014/02// 2014.

[90] K. M. Heinemeier, J. L. Olesen, F. Haddad, H. Langberg, M. Kjaer, K. M. Baldwin*, et al.*, "Expression of collagen and related growth factors in rat tendon and skeletal muscle in response to specific contraction types," *The Journal of Physiology,* vol. 582, pp. 1303-1316, 2007/08/01/ 2007.

[91] J. Kanta, S. Dooley, B. Delvoux, S. Breuer, T. D'Amico, and A. M. Gressner, "Tropoelastin expression is up-regulated during activation of hepatic stellate cells and in the livers of CCl(4)-cirrhotic rats," *Liver,* vol. 22, pp. 220-227, 2002/06// 2002.

[92] C. R. Lee, D. Sakai, T. Nakai, K. Toyama, J. Mochida, M. Alini*, et al.*, "A phenotypic comparison of intervertebral disc and articular cartilage cells in the rat," vol. 16, pp. 2174-2185, 2007/12// 2007.

[93] A. Park, M. V. Hogan, G. S. Kesturu, R. James, G. Balian, and A. B. Chhabra, "Adipose-Derived Mesenchymal Stem Cells Treated with Growth Differentiation Factor-5 Express Tendon-Specific Markers," *Tissue Engineering Part A,* vol. 16, pp. 2941-2951, 2010/09// 2010.

[94] K. Tiede, A. Melchior-Becker, and J. W. Fischer, "Transcriptional and posttranscriptional regulators of biglycan in cardiac fibroblasts," *Basic research in cardiology,* vol. 105, pp. 99-108, 2010/01// 2010.

[95] Y. Yang, E. Y. Estrada, J. F. Thompson, W. Liu, and G. A. Rosenberg, "Matrix metalloproteinase-mediated disruption of tight junction proteins in cerebral vessels is reversed by synthetic matrix metalloproteinase inhibitor in focal ischemia in rat," *Journal of cerebral blood flow and metabolism: official journal of the International Society of Cerebral Blood Flow and Metabolism,* vol. 27, pp. 697-709, 2007/04// 2007.

[96] M. Zhou, R. Wu, W. Dong, A. Jacob, and P. Wang, "Endotoxin downregulates peroxisome proliferator-activated receptor-gamma via the increase in TNF-alpha release," *American journal of physiology. Regulatory, integrative and comparative physiology,* vol. 294, pp. R84-92, 2008/01// 2008.

[97] X.-l. Ma, Z.-p. Liu, J.-x. Ma, C. Han, and J.-c. Zang, "Dynamic expression of Runx2, Osterix and AJ18 in the femoral head of steroid-induced osteonecrosis in rats," *Orthopaedic Surgery,* vol. 2, pp. 278-284, 2010 2010.
[98] K. J. Livak and T. D. Schmittgen, "Analysis of relative gene expression data using real-time quantitative PCR and the 2(-Delta Delta C(T)) Method," *Methods,* vol. 25, pp. 402-408, 2001/12// 2001.

Appendix A: Signal Generator Testing

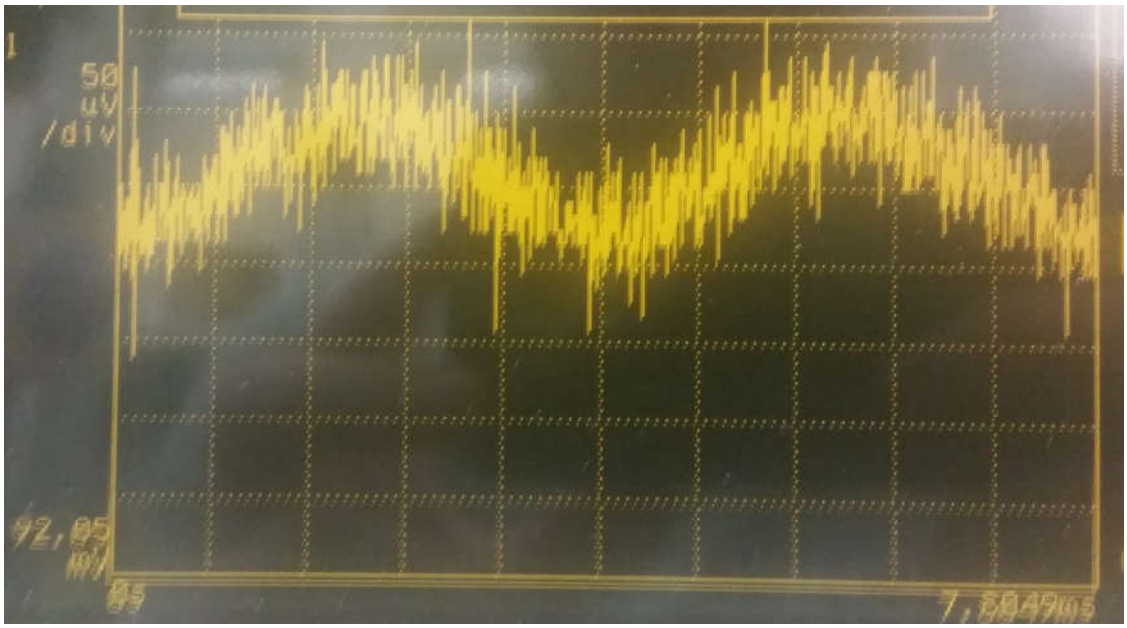

Figure 7: Wavetek Signal at ~100 Hz
Sample was recorded in 8 ms. The sine waveform is clearly visible, albeit noisy.

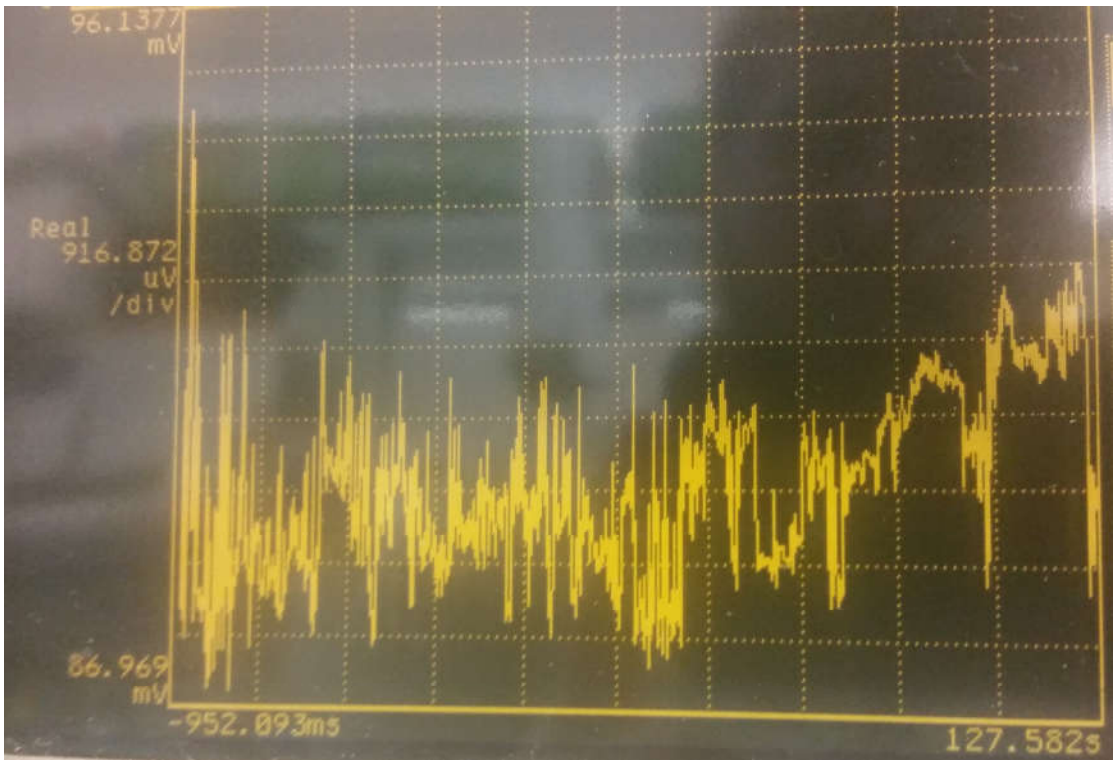

Figure 8: Wavetek Signal at ~0.1 Hz

Sample was recorded over 2 min. If a proper waveform was generated, roughly 20 peaks should be visible.

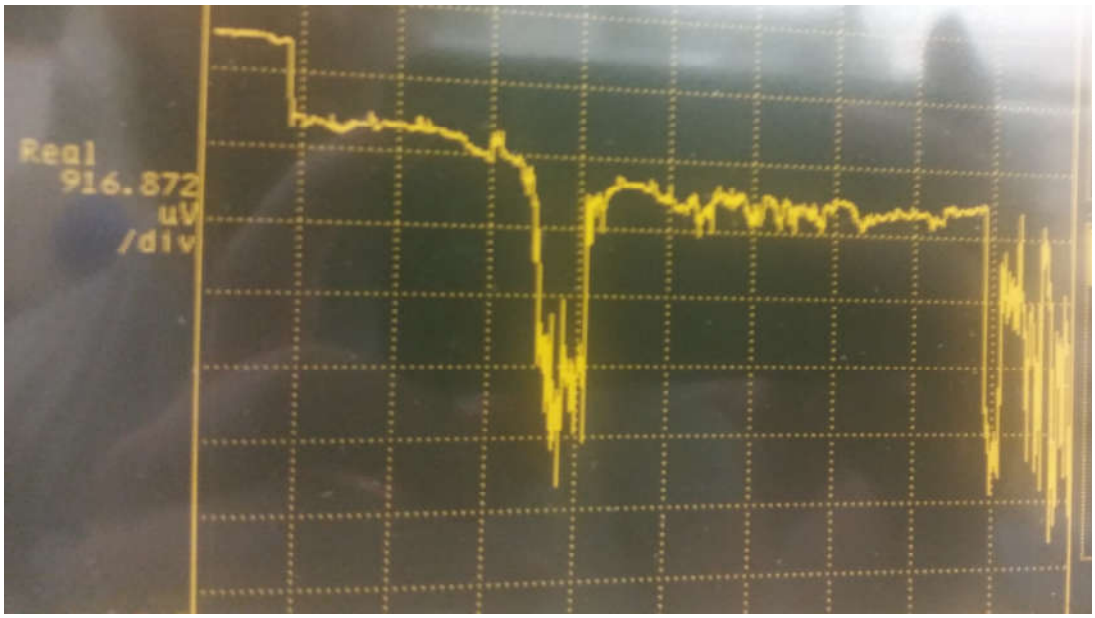

Figure 9: Wavetek Signal at ~0.01 Hz
Sample was recorded over 2 min. At 0.01 Hz, 2 clearly defined peaks should be visible.