INFORMATION TO USERS

This reproduction was made from a copy of a document sent to us for microfilming. While the most advanced technology has been used to photograph and reproduce this document, the quality of the reproduction is heavily dependent upon the quality of the material submitted.

The following explanation of techniques is provided to help clarify markings or notations which may appear on this reproduction.

1. The sign or "target" for pages apparently lacking from the document photographed is "Missing Page(s)". If it was possible to obtain the missing page(s) or section, they are spliced into the film along with adjacent pages. This may have necessitated cutting through an image and duplicating adjacent pages to assure complete continuity.

2. When an image on the film is obliterated with a round black mark, it is an indication of either blurred copy because of movement during exposure, duplicate copy, or copyrighted materials that should not have been filmed. For blurred pages, a good image of the page can be found in the adjacent frame. If copyrighted materials were deleted, a target note will appear listing the pages in the adjacent frame.

3. When a map, drawing or chart, etc., is part of the material being photographed, a definite method of "sectioning" the material has been followed. It is customary to begin filming at the upper left hand corner of a large sheet and to continue from left to right in equal sections with small overlaps. If necessary, sectioning is continued again—beginning below the first row and continuing on until complete.

4. For illustrations that cannot be satisfactorily reproduced by xerographic means, photographic prints can be purchased at additional cost and inserted into your xerographic copy. These prints are available upon request from the Dissertations Customer Services Department.

5. Some pages in any document may have indistinct print. In all cases the best available copy has been filmed.

University Microfilms International
300 N. Zeeb Road
Ann Arbor, MI 48106

Downloaded from SHAREOK. Persistent Handle URL: https://hdl.handle.net/11244/5041

8225518

Van Wie, Bernard John

CONCEPTUALIZATION AND EVALUATION OF TECHNIQUES FOR CENTRIFUGAL SEPARATION OF BLOOD CELLS: OPTIMUM PROCESS CONDITIONS, RECYCLE, AND STAGEWISE PROCESSING

The University of Oklahoma PH.D. 1982

University
Microfilms
International 300 N. Zeeb Road, Ann Arbor, MI 48106

Copyright 1982

by

Van Wie, Bernard John

All Rights Reserved

THE UNIVERSITY OF OKLAHOMA

GRADUATE COLLEGE

CONCEPTUALIZATION AND EVALUATION OF TECHNIQUES FOR CENTRIFUGAL SEPARATION OF BLOOD CELLS: OPTIMUM PROCESS CONDITIONS, RECYCLE, AND STAGEWISE PROCESSING

A DISSERTATION

SUBMITTED TO THE GRADUATE FACULTY

in partial fulfillment of the requirements for the

degree of

DOCTOR OF PHILOSOPHY

By

BERNARD JOHN VAN WIE

Norman, Oklahoma

1982

CONCEPTUALIZATION AND EVALUATION OF TECHNIQUES FOR CENTRIFUGAL SEPARATION OF BLOOD CELLS: OPTIMUM PROCESS CONDITIONS, RECYCLE, AND STAGEWISE PROCESSING

APPROVED BY

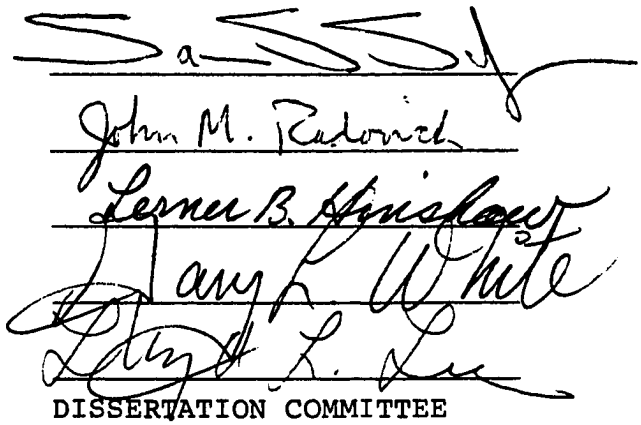

DISSERTATION COMMITTEE

Dedicated to:

Mr. Liboreo Consentino

and

Mrs. Nancy Jane Consentino

ACKNOWLEDGEMENTS

I am thankful to God for the many, many, blessings bestowed upon me throughout the course of my graduate work at the University of Oklahoma. These include all the people I've met and worked with, the objectives accomplished in the area of research, the wisdom and knowledge gained in all areas of life, and the growth and maturing I've seen in so many I've had the opportunity of being associated with. These blessings not only include the victories achieved in life, but the defeats and struggles as well, for which sometimes there seems to be no apparent explanation except that character is built.

> "Be joyful always; pray continually; give thanks in all circumstances, for this is God's will for you in Christ Jesus."
>
> I Thessalonians 5:16-18

I would like to especially thank my parents, Mr. and Mrs. Liboreo Consentino, my grandmother Margaret Van Wie, and the rest of my family for their guidance, counsel and prayers. They have been so gracious and understanding and yet motivating in the achievement of my goals.

> "My son, keep your father's commands and do not forsake your mother's teaching."
>
> Proverbs 6:20

A very special thanks should also go to one family member in particular, my brother Art, who has been there always whether I am in want or with plenty, to encourage and exhort me to do what is right. He truly is a dear friend and a brother. Thanks also to John, Jill, and Rose.

> "Two are better than one, because they have a good return for their work: If one falls down, his friend can help him up. But pity the man who falls and has no one to help him up!"
>
> Ecclesiastes 4:9&10

For my advisor, Dr. Sam Sofer, I am thankful and most appreciative for his years of support and encouragement for me to become the engineer I so desired to be. His personal interest and involvement in the lives and research interests of his students, his gentle exhortation to help motivate me, his depth of understanding of engineering concepts, his contribution to the furtherance of my goals and most of all his friendship will never be forgotten.

> "A wise man has great power, and a man of knowledge increases strength; for waging war you need guidance, and for victory many advisors."
>
> Proverbs 24:6

The advise and encouragement of my Ph.D. committee members is also deeply appreciated without which I certainly would not have been as successful. These people are Dr. John Radovich, Dr. Lloyd Lee, Dr. Lerner Hinshaw and Dr. Gary White.

"Plans fail for lack of counsel, but with many advisors they succeed."

Proverbs 15:22

The painstaking efforts of undergraduate help to accomplish project goals played a critical part in the overall development of my research efforts. One student in particular, Will Kastens, I am extremely thankful for because of his faithfulness and availability over the past four years that he has worked with me. Others that must be mentioned are Frank Eaton, Karen Daughterty, Jimmy Ivie, Mark Mansell, Brian Vanderheyden, Lester Landis, Janet Ray, Paris Hajali, Kaivon Sarcon, Salim Srougi, Hasel Thomas and Arlen Honts. These have all spent many hours on various aspects of my research efforts.

The jovial manner and hard work of K Hudson in the machining of the experimental centrifuge apparatus and the late hours for Linda Hubble, Margaret Williford, Catherine Jackson and Yolanda Melendez in the typing of this manuscript is also greatly appreciated. A great appreciation is also felt for Bernie Wire, Obaji Niobie, Dave Dougherty and Janet Ray for the tremendous work on illustrations and drawings.

For all these I am thankful for their diligence.

"The sluggard craves and gets nothing, but the desires of the diligent are fully satisfied."

Proverbs 13:4

The support of Chemical Engineering faculty members Dr. Carl Locke, Dr. Ken Starling, Dr. Mark Townsend, Dr. Ed O'Rear, and Dr. John Scamehorn is also greatly appreciated. Others were also always available around the lab to offer stimulating insights and encouragement including Alan Pegues, Sam Penrod, Joe Sontheimer, Jeff Savidge, Hemanth Kumar, Hemant Goradia, Mark Southard and I'm sure there are some I've left out. The prayers and support of close friends is also deeply appreciated. Thanks to Larry and JoAnn, Brad, George, Steve, Wally, Paige, Katie, Polly, Kelly, Kathy, Hardy, Joe, Allen, Rick, Perry, Mark, Wayne, Fish, Paul and others. I'm also thankful for Paul Ziert, the O.U. gymnastics coach, who has been an encouragement to me not only in my previous involvement in athletics but also in my academic achievements.

> "And let us consider how we may spur one another on toward love and good deeds. Let us not give up meeting together, as some are in the habit of doing, but let us encourage one another - and all the more as you see the Day approaching."
>
> Hebrews 10:24&25

ABSTRACT

Engineering approaches to the efficient separation of blood components have been conceptualized and evaluated. The approaches studied have included the processing of blood at reduced hematocrits, processing through stages in series or multistage apparatuses, and recycle processing. Evaluation of conceptualized separation processes has been aided by the construction of a continuous seal-less centrifuge using a two-staged spiral blood chamber rotor. Preliminary design data have revealed that such approaches have great potential for enhancing cell yields and improving separation efficiencies. The project emphasis has been on the separation of leukocytes and erythrocytes, but the concepts developed have been expected to be readily applicable to the separation of platelets, specific leukocyte types (granulocytes, lymphocytes, monocytes and stem cells), reticulocytes and gerocytes, and other cellular species.

TABLE OF CONTENTS

			Page
LIST OF TABLES			xii
LIST OF FIGURES			xiii
CHAPTER I		INTRODUCTION	1
CHAPTER II		BACKGROUND	5
	2.1	STATE OF THE ART	5
	2.2	DISCUSSION OF CELLULAR COMPONENT NEEDS	5
		2.2.1 Red Blood Cells	5
		2.2.2 White Blood Cells	6
		2.2.3 Platelets	13
		2.2.4 Neocytes	14
		2.2.5 Stem Cells	15
	2.3	DISCUSSION AND EVALUATION OF PRESENT PROCESS DESIGNS	16
	2.4	CONCLUSION	25
CHAPTER III		BLOOD SEPARATION THEORY	27
	3.1	APPLICATION OF SEDIMENTATION THEORY	27
		3.1.1 Previous Developments	27
		3.1.2 Implications of Previous Developments	34
	3.2	EFFECTS DUE TO DEGREE OF ROULEAU FORMATION	45
		3.2.1 Extension of Previous Experimental Work	45
		3.2.2 Implications of Theoretical Developments for Degree of Rouleau Formation	51
		3.2.3 Conclusions from Above Analysis	56

		Page
3.3	APPLICATION TO CONTINUOUS FLOW PROCESSING	58
3.3.1	Previous Developments	58
3.3.2	Implications of Continous Flow Processing Modeling	69
3.3.3	Considerations for Degree of Rouleau Formation	70
3.3.4	Conclusions for Continuous Processing Developments	74
CHAPTER IV	DEVELOPMENT OF PROCESS DESIGNS	76
4.1	APPLICATION OF RECYCLE CONCEPTS	76
4.1.1	Purpose for Recycle Applications	76
4.1.2	Application of Recycle Concepts to Blood Separations	80
4.1.3	Implications of Design Theory	86
4.1.4	Process Design Constraints for Recycle Processes	91
4.1.5	Analysis of Chamber Design for Increased Flow in Recycle Chambers	92
4.1.6	Design Alternatives for Recycle Processing	97
4.1.7	Concluding Remarks Concerning Recycle Processing	98
4.2	STAGES IN SERIES	104
4.2.1	Extension of Single Stage Developments to Stages in Series	104
4.2.2	Implications of Design Analysis	108
4.2.3	Concluding Remarks Concerning Design Implications	110
4.3	MULTISTAGE PROCESSING	113
4.3.1	Discussion of Multistage Theory as it Relates to Blood Processing	113
4.3.2	Development of Simplified Approaches and Implications	124
4.3.3	Potential Stagewise Process Designs	133
CHAPTER V	EQUIPMENT AND METHODS	134
5.1	EXPERIMENTAL EQUIPMENT	134

Page

5.2 METHODS 136
5.2.1 Experimental Procedures 136
5.2.2 Experimental Sampling Procedures and Sample Analysis ... 137

CHAPTER VI RESULTS AND DISCUSSION 141

6.1 SINGLE STAGE OPERATION 142
6.1.1 Effect of Red Cell Hematocrit on Separation 142
6.1.2 Modeling of Experimental Results 152

6.2 RECYCLE APPLICATIONS 154
6.2.1 Effect of Recycle on Efficiency 154
6.2.2 Isolation of Specific Leukocyte Types 156
6.2.3 Effect of Recycle on Cell Viability 157
6.2.4 Concluding Remarks Regarding Recycle Processing 158

6.3 PROCESSING WITH STAGES IN SERIES 160
6.3.1 Discussion of Experimental Study 160
6.3.2 Process Design Alternatives ... 163
6.3.3 Concluding Remarks Concerning Stages in Series 167

6.4 MASS BALANCES FOR EXPERIMENTAL RUNS .. 167

6.5 MULTISTAGE PROCESSING 169

6.6 PROCESS COMPARISON 172

CHAPTER VII SUMMARY AND RECOMMENDATIONS 178

APPENDIX A DESCRIPTION OF POTENTIAL STAGEWISE PROCESS DESIGNS 184

APPENDIX B NOMENCLATURE 216

BIBLIOGRAPHY 221

LIST OF TABLES

Table		Page
1.	Density Ranges for Various Cell Types.....	11
2.	Physical Characteristics of Blood Components.....	40
3.	Sedimentation Velocities for RBC's, WBC's and Platelets at 1500 RPM.....	41
4.	Effect of Degree of Rouleau Formation on Red Cell Sedimentation Velocities and Difference Between Red and White Cell Sedimentation Velocities.....	52
5.	Fractional Recovery and Feed Rate Information as a Function of HCT.....	71
6.	Effect of Holding Superficial Velocity Constant with Increasing Feed Flow Rate..	95
7.	Effect of Holding Shear Rate Constant with Increasing Feed Flow Rate.....	96
8.	Experimental Fractional Recovery Data as a Function of HCT for Saline Dilutions...	146
9.	Curve Fit of Empirical Data, 45 HCT Run....	153
10.	Effect of Recycle on White Cell Recoveries.....	155
11.	Experimental Fractional Recoveries for Six Stages of Operation.....	162

LIST OF FIGURES

Figure		Page
1.	Rotor Types	18
2.	Gravity Sedimentation in a Test Tube	35
3.	Rouleau Formation	37
4.	Cell Sedimentation Velocities as a Function of HCT	43
5.	Difference Between Red and White Cell Sedimentation Velocities	46
6.	Effect of Rouleau Size on Sedimentation	53
7.	Volume Element for the Radial-Flow Centrifuge	59
8.	Fractional Recoveries of WBC's and Platelets as a Function of HCT	72
9.	Single Stage Recycle Centrifugation	78
10.	WBC Collection Efficiency for Fixed Maximum Recycle Rate	87
11.	WBC Collection Efficiency with Recycle for Fixed Non-Recycle Fractional Recovery	89
12.	Dual Stage Recycle Centrifugation with Continuous Buffy Coat Collection in Second Stage	99
13.	Triple Stage Recycle Centrifugation with Continuous Collection of Buffy Coat and Platelets	101

Figure		Page
14.	Stages in Series for Cell Harvesting.....	106
15.	Overall Fractional Recovery Through a Series of Stages.....	111
16.	Multistage Blood Processing Flow Diagram.....	114
17.	Industrial Distillation Column Schematic..	117
18.	Stripping Section for Harvesting WBC's and Platelets.....	126
19.	WBC Collection Efficiency for a Stripping Section and Collection from Successive Stages.....	129
20.	Collection of Buffy Coat from Successive Stages.....	131
21.	Micro Hematocrit Reader.....	138
22.	Fractional Recovery Data for the "Light End" of a Spiral Chamber.....	143
23.	"Heavy End" Fractional Recovery Data for 41% HCT Feed Blood.....	148
24.	"Heavy End" Fractional Recovery Data for 38% HCT Feed Blood.....	150
25.	Red and White Cell Fractional Recovery Difference vs HCT.....	164
26.	WBC Collection Efficiencies for Various Processes.....	173
A1	Separation Stages in Series.....	186
A2	Rectifying Process for Blood Separations..	188
A3	Stripping Process for Blood Separations...	190
A4	Fractionating Process for Blood Separations.....	192
A5	Series of Radial Stages for Blood Separation.....	194
A6	Flow Pattern for Radial Stage Design of Stages in Series.....	196

Figure		Page
A7	Flow Pattern for Radial Stage Design of a Rectifying Process	198
A8	Flow Pattern for Radial Stage Design of of a Stripping Process	201
A9	Flow Pattern for Radial Stage Design of a Fractionating Process	203
A10	Concentric Annular Centrifugal Blood Separation Process	205
A11	Stacked Spirals for Multistage Processing	207

CHAPTER I

INTRODUCTION

> "There are no grounds for believing that the full potential of component cell therapy has in any way been attained...research must continue to perfect mechanisms for the selective separation and collection of each cellular component of the blood,..."(1)

The above excerpt, a quote appearing in a recent paper by Dr. John M. Goldman of Hammersmith Hospital in London, has been chosen to illustrate that although vast numbers of devices and processes are currently available for blood processing, the goal of supplying all of the current needs is far from being reached. Although blood cell separation techniques have undergone vast improvements within recent years, techniques still need to be further developed for enhancing cell yields, collection specificity, and collection efficiencies.

One potential benefit of such improvements would be a reduction in the time requirement for the connection of a donor patient to an extracorporeal device. Also greater collection efficiencies would increase the availability of blood cellular components so that the products

of collection procedures might be more readily available to more patients. One such need was indicated by Dr. G. M. Goldman in a recent IBM Medical Review for the collection of granulocytes. The goal would be to increase the rate of granulocyte collection by a factor of 5 to 10 (1).

Another needed benefit is greater cell purity for collected species. For instance it is helpful to obtain lymphocyte free platelets for transfusions to help eliminate febrile reaction sensitization of tissue antigens due to antigen incompatibility. Of further interest is to reduce or even eliminate the necessity for blood sedimenting agents to be used during collection procedures. It is already anticipated that in the future the red cross will be putting restraints on the amount of sedimenting agents which are allowed to be used (2). Of concern is the long term effects of these agents on donor as well as recipient patients.

Other interests lie in the area of enhancing the selectivity of blood separating devices for producing individual cell types to meet more specific needs. For instance, there are current needs for specific mononuclear cells. These include: monocytes which are thought to be less immogenic than granulocytes and yet when transfused at much lower concentrations than those used for granulocyte transfusions will still combat infection; lymphocytes which could be transfused for a

number of diseases where specific immuno deficiencies are indicated; and hematopoietic stem cells, isolated from the periferal blood of steroid pretreated patients, to be used in bone marrow reconstitution (1). Some progress has also been made in the isolation of young red blood cells or reticulocytes for administration to patients suffering from Thalessemia (3).

The separation devices currently available have already received widespread clinical use for the separation of plasma, platelets (or platelet rich plasma), leukocytes and concentrated red cells. The overall intent of this work however, has been to lay the groundwork for new centrifugal separation devices and procedures which will not only perform the above processes more efficiently, but will also expand the use of such devices to meet more specific needs.

Accomplishment of the above objectives has been through the application of conventional engineering techniques and mathematical modeling approaches. These techniques and approaches include: (1) the determination of optimum process operating conditions in order to maximize cell separation capabilities; (2) the application of recycle concepts to improve process efficiencies and for the control of feed concentrations; and (3) the investigation of stagewise processing to improve process efficiencies and selectivities.

To aid in performing the above analysis a state-of-the-art continuous seal-less centrifugal blood processor was designed and built. The processor was used to obtain preliminary data and to determine process design constraints which can be used for future design conceptualization.

CHAPTER II

BACKGROUND

2.1. STATE OF THE ART

Many processes already exist for the separation of and collection of transfusable quantities of various blood cellular components. The particular blood components of concern are namely red blood cells (RBC's), white blood cells (WBC's), and platelets. Also the separation of reticulocytes has been met with some success (3,4). Most of the collection processes, however, have not been met with complete satisfaction (5-8). Some collection methods cause severe losses due to damage of the desired components, while others are simply ineffective in achieving complete separation (8). A description of the existing blood component needs will follow with a discussion of the shortcomings involved in meeting these needs.

2.2. DISCUSSION OF CELLULAR COMPONENT NEEDS

2.2.1. Red Blood Cells

Red blood cells, which may be indicated for treatment of anemia, can be collected by differential centrifugation. However, excessive cell losses have been

incurred with the more conventional centrifugation procedures due to shear stresses induced within the centrifuge mechanism (9). Filtration through a nylon mesh is another commonly used method for red blood cell (RBC) collection. Filters are not as harsh on the RBC's but have a disadvantage in that lymphocytes and platelets are not trapped by filters. The presence of lymphocytes and platelets makes the matching of donors and recipients more critical because of febrile reactions or sensitization of tissue antigens due to antigen incompatability. Other collection methods exist such as saline washing, but when used alone, even washing is not adequate (9). Despite the disadvantages mentioned for each type of red blood cell collection procedure, enough concentrated RBC's are collected by blood banking services to make RBC transfusions an effective therapeutic treatment. This is not to say, however, that improvements in collection techniques are not welcomed.

2.2.2. White Blood Cells

Another area where blood component therapy has become increasingly important is in combating septic infections. Among those suffering from such infections are burn patients where much of the skin has been destroyed thus breaking down the first physical barrier to bacterial infection. Others are patients afflicted with hematological

malignancies (10-12) such as leukemia or solid tumors (13). The customary treatment of these disorders is the introduction of certain drugs or ionizing radiation to kill cancerous cells, but these treatments also shut down bone marrow activity and therefore the production of infection fighting granulocytes (2). As a result infections from bacteria or fungi remain the leading cause of death for such disorders (14,15). Still others experiencing a similar problem are people suffering from stomach wounds. Because man has an indigenous source of microorganisms in his intestinal tract (16), harmful bacteria can pass through a wound directly into the blood stream.

Treatment of septic infections can be accomplished by the transfusion of large quantities of viable granulocytes (comprising 60-70% (17) of the donor periferal WBC population) to an infected patient (18-21). The therapy has great potential, but as in the case of red blood cell transfusions, collection procedures need to be improved (13).

The two major techniques for collecting granulocytes are continuous flow centrifugation leukapheresis (CFCL) and filtration leukapheresis (FL)(22). Both techniques have been used successfully to yield as many as 10^9 granulocytes (13) over a 4 hour period. However, since estimated granulocyte requirements are on the order of 10^{10} (13), techniques must be used to further

increase granulocyte yields. One such method is to pretreat the donor with steroids such as dexamethasone or prednisolone (13, 22-24) to increase white cell counts in the circulation, thereby increasing the number of cells available for collection.

Another method used in continuous flow centrifugation is to use an erythrocyte sedimenting agent such as dextran (23-25) or hydroxyethyl starch (HES)(13, 23-27). When adding these sedimenting agents, red blood cells tend to have a greater affinity for each other causing them to "stick" together in what resembles rows of stacked coins. This phenomenon is referred to as rouleau formation and its effect is to preferentially increase the red blood cell sedimentation rate (13) over that of the leukocytes.

Employment of the above mentioned techniques has been shown to increase granulocyte yields to $1.3 - 5.2 \times 10^{10}$ for CFCL (28-32) and $2.0 - 10 \times 10^{10}$ (13) cells for intermittent flow leukapheresis (IFL). Yields for FL (filtration leukapheresis) have been shown to exceed those for centrifugal techniques when donor patients are pretreated with steroids. Filtration collection procedures, however, usually result in functional and morphological abnormalities which are responsible for side reactions often exhibited in the donors and recipients (21, 33, 34).

Despite the fact that sufficient quantities of granulocytes can be obtained, enhanced separation procedures would serve to decrease collection times. Furthermore, the recovery of greater numbers of granulocytes for therapy may reduce the number of transfusions required for a given patient. An additional reason for the development of improved techniques is that the Red Cross is now beginning to limit the use of sedimenting agents (2). These limitations will severely restrict the use of many conventional processes which are greatly dependent on the use of sedimenting agents in order to maintain high yields and efficiencies.

Of further interest would be to enhance the selectivity of leukocyte separation processes thereby yielding transfusable quantities of specific WBC types including monocytes, lymphocytes and granulocytes from the periferal blood. To date no efficient processes exist for the isolation of transfusable quantities of these individual components (35). The only practical processes which are currently available for such separations are those which have been developed using density gradient media which have been limited to small-scale, batch operations (36-43). Still these methods deserve some discussion since it is conceivable that they may have some future application in large scale continuous flow processes.

The basic principle of density media techniques is to adjust cell suspending fluid density to an intermediate value between that of two cellular species which one desires to separate. For density ranges of various blood cellular species see Table 1. After centrifugation the less dense species will be found "floating" on top of the density medium while the more dense species will be found to have "sunk" to the bottom. One such method investigated by Böyum has been used successfully to isolate pure lymphocyte fractions using a Hypaque (sodium diatrizoate) density gradient containing an RBC agregating agent Ficoll (37). Other successful means for isolating blood cellular components have used albumin density gradients (36) and Percoll colloidal suspensions (43). Percoll suspensions are made up of fine silica particles which are coated with polyvinyl pyrolidone to prevent toxicity.

Although density media can be used rather successfully for batch processes their use with continuous processes has several limitations. One limitation is that the plasma must first be replaced by the density medium which is of an intermediate density between RBC's and WBC's. Then once the RBC's are removed the individual WBC types can be separated by replacing the current suspension medium with successively lower density media.

Table 1

Density Ranges for Various Cell Types

Cell Type	Density Range (gm/cc)
Platelets	1.050-1.057
Lymphocytes	1.060-1.027
Granulocytes	1.075-1.087
RBC's	1.080-1.099

Finally the platelets can be separated from the remaining lymphocytes through a similar process. Once separated however, each fraction must be washed with saline to remove the density gradient medium. Such a procedure although possible may be severely limited because of the complexity of having so many density changes and washing procedures.

Other limitations exist as well. One limitation as noted from Table 1 is that cellular species rather than having a specific density have a density range which in many cases overlap for different cell types. A further complication is the fact that cell density is also dependent upon the osmolarity of the surrounding fluid. An hypertonic environment will cause cellular fluid loss thereby increasing cell densities. An hypotonic environment has the reverse effect. Because both the density and osmolarity of the suspending fluid are dependent on concentration, determination of proper concentrations for correct osmolarity and density adjustment may be difficult. Another problem which is associated with the use of Percoll is that under a centrifugal force the silica particles begin to settle also (although very slowly) forming a continuous density gradient. Cells then tend to be found dispersed throughout the medium rather than being located in a narrow band as is the

case with a discontinuous Hypaque gradient. Despite the difficulties mentioned, some preliminary research has been done using density gradients for cell separations which may later prove that these processes may have clinical applications.

2.2.3. Platelets

Isolated platelets have been used for transfusions to patients suffering from thrombocytopenia (a severe platelet deficiency), manifesting itself with severe bleeding problems (44). Such problems are prevalent in leukemia patients where platelet production in the bone marrow is significantly impaired (45). Currently many processes exist for the isolation of platelet rich plasma (9, 46). The more advanced processes use continuous centrifugation to provide a stream of platelet rich plasma, although intermittent flow devices are also commonly used such as the Haemonetics cell processor (47). Because platelets are much smaller in diameter than the other blood cellular components their sedimentation rates are also much lower and they are easily separated by centrifugal processes. Thus, adequate quantities of platelets can easily be obtained with conventional devices. However, processes could still be improved upon to reduce machine-donnor connection times and also to provide platelets which are lymphocyte free in order to reduce immune reactions in transfusion recipients.

2.2.4. Neocytes

Other separation processes are just beginning to be developed for providing more specific cell types. Among them are the separation of both "neocytes" (young RBC's) and "gerocytes" (old RBC's) from the periferal blood using continuous flow cell separators (3, 4). Such separation efforts are being made for patients who require repetitive transfusions to combat chronic anemia as is the case with the hereditary disease known as Thalessemia major. Because of the need for so many transfusions with Thalessemia patients, iron overload becomes a severe problem (2). In fact accumulation of excess iron from the transfused cells becomes the limiting factor for effective therapy (4).

As a result of the need for the transfusion of large amounts of healthy RBC's for the treatment of Thalessemia, techniques are being investigated for the collection of only the young RBC's from a donor. The younger RBC's have a longer post-transfusion survival time thereby reducing the number of transfusions required. Since the younger RBC's are of slightly lower density there is a potential for separating these cells (39). For instance Propper and Marino have been successful in obtaining units (∿450 ml) of young red cells with a mean age of 13 days by differential centrifugation (3). Klein has used the IBM 2997 continuous flow cell

separator over collection periods of about 4 hours to obtain units having a mean cell age of 32 days (4). Cell age is determined by age dependent enzyme techniques. This compares to a 60 day mean cell age of a standard unit (9).

In addition to the neocyte transfusions, studies are being performed on the removal of older cells, "gerocytes", from the Thalessemia patient. Older cell removal can be accomplished because the older cells are of slightly higher density and therefore settle faster than the average red cell. Such studies have so far been met with success by decreasing the total amount of iron deposition by as much as 75% (3).

A more efficient separation process applied to "neocyte" or "gerocyte" collection would again be helpful in reducing collection times, and perhaps would be useful in reducing the mean cell age of the collected RBC's for transfusion.

2.2.5. Stem Cells

Also of recent interest has been the collection of stem cells from the peripheral blood for the hematopoitic reconstitution of bone marrow in cancer therapy (1). The stem cells are released from the bone marrow into the circulating blood stream by the administration of steroids such as prednisilone (48). Their larger size

of 15-20 microns (49) as compared to 7-10 microns (49) for a lymphocyte and 10-15 microns (49, 50) for granulocytes and monocytes, aids in the separation of the stem cells from leukocyte components. Because sedimentation rate is a function of the square of the cell diameter (51, 52) the stem cells would be found at the bottom of a test tube containing a mixture of white cell species.

2.3. DISCUSSION AND EVALUATION OF EXISTING PROCESS DESIGNS

Many centrifuge head designs have been developed and patented for use in blood cellular separations. Many of the more current designs are manufactured from disposable materials in the form of plastic bag-like containers or silicone-rubber inserts (53). Disposal of the container eliminates the need for sterilization and thereby reduces the potential for infection due to contamination. There are numerous designs on file in the U.S. and foreign patent offices, for example, patent numbers 3,145,713(U.S.) - A. Latham, Jr.; 7816351(France) - Kellogg, R.M. and Muizet, A.P.; 4,010,894(U.S.) - Kellogg, R.M. and Kruger, V.R.; 3,748,101 - Jones, A.L.; 2717344 (Germany) - Cullis and Meyers; 3,825,175(U.S.) - Sartory W.K.; and 3,957,197(U.S.) - Sartory, W.K. and Eveleigh.

All of the designs mentioned are either used in a continuous or semicontinuous operational mode. The

Latham and the Jones designs are simply toroidal plastic chambers which are sealed along their innermost and outermost diameters, and used in a semicontinuous manner for the collection of WBC's or platelets. The chamber or bag is filled with whole blood while stationary, then spun, and the plasma portion is drawn off. If platelet rich plasma is desired the blood is spun at lower rpms. Then the platelet rich plasma is drawn off. Once the plasma is withdrawn, the empty portion of the bag is refilled with whole blood and the spinning process begins again. This procedure is repeated several times until the bag is nearly filled with RBC's and buffy coat. The process is then stopped and the buffy coat is withdrawn.

All of the remaining patented designs mentioned are used in a continuous operational mode. Most of these (with the exception of the first Sartory patent) describe annular chambers with closely spaced sidewalls to eliminate mixing due to coriolis currents. Whole blood is introduced at one end of the chamber and is separated into three fractions as it travels to the opposing end of the chamber. Figure 1a illustrates an axial design that is used in the Cullis and Meyers rotor. The three fractions recovered consist of concentrated RBC's, a buffy coat layer (mixture of all white cell types and platelets), and either a plasma or platelet rich plasma layer. Another design like that of Kellogg and Muizet, and that of Kellogg and Kruger also has fluid entering an annular

Figure 1. Rotor Types. a. Represented is a cross-sectional diagram of an axial-flow rotor consisting of a long narrow cylindrical separation chamber. Flow is predominantly in the axial direction while cell sedimentation is in the radial direction. b. A radial flow rotor can usually best be described as a flattened annular chamber and is represented by this cross-sectional diagram. Flow and cell sedimentation are predominantly in the radial direction.

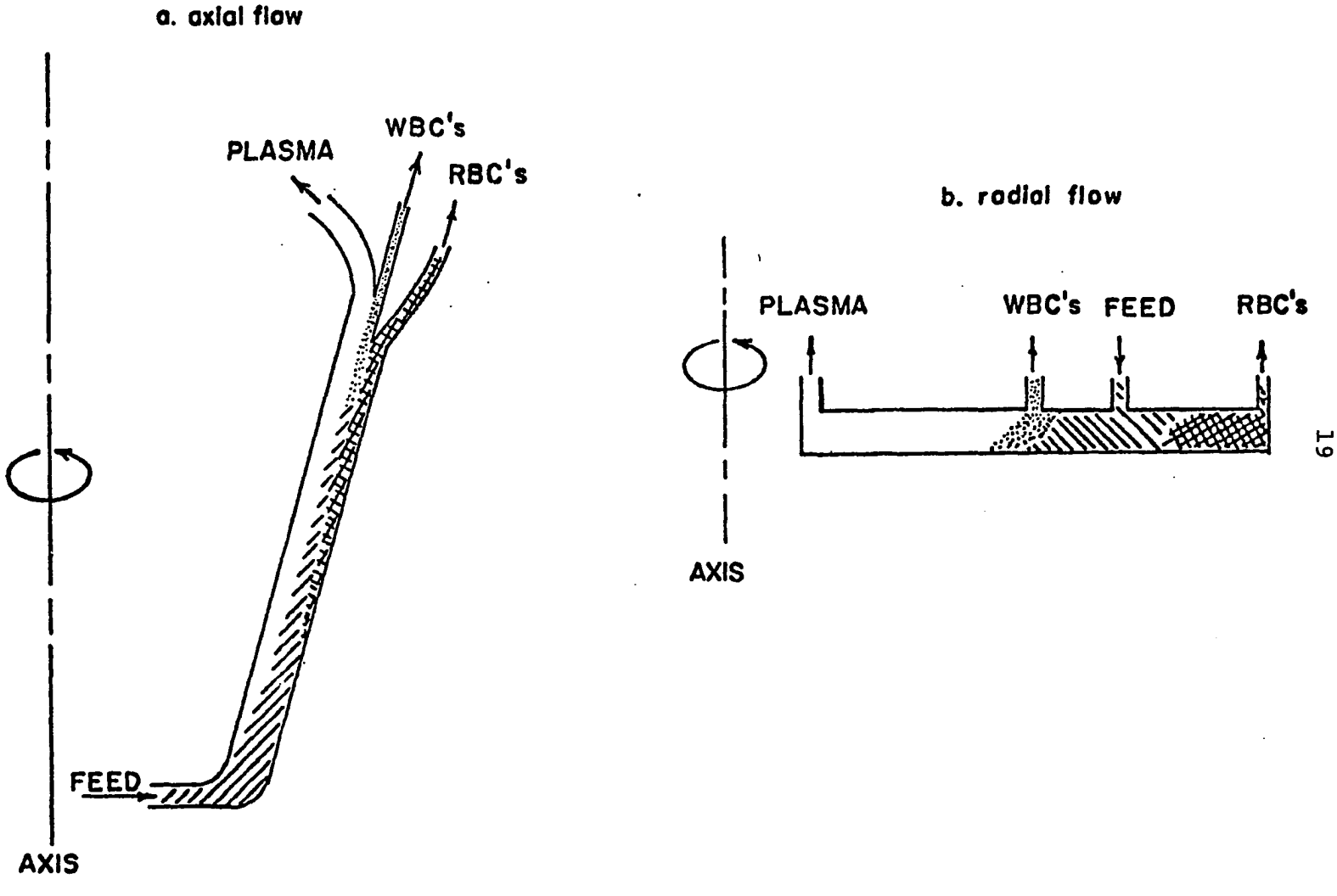
a. axial flow
PLASMA
WBC's
RBC's
FEED
AXIS
b. radial flow
PLASMA
WBC's
FEED
RBC's
AXIS

Figure 1

chamber, but the whole blood travels circumferentially entering at one point and separating as it travels along the circumference. The design of Kellogg and Kruger is one of the few that incorporates more than one stage. The use of their dual-stage design is focused on the collection of platelets. RBC's and WBC's are concentrated and removed in the first stage while platelet rich plasma is routed to the second stage where the platelets are concentrated. Kolobow and Ito of NIH have also done work with platelet harvesting in a dual-staged spiral apparatus (53). Whole blood enters at an intermediate diameter into the spiral, while heavier cells (RBC's and WBC's) are collected at the outermost diameter of the spiral. Lighter components (platelets and plasma) are concentrated at the innermost diameter of the spiral where they are removed and infused into a second stage where the platelets are concentrated.

An interesting method for the operation of annular designs is described in the Sartory and Eveleigh patent. Because the positioning of product stream spliting blades (see Figure 1a) is critically dependent upon feed hematocrit, feed rate, and cell settling characteristics, a method needed to be developed to take into account the wide variation in donor blood from patient to patient. The Sartory and Eveleigh design maintains feed hematocrit at an optimum level for the

apparatus by recycling plasma to decrease hematocrits or recycling concentrated RBC's to increase hematocrits. Feed rates are regulated to maintain a desired degree of separation by monitoring the hematocrit of the separated red cells. This method is not limited to axial designs but could be easily adapted to radial or spiral designs as well. With the radial and spiral designs the positioning of exit ports is dependent upon the location of separated product interfaces which ultimately is dependent upon blood feed conditions.

Another design which deserves mention is the continuously operating radial design (see Figure 1b), where whole blood is infused at an intermediate radius of a flattened annular chamber. Heavier components (RBC's) are continuously harvested at the outermost diameter at a constant flow rate, while lighter components (WBC's and platelets) are harvested at inner diameters. The Sartory patent uses this approach along with an elutriation scheme where a suspending fluid or recycled plasma is introduced at the concentrated RBC end. The plasma or suspending fluid moves in the centripital direction (toward the axis) carrying along some of the WBC's and platelets which have been entrapped by the settling RBC's. In order to accomplish this task suspending fluid velocity is adjusted so that it is of an intermediate velo-

city between the settling velocity of the RBC's and that of the WBC's and platelets. The goal of such a device is to increase WBC and platelet harvest rates by decreasing the loss of these components to the concentrated RBC stream.

As evidenced by the previous discussion, the processes and apparatuses for centrifugal separation of blood components are numerous. Much time and effort has been put into the development of these processes and apparatuses to make them more efficient. However, until this time several methods of operation have yet to be throughly investigated. These methods include operation at high recycle rates, development of a continuous operating density gradient process, the use of stages in series, and the use of multistage apparatuses. From a chemical engineer's perspective, before the most efficient design processes can be realized the potential use of such methods must be systematically evaluated. The application of such methods for separations in the chemical industry has proven successful in gaining higher purity of separated products, in reducing overall processing times, and in enhancing the specificity of desired product yields.

Perhaps the application of these methods to blood centrifugation would be of benefit as well. The potential for using a continuous operating density gradient separa-

tion has been previously discussed. High recycle rates of concentrated RBC streams should increase efficiencies by giving entrapped platelets and WBC's enhanced "opportunity" for separation. Similarly the routing of concentrated RBC streams sequentially through a series of stages and removing separated WBC's from the light end of each stage gives WBC's an enhanced "opportunity" for separation. With multistaged processes a complete separation of any one component or group of components never takes place in one particular stage, but rather a gradual enriching of these components as they pass from stage to stage. The aim of this dissertation is to evaluate the application of these engineering techniques to blood separations. By doing this hopefully blood processing can be made more efficient, the collection of specific components can be enhanced and donor patient collection times can be reduced.

Certain limitations have in the past hindered the application of the above perscribed methods. One limitation is that the application of engineering principles to a medical field requires an interdisciplinary effort. To accomplish this task, one must be willing to expand his horizons by "rubbing elbows" with those outside his field. Some work has already begun on bridging this gap. Dr. Ito of NIH has spent much time looking

at the engineering aspects of his designs (54). Julian Breillatt, a biochemist, of Oakridge National Labs had an aeronautical and a chemical engineer on his team (15). Many of the blood centrifuge manufacturing companies, such as Haemonetics Corp., IBM, Gambro, Inc., Dideco, Inc., and Fenwal Laboratories have either expressed an interest in hiring chemical engineers or in consulting chemical engineers on their processes (54-58). Despite recent interest of engineers in the blood separations field, no groups have expressed that they are actively engaged in ongoing research with high recycle rates, continuous operating density gradients or stagewise processing (12 15, 53-58).

Another hindrance to progress in applying the described processes is the method in which liquid lines are attached to a multistage apparatus or recycle apparatus. Since much interstage pumping is required, many process lines may have to pass from the rotating head to stationary pumps located outside of the centrifugal apparatus. Many designs exist which use a rotating seal for attachment of the liquid lines. However, the cost of manufacturing a seal which would accommodate a multitude of process lines may be prohibitive. Furthermore many problems have been encountered with the use of seals even with a limited number of blood process

lines. These problems include platelet damage due to shear stresses induced by passage of blood through the seal (59, 60), and leakages and intercommunication between process lines passing through the seal (53).

In recent years a design has been developed for circumventing the rotating seal. The design allows for direct attachment of flexible tubes to a rotating device. The tubes are counter-rotated by an antitwister mechanism to keep them from being twisted. Many patents have already been issued for antiwister mechanisms. Some of these include U.S. patents nos. 4,132,349 - Khoja; 4,056,224 - Lolachi; 4,113,173 - Lolachi; Re 29,738 - Adams; and Swedish patent no. 7708858-1.

Without the antitwister mechanism the proposed application of the engineering principles mentioned may be limited. However, since a number of antitwister mechanisms have been built and the technology is now available, greater probability of success is expected.

2.4. CONCLUSION

Although separation processes have already been developed for many new and important applications, improvements on existing processes are continually being sought (35). Improvements need to be made so that any specific blood component can be provided quickly and efficiently. The faster processes are continuous processes (43), yet one can sacrifice efficiency during

continuous runs if operating parameters are not precisely controlled (58). Thus improvements in centrifugation technology are welcomed.

CHAPTER III

BLOOD SEPARATION THEORY

The following discussion will focus on the key factors involved in approaching the problems of enhancing blood cell separations and how these factors influence various process schemes for accomplishing the separations. First a look will be taken at how the physical characteristics of cellular species and suspending fluid media affect sedimentation. Next a look will be taken at how these settling characteristics combined with information about flow regimes within centrifugal settling chambers affect the separation of individual cellular species.

3.1 APPLICATION OF SEDIMENTATION THEORY

3.1.1 Previous Developments

In the mid 19th century, Stokes studied the motion of immersed bodies in viscous fluids in a gravitational force field (61,63), and developed the following equation to predict particle terminal velocity or sedimentation rate:

$$S_t = \frac{2}{9} \frac{r^2 (\rho_i - \rho_f) g}{\mu} \qquad (1)$$

where: S_t is the settling velocity,

r is the particle radius,

ρ_i is the particle density,

ρ_f is the fluid density,

μ is the fluid viscosity and

g is the graviational constant.

Under a centrifugal force field, the effect of gravity usually becomes negligible compared to the centrifugal acceleration for the force of gravity, Stokes' equation becomes:

$$S_t = \frac{2}{9} \frac{r^2 (\rho_i - \rho_f)}{\mu} \omega^2 r_c \qquad (2)$$

where ω is the angular velocity and

r_c is the radial distance from the axis of rotation.

Several limiting assumptions are inherent in Stokes' equation and should be noted (61). They are:

1. The sedimenting particle must be spherical in shape.

2. An infinite particle dilution must exist.
3. The Reynolds number for viscous flow based on the sedimentation velocity and particle diameter must be less than 1.
4. The effect of Coriolis forces must be negligible.

For blood applications where microscopic particles are separated in a liquid medium, Reynolds numbers are always less than 1 and Coriolis effects are completely negligible (64, p. 46). Therefore, assumptions 3 and 4 are maintained. On the other hand, assumptions 1 and 2 do not always hold true for application to settling blood cells. The erythrocytes deviate significantly from a spherical shape. Also, the cellular components of the blood are far from being in an infinitely dilute suspension.

The above problems can be accounted for, however, by modifying the Stokes' equation. Sedimentation of the oblong erythrocyte for instance can be modeled by introducing a shape factor or friction ratio θ (61):

$$\theta = f/f_o \qquad (3)$$

In the above expression, f is the frictional coefficient of a blood cell and f_0 is the frictional coefficient for a sphere of equal volume. For an erythrocyte the friction ratio can be approximated as that for an oblate elipsoid, expressed as a function of the width of the major and minor axis for the elipsoid (61, 65, 66).

$$f/f_0 = \frac{(b^2/a^2 - 1)^{1/2}}{(b/a)\,2/3\ \tan^{-1}\ (a^2/b^2 - 1)^{1/2}} \qquad (4)$$

where: a = major axis (cell diameter)

b = minor axis (cell width)

Stokes' law now becomes:

$$S_t = \frac{2}{9}\ \frac{r^{2(\rho_i - \rho_f)}\ \omega^2\ r_c}{\mu\theta} \qquad (5)$$

which can be written as:

$$S_t = S_o\ \omega^2\ r_c \qquad (6)$$

Where S_o is defined as the sedimentation coefficient, i.e.:

$$S_o = \frac{2}{9}\ \frac{r^2\ (\rho_i - \rho_f)}{\mu\theta} \qquad (7)$$

From the equations developed, sedimentation theory can be compared to experimental results in actual centrifugation processes at least for dilute particle suspensions. However, in blood separations the application of Stokes' sedimentation relationship appears to have some slight inaccuracies even in dilute suspensions (67). Some of the inaccuracies can be attributed to the fact that shape factors for blood cellular components are not exactly known, and to the fact that cell size and density not only vary slightly from individual to individual, but depend upon age, cellular environment, and measurement technique (68, page 69, 69, 72). However, even with all of the inaccuracies, Stokes' Law still provides an understanding of sedimentation theory and can be used to determine guidelines for centrifuge design.

Sedimentation rates for higher concentrations of particles can be studied by using modifications of Stokes' Law proposed by Vand and Hawksley(70). Vand's studies (71) dealt with the use of viscosity data to predict the characteristics of molecules in solution. Vand extended a theoretical formula obtained by Einstein (61) which described the speed of falling particles having very small densities and separated by large distances relative to their size. Einstein's formula for sedimentation velocity

is based on suspension viscosity predicting the settling rate S_E as:

$$S_E = S_t (1 - \alpha C) \qquad (8)$$

where: S_t = Stokes' terminal velocity

α = 2 for hard spheres

C = volume concentration

In essence, Vand extended Einstein's theory to higher particle concentration by taking into account the following two effects (70):

1. The effect of the presence of fluid velocity perturbations of nearby particles on each other plus higher-order interactions between the particles and the velocity perturbations.
2. The occurrence of interparticle collisions.

Hawksley (73) used Vand's theory to describe the behavior of fluidized beds consisting of single particulate species. He theorized that a particle in a fluidized bed settled according to Stokes' Law with certain modifications. The modifications were as follows:

1. He replaced the fluid viscosity with Vand's suspension viscosity neglecting

the corrections due to particle collisions.

2. He replaced the fluid density with the mean suspension density.

Using this analysis, Hawksley found his theory to be in good agreement with experimental results.

The Hawksley-Vand theory was extended to suspensions of two or more particles by Breillatt, Remenyik, and Sartory (70) of Oak Ridge National Labs. They applied Hawksley's postulations to all particles regardless of species. The same suspension viscosity was used for all particles. When applied to two or more particles the Hawksley-Vand theory leads to the following equation:

$$\tilde{V}_i = S_i \omega^2 r_c \left(\frac{\rho_i - \bar{\rho}_{susp}}{\rho_i - \rho_f} \right) \exp\left(- \frac{4.1 \text{ HCT}}{1.64 - \text{HCT}} \right) \qquad (9)$$

where: $\tilde{V}_i$ is the sedimentation rate for component i,

S_i is the Stokes' sedimentation coefficient for the ith species,

$\bar{\rho}_{susp} = (\sum_i^n C_i \rho_i) + C_f \rho_f$ is the volume-mean suspension density

C_i is the volume fraction of the ith species

C_f is the volume fraction of the suspending fluid

ρ_i is the density of the ith species.

HCT is the hematocrit or red cell concentration.

As the particle concentration becomes very dilute, the Hawksley-Vand sedimentation velocity (equation (9)) will revert to the Stokes' sedimentation velocity (equation (6)).

3.1.2 Implications of Previous Developments

When whole blood is allowed to stand in a test tube (Figure 3), gravity will cause the various blood fractions to eventually settle into respective layers. The higher density red blood cells tend to adhere to each other forming what's referred to as rouleau, (Figure 3) and will sediment to the bottom of the test tube. A lower density buffy coat layer containing leukocytes (WBC's) and platelets will appear immediately above the erythrocyte layer, and a plasma layer containing mineral salts, carbohydrates, lipids, proteins and hormones will appear on top (44). The entire sedimentation process may be speeded up by imposing an increased effective gravitational force through centrifugation processes.

The above sedimentation behavior can be characterized by applying the Hawksley-Vand modification of the Stokes' equation to the individual blood cellular species. To do this the physical characteristics such as cell radii, densities sedimentation coefficients plasma viscosity and suspension densities must be either determined or found from the literature. Physical

Figure 2. Gravity Sedimentation in a Test Tube. Whole blood allowed to stand for several hours in a test tube will sediment into several well defined layers. Red cells (erythrocytes) will tend to aggregate forming red cell rouleau. Because the rouleaux have the largest effective radius of the blood cellular components and the red cells have greater density than the other cellular components, the red cells will form a layer at the bottom of the test tube. The WBC's (leukocytes) and platelets having lower densities and smaller radii will form a layer immediately above the concentrated red cell layer. Plasma having a lower density than any of the cellular components will form a layer at the top of the test tube.

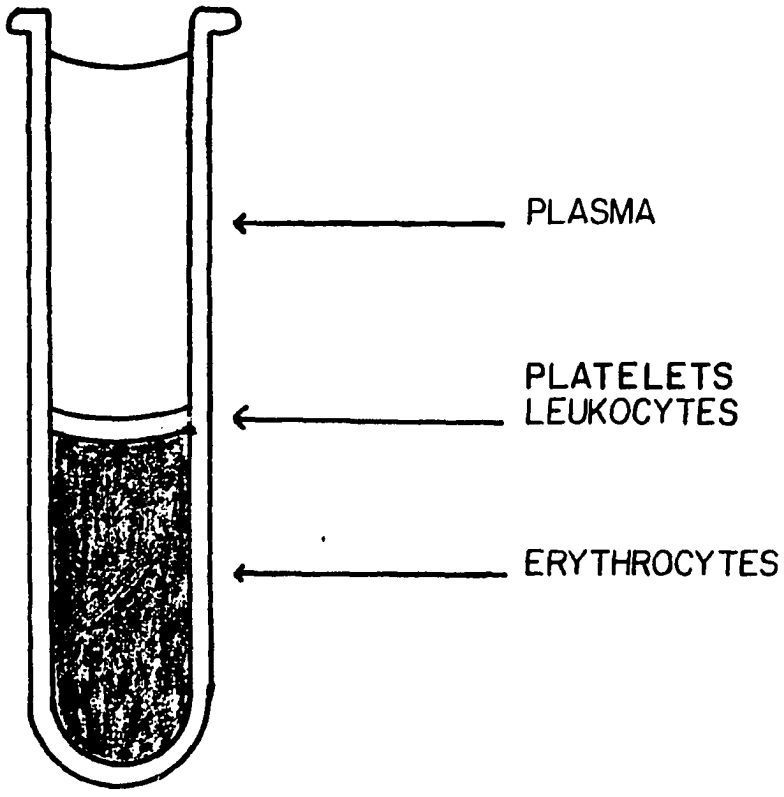

Figure 2

Figure 3. Rouleau Formation. An attractive force between red cells exists causing them to form aggregates referred to as rouleau. This attractive force is believed to be caused by positive and negative electrical charges of adsorbed plasma proteins (74). The attractive force is weak enough so that rouleau will not form until the shear stress due to blood flow is very low.

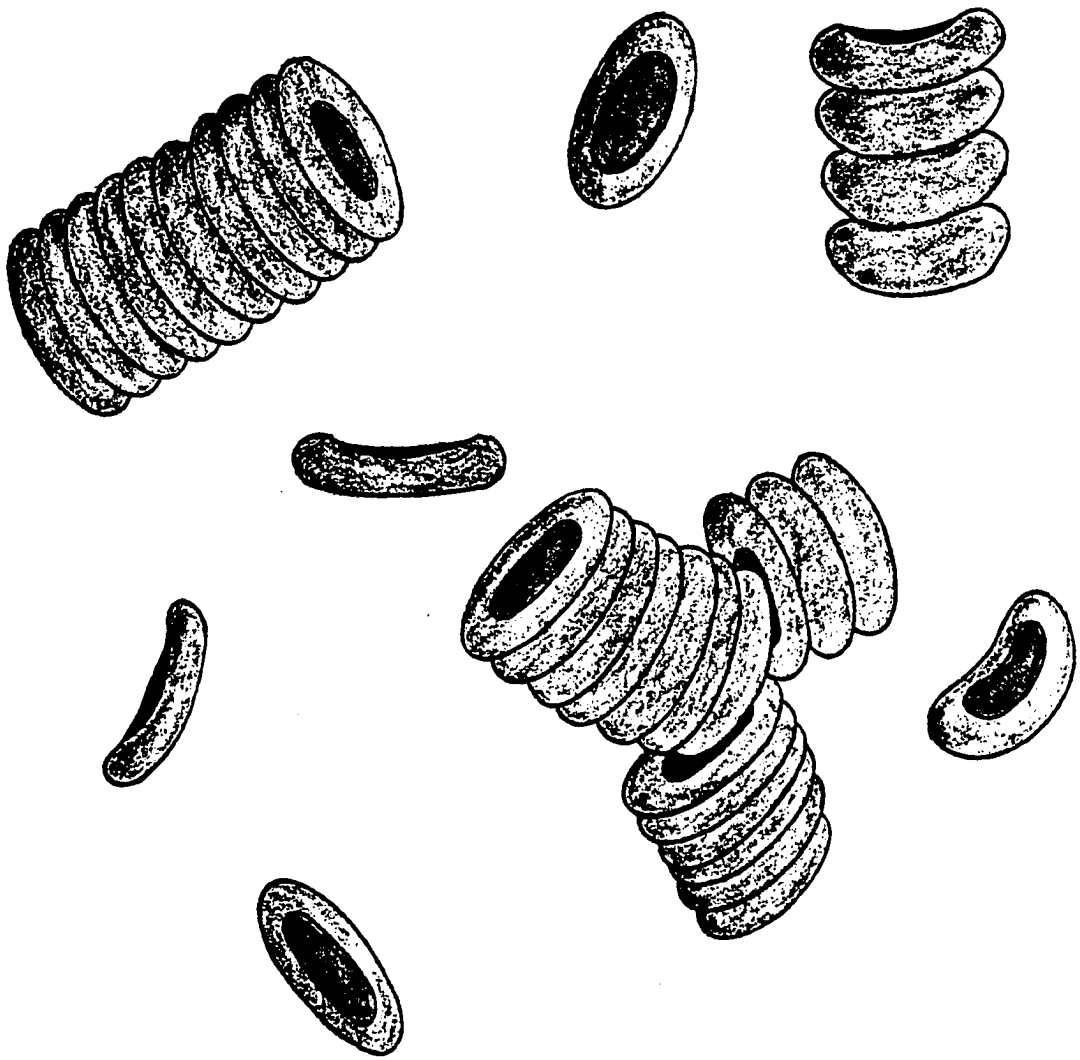

Figure 3

characteristics found in the literature for cell densities and radii (75, 76) and plasma viscosity (77) are listed in Table 2. The Stokes' sedimentation coefficients for human RBC's and WBC's were arrived at experimentally (78), while the value for platelets was calculated from equation (5). The experimental values are more reliable for the RBC rouleau and WBC's since the shape factors used in equation (4) can only be approximated (61).

An approximate sedimentation coefficient for platelets can be obtained by determining a corresponding spherical radius (61) and assuming a shape factor of 1.0 (75, 79). The suspension density may be determined as indicated previously in equation (9). For a normal average hematocrit of 45 percent the suspension density may be determined as follows:

$$\rho_{susp} = C_{RBC}\ (\rho_{RBC}) + C_p\ (\rho_p)$$

$$= 0.45\ (1.093) + 0.55\ (1.026)$$

$$= 1.056\ gm/cm^3$$

Values for sedimentation rates of RBC's, WBC's and platelets over the full range of hematocrits from 0 to 100% appear in Table 3 for a centrifuge chamber located at 10cm from the center of rotation and rotating at 1500 rpm. Also appearing in the table is the relative difference between red cell and white cell sedimentation

Table 2

Physical Characteristics of Blood Components*

	$\rho(gm/cm^3)$	$r(cmx10^4)$	$S_o(sec \times 10^7)$	$\mu(Px10^2)$
RBC	1.093	3.75	12.0 '#	--
WBC	1.066	5-7.5	1.2#	--
PLATELET	1.053	1.19+	.032++	--
PLASMA	1.026	--	--	2.6

* all values except where otherwise indicated were found in the literature (75,76, 77.)

values arrived at through experimental analysis (78)

+ corresponding spherical radius for a sphere having a volume equivalent to that of the cellular component

++calculated sedimentation coefficient based on the corresponding spherical radius and a shape factor of 1.0 (75,79)

Table 3

Sedimentation Velocities for RBC's, WBC's and Platelets at 1500 RPM

HCT (% RBC's)	ρ_{susp} (gm/cm^3)	$\tilde{V}_R$ (cm/min)	$\tilde{V}_W$ (cm/min)	$\tilde{V}_P \times 10^2$ (cm/min)	$\tilde{V}_R - \tilde{V}_W$ (cm/min)
0	1.026	17.765	1.777	4.737	15.988
2.5	1.028	16.175	1.584	4.116	14.591
5.0	1.029	14.917	1.444	3.701	13.473
7.5	1.031	13.507	1.277	3.171	12.230
10.0	1.033	12.190	1.123	2.689	11.067
15.0	1.036	10.003	0.882	1.974	9.121
20.0	1.039	8.102	0.679	1.390	7.423
25.0	1.043	6.342	0.489	0.839	5.853
30.0	1.046	4.977	0.355	0.490	4.622
35.0	1.049	3.836	0.248	0.231	3.588
40.0	1.053	2.826	0.154	0.000	2.672
45.0	1.056	2.081	0.0942	-0.117	1.987
50.0	1.059	1.493	0.0515	-0.174	1.442
55.0	1.063	1.005	0.0168	-0.222	0.988
60.0	1.066	0.672	0.0000	-0.214	0.672
65.0	1.069	0.431	-0.0090	-0.190	0.440
70.0	1.073	0.250	-0.0147	-0.166	0.265
75.0	1.076	0.142	-0.0140	-0.127	0.156
80.0	1.080	0.069	-0.0125	-0.0954	0.082
85.0	1.084	0.029	-0.0097	-0.0660	0.039
90.0	1.086	0.013	-0.0061	-0.0395	0.019
95.0	1.090	0.003	-0.0038	-0.0229	0.0068
100.0	1.093	0.000	-0.0020	-0.0116	0.0020

velocities which can later be used in determining the most ideal operating HCT for separating red and white cells. From Table 3 it is noted that at a normal average 45 HCT the sedimentation rate of the platelet has a negative value which indicates that the bouyant effect of the suspension density is greater than the effect of the centrifugal "pull" upon the cell.

It is also noted from the table that the red cell sedimentation rate is more than 20x's that of the white cell. Because of this the red cell rouleau will settle much more quickly displacing plasma as the red cells become packed. Plasma moving upwards because of displacement has a tendency to pull along many of the slower settling WBC's and platelets. WBC's and platelets will not continue to be carried by the upward moving plasma once a more dilute region is reached from which many of the red cell rouleau have already settled. Once in more dilute regions it is noticed from Table 3 that WBC as well as platelet sedimentation velocities are increased. This increase is due to a lower suspension density as well as a reduction in cell-cell interactions which normally would hinder sedimentation. Thus, these WBC's and platelets end up forming a layer which rests upon the more dense, packed red cell layer and is called the buffy coat. Figure 4 illustrates graphically the sharp increase in sedimentation velocity for cell species at lower HCT's.

Figure 4. Cell Sedimentation Velocites as a Function of HCT. Cell sedimentation velocities are shown to decrease dramatically with increasing HCT due to hindered settling caused by cell-cell interactions. At particular points WBC and platelet sedimentation velocities are shown to be negative. This is partly due to the density of these species relative to the average density of the surrounding blood and partly due to the upward flow of displaced plasma.

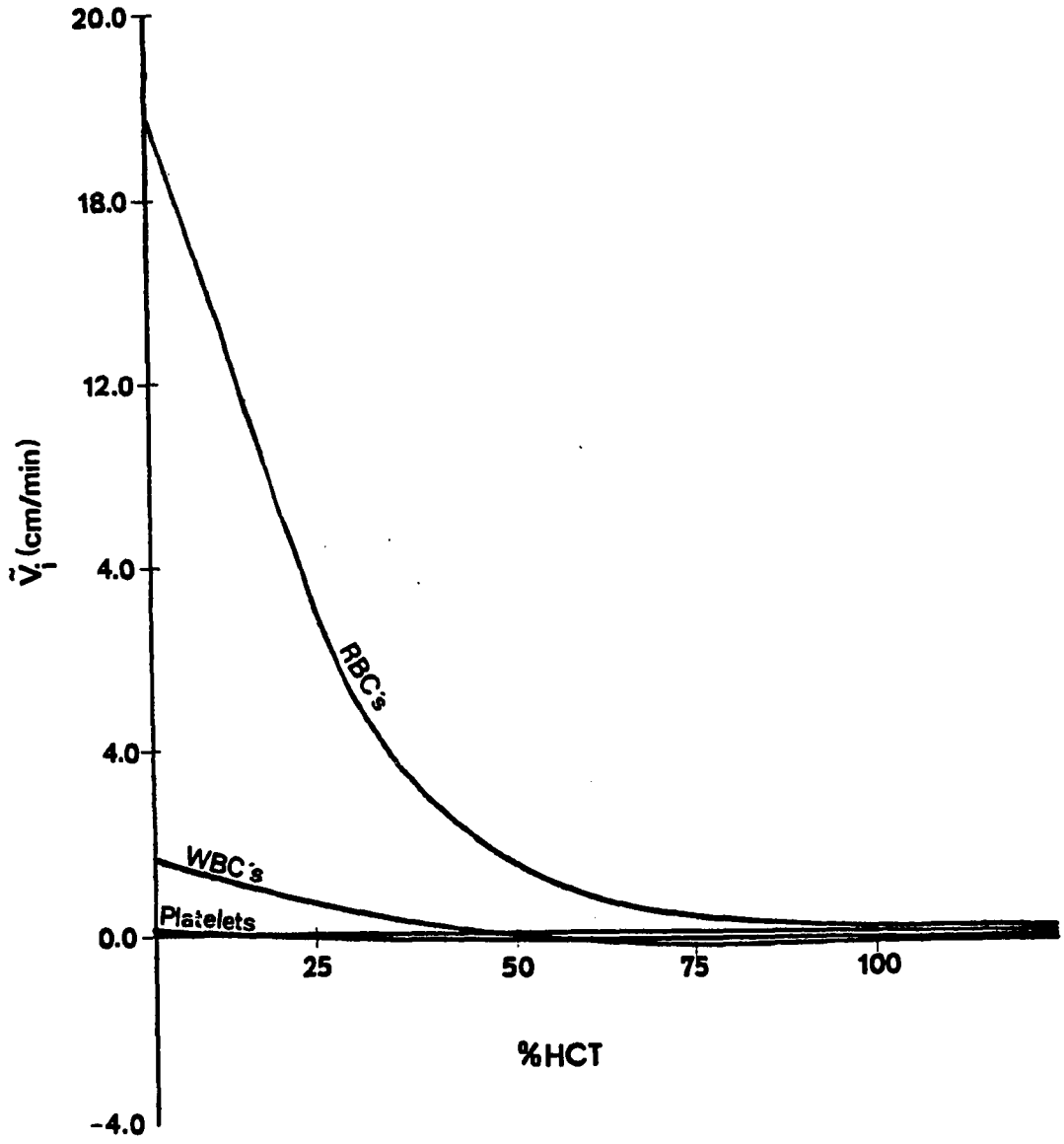
20.0
18.0
12.0
4.0
4.0
0.0
-4.0
$\tilde{V}_i$ (cm/min)
RBC's
WBC's
Platelets
25
50
75
100
%HCT

Figure 4

An interesting implication of the information contained in Table 3 and Figure 4 is that if it were desired to separate plasma from the other cellular species it would be best to do it at the lowest possible HCT since this is where sedimentation velocities appear to be largest.

Another important implication of the information is that if it is desired to optimize red and white cell separations, the process should also be performed at lower HCT's where the relative difference between red and white cell sedimentation velocities is the greatest. Figure 5 shows the marked increase in the relative sedimentation velocity difference for red and white cells. Most centrifugal separation schemes, however, process blood at the HCT at which it is obtained from the patient. The above analysis would indicate that dilution of the patient blood before processing would expedite separation procedures.

3.2 EFFECTS DUE TO DEGREE OF ROULEAU FORMATION

3.2.1 Extension of Previous Experimental Work

Up until this time little consideration has been given to the processing of blood at lower HCT's. Sartory recommends the processing of blood at a reduced hematocrit of 20% in one of his patented processes (80). His reasoning is indeed based on the fact that the highest red cell separation rate occurs at this lower HCT. Despite Sartory's finding no serious effort appears

Figure 5. Difference Between Red and White Cell Sedimentation Velocities. Since white cells are predicted to have a lower settling velocity than red cells the two can be separated by adjusting fluid velocity in the "upward" direction so that it is of an intermediate velocity between the "downward" sedimentation velocities of the two cell types. This is easiest to do when the difference between the RBC and WBC sedimentation velocities is at a maximum. Therefore one can conclude from this figure that red and white cell separation can be best performed at very low HCT's.

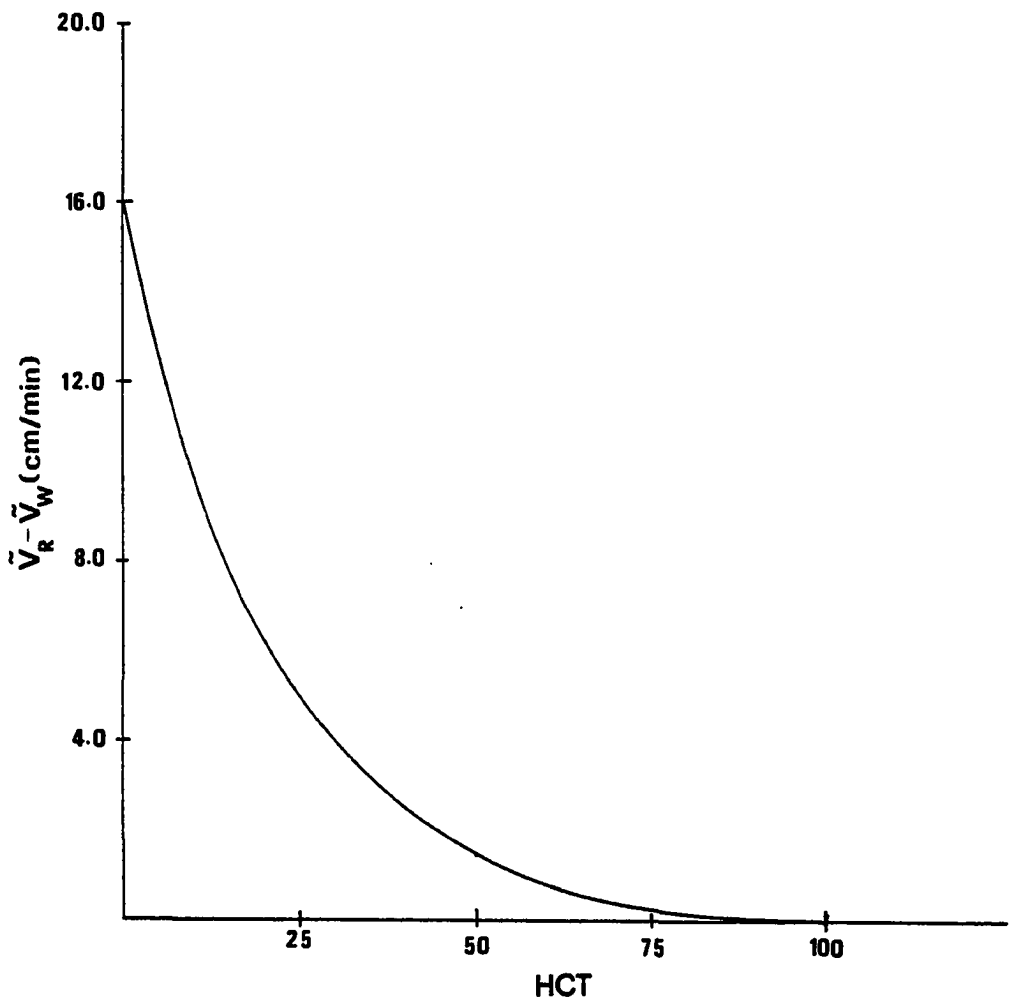

Figure 5

to be underway with major blood centrifugation research groups to critically study the separation at lower HCT's.

Another question one might raise about the above discussion is why Sartory did not find even greater red cell separation rates at even lower HCT's. The best explanation which can be offered for this is that red cell rouleau size tends to decrease at lower HCT's. A decrease in rouleau size causes a decrease in the effective radius. Since sedimentation velocity is dependent upon the square of the effective radius one would expect a corresponding drop in sedimentation velocity for the red cells. Figures 4 and 5 assume that rouleau size is constant. However, in actuality one would expect the formation of rouleau to depend upon the frequency of cell-cell interactions. In turn cell-cell interaction frequency would be expected to depend upon cell concentration as well as cell mobility. Kernick has indeed demonstrated the above to be the case (81). He performed experiments with diluted blood stirred at a shear rate of 2 sec^{-1} as recommended by Ponder (82) to provide sufficient mixing for cells to collide and form rouleau. Too high a shear rate on the other hand has a tendency to break up rouleau as demonstrated by Goldsmith (83). Kernick found that the greatest degree of rouleau formation appeared at shear rates between 0.5 and 3.5 sec^{-1} centered at 2 sec^{-1}. This is in

agreement with statements made by Sartory where he feels that shear rates above 5 sec^{-1} will begin to cause the breakup of rouleau (80), thereby reducing sedimentation velocities of the rouleau aggregates. Kernick used mean rouleau length, MRL, (Σ cells/Σ rouleau) as an index for rouleau formation. He found that MRL varied linearly with HCT, at least at concentrations below 4%. Kernick found his data to fit a straight line over the range of HCT from 0 to 4%. An equation which fits his data is given as follows:

$$MRL = 1.54\ (HCT) + 1.0 \qquad (10)$$

Above an hematocrit of 4% it is well known that secondary rouleau formation begins to occur where side contacts to the linear rouleau aggregate are established (84). Where these more random rouleau aggregates begin to occur equation (10) begins to loose its accuracy. However, one can use the analysis by Kernick to demonstrate qualitatively the effect of rouleau size on the sedimentation velocity over the full range of HCT's.

In order to apply equation (10) to sedimentation rates, sedimentation coefficients must be determined based on effective radius of the rouleau aggregate. To do this the volume of the rouleau aggregate is determined as follows:

$$V_r = \pi r_r^2\ t\ (MRL) \qquad (11)$$

where V_r = volume occupied by rouleau (μ^3)

r_r = radius of a red cell (μ)

t = thickness of a red cell (μ)

Next an equivalent radius is found based on a sphere having the same volume as the above calculated volume as follows:

$$r_{eq} = \sqrt[3]{3V_r 4\pi} = \sqrt[3]{(3/4) r_r^2 \; t \; (MRL)} \qquad (12)$$

The above equivalent radius is then used to derive a sedimentation coefficient based on the degree of rouleau formation.

A relationship between MRL and sedimentation coefficient appears below:

$$S_R = (2/9)((3/4) r_r^2 \; t \; MRL)^{2/3} (\rho_r - \rho_f)/\mu \qquad (13)$$

Taking values of $3.75 \times 10^{-4}\mu$ for r_r, $2.4 \times 10^{-4}\mu$ for t (84), 1.093 gm/cm^3 for ρ_r, 1.026 gm/cm^3 for ρ_f and 0.026 gm/cm-sec for μ the following formula is arrived at:

$$S_R = (1.0969 \times 10^{-11} (MRL)^{2/3} \qquad (14)$$

Equation (14) can in turn be substituted into the Hawksley-Vand equation to give sedimentation velocities based on rouleau size. If Kernick's analysis were used

to give approximate values for S_R, the equation for sedimentation velocity for RBC's would appear as follows:

$$\tilde{V}_R = 7.37\times10^{-7}(154C+1)^{2/3}\,\omega^2 r_c(1.093-\rho_{susp})\,\exp\,(-4.1C/(1.64-C)) \qquad (15)$$

where C is the concentration of RBC's.

3.2.2 Implications of Theoretical Development for Degree of Rouleau Formation

Although Kernick's analysis does not take into account secondary rouleau formation it still can predict sedimentation coefficients within 25-30% of the average normal values for 45% HCT. This degree of accuracy although not sufficient for precise predictions at HCT's above 4%, will still give a good qualitative analysis of how sedimentation velocities vary with HCT. Values for red cell sedimentation velocities based on equation (15) appear in Table 4. WBC sedimentation velocities based on the Hawksley-Vand equation as well as the relative difference between red and white cell sedimentation velocities also appear in the table. These values are represented graphically in Figure 6.

Although the representation in Figure 6 is only qualitative above 4% HCT, the analysis below 4% HCT would be expected to be quite accurate since it is in the low HCT region that the degree of rouleau formation has been well analyzed. This is also the region where corrections for cell-cell interactions and suspension density effects are minimal in the Hawksley-Vand equation.

Table 4

Effect of Degree of Rouleau Formation on Red Cell Sedimentation Velocities and Difference Between Red and White Cell Sedimentation Velocities

$$\tilde{V}_R = 7.37\times10^{-7}\ (154\ C + 1)^{2/3}\ \omega^2 r_c\ (1.093-\rho_{susp})\ \exp\ (-4.1\ C/(1.64-C)$$

$$\tilde{V}_W = 3.0\times10^{-6}\ \omega^2 r_c\ (1.066-\rho_{susp})\ \exp\ (-4.1\ HCT/(1.64-HCT)$$

HCT	ρ_{susp} (gm/ml)	$\tilde{V}_R$ (cm/min)	$\tilde{V}_W$ (cm/min)	$\tilde{V}_R - \tilde{V}_W$ (cm/min)
0	1.026	0.731	1.777	-1.039
1.0	1.027	1.307	1.690	-0.383
2.0	1.027	1.747	1.647	0.10
2.5	1.028	1.907	1.584	0.323
5.0	1.029	2.596	1.444	1.157
7.5	1.031	3.001	1.277	1.724
10.0	1.033	3.237	1.123	2.114
15.0	1.036	3.433	0.882	2.551
20.0	1.039	3.345	0.679	2.666
25.0	1.043	3.026	0.489	2.537
30.0	1.046	2.673	0.355	2.318
35.0	1.049	2.279	0.248	3.031
40.0	1.053	1.833	0.154	1.679
45.0	1.056	1.459	0.094	1.365
50.0	1.059	1.121	0.052	1.070
55.0	1.063	0.804	0.017	0.787
60.0	1.066	0.569	0.000	0.569
65.0	1.069	0.385	-0.009	0.394
70.0	1.073	0.235	-0.015	0.250
75.0	1.076	0.140	-0.014	0.154
80.0	1.080	0.071	-0.013	0.084
85.0	1.084	0.031	-0.010	0.041
90.0	1.086	0.014	-0.006	0.020
95.0	1.090	0.003	-0.004	0.007
100.0	1.093	0.000	-0.002	0.002

Figure 6. Effect of Rouleau Size on Sedimentation. Since sedimentation velocities are a function of particle size they will be affected by the effect of HCT on the degree of rouleau formation. Mean rouleau length is very small at low HCT's and thus sedimentation velocities will be correspondingly lowered for RBC's as shown by the figure. Although rouleau size will be largest at high HCT's, cell-cell interaction hinders sedimentation enough to drastically reduce sedimentation rates in these regions. Thus a maximum sedimentation rate is predicted for red cells at some intermediate HCT. The difference between red and white cell sedimentation velocities also shows a maximum at an intermediate HCT and therefore optimum red and white cell separations is expected to occur at this HCT. Red cell sedimentation velocities based on approximate literature values for sedimentation coefficients also appear on the figure(80).

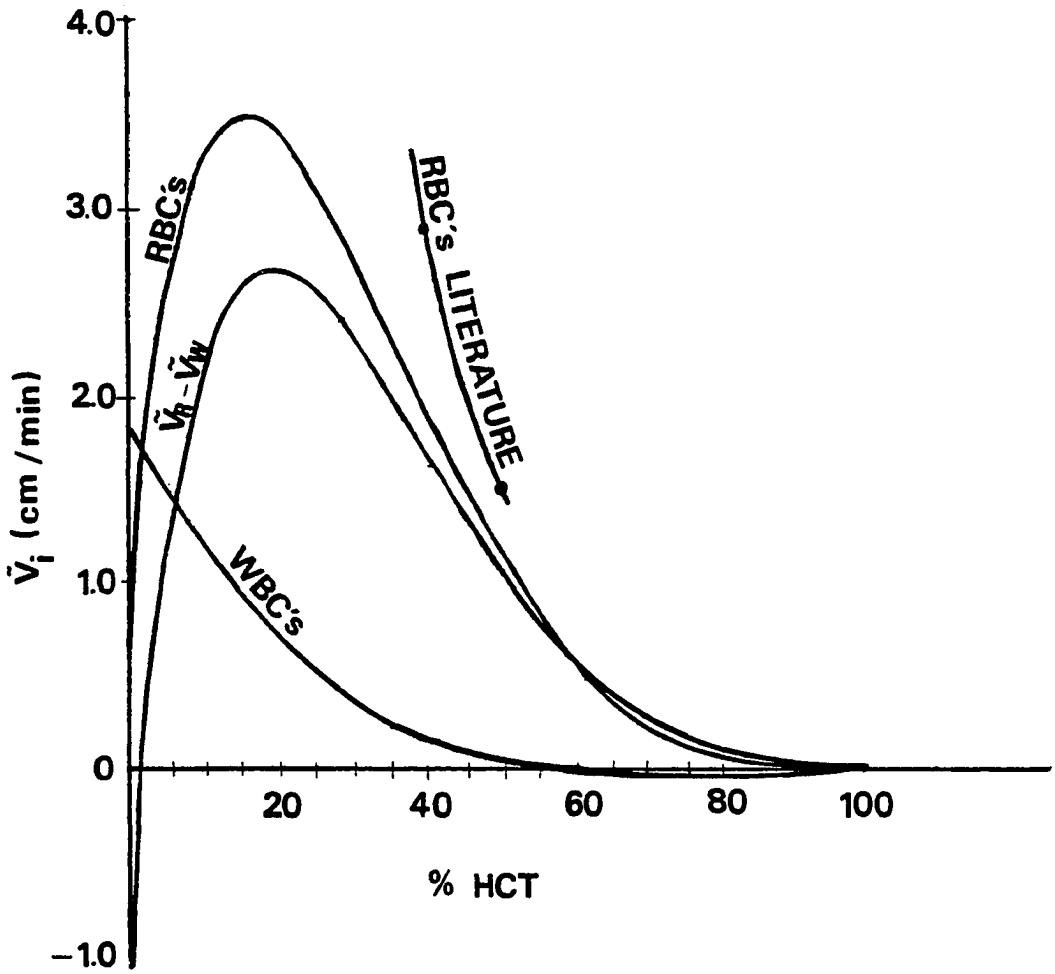
4.0
3.0
2.0
1.0
0
−1.0
$\tilde{V}_i$ (cm /min)
RBC's
$\tilde{V}_R - \tilde{V}_W$
WBC's
RBC's LITERATURE
20
40
60
80
100
% HCT

Figure 6

Both the low HCT region of Figure 6 and the higher HCT region where the analysis is more qualitative prove to be quite interesting. At low HCT's there is a point just below 2% HCT where red cell sedimentation velocity is equal to the white cell sedimentation velocity. Therefore at this particular concentration the separation of WBC's from RBC's would be impossible to perform in processes that are dependent upon sedimentation velocities for separation. Separation in this region of concentration is analogous to azeotropic conditions in chemical separation processes.

Note that below this particular concentration sedimentation velocities for red cells are actually less than those of white cells. This phenomenon has been taken advantage of by Sartory in one of his patented designs where low HCT blood is passed through a region of high shear rate to break up existing rouleau (62). This causes the white cell to become the component with a higher settling rate, allowing white cells to be harvested at the outermost diameter of a centrifugal separation chamber rather than red cells.

The more qualitative analysis at higher hematocrits reveals a maximum red cell sedimentation velocity at about 15% HCT. The curve for the difference in white and red cell sedimentation velocities reveals a maximum value at a HCT of about 20%. Taking into

account the effects of secondary rouleau formation would probably shift these maximums somewhat to the right due to an increase in the values for effective radii of the rouleau aggregates. The shifting to the right would not be too extreme, however, since cell-cell interactions and density effects have been shown to cause drastic reductions in sedimentation velocities with increasing hematocrit. This statement can be verified by looking at sedimentation velocities calculated using known average normal sedimentation coefficients for the 35-50% HCT region which have been verified experimentally (80). A curve for these values appears on Figure 6 labeled as RBC's LITERATURE. Based on the location of this curve, the maximum values for RBC sedimentation velocity, $\tilde{V}_R$, and for the difference, $\tilde{V}_R - \tilde{V}_W$, would probably not be shifted by more than 5-10%.

3.2.3 Conclusions from Above Analysis

The overall intent of the above qualitative analysis is to demonstrate that if separation efficiency is based on either maximum $\tilde{V}_R$ or maximum $\tilde{V}_R - \tilde{V}_W$, the effect of varying the HCT cannot be overlooked. If maximum red cell separation rate were the primary objective in the above analysis, feed blood should be diluted to a HCT of 15%. On the other hand if maximum separation between red and white cells is desired the most efficient operation of the process would probably be attained with feed blood of 20% HCT.

In all practicality it may be difficult to obtain accurate values for red and white cell sedimentation velocities for a given experimental process. One could, however, optimize on red cell throughput over the full range of HCT for maximum red cell separation rates. Or one could optimize on the difference in fractional recoveries (fraction of feed cells recovered in various process streams) for the red and white cells over the full range of HCT. As previously mentioned, Sartory optimized on red cell throughput in one of his patented devices for white cell harvesting (80). He found that the maximum red cell throughput occurred at 20% HCT.

Sartory viewed red cell throughput as one of the most important factors for determining optimum efficiency for operating a device designed to separate red and white cells. As revealed by Figure 6, however, the region for most efficient red and white cell separation based on relative difference in sedimentation velocities may occur at a different HCT. In reality one must weigh the effect of operating at a slightly higher value for the difference in fractional recoveries for red and white cells with operating at a slightly higher red cell throughput. Operation at higher red cell throughput will require less time for the processing of a given volume of blood, because shorter residence times are required for

separation. If separation efficiency between red and white cells can be appreciably increased, however, it may take less time to separate and collect a desired number of white cells at the point of maximum red and white cell fractional recovery difference even though red cell throughput is lower.

Another consideration to take into account is that each separation chamber design will affect blood process streams differently with respect to shear rates. Since rouleau size is also a function of shear rate each design should be run over varying flow conditions as well as over the full range of hematocrits.

3.3 APPLICATION TO CONTINUOUS FLOW PROCESSING

3.3.1 Previous Developments

Although separation chamber types are many and varied for continuous flow processing, a qualitative discussion of the general principles of separation will provide a good understanding of the major factors involved. For this discussion an analysis will be performed on a radial flow separation chamber.

A volume element of the radial flow centrifuge appears in Figure 7. Whole blood containing RBC's, WBC's, platelets, and plasma is fed to the centrifuge at an intermediate point between the innermost and outermost radii. Under a centrifugal force field, the blood is then separated into various fractions exiting

Figure 7. Volume Element for the Radial-Flow Centrifuge. The volume element depicting steady state separations in the radial-flow situation is divided up into regions illustrating the sedimentation layers formed within the centrifuge head. Positions for feed blood and for harvesting of specific cellular components are also illustrated. The letters R, W and P represent specific cellular components i.e., red cells, white cells and platelets respectively. (This figure is a modification of one found in: "Blood Cell Separator Development for In-Vivo Leukapheresis: A Critical Analysis," Breillatt, J.P., Remenyik, C., Sartory, W.K., Oak Ridge National Laboratory Contract No. W-7405-eng-26, Oak Ridge, Tennessee, 1972).

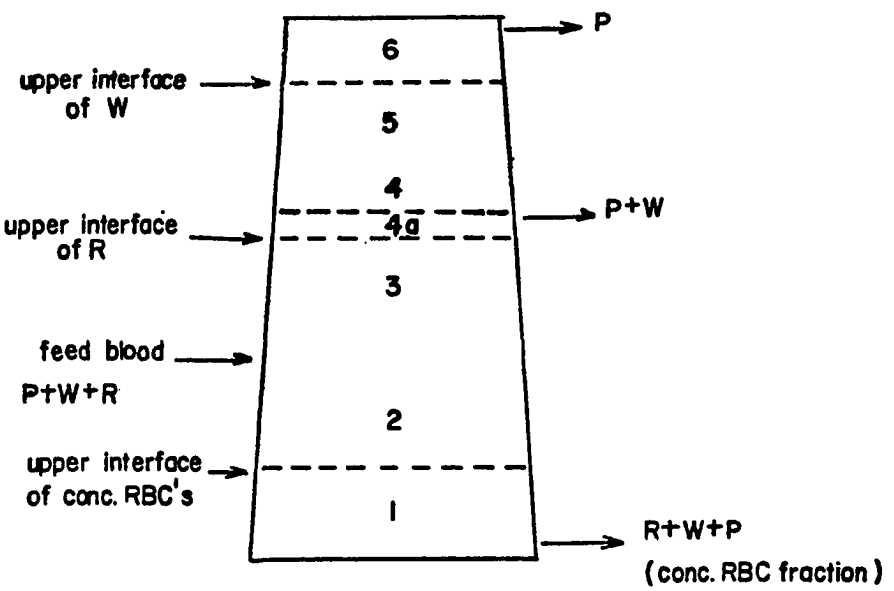
P
6
upper interface of W
5
4
P+W
upper interface of R
4a
3
feed blood
P+W+R
2
upper interface of conc. RBC's
1
R+W+P
(conc. RBC fraction)

Figure 7

from the right of the figure. Discontinuities appear within the volume element at interfaces separating different sedimentation layers. These discontinuities correspond physically to an upper interface for suspended white cells and platelets, possibly an interface for the buffy coat, a red blood cell interface and a concentrated red blood cell interface.

The volume element is also divided into regions as follows:

Region 1: Consists of concentrated RBC's with low concentrations of WBC's, plasma and platelets;

Region 2: Consists of RBC's, WBC's and platelets settling downward towards the concentrated region;

Region 3: Consists of RBC's suspended in upward moving plasma (Note that the plasma carries along particles having lower sedimentation rates which will be washed up across the RBC interface);

Region 4: Consists of WBC's and platelets moving upwards with the plasma;

Region 4a: Exists only if the WBC and/or other

particle sedimentation rate(s) increase(s) beyond the supercritical velocity of the plasma once the RBC interface is crossed (this effect may indeed occur since the particle concentration is now low and particles will essentially settle independently of each other);

Region 5: Consists of WBC's and platelets suspended in upward moving plasma;

Region 6: Consists of either pure plasma or plasma containing particles having very low sedimentation velocities.

Beginning with an analysis of Region 3, the plasma flow-rate upwards must be properly adjusted so that the RBC's will not be washed "upwards" with the plasma. Instead RBC's should sediment "downwards" towards the outermost radius of the volume element. Therefore, plasma flow-rate per cross-sectional area (superficial velocity) must not surpass the sedimentation velocity of the red blood cells. Maximum plasma flow-rate occurs when the

plasma superficial velocity just equals the RBC sedimentation velocity.

The upward flux of WBC's and platelets across the RBC interface is found by subtracting the sedimentation rate from the superficial plasma velocity and multiplying that quantity by the concentration of the species of interest in Region 3 as follows:

$$(V_{p,3} - \tilde{V}_{i,3})\ C_{i,3} \tag{16}$$

where $V_{p,3}$ = the plasma superficial velocity in Region 3,

$\tilde{V}_{i,3}$ = the sedimentation velocity of species i in Region 3.

$C_{i,3}$ = the concentration of species in Region 3.

The fraction of species i, f_i, crossing the interface is equal to the ratio of the upward flux of i to the feed rate of i:

$$f_i = \frac{(V_{p,3} - \tilde{V}_{i,3})\ C_{i,3}}{FC_{i,F}} \tag{17}$$

where F is the feed stream volumetric flow rate divided by cross-sectional area.

Before continuing with the analysis, the limitations which are inherent in equation (17) should be briefly discussed. The purpose of the equation is to provide a basis for analyzing the component forces upon a cell contributing to its capacity to be separated. For this analysis the major contributing forces are assumed to be the "upward" flow of displaced plasma and the "downward" pull of centrifugal force. Note, however, for these assumed forces to be the only contributing forces the separation process must be precisely controlled so that the only "downward" flow is due to settling cellular components and the only "upward" flow is due to displaced plasma. In reality there may be additional imparted flows either in the "downward" or "upward" directions due to system pumps.

Another limitation of equation (17) is that if assumes a constant concentration of cellular species within region 3 when in reality there will be a concentration gradient. Nevertheless equation (17) can be used to aid in approximating fractional recoveries in order to get a qualitative picture of expected cell separation capabilities. From this qualitative picture an investigator can determine a range of HCT's over which optimum cell separations might be expected. Then experimental operating conditions can be adjusted to test processes over the proposed range of HCT's.

Sedimentation velocities as a function of HCT as determined in Table 4 can be used to analyze the radial volume element in the various regions. First it is necessary to determine which regions are of greatest importance for the analysis. Region 4a cannot be critically analyzed using the previous equations for the following reasons: 1) It contains highly concentrated WBC's for which cell-cell interaction behavior has not been well studied. 2) The cell-cell interaction behavior developed for the Hawksley-Vand equation is not applicable since it defines how red cell interactions affect sedimentation and not white cell interactions. 3) The plasma concentration in the buffy coat has not been well studied. Region 4a however, is not of critical importance for analyzing the separation process since it is merely an accumulation of cells which have already been separated.

Region 1 contains cells which will undergo little or no further sedimentation since they are already highly concentrated. Although in reality there will be a continuous concentration gradient across regions 1, 2, and 3, one can use the feed concentration for the blood to region 3 in order to estimate the degree of separation which will occur in the radial volume element. In this case an estimate of the degree of separation will suffice since sedimentation equations used in Table 4 only give

qualitative predictions for sedimentation velocities. Sedimentation velocities in regions 4, 5 and 6 will be equivalent because cells in these regions are at very low concentrations and therefore the equation for the sedimentation velocity becomes independent of particle concentration (ie: Hawksley-Vand equation reduces to the Stokes' equation).

Knowing the sedimentation velocities based on the HCT's for the various regions, the behavior of the components in those regions can be analyzed. As previously stated the plasma flow rate per cross-sectional area should not surpass the sedimentation velocity for the red blood cells. From Table 4, for an example case of 45 HCT blood fed to a radial chamber the maximum superficial velocity is determined as follows:

$$V_{P,3} = \tilde{V}_{R,3} = 1.459 \text{ cm/min}$$

With this plasma superficial velocity the maximum separation of plasma from RBC's can be achieved. From equation (17) one can also see that as the feed stream flow rate is minimized the fraction of component i carried across the red cell interface into region 4 is maximized. Feed stream flow rate is minimized when virtually all of the plasma coming in with the feed stream passes upwards through region 4. The minimum feed rate per cross sectional area is found when:

$$FC_{P,F} = V_{P,3} \tag{18}$$

For the above example where $C_{P,F} = 0.55$ (plasma concentration per unit volume) and $V_{P,3} = 1.459$ cm/min (maximum plasma velocity in region 3). The minimum value for F is determined below:

$$F = \frac{V_{P,3}}{C_{P,3}} = \frac{1.459}{0.55} = 2.653 \text{ cm/min}$$

Using equation (17) the fractions of WBC's and platelets crossing the boundary between regions 3 and 4 are found to be:

$$f_w = \frac{(1.459 - 0.094)}{2.653} = 0.514$$

$$f_p = \frac{[(1.459 - (-0.117)]}{2.653} = 0.594$$

It should be noted that carrying out the same procedure with varying the rpm gives the same fractional amounts of species i passing across the RBC interface. The only difference is that system flow rates change. Thus the maximum f_i's for the species considered are between 51.4 and 59.4% for a feed hematocrit of 45%.

Realistically, problems associated with the handling of the concentrated RBC's exiting region 1 would occur if the centrifugal process was operated to

obtain the maximum possible degree of separation between plasma and RBC's. These problems occur because blood viscosity is a strong function of hematocrit. Therefore problems associated with clogging of exit tubes and with pumping would result. To compensate for these problems it may be desired to operate at slightly higher than minimum feed conditions in order to reduce the hematocrit of the concentrated cells in region 1. If an 80% hematocrit were desired for the concentrated red cells the required feed rate per cross sectional area, F, could be determined by first making a plasma balance:

$$F\ C_{P,F} = V_{P,3} + [C_{R,F}/C_{R,1} - C_{R,F}]F \qquad (19)$$

where $C_{R,F}$ is the concentration of the RBC's in the feed and the quantity $[(C_{R,F}/C_{R,1})-C_{R,F}]$ is the amount of plasma leaving in the RBC stream per cross-sectional area. Rearrangement of equation (19) gives the following expression for F:

$$F = \frac{V_{P,3}}{1.0 - (C_{R,F}/C_{R,1})} \qquad (20)$$

Note: $C_{P,F} + C_{R,F} = 1.0$

From this an adjusted feed rate can be determined for a region 1 hematocrit of 80% as follows:

$$F = \frac{1.459}{1.0 - (0.45/0.80)} = 3.335 \text{ cm/min}$$

Because the feed rate per cross sectional area is increased without a corresponding increase in sedimentation velocities, fractional amounts of components crossing into region 4 will be lowered. The newly determined values for f_w and f_p are then found to be 0.409 and 0.473 respectively.

3.3.2 Implications of Continuous Flow Processing Modeling

Once a cellular component crosses an interface from a concentrated cellular region to a region where a dilute cell suspension exists, drastic changes in sedimentation velocities for that particle will be encountered. For example, when a platelet is carried by the plasma from region 3 to region 4 in the above example, a 40-fold change in magnitude combined with a change in direction is observed. This phenomenon may be attributed to the fact that the bouyant effect due to a high suspension density is significantly reduced. WBC's are less affected by this phenomenon, however. A WBC, for example, undergoes a 19-fold increase in sedimentation velocity when crossing from region 3 to 4.

Interesting ramifications result from the crossing of particles from a concentrated region to a more dilute region. For instance, if the plasma flow rate is properly adjusted, WBC's because of their higher sedimentation rates in region 4 will form a layer above the red cell interface (see region 4a of Figure 7). This layer is commonly referred to as the buffy coat. Because platelets have significantly

lower settling velocities than WBC's, they may not be trapped in the buffy coat layer, but may pass out of the centrifuge with the plasma. If the buffy coat were allowed to accumulate within the centrifuge it may build up rapidly, forming a predominantly white cell layer which could later be harvested. Since large quantities of WBC's are desired for therapeutic purposes, such a scheme is of great significance.

3.3.3 Considerations for Degree of Rouleau Formation

The previous example was performed using a normal average 45% HCT. As demonstrated earlier, however, the maximum separation efficiencies may not necessarily be obtained at a normal 45% HCT. Table 5 lists the minimum feed rate per cross sectional area and fractional recoveries for WBC's and platelets as a function of HCT. Also listed are adjusted feed rates to yield a region 1 HCT of 80% with corresponding fractional recoveries for WBC's and platelets. These values were determined using equations (9), (17), (18), and (20) where red cell sedimentation velocities were determined using Kernick's analysis for degree of rouleau formation in equation (15). Figure 8 shows a plot of adjusted fractional recoveries for WBC's and platelets as a function of HCT.

As revealed by Table 5 and Figure 8, maximum fractional recoveries indeed do not occur at the 45% HCT, but rather at somewhat lower values. Maximum WBC fractional recoveries

Table 5

Fractional Recovery and Feed Rate Information

as a Function of HCT

HCT (% RBC's)	F (cm/min)	f_w	f_p	F_A (cm/min)	$f_{w,A}$	$f_{p,A}$	f_r
0	1.770	-	0.386	1.770	-	0.386	0.587
1.0	1.320	-	0.956	1.320	-	0.956	0.010
2.0	1.783	0.056	0.955	1.792	0.056	0.951	
2.5	1.956	0.165	0.954	1.969	0.164	0.946	
5.0	2.732	0.422	0.937	2.769	0.416	0.924	
7.5	3.244	0.531	0.915	3.311	0.521	0.897	
10.0	3.597	0.588	0.892	3.70	0.571	0.868	
15.0	4.051	0.632	0.845	4.23	0.604	0.809	
20.0	4.181	0.638	0.797	4.46	0.598	0.747	
25.0	4.035	0.629	0.748	4.401	0.576	0.686	
30.0	3.819	0.607	0.699	4.277	0.542	0.624	
35.0	3.506	0.579	0.649	4.052	0.501	0.562	
40.0	3.055	0.550	0.600	3.666	0.458	0.500	
45.0	2.653	0.514	0.550	3.335	0.409	0.438	
50.0	2.242	0.477	0.501	2.989	0.358	0.376	
55.0	1.787	0.441	0.451	2.573	0.306	0.313	
60.0	1.423	0.400	0.401	2.276	0.250	0.251	
65.0	1.023	0.385	0.352	1.909	0.192	0.188	
70.0	0.783	0.319	0.302	1.880	0.133	0.126	
75.0	0.560	0.275	0.252	2.240	0.069	0.063	

Figure 8. Fractional Recoveries of WBC's and Platelets as a Function of HCT. WBC and Platelet fractional recoveries determined as a function of HCT for the case where the concentrated red cell stream has an HCT of 80% are plotted. The optimum recovery for WBC's appears at a HCT of between 15 and 20% while that for platelets appears at around 1% HCT. WBC recoveries drop off at lower HCT's because WBC and RBC sedimentation velocities begin to approach each other. Platelet recoveries steadily increase until very low HCT's because platelet sedimentation velocities remain very small compared to those of the RBC.

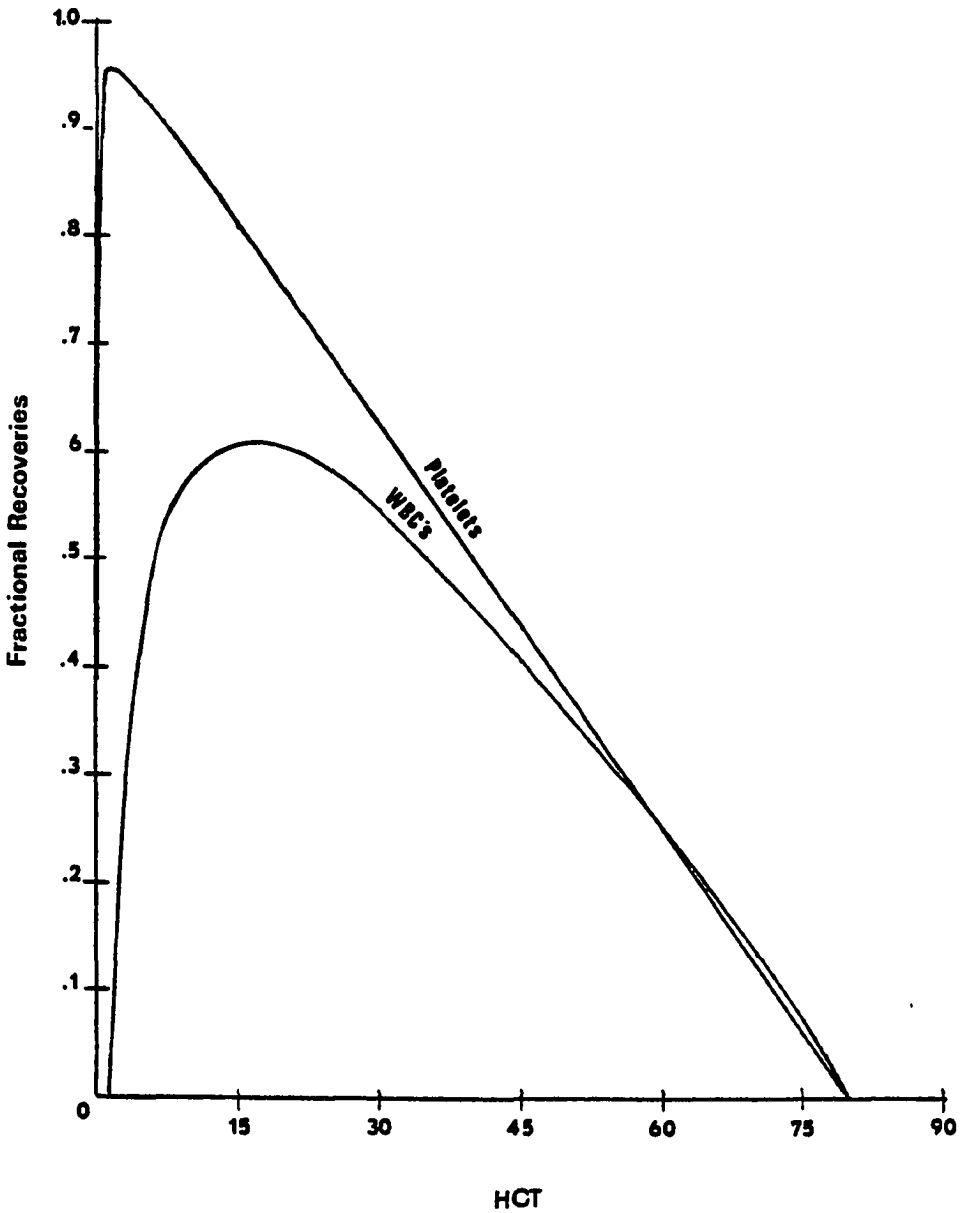
1.0
.9
.8
.7
.6
.5
.4
.3
.2
.1
0
Fractional Recoveries
Platelets
WBC's
15
30
45
60
75
90
HCT

Figure 8

occur at a hematocrit of 15% while maximum platelet fractional recoveries occur at a hematocrit of 1%. In actuality, however when it is taken into consideration that the feed stream concentration of WBC's or platelets would be reduced by dilution in order to operate at lower hematocrits, the overall harvest rate of WBC's or platelets may not actually be increased. The harvest rate is only increased if the actual feed volume of whole blood from the patient remains constant. Since plasma or saline diluent must be added to reduce the HCT the actual feed volume to the separation process would be increased. Therefore, in order to obtain the desired feed rate per cross sectional area, F or F_A, the cross sectional area of the separation chamber would have to be increased as a function of the amount of dilution.

3.3.4 Conclusions for Continuous Processing Developments

One can readily see that the above analysis demonstrates that the HCT at which a blood stream is fed to a centrifugal separation process has a significant effect on process efficiency. When determining which HCT's are best to use in a separation process a qualitative analysis like that shown above will help. However, the above analysis is only qualitative and really doesn't take into account blood chamber configuration, shear effects, localized flow anomalies within the separation chamber, or possible other effects which may later be found to be important. In reality one must use the qualitive approach

as a beginning point, but actual experimental data must be uniquely obtained over a range of HCT's and process flow rates for each blood separation chamber design. These data would consist of fractional recoveries and overall harvest rates for each blood component which is desired to be separated.

CHAPTER IV

DEVELOPMENT OF PROCESS DESIGNS

The focus in this chapter will be on the application of the sedimentation theory discussed and developed in the previous chapter. Specific applications will be made to recycle processing, processing through stages in series, and multistage processing. For each application process theory will first be discussed which will be followed by a discussion of the implications that proposed process designs will have on separation enhancement.

4.1 APPLICATION OF RECYCLE CONCEPTS

4.1.1 Purpose for Recycle Applications

The concept of recycle has been of fundamental importance to chemical engineering process designs. When applied to chemical reactions, for instance, even reactions which normally undergo very low conversions upon a single pass through a reactor can be made quite efficient. Higher efficiencies are accomplished by recycling some of the reaction product stream back to the feed stream. This gives unconverted reactants an additional "chance" to react to form desired products. As the recycle rate is in-

creased reaction efficiencies are increased as well. As reactor efficiency is enhanced, collection periods for desired amounts of specified products may be decreased.

An analogous solution has been hypothesized in this dissertation for the enhancement of blood cell separations. As previously shown whole blood can be separated on a continuous basis into concentrated RBC's, a WBC buffy coat, platelet rich and platelet poor plasma. Often it is the buffy coat or the platelet rich plasma which are the desired separation products, but a high percentage of platelets and WBC's, are lost to the concentrated red blood cell stream.

However, if the concentrated erythrocyte stream is recycled (see Figure 9) to the feed stream, unseparated WBC's will have an additional "cpportunity" to be separated and separation efficiencies are likely to be increased. One must be careful, however, that the hematocrit of the combined recycled and fresh blood does not become too high as to adversely affect relative sedimentation rates of various blood cellular components. As was shown earlier sedimentation rate decreases as a function of hematocrit and therefore excessively high hematocrits can be detrimental to the process. This problem of increasing hematocrits can be easily remedied by

Figure 9. Single Stage Recycle Centrifugation. The accumulation of WBC's in the buffy coat can be enhanced by recycling the concentrated red cell stream. Cells normally lost out the concentrated stream therefore have an increased likelihood of being isolated in the buffy coat. Plasma is recycled to adjust blood chamber feed HCT.

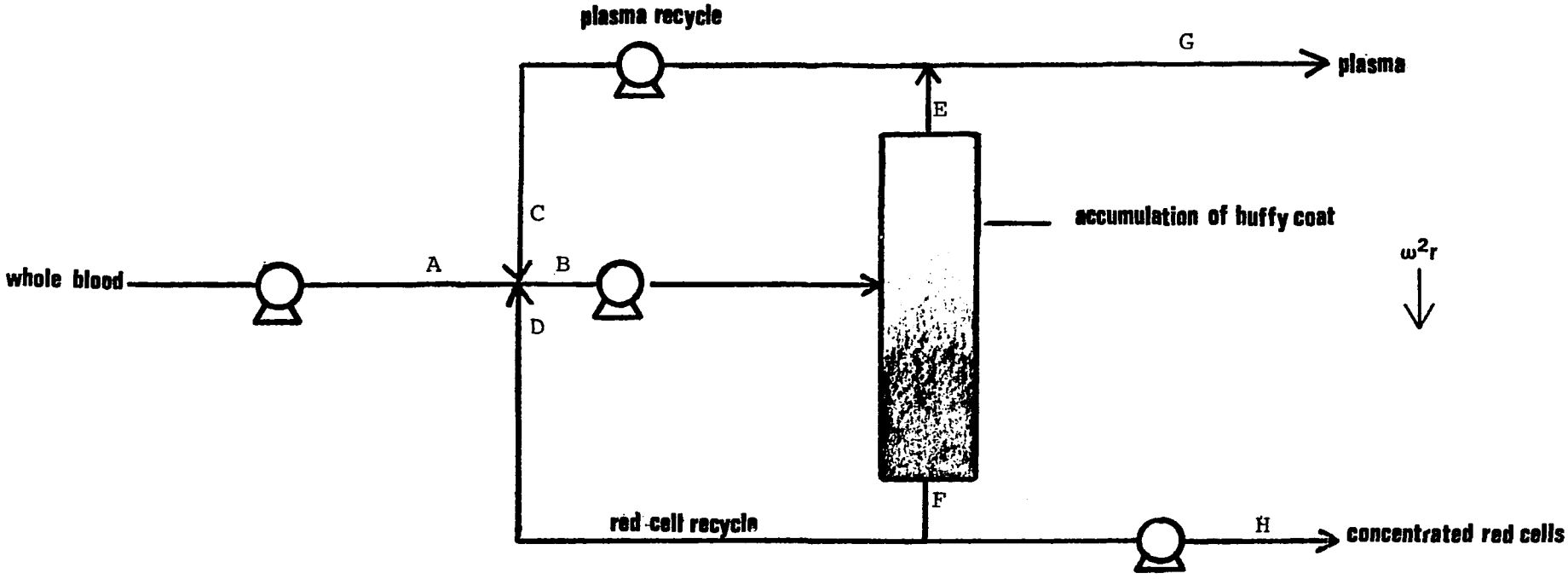
plasma recycle
G
plasma
E
C
accumulation of buffy coat
whole blood
A
B
$\omega^2 r$
D
F
red cell recycle
H
concentrated red cells

Figure 9

applying Sartory's idea of recycling separated plasma at a sufficient rate to keep feed blood at any desired hematocrit.

Several process designs can be used in conjunction with recycle concepts depending on which fractional component of the blood is desired. Slightly different schemes have been proposed for obtaining WBC's, platelet rich and platelet poor plasma or combinations of these three fractions. These will be discussed in greater detail in a later section.

4.1.2 Application of Recycle Concepts to Blood Separations

The analysis of recycle concepts as applied to blood separations begins with the setting up of material balances around the process for the various blood components. Since it is considerably more difficult to efficiently separate the WBC's from the RBC's than it is to separate platelets from either of these two species, the application of material balance equations will be limited to RBC's and WBC's.

The analysis will begin with a look at the RBC's since RBC concentration is such an important factor in effecting the sedimentation rates of recycled streams and in stream viscosities for pump design. For this analysis we assume that for all cases no RBC's exit the "light end" (plasma end of Figure 9), but that the centrifugal

force and residence time are great enough to allow for complete separation of the RBC's from the plasma. We also assume that the whole blood feed and recycled streams are well mixed to form a homogeneous mixture of plasma and blood components into the separation chamber.

First, RBC balances are taken around the overall process and the recycle-feed stream mixing point for Figure 1. The balance equations appear below:

Overall RBC balance

$$R_A Q_A = R_H Q_H \tag{21}$$

Mixing point RBC balance:

$$R_A Q_A + R_D Q_D = R_B Q_B \tag{22}$$

where: A, B, C, D, E, F, G, H are the various process streams referring to Figure 9;

R refers to the red cell concentration (by volume) of the designated streams;

Q refers to the flow rate of the designated stream.

Rearrangement of equation(21) allows us to solve for the red cell concentration of the concentrated RBC

stream H:

$$R_H = R_A Q_A / Q_H \tag{23}$$

By observation we notice that the hematocrit will vary as a function of the flow rate of stream H, and that Q_H cannot be smaller than the product $R_A Q_A$ because the maximum red cell concentration cannot be greater than 100%.

Next it is important to determine the effect of recycling concentrated RBC's and plasma upon the red cell concentration of blood entering the separation chamber at stream B. First a mass balance is made around the mixing point:

$$Q_A + Q_C + Q_D = Q_B \tag{24}$$

Solving equation (22) for R_B and combining with equation (24) gives:

$$R_B = \frac{R_A Q_A + R_D Q_D}{Q_D + Q_A + Q_C}$$

Dividing the top and bottom of the above equation by Q_H, using equation (23) and realizing that $R_D = R_H$ gives:

$$R_B = R_H \left[\frac{(Q_D/Q_H) + 1}{(Q_D/Q_H) + (Q_A + Q_C)/Q_H}\right]$$

Noting that Q_D/Q_H is the recycle rate for the concentrated RBC product stream and redefining it as the variable R, the above equation becomes:

$$R_B = R_H \left[\frac{R + 1}{R + (Q_A + Q_C)/Q_H}\right] \qquad (25)$$

If the values for Q_A, Q_H and R_H are fixed it is apparent that red cell concentration at B is dependent on the recycle ratio of the concentrated stream and the amount of plasma recycled. In many cases R_B will be a fixed value to give desired fractional recoveries for specified cellular components. In such cases it is important to determine the amount of plasma that must be recycled as a function of the recycle ratio in order to keep R_B constant. Rearrangement of equation (25) to solve for Q_C gives:

$$Q_C = Q_H[(R_H/R_B)(R + 1) - R] - Q_A \qquad (26)$$

Next a look will be taken at the separation of a specified cellular component from the RBC's, in this case white blood cells. For this, WBC balances are taken around the overall process and the recycle-feed stream mixing point. Note that often these separations are not entirely steady state processes or equilibrium separations since separated WBC's collect in a buffy coat and are not removed from the process until a sufficient quantity of WBC's have been collected. At this point flow out the concentrated end (stream H) and recycling is stopped in order to push the collected buffy coat out the plasma end of the chamber. For the purpose of writing balance equations Q_{WE} will be defined as the rate of white cell collection in the buffy coat. Balance equations appear below:

$$W_A Q_A = Q_{WE} + W_H Q_H \tag{27}$$

mixing point WBC balance:

$$W_A Q_A + W_D Q_D = W_B Q_B \tag{28}$$

The rate at which WBC's are collected in the buffy coat, Q_{WE}, is dependent upon the separation efficiency. The separation efficiency for the recycle process is identical to the WBC fractional recovery, f_w, for a separation stage without recycle having the same feed and exit stream conditions as are found in streams

B, E and F of Figure 1. As was shown earlier f_w values can be determined either experimentally or from theoretical predictions. Therefore, Q_{WE} can be defined as follows:

$$Q_{WE} = f_w W_B Q_B \tag{29}$$

Simultaneous solution of equations (27), (28) and (29) will give the overall process efficiency for collection of WBC's based on concentrated stream recycle ratio and the f_w value for the non-recycle case for streams B, E and F. First equation (29) is substituted into equation (27) to give the concentration of WBC's in stream H:

$$W_H = (W_A Q_A - f_w W_B Q_B)/Q_H$$

Noting that $W_D = W_H$, the above expression is substituted into equation (28) and rearranged to solve for W_B:

$$W_B = \frac{W_A Q_A [1 + (Q_D/Q_H)]}{Q_B [1 + f_w (Q_D/Q_H)]}$$

Recalling that Q_D/Q_H, the concentrated stream recycle ratio, was defined as the variable R, and substituting W_B into equation (29), one can solve for the ratio of WBC's collected to WBC's initially fed to the process in stream A:

$$\frac{Q_{WE}}{W_A Q_A} = \frac{1 + R}{1/f_w + R} \tag{30}$$

4.1.3 Implications of Design Theory

The value of $Q_{WE}/W_A Q_A$ is referred to as the overall efficiency for the recycle process. A plot of the recycle efficiency as a function of recycle rate with fractional recovery as a parameter appears in Figure 10. The same kind of information is plotted in a different way in Figure 11 which shows recycle efficiency as a function of fractional recovery with recycle rate as a parameter.

Both plots have their advantages. Plots like Figure 10 are important where the maximum allowable recycle rate is fixed for a particular blood chamber design and it is desired to know just how much the separation efficiency can be increased. Figure 11 is important for design purposes. If a particular recycle efficiency is desired for a specified f_w value one can determine the range of recycle rates for which the blood chamber must be designed. Both plots reveal that efficiencies can be significantly increased by recycling the concentrated separation product.

It may be helpful at this point to set forth a typical example of how separation efficiencies may be increased and what implications this may have on the final design. Using various apparatuses, investigators have found using single stage processing and no recycle that they are able to recover between 20 and 60% of the feed WBC's in a buffy coat (2, 47, 58).

Figure 10. WBC Collection Efficiency for Fixed Maximum Recycle Rate. The graph shows the effect of recycle on WBC collection efficiency. The fractional recovery for the case without recycle is chosen as the parameter.

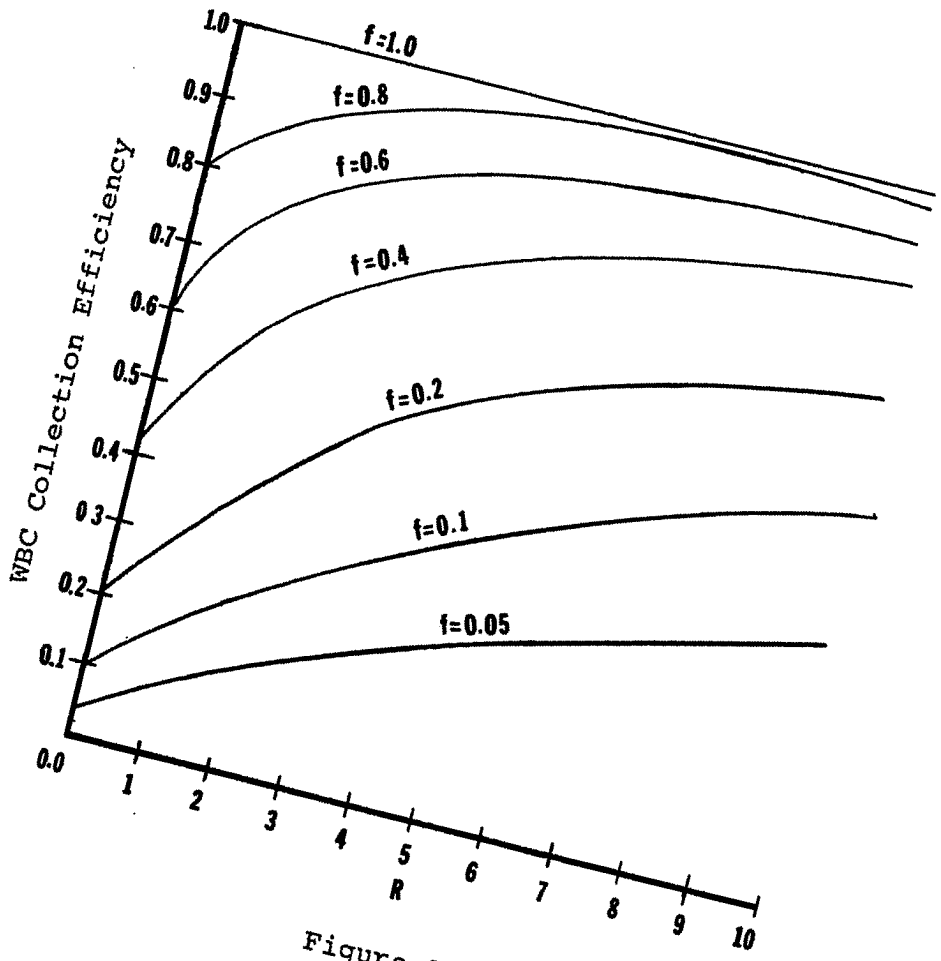
WBC Collection Efficiency
1.0
0.9
0.8
0.7
0.6
0.5
0.4
0.3
0.2
0.1
0.0
f=1.0
f=0.8
f=0.6
f=0.4
f=0.2
f=0.1
f=0.05
1
2
3
4
5
6
7
8
9
10
R

Figure 10

Figure 11. WBC Collection Efficiency with Recycle for Fixed Non-Recycle Fractional Recovery. For a given fractional recovery for the non-recycle case the graph indicates the recycle rate that would be required in order to obtain a desired efficiency.

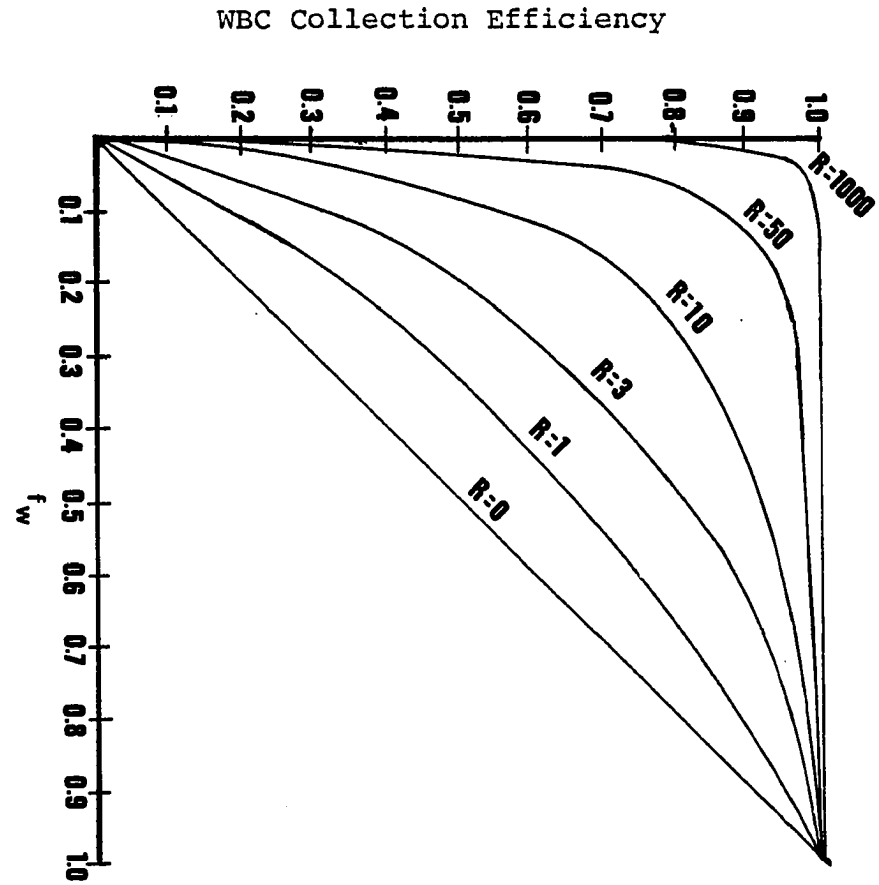
WBC Collection Efficiency
0.1
0.2
0.3
0.4
0.5
0.6
0.7
0.8
0.9
1.0
R=1000
R=50
R=10
R=3
R=1
R=0
f_w

Figure 11

Selecting an intermediate value of 40%, Figures 10 and 11 reveal that for recycle rates of 5, 10 and 50, recycle efficiencies are determined to be 80, 88 and 97% consecutively. With these efficiencies and an extra-corporeal shunt of 100 cc/min, a rate near the maximum feasible value (53), collection times for $1x10^{11}$ WBC's would be 125, 114 and 103 minutes for the respective recycle rates. These collection times compare to a time of 250 minutes for the same shunt without recycle. Thus by recycling the concentrated stream it appears to be possible to reduce donor patient machine connection times to less than half of that for the case without recycle.

4.1.4 Process Design Constraints for Recycle Processes

There are several process design constraints that must be considered when using recycle processing for blood separations. These stem from the fact that when the recycle rate is increased, the flow rate through the separation chamber will also increase. Increased flow rate will result in decreased residence times and increased shear rates. Compensation for the reduced residence times may be made by increasing centrifuge rpm. However, compensation can be made for both the reduced residence time and the increased shear rate by increasing the cross-sectional area of the separation chamber.

If cross sectional area is increased so that the superficial velocity is held constant with increasing flow, residence time will also be held constant. This will also have the effect of drastically reducing shear rates, since shear rate is an inverse function of the cube of the radius. On the other hand blood chamber volumes may become so large that patient blood volume depletion becomes a problem. An alternative is to hold shear rate constant with increasing flow rate, but additional compensation will have to be made for increasing superficial velocities by increasing the centrifuge rpm. A more theoretical analysis for the problems associated with increased flow in recycle chambers is developed and discussed in the next section.

4.1.5 Analysis of Chamber Design for Increased Flow in Recycle Chambers

The volume requirement for the blood chamber, V_c, is determined by the following simple relationship:

$$V_c = \pi r_o^2 L \qquad (31)$$

where:

L = length of blood chamber

r_o = radius of blood chamber

If it is desired to keep the superficial velocity constant r_o is determined as follows:

$$r_o = \sqrt{Q/\pi V_{le}} \tag{32}$$

where:

Q = feed flow rate to blood chamber (stream B)

V_{le} = "light end" superficial velocity

On the other hand if it was desired to hold the shear rate constant r_o would be determined from the following equation:

$$r_o = \sqrt[3]{\frac{4Q}{\pi\gamma}} \tag{33}$$

where:

γ = shear rate

From the above set of relationships it can be shown that blood chamber volumes will increase more rapidly with flow rate for the case of holding the superficial velocity constant than for that of holding the shear rate constant. This is simply due to the fact that r_o is a function of the square root of the flow rate when V_{le} is constant while it is a function of the cubic root of the flow rate when γ is held constant. A drastic increase in volume requirements will reveal design constraints because of the limited volume of blood which can safely be removed from the patient.

On the other hand for the case where shear rate is held constant centrifuge rpm limitations may become an important factor. Since r_o does not increase as rapidly

with increasing flow rate, the superficial velocity will increase. The increase in superficial velocity must be compensated for by a corresponding increase in sedimentation velocities for cellular components. This of course means that rpm must increase as well.

For the previous example of section 4.1.3 with recycle rates of 5, 10 and 50 for a concentrated stream hematocrit of 80%, a process feed rate of 100 cc/min, and stream B hematocrit of 40%, the recycle stream flow rates (stream D) would be 250, 500 and 2500 cc/min consecutively. In order to maintain stream B hematocrits at 40%, plasma flow rates from equation (26) are calculated to be 250, 500 and 2500 cc/min. Thus stream B flow rates would be 600, 1100 and 5100 cc/min respectively. Tables 6 and 7 show the effect on the volume requirement of holding the superficial velocity constant and the shear rate constant respectively. The length of the blood chamber was taken as 30 cm.

Table 6 reveals that although shear rates will cause no problems at all with increased feed flow rates, the volume requirements will become excessive. Since the limiting volume which can be removed from a patient is somewhere between 500 and 1000 ml, recycle rates could not be increased much above a value of 5.

Table 7 on the other hand reveals that volume

Table 6

Effect of Holding Superficial Velocity Constant with Increasing Feed Flow Rate

Recycle Rate	Q (ml/min)	V_{le} (cm/min)	r_o (cm)	V_c (cm^3)	γ (sec^{-1})
0	100	57	0.75	53	5
5	600	57	2.76	720	0.60
10	1100	57	3.74	1320	0.45
50	5100	57	8.05	6120	0.21

Table 7

Effect of Holding Shear Rate Constant

with Increasing Feed Flow Rate

Recycle Rate	Q (ml/min)	γ (sec^{-1})	r_o (cm)	V_c (cm^3)	V_{le} (cm/min)	rpm
0	100	5	0.75	53	57	1500
5	600	5	1.37	174	103	2016
10	1100	5	1.67	261	126	2230
50	5100	5	2.79	720	213	2900

requirements do not become excessive even at recycle rates of 50. The centrifuge rpm must be increased however, in order to provide higher sedimentation velocities to compensate for the increased superficial velocities. Maximum rpm generally used for blood processing with centrifuges of this size are around 3000. Table 7 reveals that recycle rates as high as 50 would be possible. Centrifuge heads must be constructed so that they can accommodate the higher G-forces, however. Because of the need for sturdier construction of the heads to accommodate the higher rpm, economic factors may become a consideration as well. All things considered however, it appears that it would be wiser to design recycle processes such that shear rate is kept constant or at least below some predetermined maximum. This would allow for higher recycle rates to be used and therefore allow high efficiencies to be obtained.

4.1.6 Design Alternatives for Recycle Processing

The following will be a discussion of some typical design flow schemes for recycle operations. Figure 9 depicts a method for harvesting WBC's and platelets in a buffy coat. In reality the process is discontinuous with respect to the collection of the harvested cells. The buffy coat is allowed to build up, then the recycle streams and the concentrated RBC stream are shut down while the

buffy coat is collected out the plasma end. Processes employing recycle concepts which provide WBC's and platelet rich plasma on a continuous basis may be used as well. These processes require more than one stage and are shown in Figures 12 and 13.

Figure 12 depicts a dual stage recycle process where platelet rich plasma (PRP) and buffy coat are routed to a second stage. In the second stage WBC's are separated from the PRP and harvested on a continuous basis. Meanwhile a portion of the PRP is recycled for hematocrit control and the remainder is either harvested or reinfused into the donor patient.

Figure 13 describes a 3 stage process with the first two stages having functions identical to those of Figure 12. The third stage is then used to concentrate platelets and harvest them continuously. Some of the platelet poor plasma from the third stage is recycled for hematocrit control while some is routed out of the separation process to be collected or reinfused into the donor patient.

4.1.7 Concluding Remarks Concerning Recycle Processing

Future research may reveal that identical techniques may be employed for the separation of different white cell types from each other or even the separation of reticulocytes from older red cells. In fact the

Figure 12. Dual Stage Recycle Centrifugation with Continuous Buffy Coat Collection in Second Stage. WBC's can be harvested continuously for the recycle process if the buffy coat and plasma are routed to a second stage. In this case WBC's are concentrated in the second stage while platelet rich plasma is recycled for HCT adjustment.

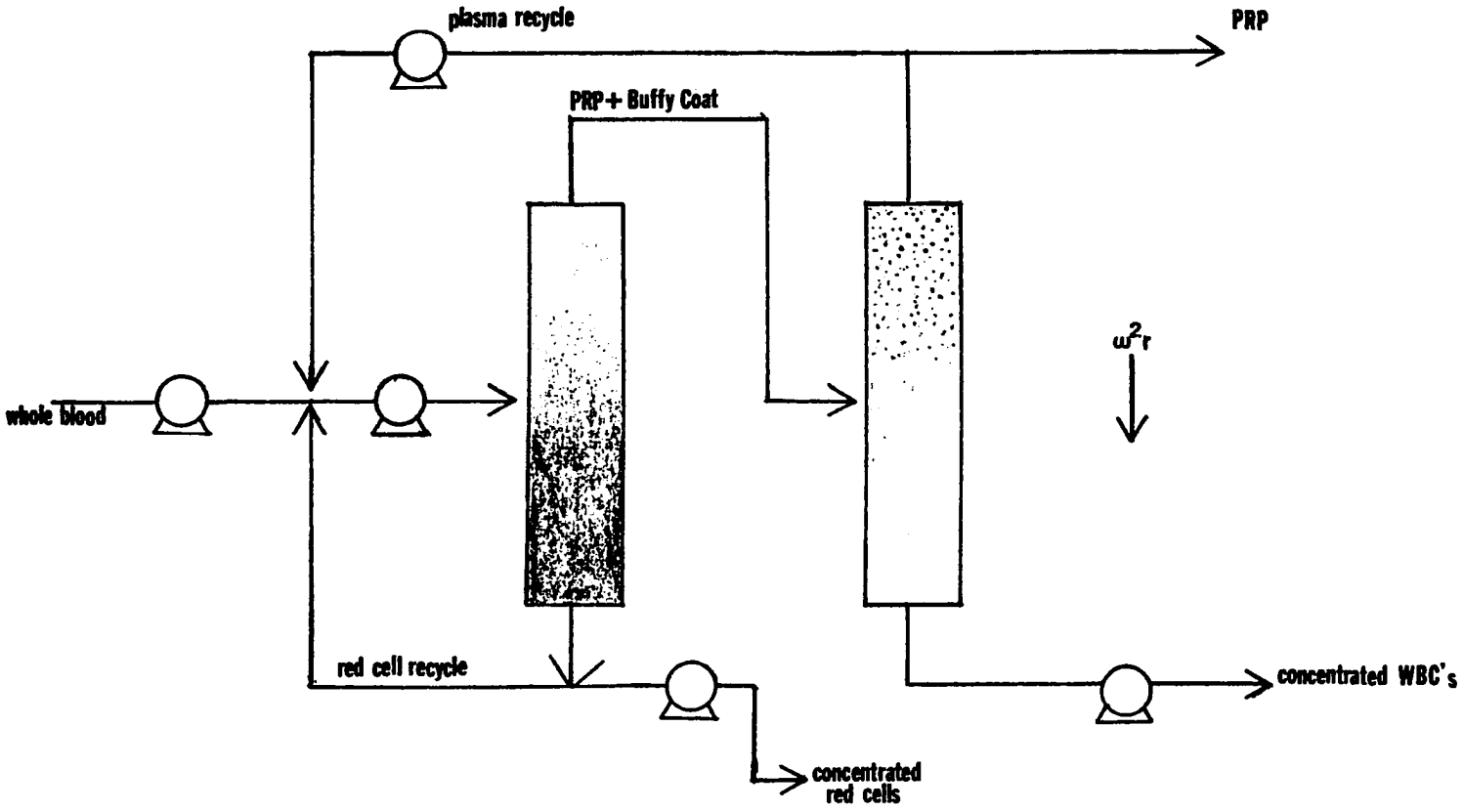
plasma recycle
PRP
PRP+ Buffy Coat
$\omega^2 r$
whole blood
red cell recycle
concentrated WBC's
concentrated
red cells

Figure 12

Figure 13. Triple Stage Recycle Centrifugation with Continuous Collection of Buffy Coat and Platelets. Both platelets and WBC's may be harvested continuously as individual products using this process scheme. Platelet poor plasma is recycled for HCT control while the Buffy coat is concentrated in the second stage and platelets in the third stage.

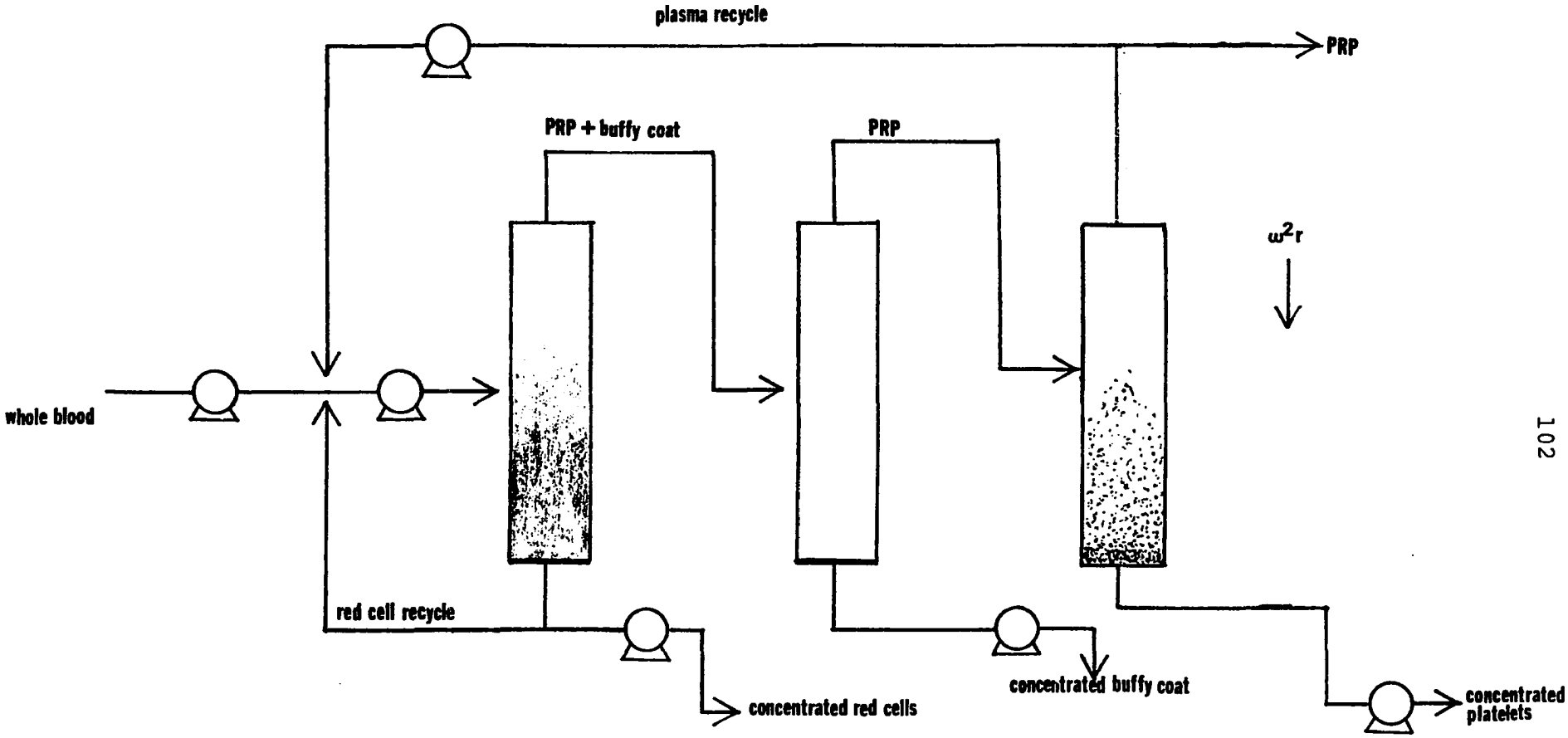
plasma recycle
PRP
PRP + buffy coat
PRP
$\omega^2 r$
whole blood
red cell recycle
concentrated red cells
concentrated buffy coat
concentrated platelets

Figure 13

approach may be found to be applicable in general to any cell separation process. The intent of this dissertation, however, is to focus on WBC separations in order to lay the ground work for future research efforts.

One would expect the above analysis of recycle processing to give predictions which are quite accurate for enhanced recovery efficiencies for cellular components if the f_i values for single stage no recycle are known. However, as with the case for the analysis of the effect of rouleau formation on separation, the above analysis for recycle processing is only the first step. Predicted separation efficiencies must be compared with actual experimental data for each blood chamber type. However, the above analysis does give the experimental investigator a good "picture" of how separation efficiencies can be enhanced through recycle processing and where he might expect to find the most ideal operating conditions for a particular design.

Thus far the theoretical development has been restricted to the separation of white cells, but the theory can be readily extended to platelet separations. Essentially for the approach for platelet separation the same equations may be applied with a substitution of platelet concentration for WBC concentration. If all of the platelets are found in the buffy coat of Figure 9 the approach is identical to that which was done for

the WBC analysis. Q_{WE} would be replaced by Q_{PE} for the rate of platelet collection and all white cell concentrations would be replaced by platelet concentrations.

The superficial velocity of the plasma may however, be great enough to carry platelets but not WBC's out the plasma exit port. In this case the Q_{PE} term will still represent the amount of platelets being separated in the recycle process (assuming no platelets are trapped in the buffy coat). If it were desired to harvest these platelets they would have to be concentrated in a second stage where plasma superficial velocity out the top of the second stage was low enough to allow platelets to settle and concentrate. Similar adjustments in superficial velocities would have to be made in order to separate both WBC's and platelets in a three stage process.

4.2. STAGES IN SERIES

4.2.1. Extension of Single Stage Development to Stages in Series

As was shown previously fractional recoveries out of the "light end" (innermost radius) of a radial-type centrifugal separation chamber can be predicted using equation (17):

$$f_i = \frac{(V_p - \tilde{V}_i)\ C_{i,s}}{F\ C_{i,F}}$$

where: f_i = the fraction of species i passing out of the "light end" of the stage with respect to the amount of component i in the feed stream to the stage

V_p = superficial velocity (flow rate/ cross-sectional area) of the plasma traveling toward the "light end" within the separation chamber

$\tilde{V}_i$ = the sedimentation rate of component i

$C_{i,s}$ = concentration of component i within the stage

$C_{i,F}$ = concentration of component i in the feed stream to the stage.

Superficial velocities toward the light end of the centrifuge chamber may be adjusted to exceed the sedimentation velocity of the RBC. When this is done the separation of RBC from plasma will no longer be complete and RBC's will be found exiting the "light end" along with WBC's and platelets. From an engineering standpoint such a scheme may prove to be advantageous, however, if a series of stages were employed. The flow scheme for such a process is shown in Figure 14. Although RBC's are carried out of the "light end" of each successive stage along with other components, the RBC fractional recovery would theoretically be substantially lower than

Figure 14. Stages in Series for Cell Harvesting. Superficial velocity toward the "light end" can be increased such that all cell types are carried through a series of stages. Cells with greater settling velocities will gradually be separated out with each sequential stage. Cells of lower settling velocities will maintain higher fractional recoveries with each successive stage.

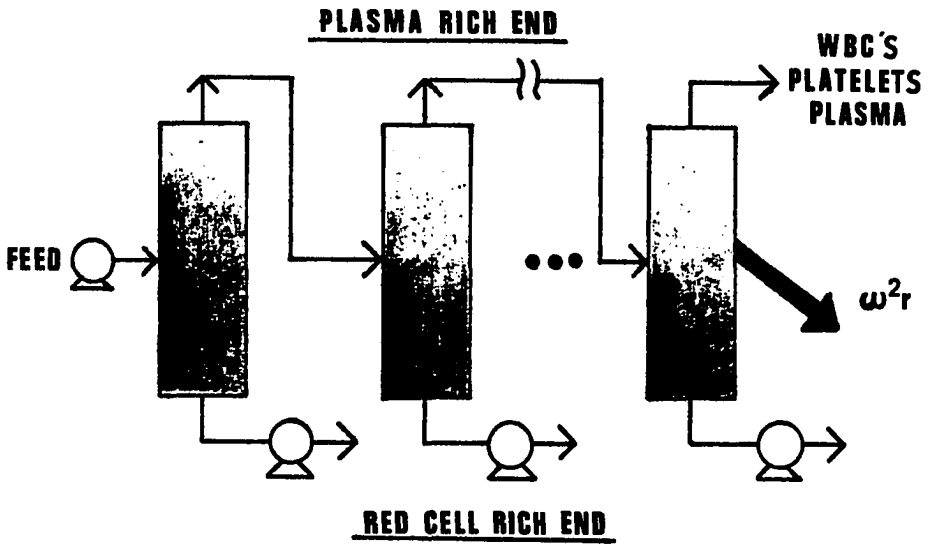
PLASMA RICH END
WBC'S
PLATELETS
PLASMA
FEED
$\omega^2 r$
RED CELL RICH END

Figure 14

that of the lighter components. The reason for this is simply that RBC sedimentation velocities are substantially higher than those for the lighter components of the blood. This can be easily demonstrated after modifying equation (17) by replacing V_P with V_{le} where the subscript le stands for light end. The new equation appears below:

$$f_i = \frac{(V_{le} - \tilde{V}_i)\, C_{i,s}}{F\, C_{i,F}} \qquad (34)$$

Now feed rates per cross sectional area can be substantially increased to allow for higher values for V_{le}. An example case may be set forth for a centrifuge operating at 1500 rpm with a blood chamber located at a 10 cm radius. At a feed rate per cross-sectional area of 10 cm/min for blood with a 20% HCT and a "light end" superficial velocity of 8.9 cm/min, the fractional recoveries for red and white cells would be 0.556 and 0.822 respectively (these values were calculated using $\tilde{V}_R$ and $\tilde{V}_W$ values from Table 4).

4.2.2 Implications of Design Analysis

For stages in series the f_i values can be multiplied together for each successive stage to determine the overall fractional recovery of component i. A hypothetical case is henceforth presented to demonstrate the effect of separating cellular compon-

ents in a series of stages. For this case the f_{RBC} values are taken as 0.556 for each of four successive stages while those for the WBC's are taken as 0.822. It is assumed that HCT's and flow rates can be adjusted for each successive stage to keep these fractional recoveries constant. The overall fractional recovery after four stages is calculated below using the following equation:

$$f_i! = f_{i1} \times f_{i2} \times f_{i3} \times f_{i4} \qquad (35)$$

$$f_{RBC} = (0.556)^4 = 0.096$$

$$f_{WBC} = (0.822)^4 = 0.605$$

This hypothetical separation scheme appears attractive in that WBC recoveries are kept relatively high with each successive stage while RBC numbers are drastically reduced. If additional stages could be added while maintaining the same f_i values, one would find that after 6 stages the RBC numbers are reduced below 3% of the original number in the feed while overall WBC recovery is about 31%. Of course this is merely a hypothetical case, but the example does show that stagewise separation techniques may have potential for separating two components with f_i values that are significantly different.

Analysis of stages in series can be better understood with the aid of Figure 15 where percent overall recovery is plotted versus stage number with fractional recovery as a parameter. Referring to the figure one sees that if fractional recoveries can be held constant that after ten successive stages the overall recovery for WBC's will be greater than 80%. Meanwhile the plot reveals that almost all of the RBC's will have been eliminated.

4.2.3 Concluding Remarks Concerning Design Implications

The above findings reveal that the potential application of the stages in series for more efficient separations have great potential. Whether or not fractional recoveries can be maintained at high levels throughout successive stages must be investigated through experimentation. One would suspect that variations in degree of rouleau formation as more and more RBC's are removed through successive stages would have a drastic effects upon the overall efficiencies. In fact unless efforts are made to adjust hematocrits in the later stages, an azeotropic-like condition will probably occur when the degree of rouleau formation falls off. At this point further separations between red and white cells would be impossible. Experimental

Figure 15. Overall Fractional Recovery Through a Series of Stages. Overall fractional recoveries $f_i!$ are plotted as a function of stage number with individual stage fractional recoveries as a parameter. The plots assume that individual stage fractional recoveries can be held constant for a particular component through sequential stages.

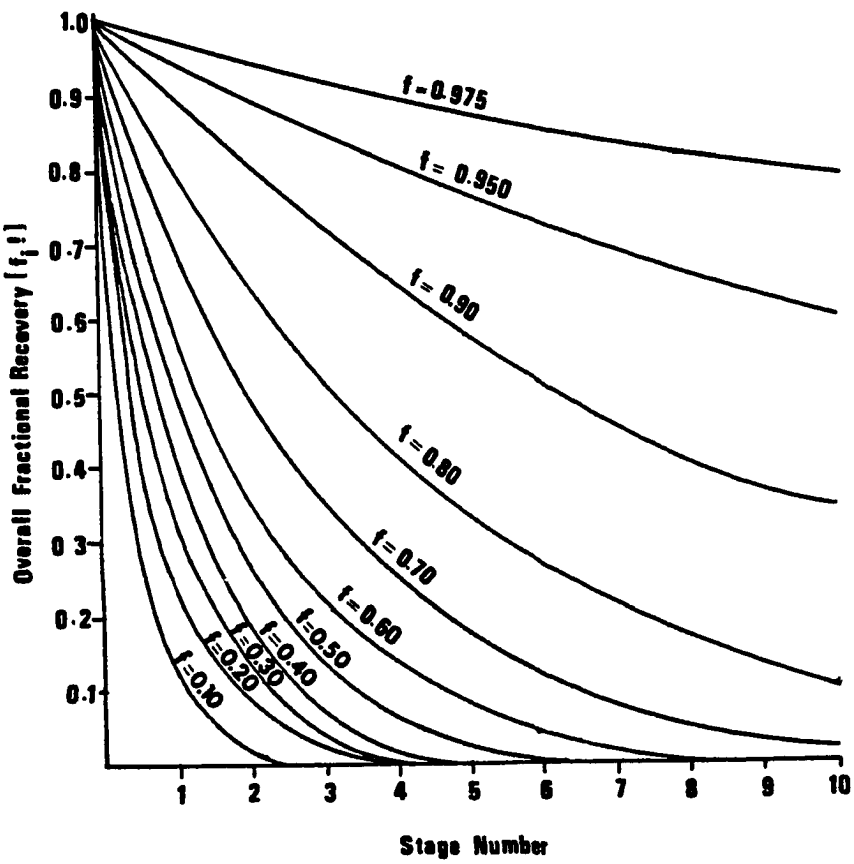
1.0
0.9
0.8
0.7
0.6
0.5
0.4
0.3
0.2
0.1
Overall Fractional Recovery [f_i!]
f = 0.975
f = 0.950
f = 0.90
f = 0.80
f = 0.70
f = 0.60
f = 0.50
f = 0.40
f = 0.30
f = 0.20
f = 0.10
1
2
3
4
5
6
7
8
9
10
Stage Number

Figure 15

data indicating the range of HCT's where further separations becomes difficult must be obtained in order to further the design strategy of such processes.

4.3 MULTISTAGE PROCESSING

4.3.1 Discussion of Multistage Theory as it Relates to Blood Processing

In the analysis for the processing of blood in a series of stages the "heavy end" process streams (streams exiting at the outermost diameter of a blood chamber) are drawn off from each successive stage. In actual experimental or clinical runs these streams would either be discarded or reinfused into the patient. Exiting with each "heavy end" process stream is a portion of the desired product(s) WBC's and/or platelets. Obviously as the amount of desired product lost to the "heavy end" streams increases the efficiency of the process decreases.

The loss of desired separation product may in fact be reduced by recycling the "heavy end" streams of each stage back to the preceding stage thereby enhancing the overall efficiency of the process. It may be found in fact that the ideal feed stage may not be the first stage, but rather one of the intermediate stages. A flow diagram for such a process appears in Figure 16 where "heavy end" process streams are pumped

Figure 16. Multistage Blood Processing Flow Diagram. A process which is analogous to fractional distillation processes in chemical industries can be applied to blood separations. Stages to the right of the feed stage provide for a gradual enriching of "lighter" cells while those to the left for the gradual enriching of "heavier" cells.

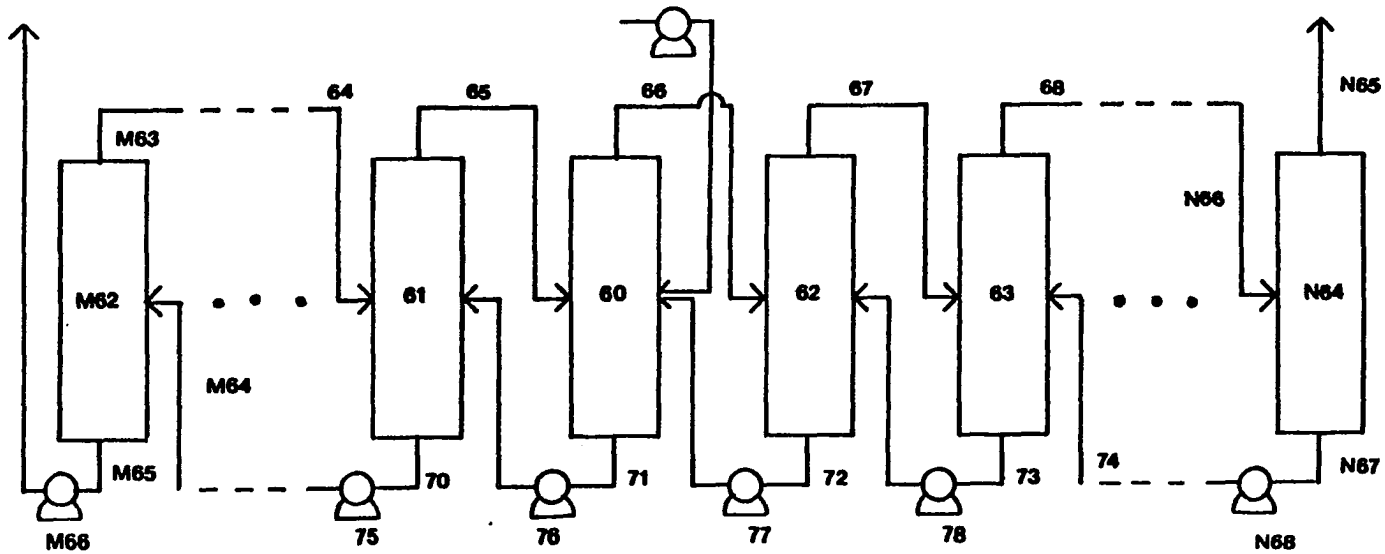

115

Figure 16

to preceding stages while "light end" process streams are routed to successive stages by mass balance.

The above process description is analogous to multistage fractional distillation processes found in the chemical and petroleum industries. An industrial distillation process consists of a series of stages or trays stacked on top of each other to form a column or tower. Within these towers vapor rising from each tray comes into intimate contact with the liquid stream from the tray immediately above it (86). There is never a complete separation between two or more chemical components in any one stage but rather an enriching of the more volatile components as the vapor phase passes upward through each successive tray of the column. As liquid passes downward through successive trays the heavier less volatile component is enriched through what's referred to as a stripping process. When a feed stream enters somewhere in the middle of a distillation column the upper half is referred to as the rectifying section while the lower half is referred to as the stripping section (86).

A schematic drawing representing an industrial distillation column appears in Figure 17. Vapor rising off of the top tray is condensed and a portion of the

Figure 17. Industrial Distillation Column Schematic. Industrial chemical separations can be accomplished through phase equilibrium of rising vapor with falling liquid on a series of plates. The driving forces in centrifugal separations are "upward" flow and "downward" settling of cellular components. Blood separation stages cannot be stacked on top of each other, however, since there is little density difference between rising fluid and settling cells. Instead streams are passed from stage to stage either by pumps or mass flow.

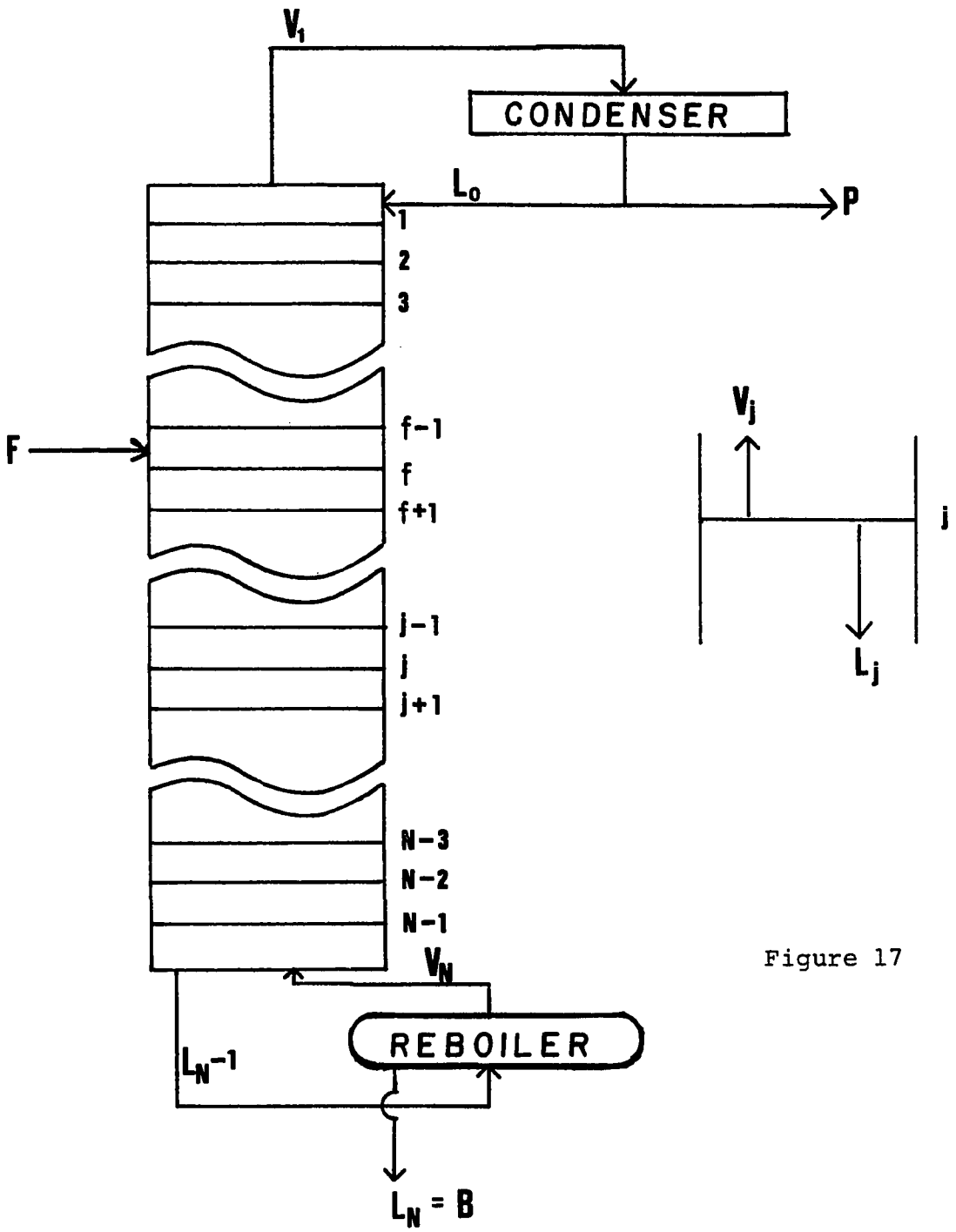
V1
CONDENSER
Lo
P
1
2
3
F
f-1
f
f+1
j-1
j
j+1
N-3
N-2
N-1
VN
REBOILER
LN-1
LN = B
Vj
j
Lj

Figure 17

condensed liquid is refluxed to come in contact with rising vapor from the second tray. The remainder of the condensate forms the distillate product which is comprised of less volitile components. A portion of the liquid product from the bottom tray is vaporized in the reboiler to come in contact with the liquid on the first tray.

In many respects multicomponent multistage distillation theory is synonymous to the theory used in analyzing the centrifugal stagewise separation of blood components. There even are similar problems associated with distillation processes which are expected to occur in multistage centrifugal processing as well. One such problem which was discussed earlier is one of the formation of azeotropic-like conditions at low HCT's. Another is the complex task of optimizing the separation process. Optimization can become very involved. Optimization tasks include the location of the optimum feed location, determination of process flow rates, "heavy end" and "light end" recycle rates and adjustment of superficial stage velocities through the variation of stage cross-sectional diameters.

To thoroughly investigate all of the above optimization procedures and all of the theory behind

multistage processing of blood would be a formidable task. Instead since the intent of this dissertation is merely to discover the critical design parameters for blood separation and to conceptualize improved methods of blood separation, the discussion of theory and optimization will be limited. Some of the major similarities and differences between distillation and multistage processing of blood will be discussed, and then some simplified approaches for analyzing multistage blood processing will be set forth.

One important difference between distillation processes and multistage blood processing is that driving forces for the former are heat and gravity while with blood processing the driving forces are flow and centrifugal force. Another important difference is that the condenser and reboiler sections are replaced by recycle streams for blood processing. Also in blood processing there are no vapor streams present. Instead there are "light end" streams richer in slower sedimenting components and "heavy end" streams richer in faster sedimenting components for each stage. Note also that the "light" and "heavy end" streams of adjacent stages do not come in contact on a plate as in distillation, but are mixed in the feed line or at the entrance of a stage.

Similarities between the two processes exist with how component separations take place. As is the case with distillation the rectifying portion of a stagewise centrifugal process will provide for a gradual enriching of the lighter components. For example, when whole blood is the feed stream to the process, an enriching of the WBC's and platelets (lighter components) and a decrease in concentration in the RBC's (heavier components) should occur.

The stripping section of a centrifugal process would provide for the enriching of the heavier or faster sedimenting component with a stripping out of the lighter or slower sedimenting components. For a centrifugal process consisting of just a stripping section, a bottom product (left most "heavy end" stream of Figure 16) of pure RBC's void of any other cellular components might be expected. However, the "light end" stream from the feed stage would not be very pure in the "lighter" components. Although a high fractional recovery of "lighter" or slower settling components might be obtained at the feed stage, these components would be diluted with "heavier"

or faster settling components. Combining the rectifying portion and the stripping portion with the feed stage at the center would form what resembles a fractionating column. Thus a bottoms stream very rich in RBC's and a tops stream very rich in WBC's and platelets would be obtained. The bottoms stream could then be channeled to another multistaged separation process for separation of reticulocytes and older RBC's. Likewise the tops or "light end" stream could be processed through a series of other multistaged processes to separate it into various products such as platelets, granulocytes, lymphocytes, and monocytes. This is analogous to industrial processing where distillation trains are used for the separation of multiple component feed stocks into individual components.

As mentioned previously a distillation phenomenon analogous to a potential problem in centrifugal separations is the azeotropic condition. An azeotrope occurs in distillation when component concentrations are such that a constant boiling mixture is formed after which no further separations can be made. A similar condition may occur in centrifugal processing with the break up of the red cell rouleau. Rouleau

aggregates are broken up in regions of high shear rate generally felt to be above 5 sec^{-1} (80). Regions of high shear exist for high flow rates through small diameter tubes or for blood passing through a peristaltic pump. Due to the great amount of interstage pumping and passage through small diameter interstage tubing, rouleau breakdown could potentially be a major deterrent to multistage processing.

There are ways, however, in which the problem of rouleau breakdown may be reduced. One method would be to position the pumps such that they will be handling the higher hematocrit streams. The higher hematocrit streams would be those coming off the "heavy end" of each centrifugal stage. "Light end" streams would then pass from stage to stage because of material balance as was illustrated in Figure 16. Another aid would be to avoid the use of tubing which has diameters small enough to induce shear rates above the limiting value of 5 sec^{-1}. A formula for the maximum shear rate based on tube radius is given below[57]:

$$\gamma = - \frac{4Q}{\pi r_o^3} \qquad (36)$$

where: γ = shear rate (sec^{-1})

Q = flow rate (ml/sec)

r_o = tube radius (cm)

Thus for a flow rate of 10 ml/min the minimum tube radius required to keep shear rates below the 5 sec^{-1} value would be about 3.5 mm.

Another method of combating the problem is to use rouleau enhancers or sedimenting agents such as hydroxyethyl starch (HES) or dextran. As previously stated; however, the future use of sedimenting agents may be restricted. An alternative solution to the problem of rouleau breakdown might be to take advantage of the fact that the rouleau disassociate. Process conditions could be set so that the top end product is removed as a mixture of WBC's and RBC's just before major rouleau disassociation occurs. The stream could then be subjected to high shear rates so that all of the rouleau are broken down. Once this is done the WBC sedimentation rate will exceed that of the RBC and the process stream could be channeled to another stage-wise separation unit where WBC's becomes the "heavy end" product and RBC's the "light end" product.

4.3.2. Development of Simplified Approaches and Implications

In order to more fully understand multistage processing a stripping section will be analyzed in order to determine how process efficiencies might be affected for white cell harvesting. The stripping

section is a critical section since it must have the capacity to send the majority of the feed WBC's to a rectifying section in order for a process to be made efficient.

Figure 18 illustrates a model stripping section where patient blood is processed through a series of six stages. To demonstrate how white cell separation efficiencies are affected by a stripping section the analysis for the model process in Figure 18 will be simplified. For this simplification all "heavy end" and "light end" flow rates are assumed to be constant throughout the process. "Light end" streams will be assumed to consist of WBC's from the buffy coat and plasma only. "Heavy end" streams are assumed to be at constant HCT throughout the six stages. Because process "light and heavy end" flow rates and HCT's for these streams are assumed to be constant, the fractional recoveries f_w for each stage will also be constant. The fact that all f_w values are equal simplifies the solution of mass balance equations to find the overall efficiency of the process for separating WBC's. An equation for the efficiency of the six stage process derived from mass balance equations appears below:

$$\varepsilon = \frac{1 + (1-f_w)/f_w^5 - 3(1-f_w)^2/f_w^4 + (1-f_w)^3/f_w^3}{1 + (1-f_w)/f_w^6 - 4(1-f_w)^2/f_w^5 + 3(1-f_w)^3/f_w^5} \qquad (37)$$

Figure 18. Stripping Section for Harvesting WBC's and Platelets. For this,"light end" streams containing buffy coat and plasma are routed through the stages counterflow to the heavy end streams. WBC's are harvested in a stage while concentrated RBC's and platelet rich plasma are re-infused to the patient. In order to decrease the loss of WBC's and platelets "heavy end" streams can be passed through successive stages.

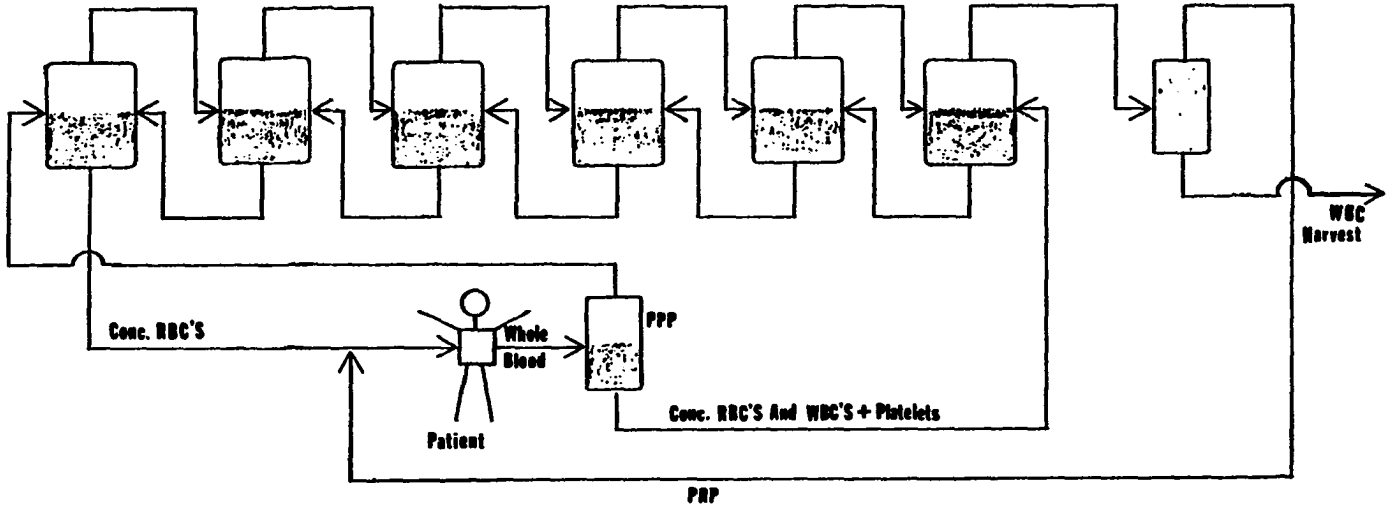
WBC
Harvest
Conc. RBC'S
Whole
Blood
PPP
Patient
Conc. RBC'S And WBC'S + Platelets
PRP

Figure 18

Figure 19 shows that with this model that overall efficiencies are drastically increased especially as the single stage f_w value exceeds a value of 0.4. The efficiencies for a six stage stripping section are compared to those for when the white cells are separated from each "light end" process stream before it is routed to its successive stage (process shown in Figure 20). The relationship describing this removal of buffy coat from successive stages is as follows:

$$\varepsilon = 1 - (1-f_w)^6 \qquad (38)$$

Referring back to Figure 19, it is observed that the removal of buffy coat from each successive stage is more efficient than the stripping section. However, one must realize that the latter process is far more complex involving additional stages for WBC concentration as well as additional pumping to handle more process flow lines. One must decide if it is worth sacrificing simplicity in order to improve the efficiency.

In any event, even these simplified approaches show that various multistage processes may have potential application. A more detailed analysis of multistage separation is beyond the intent of this dissertation. The intent at this time is to show that such processes

Figure 19. WBC Collection Efficiency for a Stripping Section and Collection from Successive Stages. A six stage stripping section shows increased efficiencies over those for a single stage process. Even better results are obtained when the buffy coat is collected after each stage and only platelet rich plasma is routed to the next stage. Such a process would add a great deal of complexity, however.

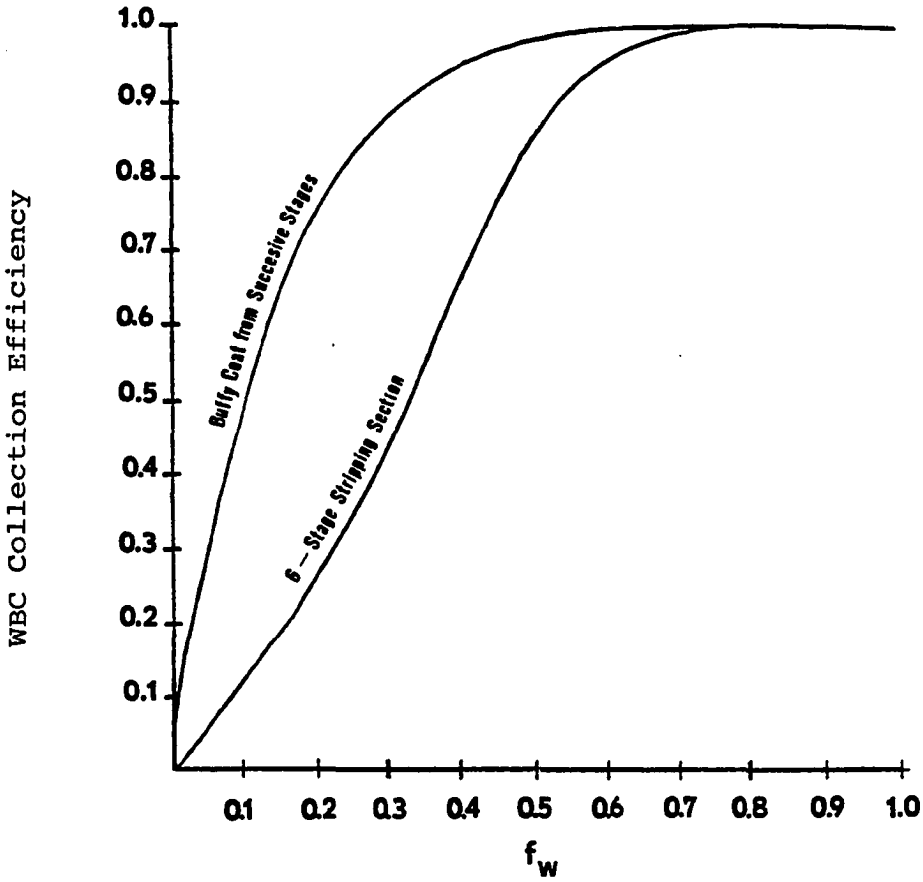
WBC Collection Efficiency
1.0
0.9
0.8
0.7
0.6
0.5
0.4
0.3
0.2
0.1
Bulk Coat from Successive Stages
6 – Stage Stripping Section
0.1
0.2
0.3
0.4
0.5
0.6
0.7
0.8
0.9
1.0
f_w

Figure 19

Figure 20. Collection of Buffy Coat from Successive Stages. Process efficiencies can be further increased by concentrating and collecting the buffy coat before each "light end" stream is routed to its successive stage. The complexity and excess volume requirements for this process may cause severe limitations in its potential applications, however.

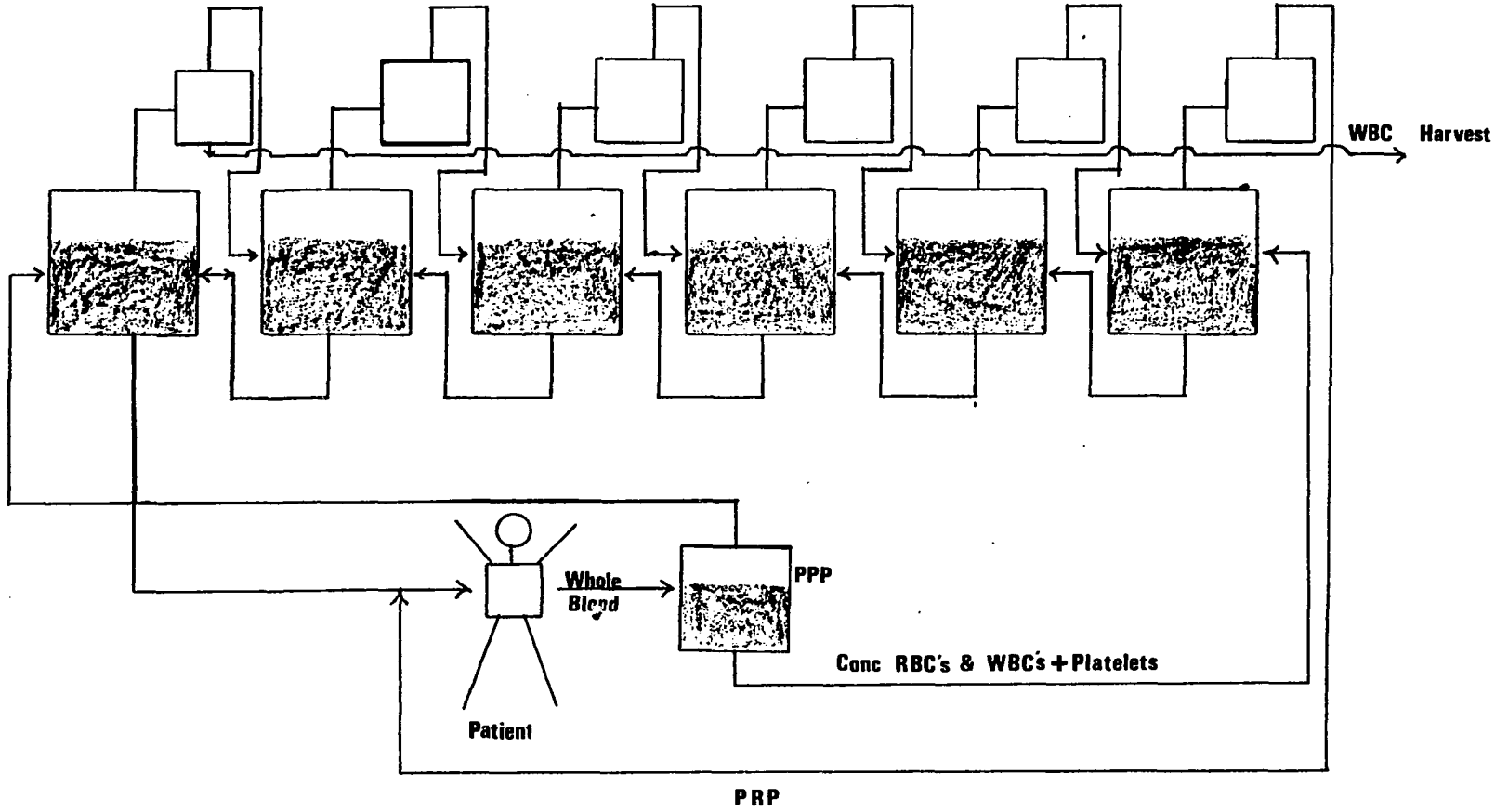
WBC Harvest
Whole Blood
PPP
Conc RBC's & WBC's + Platelets
Patient
PRP

Figure 20

have potential application. Such processes will most likely prove to be even of greater importance when it is desired to separate closely related cell types from each other.

4.3.3. Potential Stagewise Process Designs

Process designs for stages in series and multi-stage apparatuses are many and varied. Several potential designs are presented and discussed in Appendix A. First, a brief description is given for a series of schematic illustrations of each potential process design. This is followed by a more detailed discussion of each.

Chapter V

EQUIPMENT AND METHODS

5.1. EXPERIMENTAL EQUIPMENT

A dual stage continuous seal-less centrifuge was constructed which has the capability of being used at 200-2000 rpm. The device is nearly identical to one which has been constructed and patented by the National Institute of Health in Bethesda, Maryland. The only design alterations were the use of a different motor to drive the centrifuge, and a slight design modification so the centrifuge could be attached to from the top and the bottom. A 1/4 Hp Bodine Electric Co. motor (Chicago, IL) was used to drive the centrifuge instead of one manufactured by Electro-craft Corporation (Hopkins, MN). The Bodine motor was found to be more economical. The ability to attach to the top of the centrifuge was desired so that potential vibrational problems could be reduced. It was found however, that vibrations were low enough so that the centrifuge could be run without attachment from the top.

Features of the device include a dynamic bearing balance system to reduce vibrations, the use of multi-lumen tubing for entrance and exit streams to the blood chamber, three individually controlled peristaltic pumps for control of process streams, and an antitwister mechanism to allow for direct connection of the tubes to the top of a rotating centrifuge rotor without any twisting or shearing. Since the blood no longer has to pass through a rotating seal, this seal-less design can offer increased blood flow-rates as well as increased revolutional speeds without a corresponding rise in shear stress.

The concept of an antitwister mechanism was first conceived by Adams (85) and was patented in 1971 for use in supplying electrical contact to a rotating device with continuous wires. Since then, the idea has been extended to blood separations (60,61).

The principle may be explained by first imagining two or more flexible tubes of three foot lengths attached to a solid support. The tubes are attached at a second point one foot down to the inside of a hollow shaft. If the hollow shaft is contained in the outer edge of two stacked ten-inch long rotating blades having an angular velocity of $+\omega$ then the hollow shaft must be counter-rotated at an angular velocity of $-\omega$ to keep the tubes from being twisted. Now the remaining two feet of tubing is looped

to form a U-shape so that the free ends pass through two holes located on the central axis of the stacked rotating blades. If the free ends of the tubes are allowed to rotate independently from the blades, one will find that the tube ends will be rotating at an angular velocity of $+2\omega$. Now if the free ends of the tubes are held within a second hollow shaft rotating at $+2\omega$ and on top of the shaft rests a centrifuge rotor, one can have a blood centrifuge with tubes available for a continuous supply of fresh blood and for the continuous removal of separated components.

The centrifuge head design (also patented by NIH) consisted of two silicone blood chamber inserts supported by aluminum retaining walls to form two spiral-shaped blood processing chambers.

5.2. METHODS

5.2.1. Experimental Procedures

The two chamber design was used to obtain all of the experimental process data for single stage, recycle, and stagewise processing. Blood feed streams entered at an intermediate diameter of the spirals while faster settling cellular components were harvested from the outermost diameter and slower settling components from the innermost diameter.

Blood chambers and connecting tubing were primed with isotonic saline before each run. Either bovine blood or human blood anticoagulated with citrate dextrose was used for the experimental runs. Feed blood was held at body temperature by immersing the feed blood container in a controlled temperature bath. Blood in the feed reservoir was kept from settling by constant stirring with a motorized propeller or by intermittant stirring by hand with a plastic stirring loop.

Centrifuge operating rpm for all of the experimental runs considered in this dissertation was held at or near 1500. Process flow rates were controlled either with one of the three precision controlled pumps (flow rates could be adjusted to 0-130 $\pm$ 0.5 ml/min), or with a heart pump.

5.2.2. Experimental Sampling Procedures and Sample Analysis

Process samples could be taken from all process lines, the feed and product reservoirs, and from the blood chamber itself when centrifuge rotation was stopped. Process stream HCT's were found with the use of a Micro Hematocrit Centrifuge Model MB (International Equipment Co., Needham Heights, Mass.) and a micro hematocrit reader similar to the one shown in Figure 21.

Figure 21. Micro Hematocrit Reader. The micro hematocrit reading can be obtained by setting the hematocrit capillary vertically on the chart such that the bottom of the red cell end is on the zero line and the top of the plasma end is on the 100 line. The line which passes through the red-cell buffy-coat interface indicates the percent HCT.

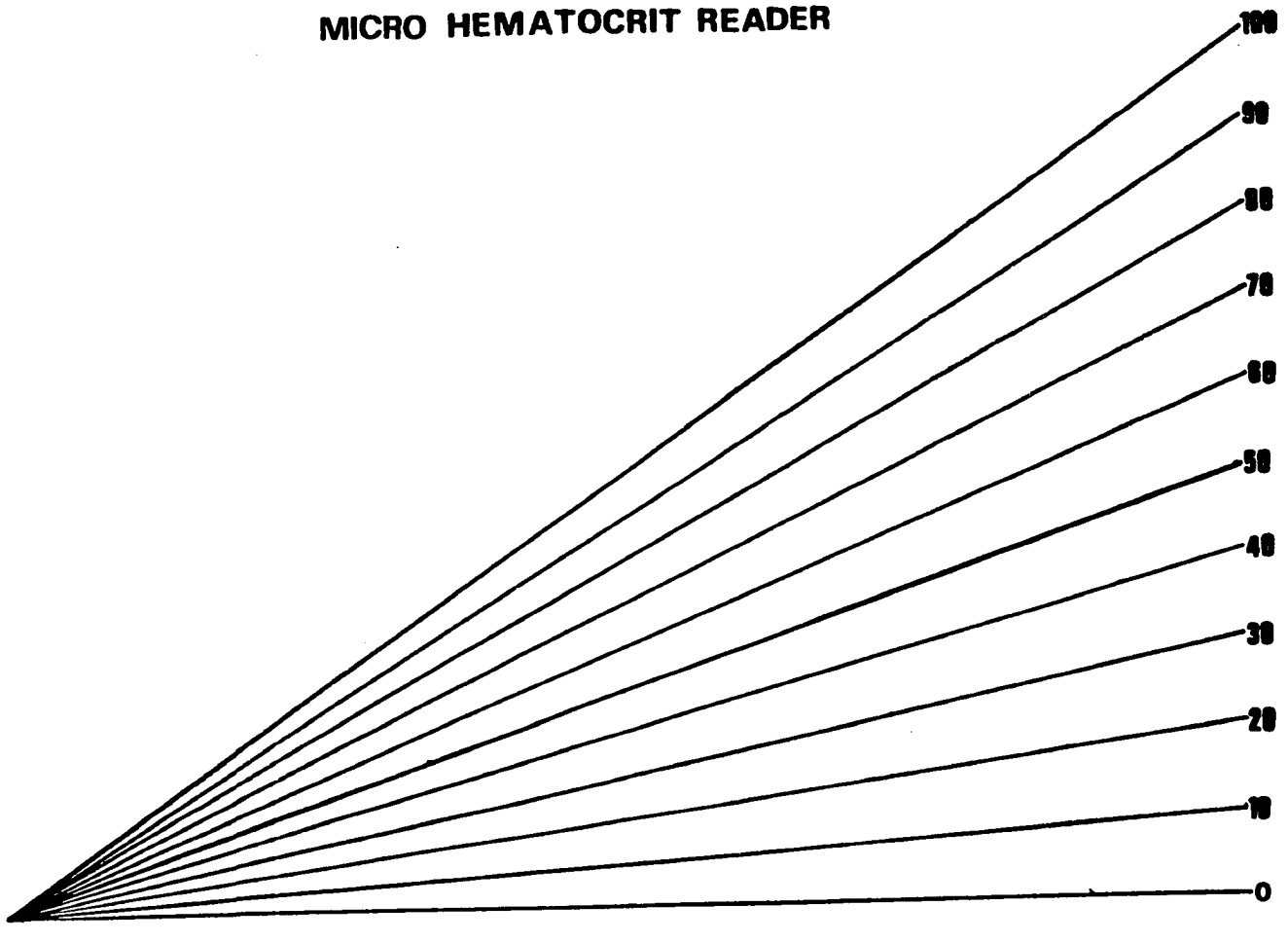

Figure 21

Sample RBC and WBC counts were analyzed with a Coulter Counter Model ZBI (Coulter Electronics, Inc., Hialeah, FL).

Identification of leukocyte types in process samples was determined with differential staining techniques under a microscope using Wright's Stain. Granulocyte viabilities were determined by the ability for granulocytes to phagocytize iron carbonyl particles. Basically the viability test is performed by comparing the difference in WBC concentrations for a sample containing micron sized iron particles with a control sample having no iron particles. Viable granulocytes will phagocytize the iron making them heavier and more likely to settle quickly to the bottom of a test tube containing the sample. Further details for the viability study are described by Woltjes (77).

Experimental data used for studying and developing potential process designs was taken when the process reached steady state. Steady state conditions were determined by checking for constant HCT's and cell concentrations for the various process exit streams. For most studies the time required to reach steady state varied between 5 and 15 minutes.

CHAPTER VI

RESULTS AND DISCUSSION

Experimental runs were performed with a continuous seal-less centrifuge using the two-chambered spiral rotor. These runs were performed to evaluate the design parameters and to test design hypotheses set forth in the design analysis section of this dissertation. Enough preliminary data was obtained in order to shed light on which design parameters are most important and which proposed processes show the greatest potential for future application. All experimental work was aimed at optimizing white cell separations, but hopefully the information gained can be readily extended to the separation of other cellular components as well. The potential application to other particulate separations is also a possibility. Following is a discussion and evaluation of the results obtained from these experimental studies.

6.1. SINGLE STAGE OPERATION

6.1.1. Effect of Red Cell Hematocrit on Separation

A series of runs were made with bovine blood diluted with isotonic saline to determine the effect of HCT on cell separations. An ideal way to observe the effect of HCT on cell separations is to plot experimental red and white cell recoveries for the "light end" (innermost diameter) of a single spiral chamber as a function of percent flow out the "light end". Such plots can be used to check for changes in red cell sedimentation velocity and red and white cell separations as a function of HCT. For instance, an increase in red cell sedimentation velocity would require higher "light end" superficial velocities and plots should therefore show a shifting to the right for higher red cell sedimentation velocities. Increases in red and white cell separation ability would be indicated by increases in the difference between white and red cell fractional recoveries. Figure 22 plots the f_r and f_w values for these runs with hematocrit as a parameter.

Several interesting conclusions can be drawn from Figure 22. In examining the figure two trends seem to be prevalent. With the exception of the 16 HCT run, the curves show a generally increasing relative

Figure 22. Fractional Recovery Data for the "Light End" of a Spiral Chamber. "Light end" fractional recovery data are plotted for 16, 27, 35, 38 and 41% HCT feed blood which has been diluted with saline. The blackened-in points representing white cell recoveries in every case except for the 16 HCT show that white cell recoveries are higher than those for the red cells (open points). This verifies that white cells have a slower settling velocity than red cells except for where red cell rouleau size is significantly reduced as is suspected for the 16 HCT run. As HCT is reduced the curves seem to indicate a general increase between red and white cell recoveries. The curves also show a shifting to the right (higher % flow out (light end") with HCT showing that cell sedimentation velocities increase with a decrease in cell concentration.

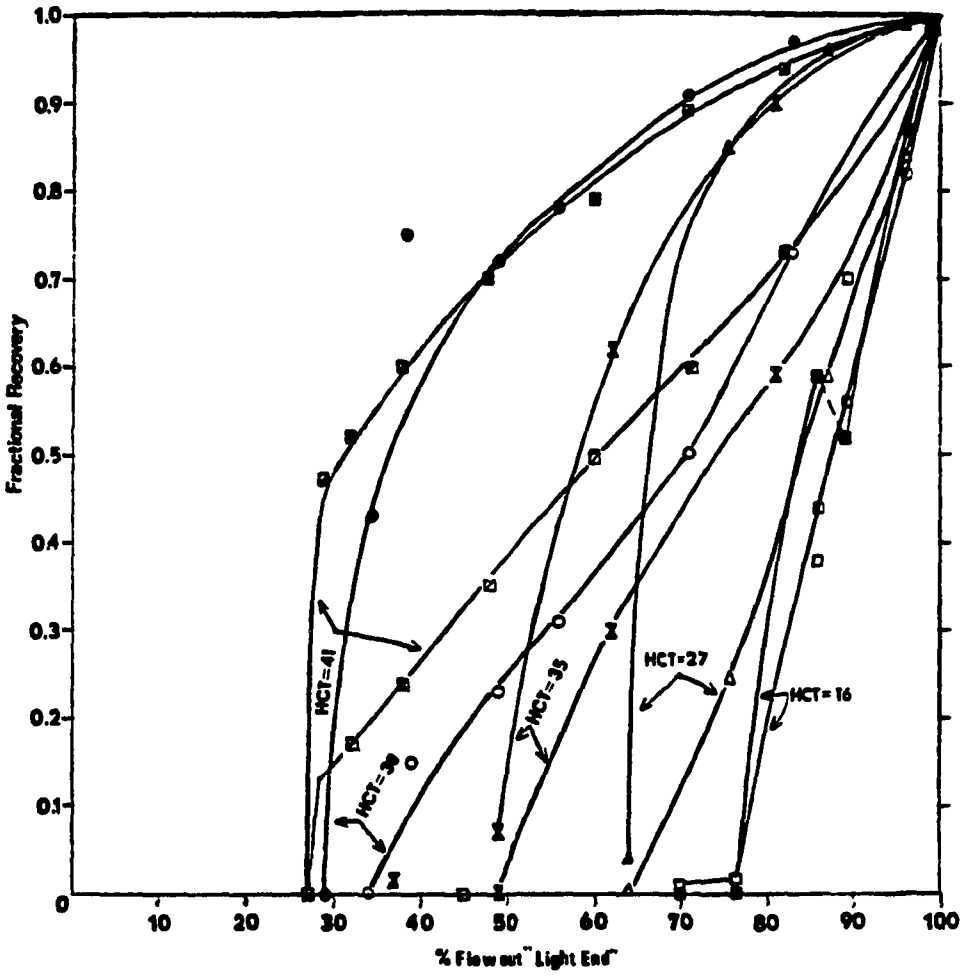
Fractional Recovery
1.0
0.9
0.8
0.7
0.6
0.5
0.4
0.3
0.2
0.1
0
10
20
30
40
50
60
70
80
90
100
% Flow out "Light End"
HCT=41
HCT=27
HCT=16

Figure 22

difference in the f_w and f_r values with decreasing HCT at a given percent flow. Secondly, the flux point (point at which cellular species first appear out the "light end") is shifted to the right for decreasing HCT. Percent flow at flux points and maximum relative difference between f_w and f_r appear in Table 8 for the different HCT's.

The general increase in maximum relative difference in (f_w-f_r) supports the hypothesis that white cells can more readily be separated from red cells at lower than normal HCT's. This, of course, is due to the fact that cell-cell interactions are reduced at lower HCT's allowing the sedimentation velocity for the denser, larger red cell rouleau to be much larger relative to that of the white cells. As HCT continues to be reduced, however, a point is reached where red and white cell sedimentation velocities begin to approach each other. This appears to be the case for the 16 HCT run where the two fractional recovery curves begin to overlap. It is at this point that azeotropic-like conditions result because rouleau size has decreased significantly as cell interaction frequency declines.

From the previous analysis set forth in the approach development section, the azeotropic-like condition is not expected until much lower HCT's. This can probably be attributed to the addition of saline diluent

Table 8

Experimental Fractional Recovery Data as a Function of HCT for Saline Dilutions

HCT (% RBC's)	F (ml/min)	% LE Flux	$(f_w-f_r)_{max}$	%LE @$(f_w-f_r)_{max}$
41	28	29-29	0.36	38
38	24	32-38	0.49	49
35	20	49-62	0.37	81
27	22	64-76	0.53	76
16	30	45-70	-0.36/0.21	70-99

which in turn causes a dilution of the plasma proteins normally responsible for rouleau formation. If plasma diluents were used instead, the azeotropic-like condition will probably not occur until the lower HCT's.

The shift in flux point to the right with decreasing HCT in Figure 22 adds further verification to the fact that cell sedimentation velocities are increased with decreasing HCT. Therefore, in order for cellular components to be carried by the plasma out the "light end" of the blood chamber, a greater "light end" superficial velocity must exist to compensate for the increased sedimentation velocities.

Fractional recovery data can also be plotted for the "heavy end" as a function of "light end" percent flow. Two such plots appear in Figures 23 and 24 for the 41 and 37 HCT runs. These plots show red cell recoveries to be greater than the white cell recoveries and are almost reverse images of the "light end" plots. Note that there is a similar widening of the red and white cell fractional recovery difference with a decrease in HCT. Again, this is due to the greater relative difference in sedimentation velocities for the red and white cells.

Figure 23. "Heavy End" Fractional Recovery Data for 41% HCT Feed Blood. Blackened-in points representing red cell recoveries show higher values than for the white cells (open points) for the "heavy end" stream. This of course is due to the faster settling velocity for the red cells. Note that white cell recoveries show an immediate tapering off while red cell recoveries show a slope of zero until the flux point is reached. The reason for this is that all of the red cells exit the "heavy end" up until the flux point, but a fraction of the white cells are isolated in the centrifugal blood chamber in the buffy coat.

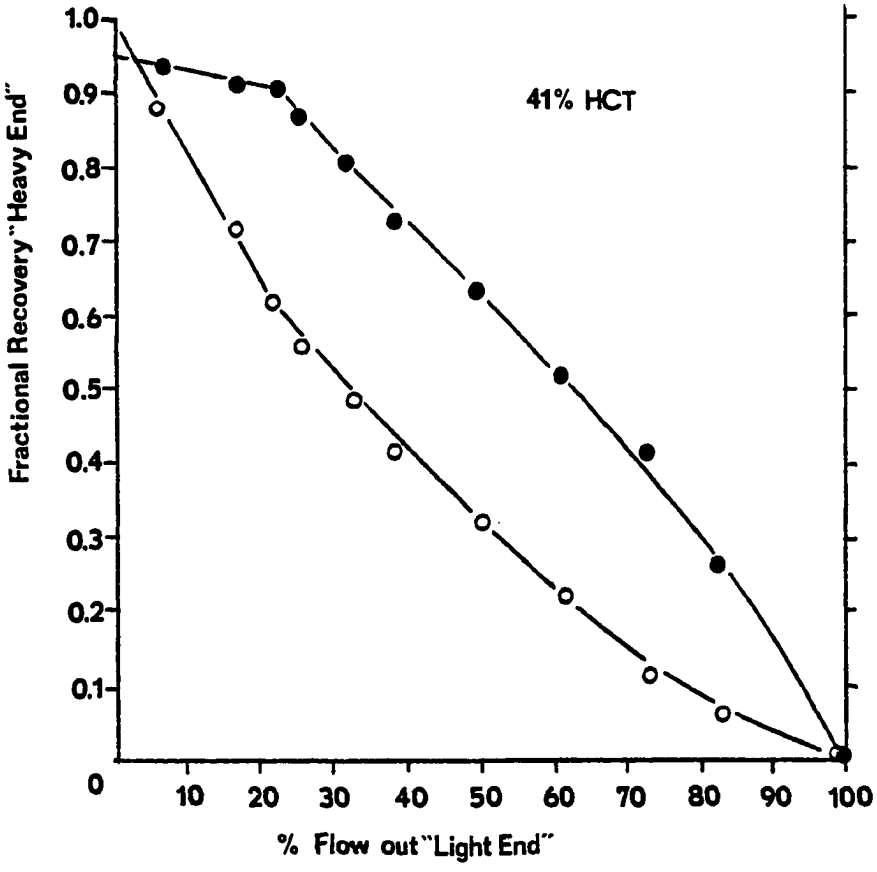
41% HCT
Fractional Recovery "Heavy End"
% Flow out "Light End"
1.0
0.9
0.8
0.7
0.6
0.5
0.4
0.3
0.2
0.1
0
10
20
30
40
50
60
70
80
90
100

Figure 23

Figure 24. "Heavy End" Fractional Recovery Data for 38% HCT Feed Blood. Blackened-in points for red cells again show higher recoveries than those for white cells when the "heavy end" product is analyzed. A greater difference between the red and white cell fractional recoveries is noted for this run which seems to indicate that the greater degree of separation for separation for red and white cells may be achieved as HCT is lowered.

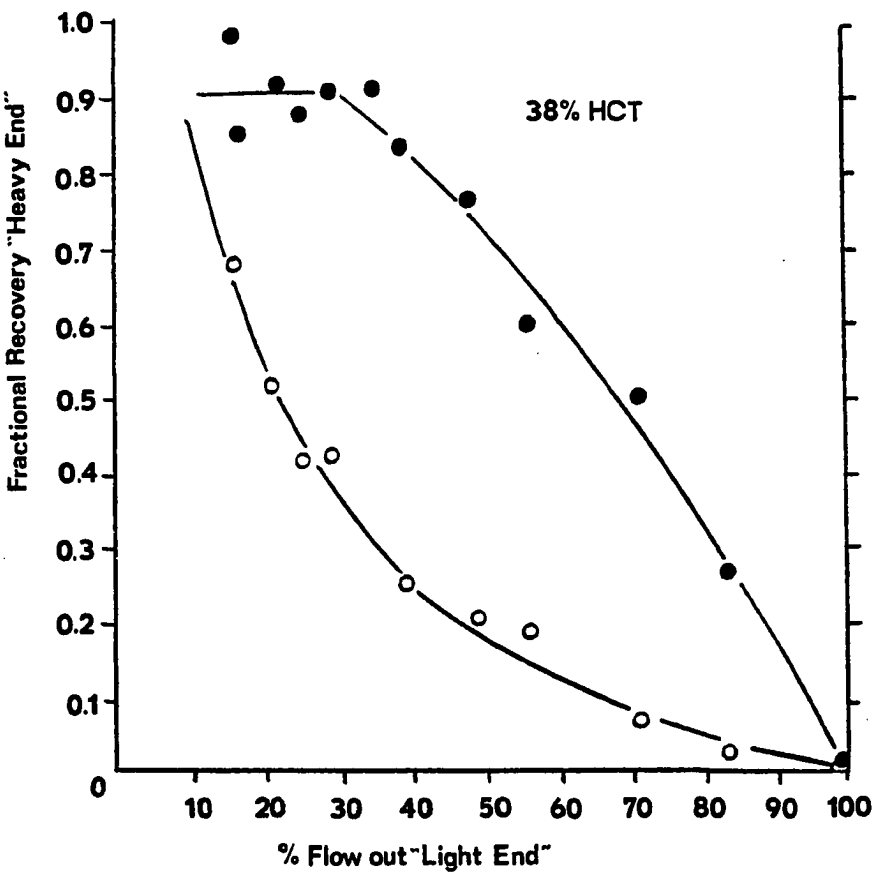
1.0
0.9
0.8
0.7
0.6
0.5
0.4
0.3
0.2
0.1
0
Fractional Recovery "Heavy End"
38% HCT
10
20
30
40
50
60
70
80
90
100
% Flow out "Light End"

Figure 24

6.1.2. Modeling of Experimental Results

A tremendous aid to optimization of a particular design is to curve fit the design data so that separations can be predicted with the use of appropriate equations. This can easily be done with the aid of Statistical Analysis System (SAS) on the University of Oklahoma computer. One begins with a function of the form

$$f_i = c[g(\%LE)]+d \qquad (39)$$

where:

f_i = fractional recovery of component i

g(%LE) = function appropriate for the shape of the plotted data

c&d = empirical coefficients

Table 9 shows the function, g(%LE), the empirical coefficients and the correlation coefficients for the f_w and f_r curves for the "light" and "heavy end" streams for the 45 HCT run.

The proposed functions for the streams fit the data very well with correlation coefficients of 0.964 for the "light end" WBC fractional recoveries and coefficient values above 0.99 for the other streams.

Table 9

Curve Fit of Empirical Data, 45 HCT Run

i	Stream	g(%LE)	c	d	r_c^2
R	"light"	%LE	0.011	-0.187	0.997
R	"heavy"	%LE	-0.012	1.203	0.992
W	"light"	ℓn(%LE)	0.504	-1.175	0.964
W	"heavy"	ℓn(%LE)	-0.450	2.067	0.992

Data can be similarly fit for other experimental runs. With the accumulation of much data over a wide range of HCT's the empirical coefficients will likely be found to be a function of HCT, rpm and feed flow rate. With such knowledge fractional recoveries may then be predicted for any set of operating variables. Furthermore systems can be easily optimized by subtracting first derivatives with respect to %LE, rpm and/or feed flow rate of the f_r function from that of the f_w function, setting this equal to zero and solving for the appropriate %LE, rpm and/or feed flow rate.

6.2. RECYCLE APPLICATIONS

6.2.1. Effect of Recycle on Efficiency

Table 10 summarizes experimental data for typical recycle runs to isolate WBC's in a buffy coat. Efficiencies for single stage operation with no recycle as well as for the operation of a single stage with recycle are represented in the table. The data indicate that substantial increases in fractional recoveries of WBC's can indeed be obtained through the use of recycle processing. These increases in fractional recovery of WBC's in the buffy coat range from 14 to 122%. Run number 1 showed excellent agreement with predicted recycle efficiencies from equation (30) with

Table 10

EFFECT OF RECYCLE ON WHITE CELL RECOVERIES

Blood Type	HCT (feed)	R	$\varepsilon_{S.S.}$ (%)	$(\varepsilon_R)_{th}$	ε_R (%)	% Dev. from Prediction	Percent Increase
Bovine	33	4.8	32	73	71	2.7	122
Bovine	37.5	5.8	49	86	77	10.5	57.1
Bovine	24	7.0	51	89	76	14.6	49.0
Bovine	27.5	9.5	62.1	94	70.5	25.5	13.5
Bovine	32	5.3	56.3	89	65.8	25.8	16.8
Human	37	4.3	39*	--	77		--

*Steady State Value is a Theoretical Prediction Based on Experimental Recycle Efficiency.

a deviation of less than three percent. Runs 2-5 while showing an increase in collection efficiency with recycle, are only in fair agreement with predicted values. Some of this may be due to excessive vibrations occurring in the centrifuge from time to time. Another contributing factor may be the dilution of plasma proteins with the addition of anticoagulant to the blood.

Due to errors in data taking the efficiency for the single stage, non-recycle case could not be calculated for the run with human blood. The recycle efficiency of 77% is rather high, however, compared to clinical studies without recycle where efficiencies vary between 20 and 40 percent. The corresponding predicted non-recycle efficiency of 39% is within the range obtained from clinical studies, and therefore the 77% efficiency obtained for the recycle process using human blood is quite significant.

6.2.2. Isolation of Specific Leukocyte Types

Another interesting experimental result to consider is the effect of recycle on the isolation of specific leukocyte types in the buffy coat. For this consideration the relative numbers of granulocytes and lymphocytes are looked at for runs 1 and 2 of Table 10.

For run number 1 it was found through differential staining techniques that lymphocyte and granulocyte yields are 57% and less than 1% respectively when the results were analyzed for the non-recycle case, and 85% and 33% respectively for the case with recycle. Similar increased yields for both cell types with recycle are indicated for run number 2. Run 2 showed 22% and 80% recoveries for lymphocytes and granulocytes respectively when the results were analyzed for the non-recycle case, and 73% and 94% respectively for the recycle case. Thus results indicate that substantial increased recoveries can be obtained for both of the major white cell types that would be desired to be harvested in a blood separation process.

6.2.3. Effect of Recycle on Cell Viability

The effect of recycle processing on cell viabilities is also important. The seal-less blood centrifuge has been demonstrated by Kolobow and Ito (53) to have little adverse affect on cell viabilities for single stage and dual stage processing. There is really little difference between Kolobow and Ito's work and the recycle process. The same number of pumps are used for the dual stage operation as for the recycle process. Nevertheless, a test for granulocyte viability was performed for the recycle experimental

run with human blood. Tests revealed a 40% loss in the ability of granulocytes to phagocytize mircon sized iron particles. Part of this loss is probably due to the recycle process. Some of the loss however, can probably be attributed to the fact that non-sterile tubing and blood chambers were used for the process. Viability studies should be repeated for the non-flow case where blood is left sitting in a non sterile blood chamber for the period of time which it takes to do a recycle run. Further studies should be performed with sterilized tubing and chambers.

6.2.4. Concluding Remarks Regarding Recycle Processing

Higher recycle efficiencies than those found experimentally might be obtained if enough plasma was recycled to reduce HCT to the feed chamber down to values which will provide for optimum white cell fractional recoveries. The optimum HCT predicted from Figure 8 in the approach development section is between 15 and 20%. Runs should be made over the full range of HCT's to determine the optimum conditions for recycle processing.

Another interesting conclusion from the experimental viability study is that a large percentage of granulocytes were indeed isolated in the buffy coat for the recycle run with human blood. Of the white cells

isolated in the centrifuge head 44% were viable granulocytes, while the WBC's in the feed blood were comprised of approximately 60% viable granulocytes. This means that at least 69% of the granulocytes were isolated in the centrifuge head. Since the particular viability assay used only registers the viable cells, the actual number of granulocytes isolated in the head could even be higher. The isolation of 69% of the granulocytes is higher than that for any other existing leukopheresis device. The highest reported values have been those achieved by Fenwal Corporation (58). Fenwal representatives report granulocyte recoveries of 62% which are much higher than those reported by anyone else. However, Fenwal's high recoveries were accomplished with the use of red cell sedimenting agents, while the recycle recoveries were not. Further studies need to be done to verify the high recoveries of granulocytes with the recycle process. This preliminary design data for the recycle process is quite promising, however.

As previously discussed in the approach development section a design limitation of recycle processing is the higher blood chamber volume requirements needed at higher recycle rates. As recycle rate increases so does the volumetric flow through the blood chamber. Therefore to keep residence times constant in order for

adequate separation to occur, cross-sectional areas and therefore total volume of the blood chamber must be increased. The above runs were performed with system feed rates of 2-5 ml/min. With recycle rates of 5-10, the blood chamber feed flow rate was increased to about 25 ml/min. For this process to be clinically applicable system feed rates would have to be increased to 50-100 ml/min. It would also be desirable to look at much larger recycle rates for this process. Therefore, additional experimental runs should be conducted with blood chambers of increased cross-sectional area to determine whether the larger system feed flow rates and larger recycle rates can indeed be accommodated.

6.3. PROCESSING WITH STAGES IN SERIES

6.3.1. Discussion of Experimental Study

The two-chambered centrifuge head was used to obtain experimental fractional recovery data for a pseudo six-stage run. Effluent from the "light end" of the first stage was routed to the second stage while effluent from the "light end" of the second stage was collected. "Heavy end" effluents were sampled and discarded but the collected "light end" effluent from the second stage was saved and later used to make a second similar run through the dual-staged operation.

"Light end" effluent from the second stage again was saved for a third run. Thus six stages were passed through in all with a decreasing feed HCT to each successive stage.

Experimental fractional recovery data were determined for the pseudo six-stage run and are summarized in Table 11. As predicted in the process development section fractional recoveries for the white cells, f_w's, could be kept relatively high through each successive stage when the percent flow out the "light end" was kept high. Fractional recoveries for the red cells, f_r's, were always lower than those of the white cells except for the case at 2% HCT. Here the f_w value shows a sharp drop to zero and f_r is just above zero. The low value for f_w can be explained by Figure 6, where low white cell recoveries can be expected because white cell sedimentation velocities are highest at the lowest HCT's. Since WBC sedimentation velocities are high it will take a greater "light end" superficial velocity in order for any white cells to be carried out the "light end".

The fact that the red cell recovery is not significantly different from the white cell recovery at the 2% HCT lends credence to the hypothesis that an azeotropic-like condition will occur at the low HCT's.

Table 11

EXPERIMENTAL FRACTIONAL RECOVERY DATA FOR SIX STAGES OF OPERATION

Stage #	F (ml/min)	HCT_F	% LE	f_w	f_w!	f_r	f_r !	$f_w - f_r$
1	50	37	82	0.88	0.88	0.74	0.74	0.14
2	40	30	93	0.95	0.84	0.87	0.64	0.08
3	50	25	88	0.95	0.79	0.71	0.46	0.24
4	43	17	85	0.86	0.68	0.41	0.19	0.45
5	50	10	90	0.87	0.59	0.25	0.05	0.62
6	45	2	86	0.0	0.00	0.04	0.00	-0.04

This, of course, is explained by the dissociation of the red cell rouleau. The fact that f_r is slightly above zero may even indicate that rouleau size is now so small that white cell sedimentation velocity has surpassed that of the red cell.

The overall fractional recoveries, f_w! and f_r!, are interesting. The point at which the least number of red cells remain and yet a reasonable amount of white cells are still present occurs at stage 5. Here 59% of the original WBC's are harvested out the "light end" while only 5% of the original RBC's are harvested. Since the "light end" stream has a HCT of 2% the separation is adequate to provide WBC's in a leukopheresis process (2). The fact that the WBC recovery of 59% is high compared to many conventional processes, shows that processing through stages in series may indeed have potential clinical application.

6.3.2. Process Design Alternatives

Of further interest would be to adjust the feed HCT to each stage to the optimum value for maximum red and white cell separation. The optimum feed HCT for separation can be found by locating the largest difference in f_w and f_r. The last column of Table 11 shows the maximum value for $f_w - f_r$ to be at the 10% HCT in the 5th stage. A plot of these values in Figure 25 reveals

Figure 25. Red and White Cell Fractional Difference vs HCT. For blood diluted with plasma the maximum fractional recovery difference for red and white cells appears at a HCT of around 10%. A sharp drop in fractional recovery difference for the 2% HCT indicates that an azeotropic-like condition occurs where smaller red cell rouleau size causes red and white cell sedimentation velocities to be approximately the same. Such a plot can be used to help determine the best HCT for optimum white cell separations.

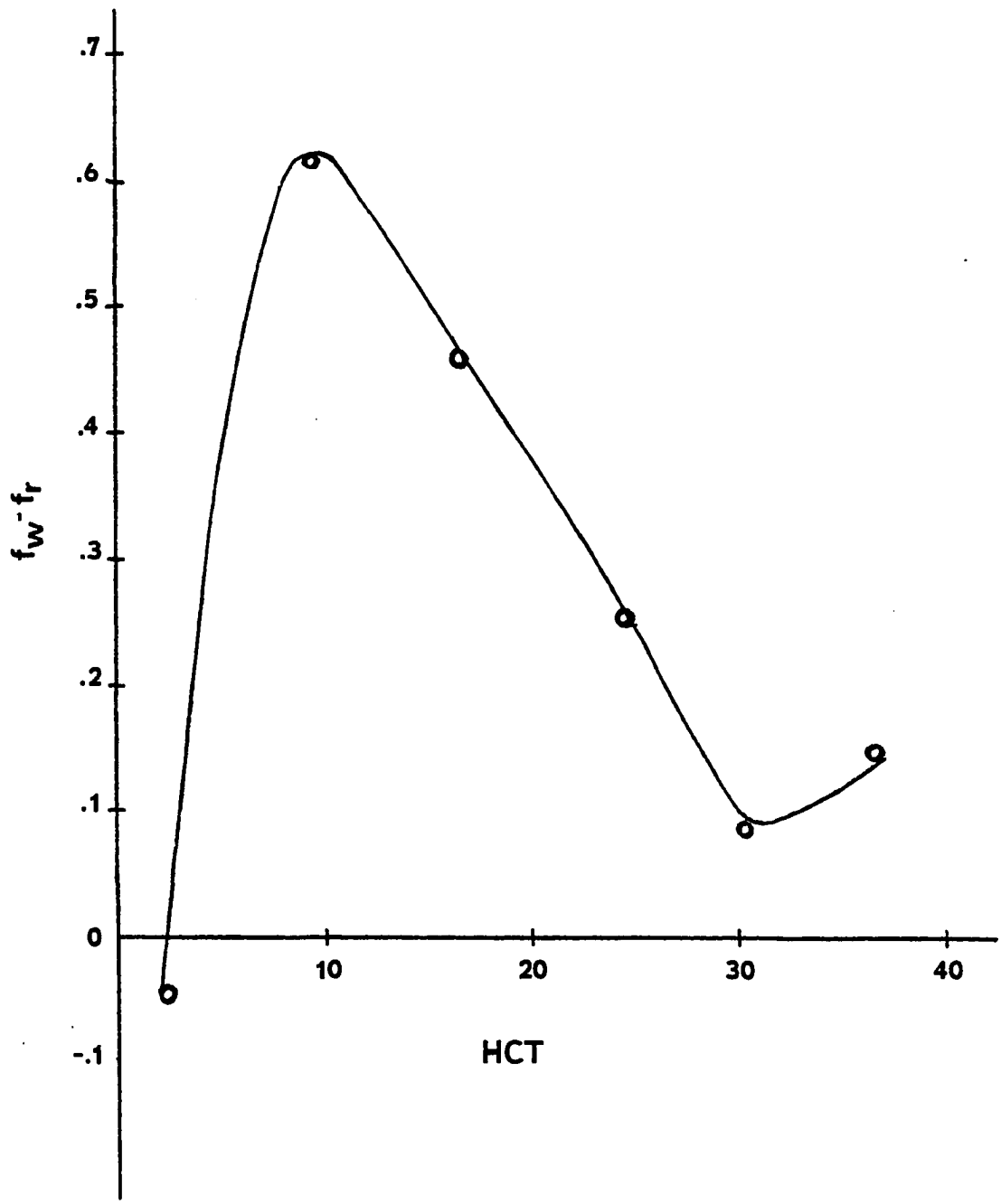

Figure 25

a peak at the 10% HCT with a tapering off both at extremely low HCT's and the higher HCT's. Again this supports the approach taken earlier where it is thought that separation of red and white cells at extremely low HCT's is rouleau limited while that at normal or higher than normal HCT's is cell interaction limited.

If the processing in each separation stage could be conducted at the optimum HCT for red and white cell separations, the process operation may be rendered much more efficient. This would have to be done by first diluting patient blood to the optimum HCT. Then following each separation stage, a cell concentrator stage would have to be inserted to remove enough plasma to bring the remaining cell suspension back to the optimum HCT.

Using the values tabulated in Table 11 one should theoretically be able to obtain a better overall degree of separation if only two separation stages were used to process 10% HCT blood. Using the f_w value of 0.87 and the f_r value of 0.25, the overall recoveries for the process are found to be 0.76 for f_w! and 0.06 for f_r!. When compared to the 5 stage operation the f_r! of 0.06 shows that the amount of red cells harvested in the second stage is still quite low. However, the amount of white cells harvested is 29% higher than that for the 5 stage process.

6.3.3. Concluding Remarks Concerning Stages in Series

These analyses show that the processing of blood through stages in series may have more potential than was originally thought. Certain other factors must be also kept in mind, however. One major consideration is the problem of process control. For example, the amount of interstage pumping that would be required for the stages in series may be excessive. To locate these pumps on the centrifuge head is impractical with the present state of technology. The other alternative is to locate pumps outside the centrifugal device, but this increases process volume because of excessive tubing. Economic factors may also play a role in that the cost of construction for a precision made multi-chambered apparatus may become excessive. These processes do show promise, however, and the complications caused by the above factors may prove to be insignificant when higher efficiencies and greater cell specificity are at stake.

6.4. MASS BALANCES FOR EXPERIMENTAL RUNS

The experimental analysis for any of the previous experimental process would not be complete without a look at the mass balances. Such an analysis is a critical part of any study. The investigator must be

assured that all cellular species are accounted for, and that some cells are not being lost due to excessive damage or are unexpectedly being isolated in the blood processing chamber. It must be kept in mind, however, that mass balances in biological systems may be slightly inaccurate due to slight fluctuations in cell concentrations in the feed blood. For instance where in vivo studies are performed a patient may show fluctuations in cell concentration even over short periods of time. Fluctuations may also be seen in in vitro studies due to settling of cells in the feed blood reservoir due to inadequate mixing. White cell counts may also fluctuate due to compliment activation causing leukocyte aggregation.

Despite some expected inconsistencies due to the nature of biological systems, mass balance calculations faired rather well. For single stage runs both red and white cell balances revealed that total cell numbers for exit streams were typically within 10% of total cell numbers in entrance streams. For example for the 41 HCT run shown in Figure 22 total white cell numbers for exit streams varied to within 0.2% to 8.6% from entrance streams. Total red cell numbers for exit streams varied to within 1.4% to 7.9% from entrance streams.

Mass balances for recycle runs and for stages in series also showed deviations between entrance and exit total cell numbers to be within 10% for most cases. Occasionally there were large losses in total white cells of up to 40%. Such losses, perhaps, may be attributed to the fact that blood samples were often not counted until sometime after an experiment due to the distant location of the nearest counting facilities. During this time white cells could have undergone compliment activation due to interaction with container surfaces which may have caused them to form aggregates. Such aggregates would drastically affect counter readings.

6.5. MULTISTAGE PROCESSING

The design and construction of an actual multistage rotor is beyond the scope of this dissertation project. The main reason for this is that there are many technical problems associated with the construction and operation of a multistage blood processor. Construction problems arise simply from the difficulty involved in the precision manufacturing of a complex multistage apparatus. Operating difficulties would arise from a control standpoint, since each stage will require at least one pump or precision control valve for adjusting flow rates of interstage process streams.

Nevertheless it is felt that the work presented thus far has revealed critical process design variables which will need to be taken into consideration in multistage apparatuses as well.

In the approach development section it was shown for a simplified stripping section that overall process efficiency should improve when f_w values from the single stage case are increased. This means that when blood is fed to the multistage process at more ideal HCT's for separation the overall process efficiency should improve when f_w values from the single stage are increased. This means that when blood is fed to the multistage process at more ideal HCT's for separation the overall process efficiency will probably increase as well.

One must be concerned however, with the dissociation of rouleau in multistage processing. One reason rouleau dissociation may have a greater likelihood of causing problems in multistage designs is because of the amount of pumping and/or valving that is required. There may not be sufficient time for rouleau to reform each time after cells go through a regime of high shear such as with a pump or a valve. Another potential contribution to rouleau dissociation is the fact that HCT's may become very low in the latter

stages of the rectifier section. Since rouleau formation is hindered by dilution an azeotropic-like condition is expected to occur.

In order to circumvent problems associated with rouleau dissociation, two solutions are proposed. One is to use sedimenting agents. The other is to route low HCT blood to a separate set of separation stages. In this second set of stages blood can be exposed to high shear so that all rouleau are deliberately dissociated. Now the white cell becomes the faster settling component. The process can then be designed so that red cells are the "light end" product and white cells the "heavy end" product.

Yet another design criteria for the multistage apparatus is the cross-sectional area of each stage. Cross-sectional areas must be adjusted so that superficial velocities will be matched for appropriate degree of separation of cellular species. Since HCT will vary from stage to stage, sedimentation velocities will vary as well and therefore superficial velocities will need to be appropriately adjusted for each stage.

As evidenced by the above discussion, the multistage process design seems to be the most complex of all of the proposed designs. Further work needs to be done

on the development of design strategy. Nevertheless, several design parameters have already been revealed as being very important to consider for such developments.

6.6. PROCESS COMPARISON

Figure 26 compares the efficiencies for separating red and white cells with various process designs. The efficiency for each process is plotted against the white cell fractional recovery for a single stage operation. This is why the plot for the single stage process has a slope of one.

From the figure it appears that recycle processes, stripping sections and the collection of the buffy coat from successive stages will all do quite well at higher values of f_w (above ~0.6). At lower f_w's (between 0.2 and 0.6), however, collection of buffy coat from successive stages and the higher recycle rates seem to do best.

At first glance the efficiencies for the stages in series do not seem to fair well when compared to single stage operation or any other process. One must keep in mind however, that the stages can be designed so that the f_w's are kept very high when the percent flow out the "light end" is high. This will mean that a fraction of the red cells will be carried over to each

Figure 26. WBC Collection Efficiencies for Various Processes. Processes using high recycle rates show the greatest increase in efficiency over that of the simple single stage process. Processes for stages in series also show good increases in efficiency if the relative difference between red and white cell fractional recoveries can be kept high for each stage. For instance if f_w could be kept at 0.95 and f_r at 0.5 for each stage, then after six sequential stages 74% of the WBC's would be recovered and RBC's would be reduced down to less than 2% of those contained in the original feed. Processes with lower recycle rates and the collection of the buffy coat from successive stages also show large increases in efficiency. The six stage stripping section only appears to become highly efficient at high values for f_w.

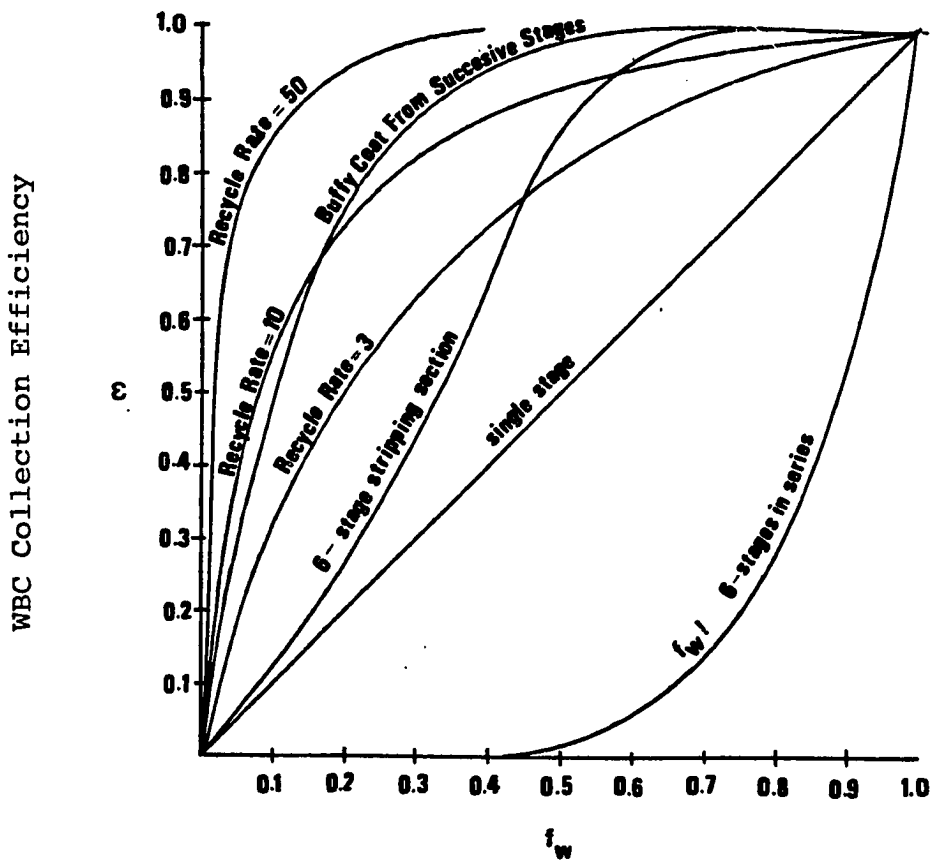
WBC Collection Efficiency
ε
1.0
0.9
0.8
0.7
0.6
0.5
0.4
0.3
0.2
0.1
0.1
0.2
0.3
0.4
0.5
0.6
0.7
0.8
0.9
1.0
f_w
Recycle Rate = 50
Recycle Rate = 10
Recycle Rate = 3
Bolfly Cost From Successive Stages
6 - stage stripping section
single stage
f_w / 6-stages in series

Figure 26

successive stage as well. However, the fractional recovery for the red cell, f_r, will be somewhat lower than that of a white cell. Therefore after a series of stages many of the red cells may have already been removed while overall white cell recoveries may still be very high. An example case would be where f_w is 0.95 for each stage and f_r is 0.5 for each stage. After six sequential stages the overall white cell recovery would be 74% while that of the red cells would be less than 2%. This is probably a much better separation than can be obtained with a single stage even when blood is processed at optimum feed HCT.

With all processes it will probably be desired to adjust the HCT of feed blood so that optimum separations may be obtained. Previously in the results section it was shown that optimum feed HCT may be between 10 and 20% for white cell separations. This also agrees with the analysis in the approach development section.

For platelet separations it appears from the theoretical development section that feed HCT's of 1 or 2% may be desirable. Predicted platelet recoveries for a single stage at these low HCT's are greater than 95%. If these high recoveries at low HCT's can be verified experimentally there may be no need to consider alterna-

tive processes for harvesting platelets. A single stage process may prove to be good enough since it is less complex and yet very efficient.

Other considerations, of course, must be taken into account. One major consideration is the excess volume requirement for these alternative processes. Previous discussions show that recycle processes will require substantial increases in blood chamber volumes. The least increase in volume requirement for recycle processes is for the case where shear rate is held constant and centrifuge rpm is increased to compensate for increased superficial velocities. With such compensation it appears from the approach development section that recycle rates of 50 or more can be accommodated. Special consideration must be taken however, for children or patients who already have critically low blood volumes. In such cases lower recycle rates may be necessary.

Other processes will probably not require as great an increase in volume. Additional stages for stagewise processing can be kept relatively small. Nevertheless the additional stages and interstage tubing requirements may become excessive in some cases rendering a process impractical.

Another major consideration is the complexity of these alternate approaches. Stagewise processing

of blood may prove to be too complex for the current state of technology. The pumping or valving requirements for the precise control of such processes are extreme. Monitoring of these processes as blood passes from stage to stage may even be more difficult. Recycle processing seems to add the least amount of complexity. Only one additional pump is required beyond that of a normal single stage operation. Difficulties may arise when the precise control of chamber feed HCT is desired however. Yet the additional problems associated with recycle processes are not expected to severely hinder their potential use. This is supported by the favorable cell yields in experimental runs. The technical problems which may be associated with stagewise processing need to be looked into further, however.

Other considerations such as the amount of rouleau dissociation with each process must also be considered. There may be a host of other problems yet uncovered which must be considered. Further study and experimentation will hopefully bring to surface additional problems and lead to their eventual solution.

Chapter VII

SUMMARY AND RECOMMENDATIONS

The immense need for improved blood separating capabilities creates an environment for revolutionary approaches to be taken. This environment is quite stimulating for an engineer whose background in process optimization and detailed mathematical approaches makes him adept at creating novel solutions. His concern for the definition of critical process design variables is another point in his favor.

Indeed this project has been successful in identifying several critical design variables and in developing the basis for several novel design approaches. The major design variables and approaches studied include: 1) determination of process stream HCT for optimum cell separations; 2) the effect of superficial velocity, shear rate and centrifuge rpm on separations; 3) recycle processing to improve separations; 4) stagewise processing to improve separations; and 5) design limitations due to volume requirements and process complexity.

Studies revealed that optimum WBC-RBC separations occur at lower than normal HCT's. At the normal or higher than normal HCT's separation was found to be cell interaction limited. For very dilute cell concentrations the separation was found to be rouleau formation limited. Furthermore experimental runs showed that optimum HCT's were lower for plasma dilutions than for saline dilutions. This was surmised to be caused by the dilution of plasma proteins responsible for rouleau formation when saline diluents were used.

In order to effectively separate red and white cells, blood chamber superficial velocities must be of an intermediate value between the sedimentation velocities of the red and white cells. An increase in superficial velocity can be compensated for by a corresponding increase in sedimentation velocity which is a function of the centrifuge rpm. Superficial velocities must not however, be increased beyond the point where shear rates become large enough to adversely affect rouleau formation.

Recycle processing was determined to be the most effective process studied for increasing WBC separation efficiencies. The degree to which a recycle process is effective of course was found to depend upon the recycle rate. From these initial studies, processes with recycle rates of 50 or more are expected to show superiority

over other processes. It is believed that patient-machine connection time may be reduced by more than half with recycle processing.

Stagewise processing although not quite as promising as recycle processing was also shown to have the potential of increasing process efficiencies. For instance, stages in series were shown to have great potential application especially when operated at optimum HCT's. HCT's would need to be adjusted for the feed stream and then readjusted between each stage in order for the most efficient separation to be accomplished. Multistage processing was given a very qualitative analysis, but also showed potential application.

The major design limitations are felt to be excess volume requirements and design complexity. Recycle operations are the least complex of the alternative designs considered, but require excessive volumes. Stagewise processing may also require excessive volumes if too many stages are needed for adequate separation and if interstage tubing volume is excessive. At least some of the stagewise processes discussed should not require an excessive amount of volume, such as the two stage series with an intermediate cell concentrating stage proposed in the results section.

On the other hand it is believed that stagewise processing will be far more complex than recycle or simple single stage processing from the standpoint of construction and process control.

Recommendations for future work include investigations for the processing of platelets and more specific cell types. It is believed that platelet processing may be most efficient at 1-2% HCT and may only require a simple single stage process to yield high efficiencies. The processing of more specific cell types: granulocytes, lymphocytes, other leukocyte species, reticulocytes and gerocytes need to be further investigated. The experimental results did show that both granulocytes and lymphocytes are present in recycle process buffy coats. Yet more study on how recycle processing, stagewise processing, and alteration of stream HCT's will specifically effect the harvesting of granulocytes, lymphocytes and other cell types needs to be performed.

Another recommendation for future work is a thorough investigation of the effect of proposed processes on cell viability. Excessive pumping and shear effects from process tubing may be damaging to certain cell types. Since platelets are the most

vulnerable to shear induced damage, they would be a good beginning point for the investigation. Platelet lysis can be evaluated through the measurement of the release of lactic dehydrogenase and of lysosomal enzyme acid phosphatase. Platelet loss can also be evaluated by checking the mass balances for system process streams.

Cell viability studies may also reveal that the more vulnerable platelets are adversely affected while other cellular constituents are not. In this case it may be desirable to remove the platelets from the blood to be processed before regions of excessive shear rates are encountered. This is assuming that all or most of the platelets can be removed through a simpler process where shear effects are not excessive.

Other investigations which can be recommended include the investigation of the effects of using sedimenting agents, the use of human blood, and the use of animal models. Such studies will help evaluate potential designs and clarify problems associated with the actual clinical use of the proposed processes.

Further work should also be done on the refinement of theoretical models. As was discussed in the results section, empirical data can be used to help develop system design equations. Also, now that

many critical design parameters have been recognized further evaluation should be done on how these affect design models. Future efforts should also focus on the further development of multistage process models. Such processes may prove to be of utmost importance in separating cell types having differences in sedimentation characteristics that are miniscule.

Other work is recommended for the evaluation of process construction materials. Materials should be chosen which are biocompatible, disposable or autoclavable, sturdy, of low cost and yet are easy to work with from a manufacturing point of view.

APPENDIX A

DESCRIPTION OF POTENTIAL STAGEWISE PROCESS DESIGNS

Appendix A

I. Brief Description of Drawings for Stagewise Processes

Figure A1 is a schematic diagram of a series of centrifugal separating stages.

Figure A2 is a schematic diagram of a rectifying section of a centrifugal separating process.

Figure A3 is a schematic diagram of a stripping section of a centrifugal separating process.

Figure A4 is a schematic diagram of a fractionating process for centrifugal separations.

Figure A5 is a top view of a multistage centrifugal separating apparatus with a series of radial stages. The system can be adapted for use as any one of the process systems described by Figures A1-A4.

Figure A6 is a schematic diagram of the top view of a system of radial stages in series for a centrifugal separating process.

Figure A7 is a schematic diagram of the top view of a rectifying section using radial stages for a centrifugal separating process.

Figure A1. Separating Stages in Series. A series of stages may be used to separate blood components. "Heavier" or faster settling components are removed through the bottom of each sequential stage. "Light end" final product in stream N2 is rich in slower settling components in this case WBC's and platelets. Each "heavy end" stream is discarded or reinfused into the patient.

SEPARATING STAGES IN SERIES

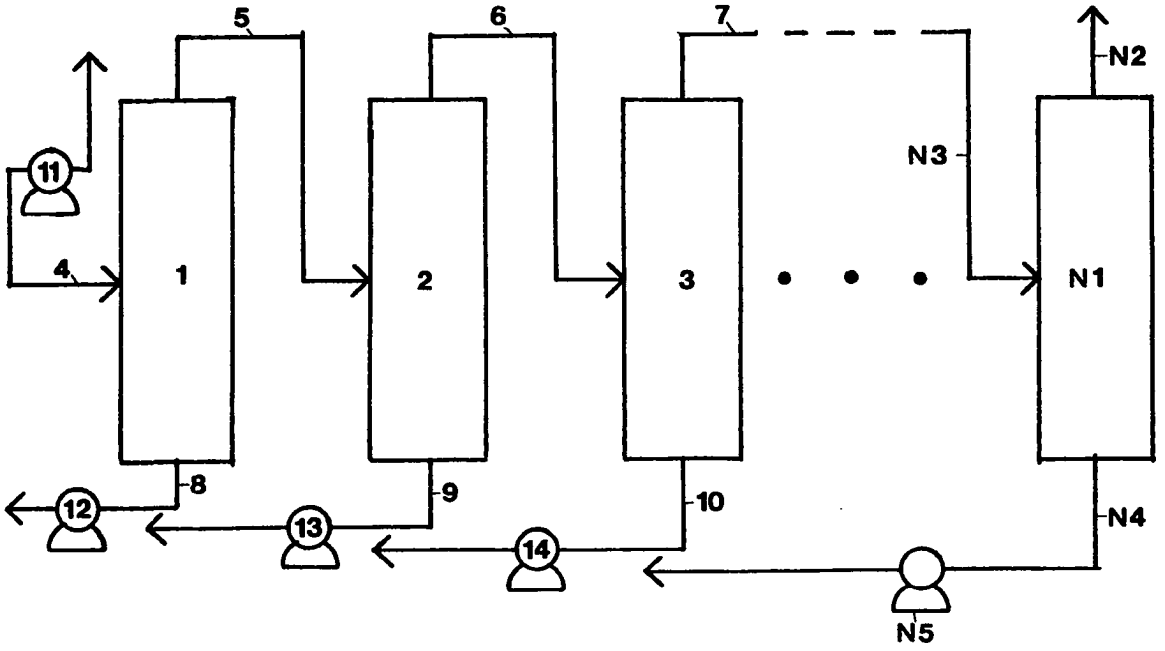

Figure A1

Figure A2. Rectifying Process for Blood Separations. In this process "heavy end" streams are routed to the previous stage in order to reduce the loss to the "heavy end" streams of slower settling WBC's and platelets. Feed stream enters and final "heavy end" stream exits at the same stage.

RECTIFYING SECTION

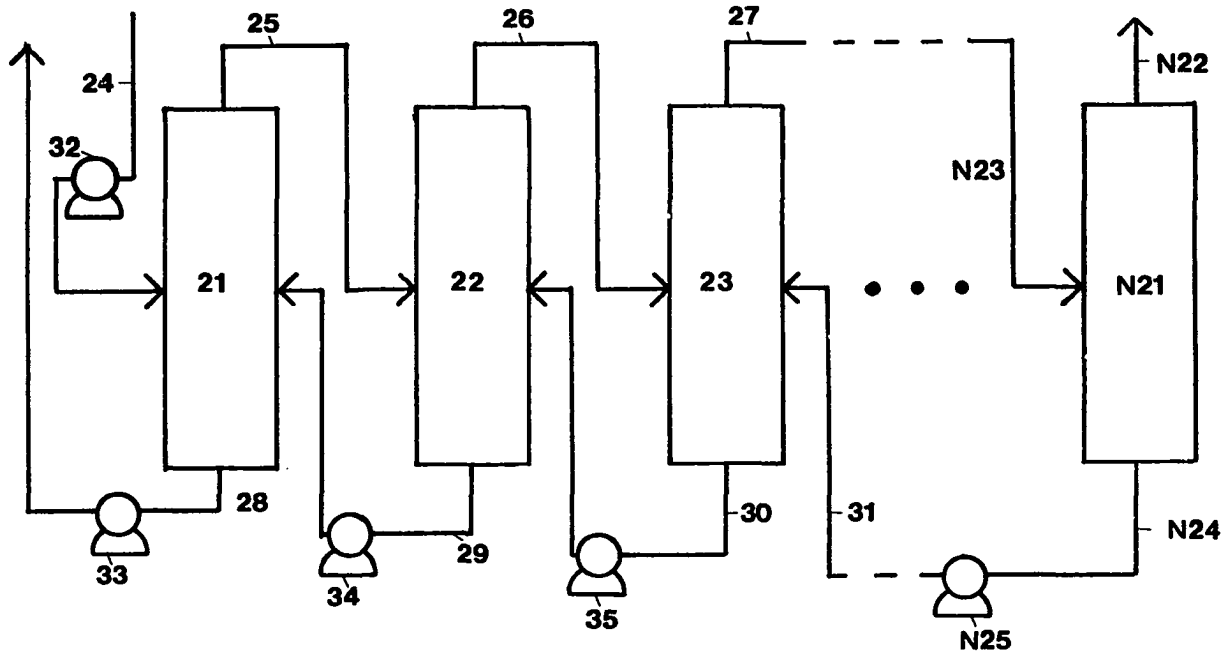

Figure A2

Figure A3. Stripping Process for Blood Separations. The stripping process is similar to the rectifying process in that "heavy end" streams are routed to successive stages. The processes differ in that final "light end" stream exits and feed stream enters at the same stage for the stripping process.

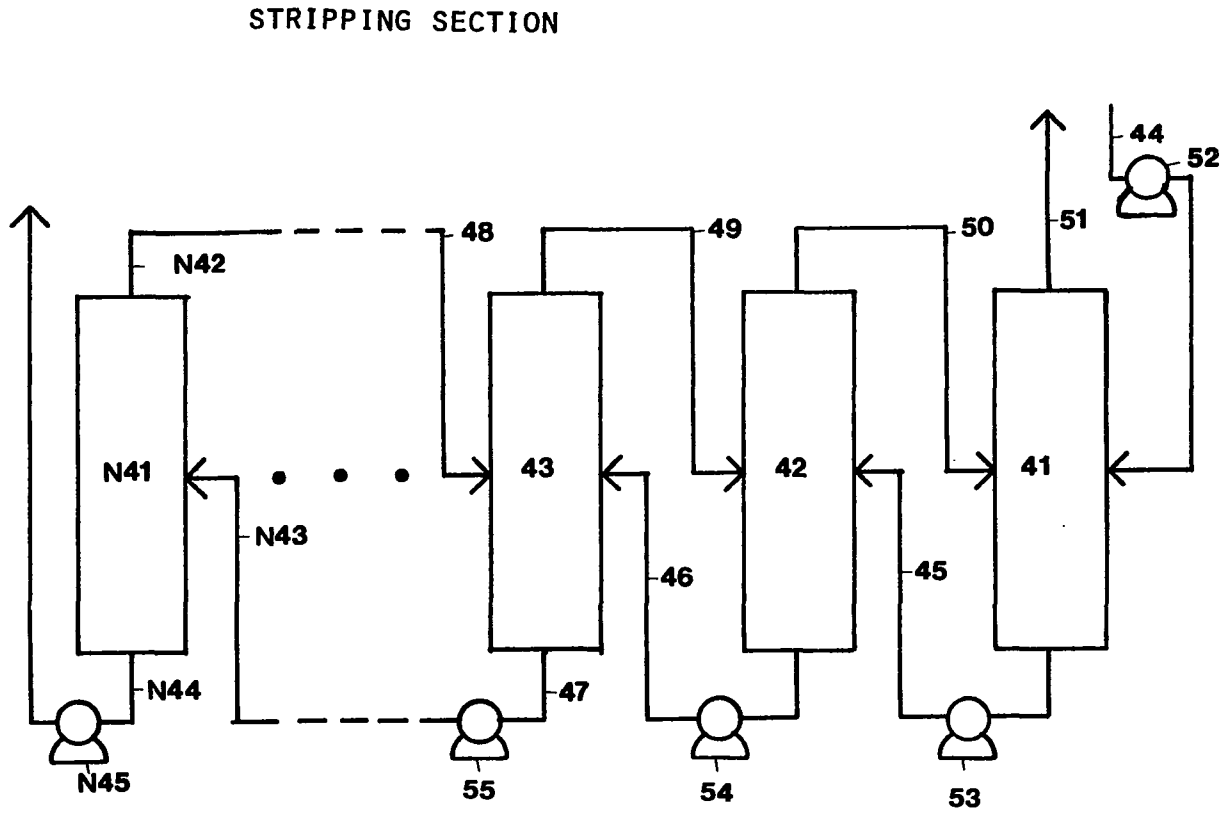
STRIPPING SECTION
N42
48
49
50
51
44
52
N41
43
42
41
N43
46
45
N44
47
N45
55
54
53

Figure A3

Figure A4. Fractionating Process for Blood Separations. The fractionating process combines the rectifying and stripping processes with the feed stream at an intermediate stage and exit "heavy" and "light end" streams at opposing ends.

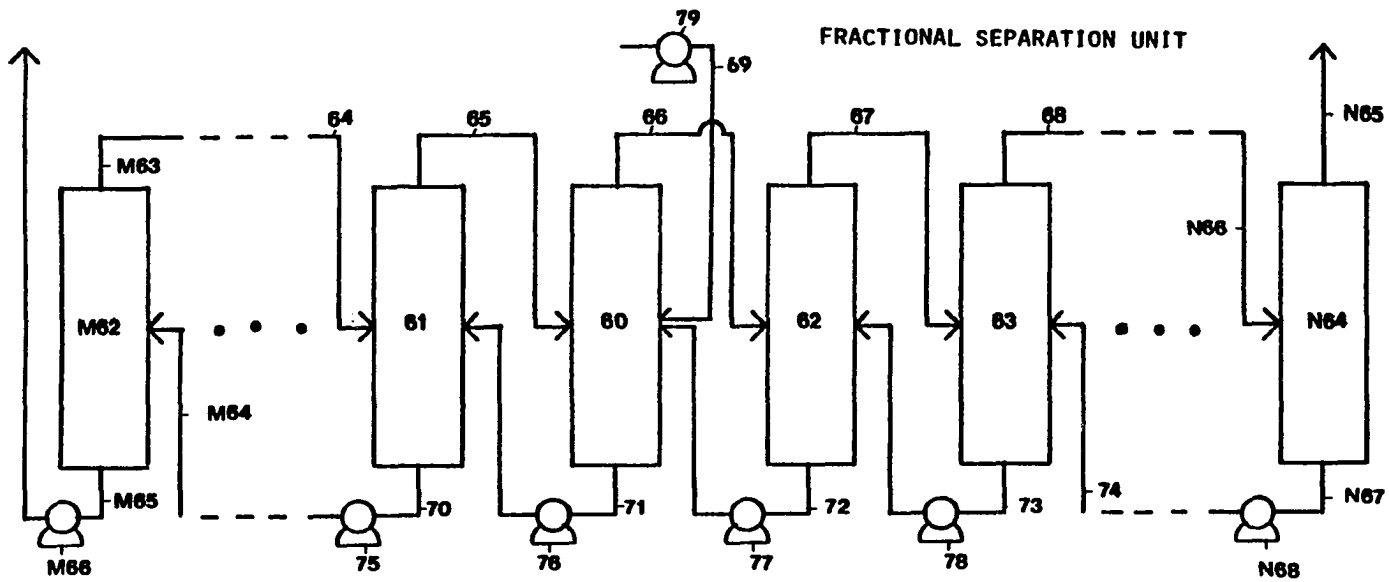
FRACTIONAL SEPARATION UNIT
79
69
64
65
66
67
68
N65
M63
N66
M62
61
60
62
63
N64
M64
M65
N67
74
70
71
72
73
M66
75
76
77
78
N68

Figure A4

Figure A5. Series of Radial Stages for Blood Separations. Any of the previous processes represented in the schematic illustrations in Figures A1 - A4 can be put on line with this series of cylindrical radial stages. The appropriate placement of interstage process lines appear in Figures A6 - A9 for the previous illustrations. Ports a and b are used for entrance of feed streams and/or "heavy" and "light end" process streams from other stages. Port c is used for the "light end" exit stream and port d for the "heavy end" exit stream.

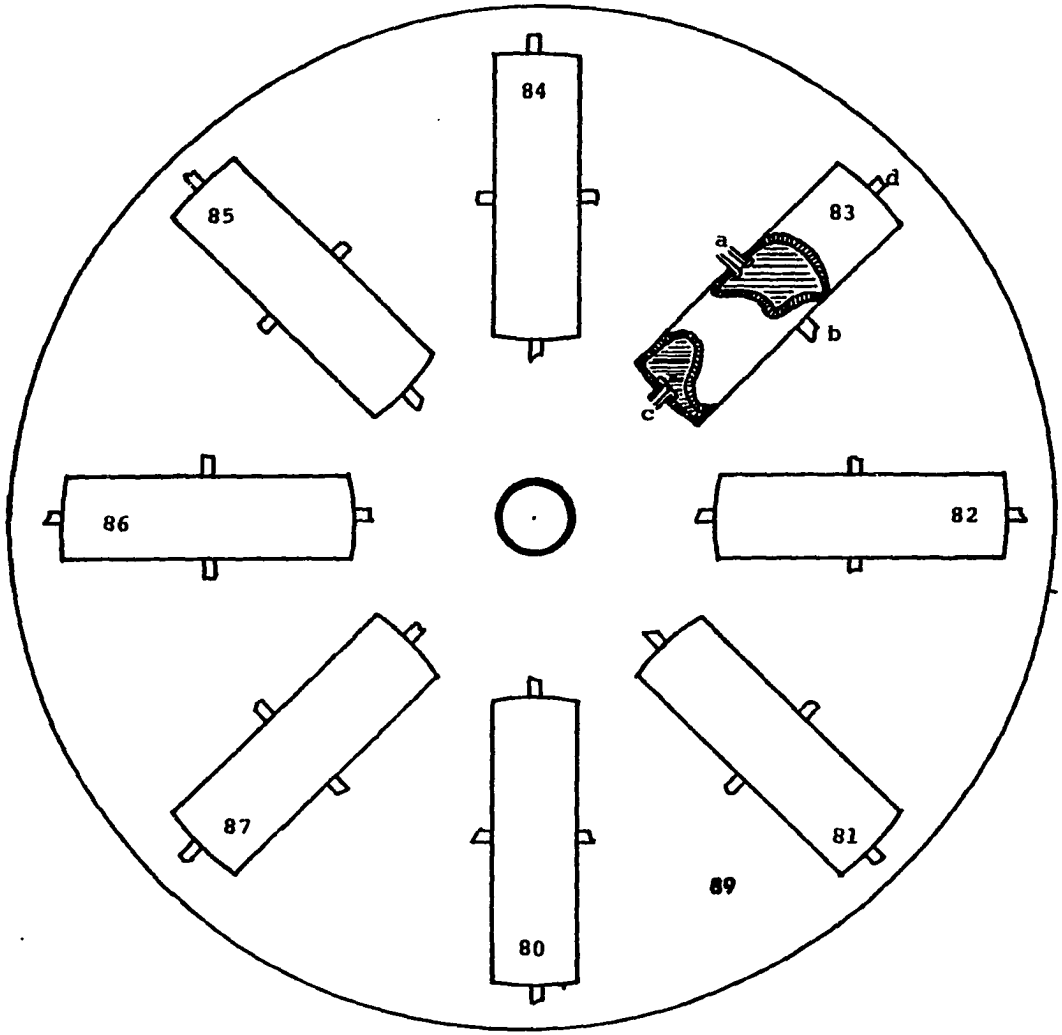

195

Figure A5

Figure A6. Flow Pattern for Radial Stage Design of Stages in Series. The process represented by the schematic illustration in Figure A1 is shown, adapted to a radial stage design.

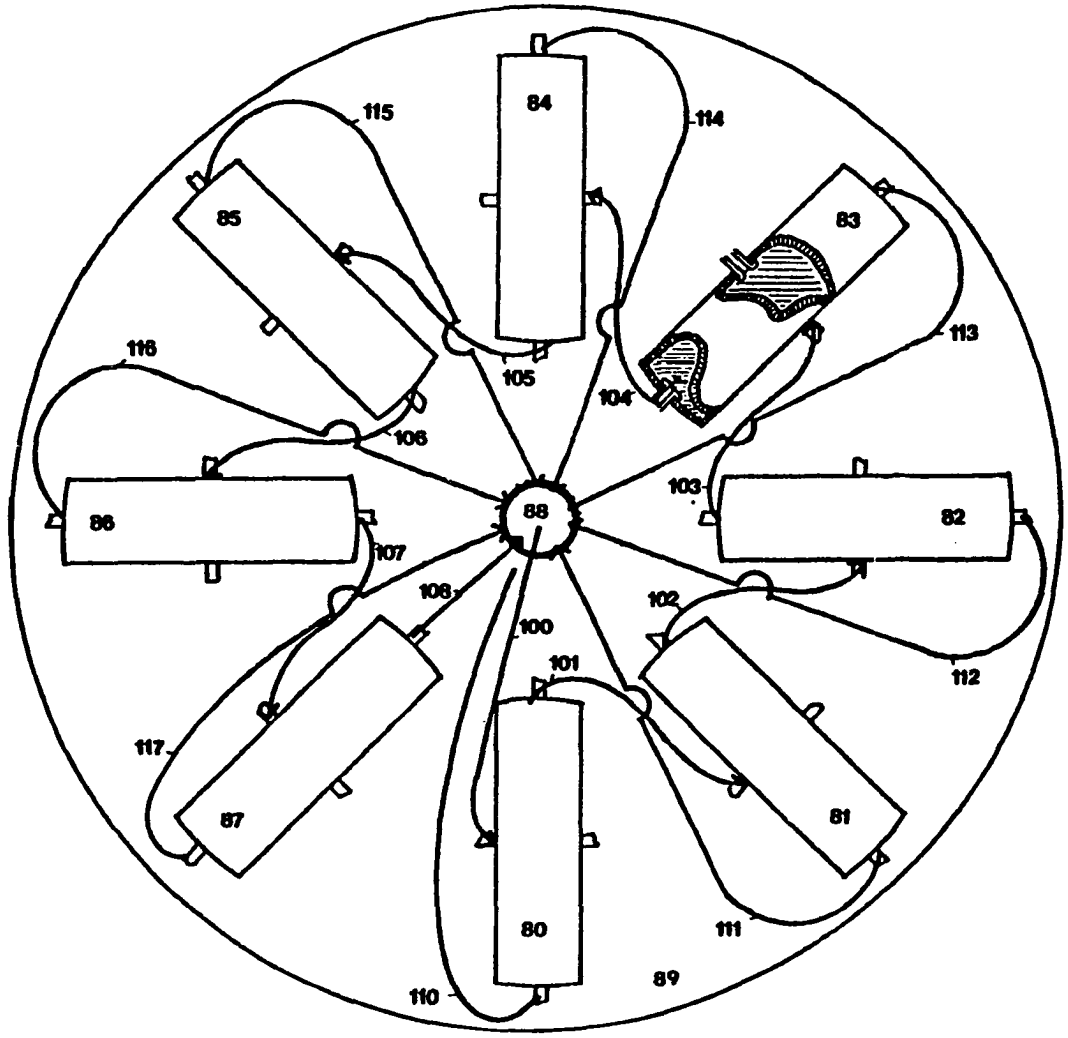
84
114
115
85
83
113
116
105
104
106
86
88
103
82
107
108
102
100
112
101
117
87
81
80
111
110
89

Figure A6

Figure A7. Flow Pattern for Radial Stage Design of a Rectifying Process. The process represented by the schematic illustration in Figure A2 is shown, adapted to a radial stage design.

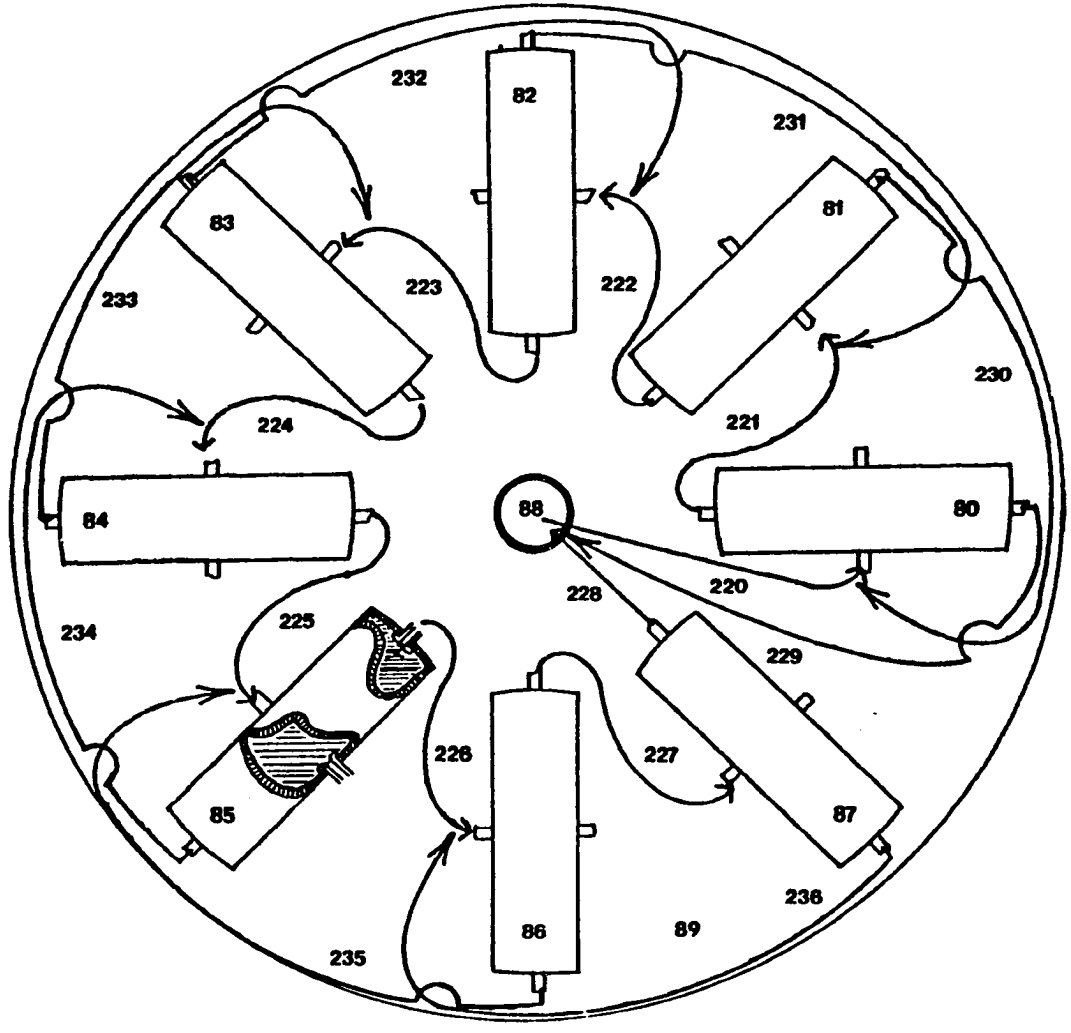
232
82
231
83
81
233
223
222
230
224
221
84
80
88
220
228
234
225
229
226
227
85
87
86
89
236
235

Figure A7

Figure A8 is a schematic diagram of the top view of a stripping section using radial stages for a centrifugal separating process.

Figure A9 is a schematic diagram of the top view of a fractionating centrifugal separator using radial stages.

Figure A10 is a top view of a concentric annular centrifugal separating apparatus which uses a set of stages in series.

Figure A11 is a perspective view of a multi-stage centrifugal separating apparatus with spiral shaped stages. The apparatus can be adapted for use with any one of the process systems described by Figures A1-A4.

Detailed Description of Process Designs

In referring to the drawings in greater detail Figures A1, A2, A3 and A4 illustrate a variety of process schemes for centrifugal separations. Centrifugal force is in the downward direction. Figure A1 illustrates the flow scheme for a series of stages. Feed stream 4 is pumped through pump 11 to Stage 1 of the process. "Light end" product stream 5 of Stage 1 flows by mass balance and becomes the feed for Stage 2. "Heavy

Figure A8. Flow Pattern for Radial Stage Design of a Stripping Process. The process represented by the schematic illustration in Figure A3 is shown, adapted to a radial stage design.

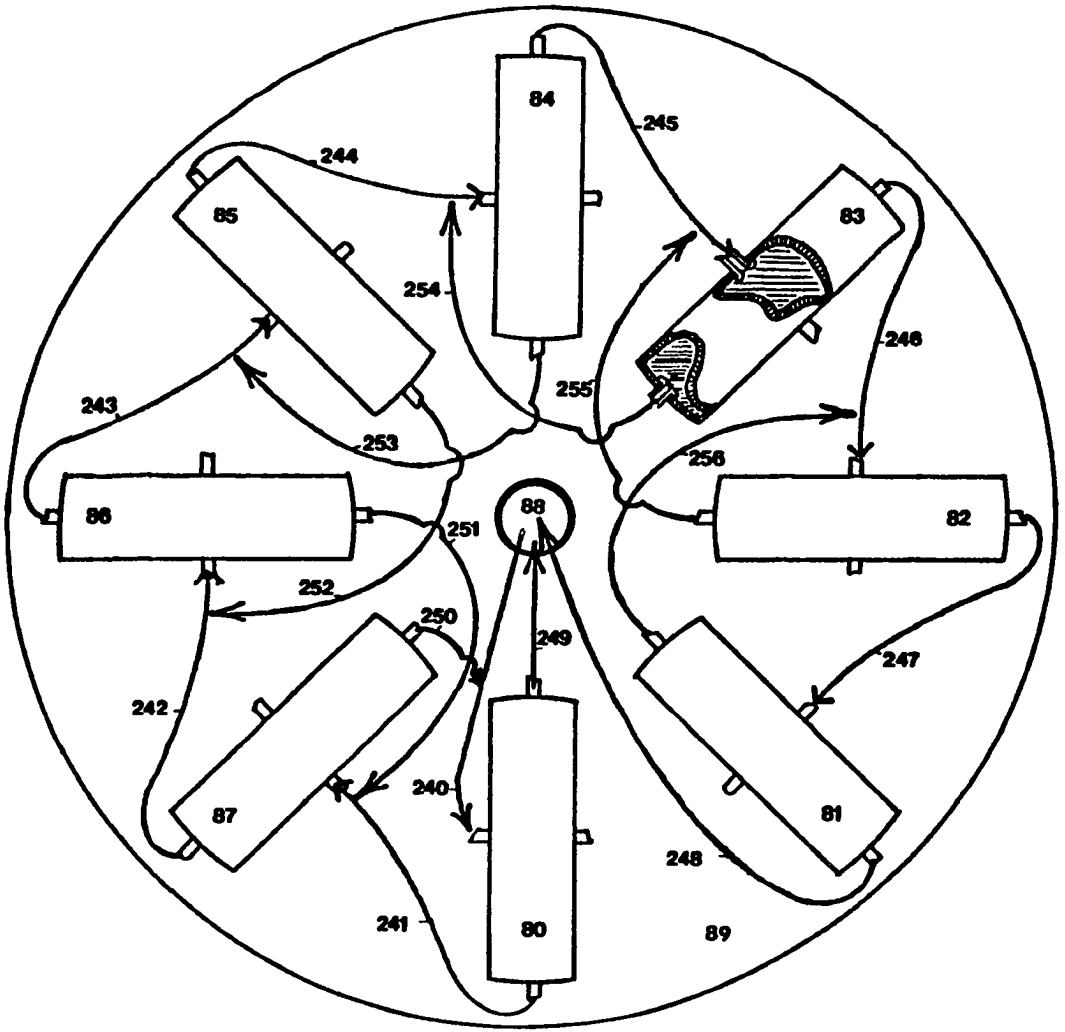
84
245
244
85
83
254
246
255
243
253
256
86
88
82
251
252
250
249
247
242
87
240
81
248
241
80
89

Figure A8

Figure A9. Flow Pattern for Radial Stage Design of a Fractionating Process. The process represented by the schematic illustration in Figure A4 is shown, adapted to a radial stage design.

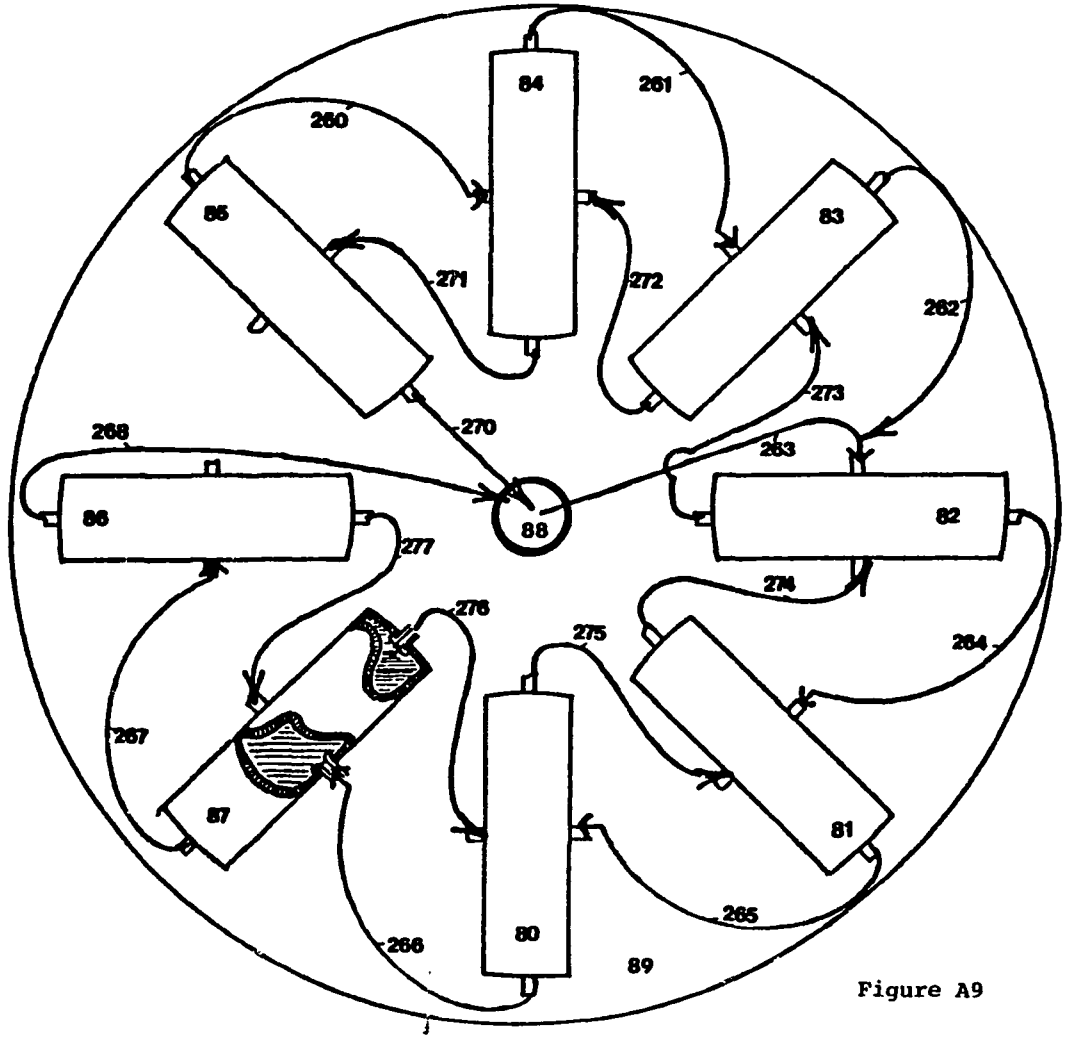
84
261
260
85
83
271
272
262
273
270
268
263
86
82
88
277
274
276
275
264
267
87
81
80
265
266
89

Figure A9

Figure A10. Concentric Annular Centrifugal Blood Separation Process. Concentric Annuluses are shown in an arrangement where they can be used as a series of stages. Blood fed to the center annulus travels circumferentially in a clockwise direction. The "light end" of the first annulus is routed to the second where the direction of flow is counter clockwise. This can be repeated for any number of stages. "Heavy end" streams are taken off at the end of each annulus.

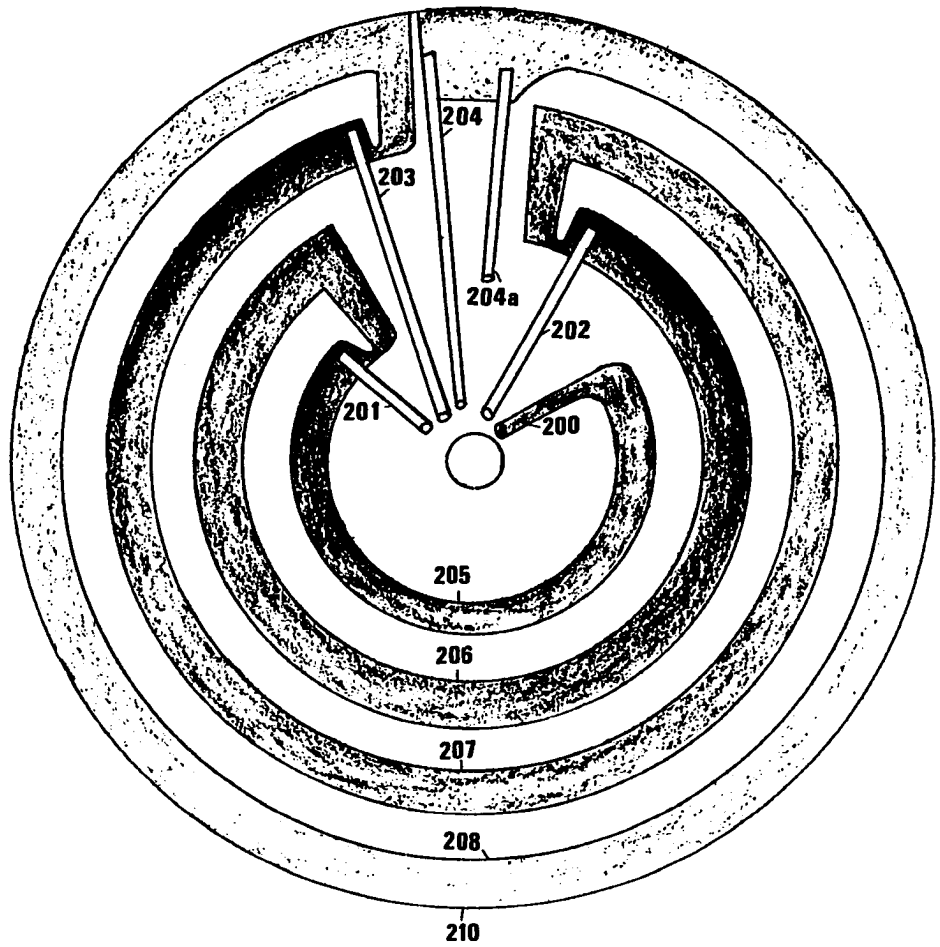

Figure A10

Figure A11. Stacked Spirals for Multistage Processing. This series of stacked spirals could be adapted to accommodate any of the processes represented in Figures A1 - A4. Ports 311-315 are used as feed streams entrances and/or as entrance ports for "heavy" and "light end" streams from other stages. Ports 331-335 are used for "light end" exit streams while ports 321-325 are used as "heavy end" exit streams.

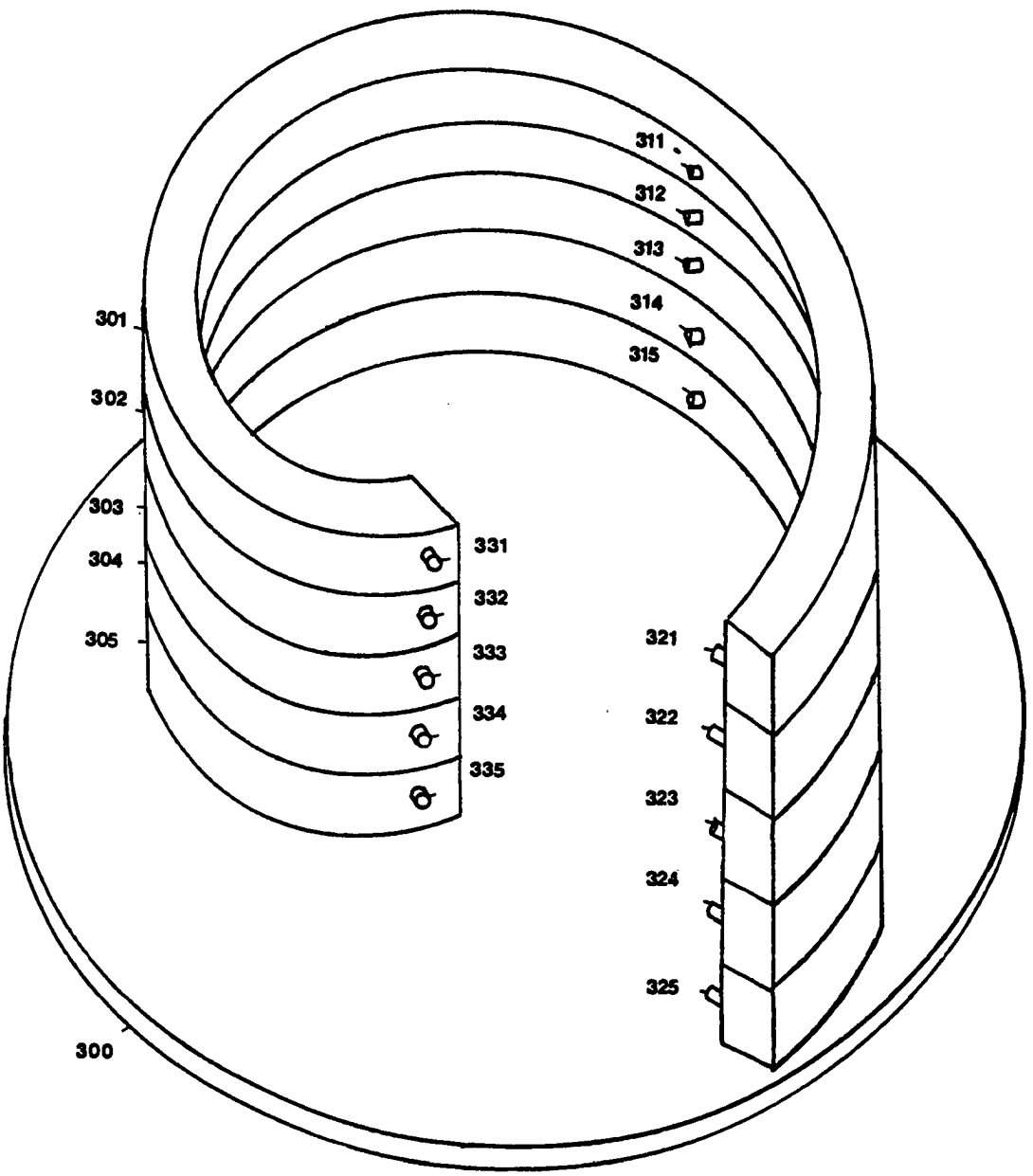
311
312
313
314
315
301
302
303
304
305
331
332
333
334
335
321
322
323
324
325
300

Figure A11

end" product stream 8 of Stage 1 is removed from the process scheme by peristaltic pump 12 and is collected. "Light end" product streams 6 through N3 become the feed streams for Stages 3 through N1 respectively. "Light end" product stream N2 of Stage N1 is removed from the process scheme as the overall "light end" product. Meanwhile "heavy end" streams are withdrawn from each successive Stage, 2 through N1, by peristaltic pumps 13 through N5.

Figure A6 is analogous to Figure A1 in that it represents radial Stages 80-87 in series on a circular plate 89. Feed stream 100 is pumped to Stage 80. Successive "light end" streams 101-107 are routed to the next stage in series, Stages 81-87 respectively, while the "light end" stream 108 from Stage 87 is removed from the process through the center hole 88. "Heavy end" streams 110-117 of each successive Stage 80-87 respectively are removed from the process through center hole 88 and are collected.

"Light end" streams 5-N2 for Figure A1 and 101-108 for Figure A6 will show decreasing concentrations of the heavier components (eg: RBC's) with each su cessive stage while maintaining fairly high numbers of lighter , slower sedimenting components (eg: WBC's and platelets)

for each successive stage. "Heavy end" streams 8-N4 and 110-117 will have a high concentration of faster sedimenting components (eg: RBC's), but low concentrations of the slower sedimenting or lighter components (eg: platelets and WBC's).

Figure A2 illustrates the flow scheme for a rectifying section for a centrifugal process, while Figure A7 illustrates the flow scheme for a rectifying section using radial stages.

In figure A2 the feed stream 24, perhaps consisting of whole blood, is fed to Stage 21 through peristaltic pump 32. "Light end" streams 25-N23 are fed to successive Stages 22-N21 and become less concentrated in heavier component (RBC's) as Stage N21 is approached and more concentrated in lighter components (platelets and WBC's). Stream N22 is the process "light end" product stream and has the lowest concentration of RBC's of all the "light end" streams. "Heavy end" process streams N24-29 are removed with peristaltic pumps N25-34 respectively and routed to Stages N21 through 21 respectively. "Heavy end" stream 28 is removed from the process by peristaltic pump 33. As the "heavy end" stream number decreases in value (i.e.: from N24 down to 28) the "heavy end" stream increases in concentration of

RBC's while decreasing in concentration of WBC's and platelets.

Figure A7 shows feed stream 220 flowing into Stage 80. "Light end" streams 221-227 are routed to successive Stages 81-87 respectively and proceeding counter-clockwise around the figure. "Light end" stream 228, having the lowest concentration of heavy components of any other "light end" stream is removed from the process through center hole 88. Proceeding clockwise around the figure, heavy end streams 236-230 flow from Stages 87-81 respectively to Stages 86-80 respectively. The "heavy end" stream 229 richest in the heavier component of all of the other "heavy end" streams is removed from the process through center hole 88 to be collected.

Figure A3 represents the flow scheme for a stripping section of a centrifugal process while Figure A8 illustrates the flow scheme for a stripping section on a circular plate 89 with radial cylindrical Stages 80-87.

In Figure A3 the feed stream 44 is pumped with peristaltic pump 52 to the feed Stage 41. "Heavy end" streams 45-N44 are removed from Stages 41-N41 by peristaltic pumps 53-N45. Streams 45 through N43 are routed to successive Stages 42-N41 respectively. The "heavy end" product N44 is richer in the heavier component than all of the other "heavy end" streams and is

removed from the process. "Light end" streams N42 through 50 are routed to Stages N21 through 21 respectively. "Light end" streams become richer in the lighter component as one goes from N42 to 51. Streams 51 and N44 are removed from the process to yield a "light end" product from stream 51 with a composition similar to that of the feed stream 44, and a "heavy end" product stream N44 very pure in the heavier component (eg.: RBC's).

In Figure A8 feed stream 240 is received into Stage 80. Proceeding counterclockwise, "light end" streams 256-250 are routed to successive Stages 82-80 respectively. Proceeding clockwise the "heavy end" streams 241 through 247 are routed to successive Stages 87 through 81, respectively. "Light end" product stream 249 from Stage 80 and "heavy end" product stream 248 from Stage 81 are removed from the process through center hole 88.

Figure A4 represents schematically a fractionating multistaged multicomponent centrifugal separator, while Figure A9 shows the same for radial stages 80-87 on a circular plate 89.

In Figure A4 the feed stream 69 is pumped through peristaltic pump 79 to feed Stage 60. "Light end" streams M63 through N66 are routed to Stages (M62+1) through N64. "Heavy end" streams N67 through M64

are pumped through peristaltic pumps N68 through (M66+1) to successive Stages (N64-1) through M62. Note that the fractionating separator consists of simply a stripping section, Figure A3, and a rectifying section, Figure A2, placed side by side with intercommunication between the two. The intercommunication is provided by mixing the "light end" product stream 65 from the stripping section with the "heavy end" product stream 72 from the rectifying section with the feed stream 69 at the feed stage 60. Note that the fractionating separator has the capability of producing a very pure "heavy end" product (RBC's for instance) in stream M65 while at the same time producing a "light end" product stream N65 which is practically void of the heavy component but rich in the lighter components (WBC's and platelets for instance). The "light end" product stream could then be routed to another fractionating separator for further separation of the "lighter components."

In Figure A9 feed stream 263 enters Stage 82. Proceeding counterclockwise "light end" streams 277-271 are routed to Stages 87-85 respectively. Proceeding clockwise "heavy end" streams 260-267 are routed to Stages 84-86 respectively. Product streams 270 ("light end" product, rich in "lighter components") and 268 ("heavy end" product, rich in "heavier component") are removed from the fractionation process through center

hole 88.

Figure A5 simply shows a multistaged centrifugal separation unit with cylindrical radial stages. Stage 83 shows a cut-away portion of a stage to reveal its cylindrical shape. Ports a and b are available as entrance ports for either feed blood, or the "heavy end" or "light end" streams from adjacent stages. Ports c and d are exit ports for "light end" and "heavy end" streams respectively. The schematic shows eight Stages 80-87 on plate 89 but could be modified to accommodate fewer or greater numbers of stages.

Figure A10 consists of four concentric annuluses, 205-208 on circular centrifuge head 210. The multi-staged process is actually a set of stages in series which was shown schematically in Figures A1 and A6. Feed blood enters through a process tube 200 into Stage 205. Flow proceeds in the counterclockwise direction with heavier components settling towards the outermost diameter of 205. The "heavier" or faster sedimenting components are then removed from Stage 205 by process tube 201. "Lighter" components remain nearer to the innermost diameter of annular space 205 and are routed to a second annulus 206 where flow proceeds in the counter-clockwise direction. This stage-to-stage process occurs successively for each stage with alternating clockwise-

counter-clockwise direction of flow until the last Stage 208 is reached. "Heavier" components are removed from Stages 205-208 by process tubes 201-204 respectively. Note that in the last Stage (208) all of the remaining blood components are removed by process tube 204. During the centrifugal operation of the annular device flow, conditions must be adjusted so that enough of the heavier component is removed by the time the last Stage (208) is reached. Carrier fluid (plasma) is removed through 204a.

Other annular designs could exist as well including stacked annuluses. Any of the process schemes illustrated in Figures A1-A4 can be applied to multistaged annular separators.

The perspective view of Figure A11 shows stacked spiral blood separating chambers 301-305 attached to a circular plate 300. Entrance ports 311-315 are positioned at an intermediate diameter of the spiral. The entrance ports are available for the process feed stream, or for the "heavy end" or "light end" streams from adjacent stages. Ports 331-335 at the innermost diameter of the spiral are available for "light end" exit streams while ports 321-325 at the outermost diameter of the spiral are available for "heavy end" exit streams. Note that any of the process streams illustrated in Figures A1-A4 can be applied for use with the multistaged spiral design.

APPENDIX B

NOMENCLATURE

APPENDIX B

a	major axis of oblate elipsoid
b	minor axis of oblate elipsoid
c	empirical coefficient for slope of fractional recovery curve fit
d	empirical coefficient for y-intercept of fractional recovery curve fit
C_f	volume fraction of suspending fluid
C_i	concentration of cellular species i
$C_{i,3}$	concentration of species i in Region 3
$C_{i,F}$	concentration of species i in feed stream
$C_{i,s}$	concentration of cellular component i within a stage
C_P	volume fraction of plasma
$C_{P,F}$	volume fraction of plasma in feed
C	concentration of red blood cells in sedimentation equations
C_{RBC}	concentration of red blood cells in suspension density equation
$C_{R,F}$	concentration of red blood cells in the feed stream
$C_{R,1}$	concentration of red blood cells in concentrated Region 1
f	frictional coefficient of blood cell
f_0	frictional coefficient for equivalent spherical volume
f_i	fractional amount of cellular species i crossing

	red cell-buffy coat interface or fractional amount of cellular species i exiting the "light end" of a blood separation chamber
f_p	fractional recovery of platelets out "light end" of blood chamber
$f_{p,A}$	adjusted platelet fractional recovery for case with an adjusted feed rate
f_r	fractional recovery of red cells out "light end" of blood chamber
f_w	fractional recovery of white blood cells out "light end" of blood chamber
$f_{w,A}$	adjusted white cell fractional recovery for case with an adjusted feed rate
F	feed stream volumetric flow rate per cross-sectional area
F_A	adjusted feed rate per cross sectional area to yield a Region 1 HCT of 80%
g(%LE)	function appropriate for the shape of experimental fractional recovery curve plotted against % flow out the "light end"
%LE	percent of feed exiting the "light end"
L	length of a blood chamber
HCT	hematocrit (red blood cell concentration)
MRL	mean rouleau length
RBC	red blood cell
rpm	revolutions per minute
WBC	White blood cell
A,B,C,D,E,F,G,H	various recycle process streams
R_i	red cell concentration for a particular recycle process stream subscripted with i=A,B,C,D,E,F, G or H

Q_i	flow rate for a particular recycle process stream subscripted with i=A,B,C,D,E,F,G or H
W_i	white cell concentration for a particular recycle process stream subscripted with i=A,B,C,D,E,F,G or H
R	recycle rate
V	volume of blood chamber
Q	feed flow rate to a blood chamber
r	particle radius
r_r	radius of red cell
r_{eq}	equivalent radius for a sphere having a volume equal to that of a rouleau aggregate
r_o	radius of a cylindrical blood chamber
r_c	radial distance from axis of rotation
r^2	square of correlation coefficient for curve fit of fractional recovery data
S_o	sedimentation coefficient
S_i	Stokes' sedimentation coefficient for cellular species i
S_R	sedimentation coefficient for a red blood cell
S_E	Einstein sedimentation velocity
S_t	Stokes' terminal settling velocity
V_p	superficial velocity in a blood chamber for plasma
V_c	Blood chamber volume
V_{le}	"light end" superficial velocity
$V_{p,3}$	Plasma superficial velocity in Region 3
$\tilde{V}_i$	Sedimentation velocity for cellular species i
$\tilde{V}_P$	Sedimentation velocity of platelet
$\tilde{V}_R$	Sedimentation velocity of red blood cell
$\tilde{V}_W$	Sedimentation velocity of white blood cell

$\tilde{V}_{i,3}$ sedimentation velocity of species i in Region 3

$\tilde{V}_{R,3}$ red cell sedimentation velocity in Region 3

V_r volume of rouleau aggregate

t thickness of red cell

α constant in Einstein's formula for sedimentation velocity

ε efficiency of a process for white cell collection based on f_w

$\varepsilon_{S.S.}(\%)$ percent efficiency for single stage analysis

$(\varepsilon_R)_{th}$ theoretical percent efficiency for recycle process

$\varepsilon_R(\%)$ experimental percent efficiency for recycle process

γ shear rate

ρ_f density of suspending fluid

ρ_i density of blood cellular component i

ρ_p density of plasma

ρ_r density of red cell

ρ_{RBC} density of a red blood cell in suspension density equation

ρ_{susp} suspension density

θ friction ratio

μ viscosity of suspending fluid

ω angular velocity of centrifuge head

BIBLIOGRAPHY

1. Goldman, J.M., "Blood Cell Separations," IBM Medical Review, Gros Monti Limited, England (1978).

2. Gilcher, R.O., Personal Correspondence, Oklahoma Blood Institute, Oklahoma City, Oklahoma 1980.

3. Propper, R.D. and Marino, S.K., "Neocytes and Neocyte-Gerocyte Exchange Transfusions," (Abstract), Invited paper: First Annual Apheresis Symposium; Current Concepts and Trends, Chicago, IL (1979).

4. Klein, Harvey, "Neocyte Separation and Early Clinical Trials," (Abstract), Invited paper: First Annual Apheresis Symposium; Current Concepts and Trends, Chicago, IL (1979).

5. Chmiel, H., Personal Communication, at Gemeinschaftsfachausschuss Biomedizinische Verfahrenstechnik, Stuttgart, Germany, 1978.

6. Greenwalt, T.J. and Perry S., "Preservation and Utilization of Components of Human Blood," Progress in Hematology, VI, E.B. Brown and C.B. Moore (eds.), New York, Grune and Sutton, 1969, p. 148.

7. Miller, M.V., Wilson, M.J., and Kolb, H.J., "Simple Methods for Production of HL-A Antigen Poor Red Cells," Transfusion 13: 189, 1973.

8. Polesky, H.F., McCullough, J., et al., "Evaluation of Methods for the Preparation of HL-A Antigen Poor Blood," Transfusion 13: 383, 1973.

9. Blood Component Therapy, 2nd ed., American Association of Blood Banks, Washington, D.C., 1975.

10. Hersh, E.M., Bodey, G.P., et al., "Causes of Death in Acute Leukemia. A Ten Year Study of 414 Patients from 1954-1963," JAMA 193: 105, 1965.

11. Cheng, H., Rodriguez, V., et al., "Causes of Death in Adults with Leukemia," Medicine (Baltimore) 55: 259, 1976.

12. Russell, J.A., Powles, R.L., "A Practical Guide to Granulocyte Transfusion Therapy," J. of Clin. Path. 29: 369, 1976.

13. Ingaki, J., Rodriguez, V., Bodey, G.P., "Causes of Death in Cancer Patients," Cancer 33: 568, 1976.

14. Bodey, G.P., Buckley, M., et al., "Quantitative Relationship Between Circulating Leukocytes and Infection in Patients with Acute Leukemia," Ann. Intern. Med. 64: 289, 1975.

15. Lyon, B., "The New Phlebotomists," Oakridge National Laboratory Review, Summer 1977, pp. 35-40.

16. McCabe, W.R., "Gram-Negative Bacteremia," Advanced Internal Medicine 19, 1974.

17. Seto, F., Study Topics and Lecture Supplements for Hematology, University of Oklahoma, Zoology Department, 1978.

18. Boggs, D.R., "Transfusion of Neutrophils as Prevention or Treatment of Infection in Patients with Neutropenia," New Engl. J. Med., 290, 1974, 1055-1062.

19. Schiffer, C.A., Bushholz, D.M., et al., "Clinical Experience with Transfusion of Granulocytes Obtained by Continuous-Flow Filtration Leukapheresis," Am. J. Med., 58: 371-381, 1975.

20. Eyrie, H.J., Goldstein, I.M., et al., "Leukocyte Transfusions: Function of Transfused Granulocytes from Donors with Chronic Myelocytic Leukemia," Blood, 36, 1970, 432-442.

21. Goldstein, I.M., Eyrie, H.J., et al., "Leukocyte Transfusions: Role of Leukocyte Alloantibodies in Determining Transfusion Response," Transfusion, 11, 1971, 19-24.

22. Steigbigel, R.T., Baum, J., et al., "Granulocyte Bactericidal Capacity and Chemotaxis as Affected by Continuous-Flow Centrifugation and Filtration Leukapheresis, Steroid Administration, and Storage," Blood 52, No. 1, 1978, 197.

23. Winton, E.F., Vogler, W.R., "Development of a Practical Oral Dexamethasone Premedication Schedule Leading to Improved Granulocyte Yields with the Continuous-Flow Centrifugal Blood Cell Separator," Blood 52, No. 1, 249, 1978.

24. Lionetti, F.J., Hunt, S.M., Lin, P.S., Kurtz, S.R., Valeri, C.R., Preservation of Human Granulocytes II. Characteristics of Granulocytes Obtained by Counter-flow Centrifugation," Transfusion 17, No. 5, 1977, 465.

25. Aisner, J., Schiffer, C.A., and Wiernik, P.H., "Granulocyte Transfusion Evaluation of Factors Influencing Results and a Comparison of Filtration and Intermittant Centrifugation Leukapheresis," Brit J. of Haem, 38: 121, 1978.

26. Lowenthal, R.M. and Park, D.S., "The Use of Dextran as an Adjunct to Granulocyte Collection with the Continuous Flow Blood Cell Separator," Transfusion 15, 1975, 23-27.

27. Mischler, J.M., Higby, D.J., Rhomberg, W., et al., "Hydroxyethyl Starch and Dexamethasone as an Adjunct to Leukocyte Separation with the IBM Blood Cell Separator," Transfusion 14: 352, 1974.

28. Herzig, G.P., Root, R.K., and Graw, R.G., "Granulocyte Collection by Continuous-Flow Filtration Leukapheresis," Blood 39: 554-567, 1972.

29. Huestis, D.W., Price, M.F., et al., "Granulocyte Collection with the Haemonetics Blood Cell Separator," Leukocytes: Separation, Collection and Transfusion, J.M. Goldman and R.M. Lowenthal (eds.), Academic Press, New York, 1975, pp. 205-219.

30. Sussman, L.N. and Colli, W., "Harvesting of Granulocytes Using a Hydroxyethyl Starch Solution," Leukocytes: Separation, Collection and Transfusion, J.M. Goldman and R.M. Lowenthal (eds.), Academic Press, New York, 1975, pp. 220-226.

31. McCredie, K.R., Hester, J.P., et al., "Clinical Results of Granulocyte Infusion Using Normal Donors," Leukocytes: Separation, Collection and Transfusion, J.M. Goldman and R.M. Lowenthal, Academic Press, New York, 1975, pp. 287-291.

32. Benbunan, M., Bussel, A., et al., "Collection by Blood Cell Separator and In-Vitro Function of Normal Granulocytes," Leukocytes: Separation, Collection and Transfusion, J.M. Goldman and R.M. Lowenthal (eds.), Academic Press, New York, 1975, pp. 81-87.

33. Hammerschmidt, D.E., Craddock, P.R., McCullough, J., et al., "Complement Activation and Pulmonary Leukostasis During Nylon Fiber Filtration Leukopheresis," Blood 51, No. 4, 721, 1978.

34. Nusbacher, J., Rosenfeld, S.I., et al., "Nylon Fiber Leukapheresis: Associated Complement Component Changes and Granulocytopenia," Blood 51, No. 2, 1978, 359.

35. IBM Medical Review, 1978, Gros Monti Limited, England, p. 8.

36. Agranoff, B.W., Vallee, B.L., Waugh, D.F., "Centrifugal Subfractionation of Polymorphonuclear Leukocytes, Lymphocytes and Erythrocytes," Blood 9, 804, 1954.

37. Böyum, A., "A One-Stage Procedure for Isolation of Granulocytes and Lymphocytes from Human Blood," Scand. J. Clin. Lab. Invest. 21 (1968) Suppl., 97, 1968.

38. Loos, M., Blok-Schut, B., van Doorn, R., Hoksbergen, R., de la Riviére, A.B., and Meerhof, L., "A Method for the Recognition and Separation of Human Blood Monocytes on Density Gradients," Blood, Vol. 48, No. 5, 1976.

39. Schmidt, G., Gross, J., Grauel, E.L., Ihle, W. and Syllm-Rapoport, I., Separation and Characterization of Red Blood Cells from Newborns and Infants During the First Trimenon of Life by Means of a Dextran Density Gradient," Biol. Neonate 31: 42-50 (1977).

40. Pharmacia Fine Chemicals Bulletin, Ficoll-Paque™ For In-Vitro Isolation of Lymphocytes, Sweden, 1975.

41. Pharmacia Fine Chemicals Brochure, Ficoll-Paque™ For In-Vitro Isolation of Lymphocytes, Rahms i Lund, Sweden, November 1975.

42. Brutel Dela Riviére, A., Verhoef-Karssen, P.R., De Wit, J.J.F.M., Loos, J.A., and Prins, H.K., "Large Scale Preparation of Leukocyte Concentrates and Further Purification of Lymphocytes and Granulocytes with the IBM 2991 Cell Processor," Transfusion 17 (5): 509, 1977.

43. Pharmacia Fine Chemicals Brochure, Percoll® For Density Gradient Centrifugation, Västra Aros Trykeri, Sweden, 1979.

44. Avoy, D.R., Blood: The River of Life, The American National Red Cross, 1976, pp. 54-58.

45. Leavell, B.S. and Thorup, O.A., Fundamentals of Hematology. 4th ed., W.B. Saunders Company, New York, 1976, p. 721.

46. Buchholz, D.H., "Platelet Pheresis with the Fenwal CS-3000 Blood Cell Separator," (Abstract), Invited Paper: First Annual Apheresis Symposium: Current Concepts and Trends, Chicago, IL (1979).

47. Kingsley, G.F., Personal Correspondence, Workshop on Therapeutic Plasma and Cytapheresis, Rochester, Minnesota (1979).

48. White, G.L., Personal Correspondence, Animal Research Facility, Veteran's Hospital, Oklahoma City, 1978.

49. Diggs, L.W., Sturm, D. and Bell, A., The Morphology of Human Blood Cells, Abbott Laboratories, North Chicago (1975).

50. Rand, P.W., Lacombe, E., H.E., and Austin, W.H., "Viscosity of Normal Human Blood Under Normothermic and Hypothermic Conditions," J. of Applied Physiology 19: (1), p. 117, 1964.

51. Streeter, V.L. and Wylie, E.B., Fluid Mechanics, 6th ed., McGraw-Hill Book Company, New York, 1975, pp. 284-5.

52. Centrifugal Separation: A Science and an Art, The DeLavel Separator Company, 1978, p. 8.

53. Kolobow, T., Laboratory of Technical Development, National Heart, Blood and Lung Institute, Bethesda, Maryland, Personal Correspondence, (1978-1981).

54. Ito, Y., Laboratory of Technical Development, National Heart, Blood and Lung Institute, Bethesda, Maryland, Personal Correspondence (1978-1981).

55. Kingsley, G.F. and Schoendorfer, D., Ph.D., Haemonetics Corporation, Braintree, Maryland, Personal Correspondence, 1981.

56. Petrella, E., Dideco S.P.A., Mirandola, Italy, Personal Correspondence, 1980.

57. Konstantine, P., Gambro American Membrane Division, Covina, CA, Personal Correspondence, 1981.

58. Buecheuger, Ron and Brown, Richard, Fenwal Laboratories, Division of Travenol Laboratories, Inc., Deerfield, IL, Personal Correspondence, 1981.

59. Suaudeau, J., Kolobow, T., Ito, L., et al., "The Ito 'Flow-Through' Centrifuge: A New Device for Long-Term (24 Hour) Plasmapheresis Without Platelet Deterioration," Transfusion 18: No. 3, 312 (1978).

60. Ito, Y., Suaudeau, J., and Bowman, R.L., "New Flow-Through Centrifuge Without Roating Seals Applied to Plasmapheresis," Science 189: 999-1000 (1977).

61. Davidson, J.H., "A Continuous Flow Separator for Use in Immunodepletion: Theory, Design and Experimental Observations," A thesis presented for the Master of Science degree at the University of Tennessee, Knoxville, December 1976.

62. Sartory, W.K., et al., Centrifuge Apparatus, U.S. Patent No. 3,957,197 (1976).

63. Centrifugal Separation: A Science and an Art, The DeLavel Separator Company, 1978, p. 8.

64. Loyd, P.J. "Centrifugation," Theory and Practice of Solid-Liquid Separation, Frank M. Tiller, (ed.), Chem. Engr. Dept., University of Houston, 1975, pp. 409-417.

65. Herzog, R.O., Illig, R., and Kudar, H., Z. Phys. Chem. A167, 329, 1934.

66. Perrin, F., J. Phys. Radium, [7], 7, 1, 1936.

67. Zwiker, J.D., Powder Technology 6: 33, 1972.

68. Maupin, B., Blood Platelets in Man and Animals, Vol. 1, Oxford: Pergamon Press, 1969.

69. Tullis, J.L., Blood 7: 891, 1952.

70. Briellatt, J.P., Remenyik, C. and Sartory, W.K., Blood Cell Separator Development for In-Vivo Leukapheresis: A Critical Analysis, Oakridge National Laboratory Contract No. W-7405-eng-26, Oakridge, Tennessee, 1972.

71. Vand, V.J., J. Phys. Colloid. Chem. 52: 277, 1948.

72. Ponder, E., Hemolysis and Related Phenomena, New York: Grune and Stratton, Inc., 1948.

73. Hawksley, P.E.W., Some Aspects of Fluid Flow, Paper No. 7, London: Edward Arnold & Co., 1951.

74. Ponder, E., "Red Cell Structure and Its Breakdown," Protoplasmatologia, Vol. 2 (Vienna: Springer-Verlag 1955), pp. 1-123.

75. Maupin, B., Blood Platelets in Man and Animals, Vol. 1, Oxford, Pergamon Press, 1969.

76. Wintrobe, M.M., Clinical Hematology, 6th ed., Philadelphia, Lea and Ferbinger, 1967.

77. Woltjes, J., ten Duis, H.J., et al., A Simple Technique to Quantify Leukocyte Phagocytic Capacity in Extracorporeal Circuits (ECC), Abstract of paper presented at the Symposium for Artificial Organs.

78. Sartory, W.K., "Centrifugal Particle Elutriator and Method of Use," United States Patent No. 3,825,175, 1974.

79. Miller, R.G. and Phillips, R.A., J. Cel. Physiol. 73:191, 1969.

80. Sartory, W.K., Centrifugal Particle Elutriator and Method of Use, U.S. Patent No. 3,825,175 (1974).

81. Kernick, D., Jay, A.W.L., Rowlands, S. and Skibo, L., "Experiments on Rouleau Formation," Can. J. Physiol. Pharmacol. 51, 690-699, 1973.

82. Ponder, E., "On Sedimentation and Rouleau Formation," Q.J. Exp. Physiol. 16, 173-194, 1927.

83. Goldsmith, H.L., "Microscopic Flow Properties of Red Cells," Fed. Proc. 26 (6), 1813-1820, 1967.

84. Bessis, M., Cytology of the Blood and Bloodforming Organs, Grune and Stratton, New York, 1956.

85. Adams, D.A., U.S. Patent 3,586,413, 1971.

86. Holland, C.D., Multicomponent Distillation, Prentice-Hall, Inc., Englewood Cliffs, N.J. (1963).