This dissertation has been
microfilmed exactly as received

67-14,141

SCHUMACHER, Bill G., 1929-
AN EDP APPROACH IN PUBLIC ADMINISTRATION.

The University of Oklahoma, Ph.D., 1967
Political Science, public administration

University Microfilms, Inc., Ann Arbor, Michigan

Downloaded from SHAREOK. Persistent Handle URL: https://hdl.handle.net/11244/2234

THE UNIVERSITY OF OKLAHOMA

GRADUATE COLLEGE

AN EDP APPROACH IN PUBLIC ADMINISTRATION

A DISSERTATION

SUBMITTED TO THE GRADUATE FACULTY

in partial fulfillment of the requirements for the

degree of

DOCTOR OF PHILOSOPHY

BY

BILL G. SCHUMACHER

Norman, Oklahoma

1966

AN EDP APPROACH IN PUBLIC ADMINISTRATION

APPROVED BY

Walter F. Schyfer

Rufus G. Hall

Russell D. Buhite

Oliver Benson

John Paul Duncan

DISSERTATION COMMITTEE

TABLE OF CONTENTS

Page

INTRODUCTION v

Chapter

I. THE RELATIONSHIP OF COMPUTERS AND PUBLIC ADMINISTRATION 1

The Evolution of Public Administration
Questionable Ideas about Computers
Evolutionary Stages of Present Application
Summary

II. AN ELECTRONIC DATA PROCESSING SYSTEM 11

Basic Terminology
Hardware
Software
System Development
Summary

III. AUTOMATION AND ADMINISTRATION 25

Control
Planning
Execution
Evaluation
The Automated Administration
Summary

IV. AUTOMATION AND ORGANIZATION 39

The Automated Organization
Desirable Systems Characteristics
Research and Development
Summary

V. AUTOMATION PUBLIC ADMINISTRATION 65

Inter-disciplinary Applications
Intra-disciplinary Applications

Chapter Page

Professional Specialties
International Systems
Summary

VI. AUTOMATION IN FEDERAL ADMINISTRATION 79

The Executive Branch
The Legislative Branch
The Judicial Branch
Summary

VII. AUTOMATION IN STATE AND LOCAL ADMINISTRATION. 101

Federal Applications
State Applications
Local Applications
Summary

VIII. CONCLUSION 125

Hardware
Software

APPENDICES 129

A Glossary of Computer Terms
Systems Control All Tasks
Project Spur 1965

BIBLIOGRAPHY 250

INTRODUCTION

This is an account of a new body of knowledge in the field of public administration and automation. The relationship of computers and public administration is presented as part of the historic evolution of public administration and particularly as a part of the scientific management phase. Certain ideas about computers are questioned, and present evolutionary stages of computer uses in public service are presented.

The electronic data processing system is defined in man/machine terms. The machine environment is functionally described by the hardware classification of input, processing, and output. The software elements of languages and programs are explained, and the present techniques of system development are presented and criticized. The purpose is to present the EDP environment without the usual associated mystery.

While computers have an influence upon normative and behavioral aspects of the administration of the public programs, the most direct and potentially significant results relate to the execution or operation of public systems. In almost every governmental program, automation can probably perform the present manual duties of the administrator and

his staff. Automated control devices are explained as the first step to total system development. Also, automation of an entire organization as well as a method of continual improvement of the system is described. Usually, the fully automated organization will be impossible to achieve, but it represents an organizational goal.

A brief description of the present state of computer techniques in political science is presented, along with types of applications in Federal, state, and local government.

Finally, a prospectus of organizational needs and directions is proposed, to improve the knowledge level and use of computers in public administration for the immediate future.

Common terminology usage is followed. For example, the words "data" and "information" which have different definitions are currently being used interchangeably. Computers are referred to anthropomorphically in most literature. Both of these practices are followed in this presentation.

The appendix includes explanatory and technical material. The latter information is composed mainly of applied research-and-development reports of Project SPUR, Department of Housing and Urban Development, Region V. These case studies are operational evidence of the validity of administrative cybernetics and the total-automation concept.

This material, as is customary, cannot be used without the permission of the author. In addition, the permission of the Regional Administrator, United States Department of Housing and Urban Development, Region V, Fort Worth, Texas must also be obtained since confidential agency information is included.

AN EDP APPROACH IN PUBLIC ADMINISTRATION

CHAPTER I

THE RELATIONSHIP OF COMPUTERS AND PUBLIC ADMINISTRATION

The importance of automation in governmental operations is evidenced by the amount of expenditure for this purpose by the Federal government alone. During fiscal year 1964 the United States government spent approximately $1.1 billion on computer technology.[1]

A computer is a device that can receive, process, and produce information according to plan. While the contribution of this equipment is generally acknowledged, its relationship to the field of public administration has not been clearly drawn. Historically, automation is a continuum of the evolution of public service. The placing of administrative automation in its historic perspective, the questioning of certain ideas about computers, and the tracing of evolutionary stages of present applications can contribute to a better understanding of this relationship. A brief examination of the historical development of public

---

[1]U. S., General Services Administration, The Government-Wide ADP Sharing Exchange Program, April, 1965, p. 2.

administration in the United States will serve to place this recent development in perspective.

The Evolution of Public Administration

Administrative history may be divided into the Federalist, the Democratic, the Moral Reform, and the Scientific Management periods.[2]

The competence, impartiality, and integrity of the administration of the Federalists are a credit to the fathers of the Republic. The Democratic period sacrificed some of this quality for the benefit of the spoilsmen. The revolt against this patronage during the Moral Reform period resulted in a restoration of efficiency as a goal of public service, and it became a precursor of the Scientific Management period.[3]

The problem of quality was compounded by an increase in quantity and complexity of public problems in the twentieth century. The scientific techniques of Frederick Taylor and other pioneers in industrial management were adopted by the progressive public servants.[4] Early efforts were made to improve the quality of structure and procedure. Congress supported this trend by legislation creating the

---

[2]Leonard D. White, Introduction to the Study of Public Administration (4th ed.; New York: Macmillan Co., 1955), p. 13.

[3]Ibid., pp. 14-23.

[4]Ibid., p. 20.

Bureau of Efficiency (1913-1933) as well as the Budget and Accounting Act (1921).[5]

The impact of emergencies brought further tests of the capacity of administration.[6] The remedies of depression were without precedence and required experimentation resulting in a multiplicity of agencies.[7] These agencies were often reorganized into quasi-departments like the Federal Security Agency and the Housing Home Finance Agency.[8] Although both of these examples have achieved full departmental status, the fact remains that rearrangement does not necessarily result in great improvement in administration. World War II, as another emergency, brought further expansion of the Federal effort.[9] The over-all efficiency of the administrative effort was not materially increased. Problems of quantity and quality of public service have faced not only Federal but also state and local officials down to the present.

The computer, as a solver of these problems, has found its place in the Scientific Management period. It has increased effectiveness and productivity in government

---

[5]Fritz Morstein Marx (ed.), Elements of Public Administration (2d ed.; Englewood Cliffs, N. J.: Prentice-Hall, Inc., 1959), p. 20.

[6]Ibid., p. 21.

[7]Ibid., p. 81.

[8]Ibid., p. 177.

[9]Ibid., p. 21.

operations.[10] Nevertheless, no general sub-body of knowledge about automation has been available to the public administrator.

Questionable Ideas About Computers

An explanation of this neglect lies in the failure of people, generally, to accept automation as being favorable to society. In addition, this expensive but highly productive tool has not been properly identified.

Computers and Society

Automation is the implementing of processes by automatic means, both self-operating and self-controlling.[11] Like the Industrial Revolution, of which it is either an evolutionary part or a higher order of development, automation is feared by many. Part of this feeling may be traced to fictional misinformation about machine subjugation of man, a concept which is fundamentally irrational. Even monarchical or oligarchical use of highly sophisticated machines for domination of society is not likely; it can be argued that a great deal of freedom is required to produce and maintain the environment of inventiveness necessary for this sophistication.

---

[10] U. S., Congress, Senate, Committee on Government Operations, Report to the President on the Management of Automatic Data Processing in the Federal Government, 89th Cong., 1st Sess., 1965, Sen. Doc. 15, p. iii.

[11] U. S., Bureau of the Budget, Automatic Data Processing Glossary, 1962, p. 4.

It is possible that democracy's greatest ally could be automation. As Dewey puts it, "When the machine age has thus perfected its machinery it will be a means of life, not its despotic master. Democracy will come into its own, for democracy is a name for a life of free and enriching communion."[12]

Another fear is that unemployment will result from the use of the computer. Vast unemployment resulting from automation has not materialized. According to Simon, any "undesirable transient effects of automation" seem to come from poor handling of the change.[13] Automation not only increases the ability to produce quantitatively; it also allows resources to be devoted to research tasks, thus resulting in more and more employment.

Certain misconceptions about computer systems are commonly held. Some prevalent misinformation holds that computer results are disappointing and cost more than they are worth and that computers do routine work and have no bearing on the entire organization. Such conclusions have

---

[12]John Dewey, The Public and Its Problems (New York: Henry Holt & Co., 1927), p. 184.

There is growing evidence that the effect of automation will be generally favorable to society and to employment. A review of this evidence can be found in The Automation Hysteria by George Terborgh (Washington, D. C.: Machinery and Allied Products Institute, 1965).

[13]Herbert A. Simon, The New Science of Management Decision (New York: Harper & Row, 1960), p. 36.

been investigated and found to be groundless.[14]

Definition and Analogy

Misinformation is extensive but nowhere is it more fundamental than in definition. To many the computer by definition is limited to the use of certain disciplines of technical orientation.

The word "computers" is a misnomer. The implication is that such machines deal only with numbers. As symbol manipulators of words they become, in fact, electronic data processing systems. Seldom, if ever, are the differences between the two clearly drawn in public administration. Most often computers are relegated to the scientific/engineering areas and only to those administrative tasks that have quantitative output requirements.

There is a further tendency for persons associated with computers to fail to communicate with non-associates. Many such data processors are more interested in pursuing a professional standing for their emerging vocation than in securing the understanding of management.[15] This concentration of emphasis on particular disciplines or specialties has alienated the public executive from the computer environment.

The use of inadequate analogy in describing computers

---

[14]M. Valliant Higginson, Managing with EDP: A Look at the State of the Art (New York: American Management Ass., 1965), p. 31.

[15]Ibid., p. 25.

has led to further misunderstanding. Computers are often called "giant brains." The anatomical analogy is misleading. A computer is not a brain; however, a brain may be composed of extensive hierarchies of computers.[16] Perhaps a computer system of the future may be properly described as a "brain." The development of heuristic systems of a general problem nature is progressing.[17] At present a better anatomical analogy to describe a computer would be the term "ganglion." In interaction with computers man is the "brain," but computers can be manipulators of information or "ganglia."

Furthermore, computers cannot operate in isolation from man. The correct definition of the computer must include consideration of man's interaction with it. The man/machine compromise has been recognized; however, greater efforts have been devoted to the machine aspects.[18] The first efforts to instruct or program a computer were tedious in comparison with the speed and ease with which the plan or program was executed by the machine. These difficult human

---

[16]Saul B. Sells, Psychology and the Automation of Information Processing Systems: Use of Computers in Psychology Behavior (Fort Worth, Texas: Texas Christian University, 1964), pp. 61-62.

[17]Newell, Shaw, and Simon, "A General Problem Solving Program for a Computer," Computers and Automation, VIII (July, 1959), pp. 10-17.

[18]U. S., Congress, House, Committee on Post Office and Civil Service, Use of Electronic Data Processing in the Federal Government, 88th Cong., 1st Sess., 1963, H.R. Doc. 858, p. 23.

efforts were tolerated because the cost of machine time often exceeded the cost of human time. Once the machine was programmed, it performed with speed and accuracy and without prejudice and fatigue regardless of repetition. As the speed and capacity of computers have increased, the cost per operation has decreased. The result has been that attention can now be directed to making the interaction of man and machine less complicated. The man/machine compromise should be unbalanced in favor of man.

The misconception that the computer is an expensive office machine with which it is difficult to interact has led to a static rather than a dynamic view of computers.[19] This mistaken view, coupled with the other misinformation, has left the public administrator uninformed or confused.

Evolutionary Stages of Present Applications

Fortunately, there is improvement in this situation. The importance of management to the computer environment, and the importance of computer capabilities to management, are now being recognized.[20]

Computer applications usually arise out of the complexity or volume of variables and invariables in a problem. Since the cost of these techniques is considerable, feasibility studies of early applications were based on the

---

[19]Higginson, op. cit., p. 28.

[20]Ibid., p. 100.

anticipated savings over manual methods.[21] This led to selection of applications for computer use on an ad hoc rather than on a total or integrated basis. The first phase, ad hoc administration of computer applications, was micro, or narrow in scope, rather than macro, or broad in scope. The manual methods usually supplanted were clerical. As a clerk, a computer can produce a deluge of simple tabulated reports for human decision-makers. Management desired to be concerned not with a flood of data but only with the exceptions.

The phase that brought about management by exception is the preventive administrative phase. The term "preventive administration" has been associated with regulatory agencies.[22] Its meaning here is different and is similar to the preventive medicine concept. It is a system of reporting and treating isolated cases in order to avoid the irrationality of an epidemic. During this stage the use of the increased capability of the computer often leads to a total or integrated macro concept by means of production control devices.

The last phase is labeled predictive administration, a method which computer technology will make available to future public executives. There is already ample reason to anticipate that high-fidelity information and improved

---

[21]U.S., Bureau of the Budget, Bulletin 60-6, "Studies Preceding the Acquisition of Equipment," 1960.

[22]White, op. cit., p. 510.

rational techniques will permit the prediction of consequences of public policy to such an extent that the primary administrative effort will be focused on programming or planning new policies.

Summary

Computers are related to public administration as part of the evolving Scientific Management period. The lack of acceptance of computers throughout the public establishment is caused in part by misconceptions about computers. This situation is changing as increased utilization results in progress from ad hoc to predictive applications.

CHAPTER II

AN ELECTRONIC DATA PROCESSING SYSTEM

The purpose of this chapter is not to explain the electronic operations of an EDP system, but rather to present an orderly description of the basic units and their functions in such a manner as to dispel any mystery about such systems. An EDP system could be explained first by considering its application; yet, such an approach would be too broad. If a problem can be defined and the required resource employed, then the problem can be solved.

To begin such a task, there is a need to define basic terminology. The basic elements in both the machine and man portions of the relationship should be identified. The present method of application development should also be examined. EDP systems are usually divided into "hardware," which pertains to the machine elements or units, and "software," which includes the human elements or the instructional devices, manipulative programs, and the like.

Basic Terminology

There are two basic types of computers: digital and analog. Data processing is associated with the digital.

The digital computer, as its name implies, is a counting machine; it receives and manipulates numerical data, and can produce output made up of alphabetic and numerical characters. The analog computer, as its name implies, represents variables through physical analogies. Of the two, the digital is more common. The slide rule is a simple analog computer; the abacus is a simple digital computer.

The word "system" is often used in the rational approach to administration. In this discussion of electronic data processing systems, a system is an organized collection of parts united by a regulated interaction.[1]

Hardware

Input

The parts of the machine system of a computer may be divided into input, processing, and output. The input portion of the computer usually consists of a machine which converts punched holes in cards to electronic impulses that can be machine interpreted. This input unit is called a card reader.

The use of eighty-column cards is almost standard, as is the rectangular punch through which the machine receives the electronic signal. Most data are deliberately created by key punching, an action performed on a Printing

---

[1]Glossary of Data Processing and Communications Terms (2d ed.; Wellesley Hills, Massachusetts: Honeywell, Inc., 1965), p. 63.

Card Punch. Using a keyboard, the operator electrically produces a punched hole and prints the character of the punch in any of the eighty columns. The validity of the operation can be checked by a similar machine called a Verifier. The results of these two operations are data that are almost error free. There are a multitude of other mechanical and electronic ways to punch cards, including the use of the computer itself. The input device described as a card reader is usually associated in one unit with a punching device. In addition to punched cards, other media can be used, such as magnetic tape, paper tape, magnetic ink characters, optical character sensing, etc. The basic machine input unit is usually the card reader/punch.

Processing

After the data are converted into electronic signals, the processing or handling of data begins. It consists of storing and retrieving data, controlling the validity of the data, manipulating data logically or arithmetically, as well as performing the desired operation upon the data. All of this is carried out in a unit known as a processing unit.

Data Storage and Retrieval

Storage of data refers to the placing of given electronic signals for letters or numbers in identified locations in the system. These locations or electronic "pigeon holes" in the processing unit are called core storage. The number of individual letters or numbers that can be

stored are commonly measured by the thousand or "kilo." The core-storage capacity of the computer is designated by the abbreviation K. A processing unit having a capacity of eight thousand storage locations would be called an 8K computer. Other storage devices can be connected either directly or indirectly with the central processing unit. The most common direct or in-line types are the sequential and random access. The sequential are magnetic tape units, which operate like a tape recorder. To use a musical analogy, data, like notes, can be scanned in the same sequence in which they were recorded. On the other hand, the random access unit is like a juke box. The data are stored on disks that are arranged vertically. The random access unit can recover a particular item or group of characters from any part of any disk.

Each possible location for a single character is numbered. This number is called the address. By referring to this address it is possible to place a character at a given spot or to recover a character stored there; however, it is much easier to tag or label the address of each individual or group of characters and refer to them only by this name. The computer, if properly instructed, can locate the label, the label address, and then the data. Data retrieval is thus possible on an anthropocentric basis. The elapsed time or access time to recover data in this manner can be measured in billionths of a second. The administrator-

user should be concerned with the validity, security, and accessibility of the data rather than with the electronic mechanics of storage and retrieval.

Control of Data

While the processing unit provides basic storage, it also controls data as it is processed. This checking process is automatic in some instances. For example, the hardware is constantly checking the validity of the signals which it is handling to ensure that no change occurs. One such check is called bit parity. This is one of the reasons why high fidelity data is a characteristic of the system. Most computers also have a marginal check. This is an automatic control feature, a preventive maintenance check, that locates defective units in the system. The computer can also be instructed to double check any item, but the most important control feature of this nature is its capability of controlling its own operations. Once correctly instructed, the computer follows the plan of the user with speed and accuracy and without fatigue or prejudice.

Manipulation of Data

With high fidelity control the computer handles the data as required. Basically, three functions are executed by the processing unit. The first is the arithmetic and logical function. The machine is capable through proper instructions of adding, subtracting, multiplying, and dividing.

It can also perform a function based on a condition. For example, if two groups of characters are equal, certain operations or sequences could be performed. If other conditions are tested, then other operations or sequences could be involved, etc.

Secondly, the data in the same form in which they were introduced, or with alterations resulting from arithmetic or logical manipulation, can be transferred or moved from one designated area to another designated area. Finally, the operation of all parts of the hardware system function is designated by the user. These operational functions include starting, stopping, input/output operations, etc.

The processing unit is, therefore, the prime apparatus of the system. It is here that the plan of the user is executed upon the data. The interrelation of these functions gives the user a highly potent information system.

The future of manipulation of data is in the heuristic area. Simon envisions EDP systems capable of judging their own performance, recognizing errors, and making necessary adjustments.[2]

Output

The principal output unit of a computer system is the printer. This device is basically mechanical and usually prints at a rate ranging from 400 to 1,200 lines a

---

[2]Simon, op. cit., p. 25.

minute. Another standard output is the punched card. This can be produced by the reader/punch unit, as mentioned above. The punched cards produced by the computer have holes only, which are not interpreted into print. If it is necessary for humans to read the cards, they can be interpreted by a separate device, which prints on the card, or on a separate listing, the characters which the punched holes represent. Some keypunching devices can perform this same function. The speed and accuracy with which the computer punches cards makes it an unrivaled source of this type of output. Since the printer and the card reader/punch are in separate units, it is possible for most basic computer systems to print and punch essentially at the same time. In addition to these basic output media, additional equipment can produce magnetic tape, paper tape, cathode ray images, and drawings or maps.

Some devices have both input and output capabilities. Console typewriters and other terminal units can communicate directly with a computer system. Both input/output devices as well as individual output units can be used at a distance from the basic computer system. The use of normal and special telephonic systems allows for teleprocessing of data.

The speed of the processing unit often exceeds that of the input/output devices. Optical scanning of data could increase the input speed of future systems, and photo-chemical

printing techniques will possibly operate at 6,000 lines per minute. The future of this method as a printer of computer output should be outstanding.[3]

Software

Software is a collective name for the devices that instruct the computer. The various units of the computer are controlled by electronic signals, which are initiated by certain symbols coded into some input media. The collection of these symbols are called machine language. This vocabulary is designed for the convenience of the mechanism rather than that of man, the user. In fact, to use these symbols in the sequence required is very tedious.[4]

In order for man to use the apparatus more readily, intermediate languages which are easier for man have been developed. These devices generate anthropocentric codes into apparatocentric codes. Some have a one-code-for-one-function relationship; these are called assembly programs. Others are capable of translating one anthropocentric code into several machine functions; these are compilers. In both assembly programs and compilers the entire problem must be stated in exact detail before the computer will respond

---

[3]Edward F. R. Hearle and Raymond J. Mason, The Rand Corp., A Data Processing System for State and Local Governments (Englewood Cliffs, New Jersey: Prentice-Hall, Inc., 1965), p. 6.

[4]Bert F. Green, Jr., Digital Computers in Research: An Introduction for Behavioral and Social Scientists (New York: McGraw-Hill, Inc., 1963), p. 75.

properly. There are other language methods, but the compiler is the most common. Regardless of the method used, the primary unit of the software package is the language program.

A language is, therefore, a general problem form. The products of its utilization are the specific "machine language" instructions presented to the computer for substantive outputs. These plans of instruction are programs. The elements of the program relate to the machine unit functions and are arranged in groups or routines. Such arrangement allows for repetition of routines without a redundancy of instructions. The total collection of programs, together with the language device, make up the software package.

System Development

Since the cost of machine and man hours is considerable, adequate preparation is needed to avoid waste. This preparation is called systems development, or "systems." It is a rational development of computer programs to produce certain defined output. Present systems techniques are somewhat inefficient. At the point of translation from a human problem to a machine problem there are many chances for error. The administrator cannot usually translate his problem directly to the computer because of the difficulty of using present languages. Since he must allow systems personnel to translate his plan to the machine, there is danger of professional or transcription error. All through the process the input, processing, and output instructions

are jumbled at the caprice of the systems personnel. The development of a software system should be deductive in methodology. It usually includes a feasibility study, systems analysis, programming, and testing.

Feasibility Study

Feasibility studies are becoming less important; most people realize that application depends as much on ingenuity as on resources. Anticipated savings were the criteria for judgment of the results of many early systems. Quite often savings did not materialize. Instead the competence of the organization increased. Some feasibility studies have had the detrimental effect of developing micro rather than macro systems.

Systems Analysis

Systems analysis is sometimes completed concurrently with the feasibility study. Regardless of when it is done, it is a highly underestimated part of systems development.[5] Without proper definition the problem will never be solved. This direction toward specific results is often lacking because of the failure of administrators to be involved. Lacking this support, the systems analyst often has to include inefficient, parasite routines in order to gain staff support necessary for survival of the system.

---

[5] V. H. Goddard, "Three Steps to Systems Analysis," Journal of Data Management, II, No. 9 (Sept., 1964), p. 38.

With the support of the administrator the systems analyst can determine the criteria necessary to judge the desired results. This criterion should not be cost primarily but rather maximum results. Quite often the most results can be cheaper than just automation of manual systems. Automation of the entire process should be the goal. When a particular process requires that man be used on a routine basis, such a process should be re-examined for the possibility of using the computer. Practically any job can be automated, if the job has been clearly defined.[6]

The deductive analysis proceeds by defining the end results, then the intermediate results, and finally the source data necessary to produce both. Source data can best be obtained by automation. If the data is not in the form of some input media, the computer can assist by producing every variation of data that is expected. (It was necessary to know these variations before the problem could be defined.) Those cards not reflecting the variation that actually does occur should be destroyed. To automate source data ensures high-fidelity results. The same source data should be used by all levels of the organization.

This de novo type of definition is the preferred method. Sometimes it is necessary to define an existing system. This can be done by searching the regulations, manuals, procedure guides, and job descriptions. But this

---

[6]Green, op. cit., p. 239.

is not always productive. Interviews with key personnel are helpful, provided the discussions follow a predetermined line of questioning.

Systems people in an organization are usually limited in number. This delays the development of a total system and encourages the more routine applications. This situation can be avoided by training personnel in each subsection of the organization in basic systems analysis. Not only does this give the resulting system the characteristic of being a local product, but also the system analyst extends his production through consultation rather than through operation. Such training sessions can include the historic background of scientific management and automation, present systems techniques, and finally the analysis of some system of the organization.

This should be done in narrative as well as graphic form. Quite often it is necessary to teach the techniques of flow-charting. A flow chart is a collection of graphic symbols which show the interrelationship of each function or unit of a proposed solution. (See general system flow chart in Appendix II.) These symbols are connected by arrows which indicate the flow from source document to results. When completed, it is the skeletal framework of the processes and resources to be employed. The complete systems presentation should include a flow chart and a narrative analysis. The latter should include exhibits of the source documents and

output samples. Such documentation can save the professional system analysts weeks of work.

Programming

Once the problem has been defined, preferably de novo, the interaction with the machine technology begins. By using the analyst's report, the programmer writes the instructions for the input, processing, and output functions required. This ordered listing of the individual and groups of instructions is called "coding." Once it is complete the list is keypunched and verified. If the program was coded in a language other than machine language, the next step is to take the deck of cards (source deck) containing the instructions and have them processed by the computer using the language compiler, which changes them into machine code. Some errors of omission or commission on the part of the program can be determined by a diagnostic listing produced at this time. The resolving of these errors is called "debugging." When the program is essentially error free, the deck of machine codes (object deck) is ready for machine operation with typical input data.

The period of testing continues until every variable condition has been tested. The program may be operated parallel with any other similar system. During this time documentation and training aids are finalized. The importance of this process cannot be underestimated.

Summary

These hardware and software elements should be constantly developed into more efficient systems. The greatest dysfunction of the technology is the absence of enough persons who are knowledgeable in its use. This can be enhanced by improving the languages, achieving better functional division of the technology, and offering more extensive training. With these improvements the full ingenuity of the administrative-user could be utilized.

CHAPTER III

AUTOMATION AND ADMINISTRATION

Defining and understanding an EDP system is not enough; application is necessary before any benefits accrue. Administrative systems should be broad in scope. This total-system concept can be achieved through a control technique which includes planning, execution, and evaluating information. Properly applied throughout an organization, such a device becomes the basis for administrative automation.

The decision, as a unit of executive action, can be based on factors other than the purely administrative. Normative and behavioral responses may modify the executive action; however, the computer techniques presented here are focused on the administrative applications.

Control

The word "control" has been part of the literature of public administration for some time. In the past it was used in connection with authority or power. Mary Parker Follett defined control as "power exercised as a means toward

a specific end."[1] Leonard White indicated the reciprocal nature of power and control when he stated that "power in a democratic society requires control, and the greater the power the more need for control."[2] The power aspect of authority and control has given way to the team concept. A better word for control is "co-ordination."

What is control? Alex W. Rowe describes "57 varieties" or connotations of the word.[3] The problem of control is hard to define, but it is based on high-fidelity information.[4] The components of this information consist of measurement data about things and time. This measurement is organized into a plan, its execution, and an evaluation. In this relationship time and things have a dissimilarity. One is usually the constant and the other is the variable. In a budget the time (fiscal year) is constant, but the thing (money) is variable. In a production control problem the thing (product) is constant and the time (production time) is variable. The things may be money, materials, or the actions of men. Time measures the occurrence of an event or the existence of a condition.

---

[1]"Dynamic Administration," The Collected Papers of Mary Parker Follett, ed. Henry C. Metcalf and L. Urwick (New York: Harper & Bros., 1942), p. 99.

[2]White, op. cit., p. 495.

[3]Donald G. Malcolm, Alan J. Rowe, and Lorimer F. McConnel, Management Control Systems (New York: John Wiley & Sons, Inc., 1960), p. 32.

[4]Ibid., p. 13.

The most common control situation in public administration is the budgetary process. The budget itself is a plan for spending. Actual expenditures are made; evaluation is then accomplished by comparing these actual amounts to the budget. Thus the control cycle begins anew. Common flow-charting is often hard pressed to show a control situation because flow charts are linear, and the cyclic control situation is best portrayed by a circle.

Measurement data implies standards, which may be based on quality or quantity. Control programs concern both types of standards. The usual budget is a quantity device; however, the first Hoover Commission recommended a quality standard by advocating a "performance" budget. This type of budget is based on goal accomplishments rather than on line item expenditures.[5]

How is such quality achieved? One way is through deductive problem solving. Starting with the desired results, each sub-problem is solved to make the maximum contribution to the larger problem by using a minimum of resources. Quality is, therefore, more of a matter of definition. Measurement of even qualitative standards is usually in terms of some quantity.

Computers are ideal for solving this dilemma since computer programs are deductive, rational definitions. The

---

[5]"Summary of Reports of the Hoover Commission," Public Administration Review, IX (Spring, 1949), p. 77.

constant environment of the computer allows for extreme accuracy of quantity controls.

The organizational format of control can be expressed as a plan, an execution record, and an evaluation. The planning proceeds deductively from results to resources while the execution of the plan is inductive from resources to results. Evaluation determines the validity of the plan. The administrator may influence the value judgment, or help define the goal, but he must produce the planned results.

Planning

There are two types of plans in public administration: the master or strategic plans, which set broad, distant goals, and the program plans, which pertain to immediate output. The public executive should be concerned with both, but especially with the latter.

The computer has added to the techniques of planning. The rationality of Frederick Taylor's planning efforts and the graphic presentation of Henry Gantt's schedules in industrial planning have been reinforced by PERT (Program Evaluation Review Technique) and by CPM (Critical Path Method). Basically, both use the critical path, the longest series of events from the beginning to the end of a project.[6]

The first step, again deductively, is the

---

[6]Gabriel N. Stilian and Others, PERT--A New Management Planning and Control Technique (New York: American Management Ass., 1962), pp. 19-20.

identification of the results. Each sub-event is then determined by its contribution to the next event. Just as in budgeting, there is justification of each event based on contribution to the next goal. The quality of this contribution is often given a numerical value, but this approach is not universal.[7] The best approach seems to be a definition of the necessary quality of the contribution. There have also been attempts to set a cost figure on each event; however, such calculations are often not consistent with current accounting since an event may require the services of many departments.[8] An event in PERT is a state or condition that occurs but does not consume time; an activity is a task that does take time.[9] The best control value given to each activity is its elapsed time of accomplishment. In 1958 the United States Navy used activity and time in its initial PERT program for the Polaris Weapon System Development.[10] Simply stated, each activity is identified and given a time factor for its accomplishment. The series of events that takes the longest time is the critical path. In other words, the accomplishment of the project on time will depend on the completion of each activity of this series on schedule.

Since an activity time may not be known, it is

---

[7] Ibid., pp. 23-24.

[8] Ibid., p. 22.

[9] Ibid., p. 61.

[10] Ibid., p. 22.

possible to estimate this unknown factor mathematically. Based on the knowledge and experience of the person, who either must solve the problem or must have solved similar problems, three estimates are made:

a. An optimistic time--the time which is required if the task is performed without any problem. This is an unrealistic situation and occurs in only about one out of one hundred instances.

b. A most likely time--the time which, in all probability, will be required to complete the task, considering the usual number of problems.

c. A pessimistic time--the opposite of the optimistic estimate. A time when everything goes wrong and all problems appear also occurs in about one out of one hundred cases.[11]

Using these three estimates, the activity time can be calculated by adding the optimistic time (a) to four times the most likely time (b) to the pessimistic time (c) and dividing the total by six ($AT = \frac{a + 4b + c}{6}$).[12]

The activities that make up the entire project may be arranged as a network, a horizontal outline of each task

---

[11] Ibid., p. 62.

[12] Daniel D. Roman, "The PERT System: An Appraisal of Program Evaluation Review Technique," Readings in Organization and Management, ed. Huxley Madeheim, Edward M. Mazze, and Charles S. Stein (New York: Holt, Rinehart & Winston, Inc., 1963), p. 127.

or event in relationship to other tasks or events.[13] A network could be drawn showing activities during the preparation of a meal. Several things are going on simultaneously to achieve the objective. The time it takes to prepare the slowest item will constitute the critical path. In order to speed up the meal the production time of some phase of the preparation of this item must be reduced. When this is done, some other item's preparation may become the critical path. It is easy to see that plans may have to be changed. This flexibility of a PERT plan allows constant evaluation during execution in order to speed up production. This is programmed or controlled change, not random adjustment. In a project that has thousands of events a computer can be programmed to give a constant indication of the critical path.

By using PERT or some modification, a total systems plan can be developed. The problems are deductively defined. The interrelation of the sub-parts is known, as are estimated or actual time requirements for their accomplishment.

Execution

The plan tells when something must be done. The process of execution was considered in calculating activity or task time; however, the significant fact is the actual time of task completion. This information only has significance if it is accurate and prompt.

---

[13]Stilian and Others, op. cit., p. 38.

Source data automation can increase the validity of such reporting. It is possible to use the same source document for performing the required activity as well as for reporting its completion. For example, a computer can be programmed to punch a card which would produce an amortization schedule if a loan officer approved a loan. By submitting the card, not only will the computer produce the amortization schedule, but it will also update its own records indicating loan approval and amortization schedule prepared on the current date. When the activity is not a data-processing task, then the completion of the task can be anticipated by the computer and a reporting source document prepared.

The best automated source documents do not require any additional data. The performer should not have to indicate any condition or time. While the computer does not need it, the card may be signed for audit purposes.

If non-automated source documents are not used, then vouchers, letters, etc., are used in a manual system. Such a control system is hardly worth the effort. Each time a human being transcribes information, the incidence of error increases. When the same data goes from one level of an organization through another, the number of opportunities for errors is multiplied by the number of persons involved. The fidelity of such data makes it almost worthless. Not only should source data be automated at the lowest level,

but from that point throughout the organization the same data should be used in machine-language format.

Not only completion of an activity but also other status conditions of the activity should be recorded. The activity performer should have a machine-language source document that records any suspension or attrition of the task as well as a current procession notice. In this way the exact status of an activity can be recorded. These, like the completion source document, can be prepared as a by-product of data processing.

When cards are used for this purpose, no physical control should be maintained by staff members from day to day. It is much easier to throw all unused cards away and allow the computer to produce new ones daily based on updated information.

Finally, such source data cards should be so designed that one card can contain all the necessary data to generate the desired output and/or update the execution record.

Evaluation

Evaluation concerns the comparison of results with plans. The task-completion information should be arranged for easy comparison. This can be done by showing the actual completion date in close proximity to the planned date. For example, a bar-chart arrangement could be used with significant dates comprising the bar. On the first line would be the designation of the tasks or activities. The next line

would have planned completion dates for each task, with the actual completion date on the next line. If for any reason the activity could not be completed, then the third line would be blank and the suspense or attrition dates would be on the fourth line. With such a system a visual evaluation would give the status of each activity; however, such a procedure would not be desirable. The best approach would be preventive administration. The computer would be programmed to list those activities which are delinquent as far as the planned or suspense dates are concerned. The computer would also produce a list of activities that must be completed on any particular day. This list could be made on a basis of the activity performer and/or activity section. Such control features would give work direction to operations personnel.

Other levels of the organization could receive the same data in a more functional format. A task audit of all the various activities could be produced for the entire workload. A task summary could show the total workload of each section as well as an analysis of the anticipated overload on the current status basis. The critical-path activities only could be selected and reported. Armed with this selective data, the administrator could balance his resources with the workload requirement or use the data for justification for additional resources.

Such a reporting system would best be designed as a

cybernetic or "closed loop" system. Cybernetics is a field of technology concerned with the feedback of information. It deals with the theory of control and communication in the animal or the machine.[14] A thermostat is a cybernetic device. The temperature is regulated to a standard in a completely automatic fashion.

The control of administrative information can utilize this same principle. The performer of a task receives the automated source data as well as other control information pertaining specifically to his duties on a particular date. As the activities are processed the proper status card is selected. These cards are collected and submitted as input to a computer program which updates its files and produces various status, summary, audit, and prediction reports. At the same time it punches the next day's source data and prepares other source data for systems at other organizational levels in lieu of reports. The next day the new source data cards are delivered to the activity performer, thus closing the loop. In this manner, the entire system is controlled by the computer, with the result of high-fidelity information. (See Appendix II for a report and flow chart of a closed loop, control system.)

---

[14] Glossary of Data Processing and Communications Terms (2d ed.; Wellesley Hills, Massachusetts: Honeywell, Inc., 1965), p. 16.

The Automated Administration

Such a control device is the basis of an automated administration. In addition to time/activity information, the public executive needs to know the cost of personnel and supply resources.

The personnel cost could be computed by having the input cards collected from individuals or sections at specific time intervals and submitted for computer processing. The number of cards for a given time period for a particular task could be used to calculate the personnel cost for the same period. The number of supplies or services used by a section or individual over a given period of time could be calculated as a cost relation of the unit of output. In this manner the automated administrative system would have not only a performance budget effect, but it also could produce the standard line item budget.

Another by-product of such a system would be personnel accounting; each individual's time and attendance could be recorded for payroll preparation. The same source data with a few additions would serve this purpose.

The advantages of such a system to all levels of operation and administration would be many. The individual would know that he was getting full credit for his work and that he was keeping his own record for leave and pay purposes. He would be assured each day of receiving reliable work-direction information. The line supervisor would know his

exact workload and output for his section and for each individual. The staff officer would have unit cost and work measurement information for every type of analysis. The service and supply unit could predict support requirements. The administrator would have information to define and solve problems as well as to answer the inquiries of elected representatives with dispatch and accuracy. All of this information would be based on high-fidelity, automated, source data.

As previously stated, normative and behavioral requirements may modify administrative decisions. Automated administration could cause the reverse to occur.

Effective administration offers many political advantages. The political group with valid data has an advantage over one without it. In the rational environment of automation there is less chance for political favoritism or other unethical and politically debilitating practices on the part of staff. The ability to predict program consequences gives the politician an ability to avoid political pitfalls.

The behavioral modifications would concern a relocation of emphasis upon interaction. The frequency of interaction within the organization would be reduced from man to man in favor of man to machine. The informal, inter-organizational group would be subject to more emphasis upon co-ordination for productive purposes. Some interaction of individuals and groups would even be eliminated. The focus of interaction would increase not only in relation to machines

but also in relation to the organization's service to the public. The demand for the best possible source and evaluation data will cause an increased emphasis on those behavioral techniques which can achieve this end.

Summary

The automation of administrative procedures can be achieved by an evolution from control systems to all administrative functions. The automated administration does not eliminate the administrator but rather increases his competence regarding present problems, and at the same time it allows him to define and solve new problems with the same efficiency.

CHAPTER IV

AUTOMATION AND ORGANIZATION

It would seem logical to explain total organizational automation before administrative automation. Such a procedure, however, would not fit the average administrator's experience. The public executive comes into an organization; he rarely creates one. The first step, therefore, is the development of an automated administration. This gives the executive an idea of the present definition of the goals and the output. The present system can be then judged as to its adequacy. If the system is adequate or no change is possible, the administrator may proceed to automate each defined task to his control system. (See Appendix III for a report regarding a total system automation.) If changes are permitted and desirable, a complete revision might be necessary.

In the automation of an organization the public administrator is faced with programming change in order to avoid a dilettantish product. It is necessary for him to know about automated organizations, their desirable characteristics, and the research methods necessary to achieve them. Such understanding of research and development should include the types,

stages, techniques, and general organization of these units.

The Automated Organization

The completely automated organization is a machine. Even though a computer possesses the capability of being the integral nervous system of an automated organization, the number of specific problems that can be automated to this degree of perfection is at present restricted. In the man/machine interaction man is still necessary, particularly in the input/output relationship. Nevertheless, the higher the degree of automation, the better the decisions.

One of the best illustrations of the automated organization is an electric power system. Demand for power begins at a single outlet. Power is immediately delivered, but the specific demand helps the control computer to furnish this power as well as predict future demands. The computer adds up the power needs, calculates their delivery, and activates the generator to outlet transmission systems to meet the demand instantly. If the demand was made by a timing device, then the system could be said to be completely automated. If the demand was made by a person turning a switch, then man and machine are still interacting. This illustrates the difficulty of developing completely automated systems; yet, the history of industrialization indicates a steady trend toward fully automated devices.

Desirable Systems Characteristics

Anthropocentricism

Since the problems of public administration are usually of a semi-automated nature, the man/machine relationship must be considered. The critical point of interaction is where the person who desires some given output uses the machine. The relationship should be user centered or anthropocentric rather than machine centered or apparatocentric. Regardless of the size of the user public, in good systems the interaction must be easy for the user. In the example of the power company a person can bring the desirable electrical outputs into existence by simply turning a switch.

All problems must be well defined if they are to be automated. Definition, by its very nature, implies the setting of boundaries or restrictions. It is better if the restrictions apply more to the machine than to the user. In this way the interaction techniques are more easily learned and are more responsive to the ingenuity of the user.

Anthropocentricism is the prime criterion of any system. The other qualities of flexibility, generality, and simplicity help to emphasize this characteristic.

Flexibility

Flexibility pertains to the phenomenon of change. An output is usually some desirable change. There are programmed steps in a computer system to produce such output

or external change.

A more difficult type of change faced by a manual or automated organization is internal change. People and organizations of people have a tendency to resist such change. They, nevertheless, do change. The public systems must identify those parts of their structure which are subject to change and program for these internal occurrences in the same manner that the system supports external change. Governments face this through evolution or revolution. The government created by the Constitution of the United States is great not for its arbitrary rules but rather for its ability to achieve internal change.

Computer systems can be designed to achieve a high degree of flexibility by using heuristics. These techniques involve routines which use trial and error and involve the act of "learning" on the part of the computer. This allows the computer to recognize conditions which indicate that a change should be made. Then the computer can either execute the desired change or notify the user through some programmed diagnostic.

Not only should system changes be made with ease internally and externally, but they should also be programmed or orderly rather than made at random.

Generality

A good computer system should be macro in scope and micro in detail. The design should be on the broadest

possible basis, but the essential functional unit should be identified. By using a total or integrated system, many unnecessary functions may be abolished. The essential units can then receive the attention required.

Functional modularity also allows a broad spectrum to suit individual requirements. These units can be improved or substituted at will, thus changing the basic characteristics to meet specific needs. A good example of this process is the functional modularity used in current automobile manufacturing. By using different components and "extras," the manufacturer can produce hundreds of different models of the same basic automobile to fit any individual taste. Automation in data processing also can achieve output without mass-produced sameness. This generality, based on functional modularity, creates systems for men that are more creative and less enslaving than current manual organizational systems.

Simplicity

There are two things that determine the degree of sophistication of a system: the amount of mechanization as well as the skill and size of the user-public. If machine interacts with machine, then almost any degree of complexity can be used. Complexity of machinery is possible even when man is involved, if the user-public is skilled. The degree of skill can limit the size of such a public. If it is possible, the simplest system should be used in order to get maximum utilization of the automation.

This simplicity should manifest itself in the direct relationship between input and output. The electric-power system provides a good analogy again. When a man desires light, he flips an input switch that has a direct relationship with the output. Such a relationship is ideal in a man/machine interaction. There has been a tendency in computer software development to make things sophisticated when they should be made simpler for maximum utilization.

The characteristics of anthropocentricism, flexibility, generality, and simplicity will improve public systems development; however, the environment of change is as necessary as these criteria.

Research and Development

Environment of Change

Some commercial organizations and government agencies have recognized this need and have created separate research units. Research and development (R&D) has moved like an avalanche upon industry. Stanley and White report that expenditures for research and development exceeded $20 billion in 1965 and should increase to $30 billion, or 4% of the nation's income, in 1970.[1] Sixty-five cents of each dollar spent in industrial research and development comes from the

---

[1]Alexander O. Stanley and K. K. White, Organizing the R&D Function (New York: American Management Association, Research Paper No. 72, 1965), pp. 16-17.

Federal government.[2] A public agency does not have the freedom that a commercial operation has in organizing such a research unit. It does have some advantages; it can have reciprocal relationships with any research effort because it does not have to protect a company's products. It has, therefore, greater freedom of communication, which is important to any scientific research effort.

Basic Types of Research Organizations

The organization of such a unit can take many approaches. One approach is the development of research capabilities within the organization. The Defense Department has sometimes used this approach. Such a response is not altogether satisfactory. First, the research unit is saddled with the administrative restrictions of the parent organization. Usually personnel capable of performing research functions are not part of the personnel structure of the parent organization. To bring in such personnel is destructive to the promotion policies and pay scale of the parent agency.

Another approach is to conduct such research at educational institutions or nonprofit organizations. Ninety per cent of the Federal research money goes to these research organizations.[3] Nearly half of the entire Federal allocation

---

[2] Ibid., p. 15.

[3] Ibid., p. 22.

finds its way to the "Big Ten" research universities (Massachusetts Institute of Technology, California, Columbia, Cornell, Harvard, Stanford, Michigan, Minnesota, and Illinois).[4]

There is not a periodic census of computation equipment in the institutions of higher learning in this country. There has been a survey of the variety and quantity of machines and courses offered as of the end of 1963.[5] The greatest emphasis of both machines and courses is upon computer techniques, scientific application, and accounting.[6]

Hardware at educational institutions is usually under the control of the computation laboratory. Research and development can be done free or for a service fee, depending on the university. In any event, most free computer time must be utilized by an enrolled student or faculty member. An agency could support a member of its staff while this person is engaged as a student, or it could hire a faculty member as a consultant; thus, it could gain free computer time. Care should be taken that the goals are not limited by the policies of the institution.

If an agency selects a nonprofit organization for

---

[4] Ibid., p. 22.

[5] Dr. Helen Cole, Survey of College Data Processing Machines, Courses, and Degrees (Boston, Mass.; Las Vegas, Nev.; Santa Barbara, Calif.: Edgerton, Germeshausen & Grier, Inc., 1963).

[6] Ibid., pp. 47-86.

research and development activities, it could follow the Department of Defense example and establish its own nonprofit organization. The Air Force has used this technique quite often with good results, as in the case of Aerospace Corporation, etc. Congress, however, has looked upon the expenditure of funds for expert assistance, one of the original purposes of the nonprofit approach, with a jaundiced eye.[7] The "not-for-profit" organization has been successful in dealing with the Bureau of the Budget, even when a "fee" was charged. The basis of such justification was the so-called Bell report.[8]

Another solution is to hire a commercial firm to perform the research. From the above statistics it is easy to see that a large portion of federal research and development funds are going to this source. A problem with this solution is that most profit-making contractors have investments in software techniques. If such techniques can be reused or modified slightly for reuse, then more profit can be made. The purchase of these high-profit routines rather than the best custom-designed routines could cause less than the best results. In fact, consultants can encourage organizations not to use EDP or to use the wrong machines. Advice of whether or not to use computers can be valid, or

---

[7]U.S., Congress, House, Hearings, Subcommittee for Special Investigations of the Committee on Armed Services, 89th Cong., 1st Sess., 1965.

[8]Ibid., p. 210.

it can be based on the consultant's lack of ability.

Each type of research organization has its advantages and disadvantages. Sometimes a combination of the two may be sufficient. The administrator should be deeply involved in the final selection.

Types and Methods of Research

Wherever the work is done, fundamental definitions and methods apply. There are three types of research recognized by the National Science Foundation:

a. Basic Research. The primary goal of the investigator is a fuller knowledge of the subject under study. It is research aimed at an increase in knowledge.

b. Applied Research. The goal of the investigator is the application of knowledge.

c. Development. The goal of the development personnel is the production of a useful system.[9]

Public administration has been concerned with research for some time. Pfiffner discusses the difference between inductive reason, which is associated with basic research, and deductive reason, which is associated with applied research.[10] The turning point between the two is

---

[9]National Science Foundation, Reviews of Data on Research and Development, NSF 63-40 (Washington, D. C.: National Science Foundation, September, 1963), p. 10.

[10]John M. Pfiffner, Research Methods in Public Administration (New York: The Ronald Press Co., 1940), pp. 4-9.

whether the researcher collects data first and then forms his preliminary considerations (inductive) or whether the researcher starts with certain assumptions and then tests them (deductive). Actually both methods are necessary for scientific advancement, but one is not superior to the other even though one may precede the other. Basic research usually precedes applied research.

Applied research often suffers in public administration because it is charged against operation expense; whereas basic research may be a project and be charged against a program. Applicants for program funds find it easier to get federal money than do program-operation personnel. This does not mean that there is no relationship between operations and research; on the contrary, the purpose of the research is the automation of operations. This relationship should have a definite structure.

The Organization of Research and Operations

Research in a programmed structure should be cyclic rather than linear. This means that research should be carried on in a regular recurring pattern.

Since many applied research problems concern several fields, basic research elements of any one applied research problem may come from many academic disciplines. This, first of all, is a reason for support of basic research, particularly basic research in those areas which have definite applied research possibilities. The research-and-development

cycle begins with the gleanings from basic research, thence to applied research, on to development, and back to basic research.

In an administrative research problem the research-and-development cycle is tangent to the administrative cycle, which, it will be remembered, consists of planning, executing, and evaluating. The two circles meet between the evaluation and planning arc of the administrative cycle and the development and basic-research arc of the research-and-development cycle. While the final evaluation of the current program is being completed, the final development of the proposed program model is also being finished. The two meet and combine into the basic elements of the planning stage of the administrative cycle. The research-and-development unit returns to its cycle of activity.

Most programmed solutions have exceptions; this example will not work classically in every instance. There will be constant interaction between the two groups via their common administrator. These contacts will serve reciprocal needs. The research group will need test data from the operation group, and the operation group will need help from the research group for problems of exception. The interaction of the two should never be allowed to interfere with the completion of their individual cycles.

The staffing of each group may allow mobility. A selected number of operation personnel may transfer from the

operation group to the research-and-development group at the time and place of tangency, and vice versa. Such versatility should have a favorable effect upon staffing. No one person need be bound to one task, and a chance for further training during the research phase will be an added incentive. Such variety is now offered the individual in many instances only by changing employers. At this point most practicing public administrators will ask where these research-and-development people are coming from. As personnel who are at this time engaged in program operation are reduced by automation, they should be replaced by personnel of a research-and-development nature. Thus the staff could be upgraded to perform this vital function. As automation continues the operation staff gets smaller and the research-and-development staff gets larger. Somewhere during this process the administrator changes functionally from an ad hoc administrator to a predictive administrator.

The Stages of Research

The basic stages of the research-and-development responses may be structured functionally: subject/discipline, product/program, process/specialty, project/problem, and stage/phase.[11]

Subject/Discipline

The subject/discipline structure is arranged by

---

[11]Stanley and White, op. cit., p. 24.

academic subject or discipline. The organization is much like a college faculty minus the large teaching function. This allows for an interaction of people of the same field. It helps develop teamwork within a specialty. It is better suited to basic research responses; therefore, if applied research and development are the prime criterion of the effort, administrators should consider another type of structure.

Product/Program

In commercial operations the primary research-and-development effort is toward products which will be marketable at a profit. The comparable administrative unit in government is the program; therefore, program structure would be a better designation of this type. The program-oriented research-and-development group would bring together people of different disciplines to work on related programs. For example, a conglomerate organization like the Department of Health, Education, and Welfare could have a research-and-development effort organized in general program structure, with one unit each for Health, Education, and Welfare. With such a division it is easy to decentralize the research-and-development effort.[12] This allows for research-and-development support to field offices. Many problems capable of research solution can only be obtained by field experience.

---

[12] Ibid., p. 30.

Process/Specialty

The process type is similar to the program type except that the division is not made up by a general program but rather by a general speciality used in processing. Four specialists that are often interacting in administrative problems are operations, engineering, financial, and legal specialists.

A research-and-development effort could be organized around each speciality. Process groupings are often used in cases of diverse bodies of knowledge.[13] This type resembles the program-type structure, with the major difference being emphasis upon special technology.

Project/Problem

One of the most frequently used arrangements is the project/problem structure. As problems appear they are identified, and a team is formed to solve each problem. In effect, this method seeks to create an artificial discipline.[14] This allows for a maximum of inter-disciplinary effort, but it also may be the cause of serious dysfunctions for the individual. To participate effectively, a team member must devote himself to a specific area of the problem. By so doing, a researcher often loses contact with the advances being made generally in his field. Once the project is completed, there is a possibility that this specialized

---

[13] Ibid., p. 34.

[14] Ibid., p. 35.

knowledge is not needed.

The project type is better for applied research because of goal orientation. Just as subject/discipline structure is highly effective for basic research, the project type is excellent for program development. In fact, planning techniques like PERT can be easily associated with development. The creation of this artificial discipline may lead to new fields of study, such as cybernetics, cryogenics, etc. The project type has had better success at integration and co-operation on complex problems.[15] It is also easier for a person to go from the project structure into the operational structure of the problem.

Stage/Phase

The stage/phase structure is the eclectic type. Stanley and White use this term to designate a research-and-development effort made up of basic and applied research as well as developmental work. The research effort can be centrally organized while the development work may be decentralized. From research to development each phase is controlled.

In the governmental program of research, the research and development could use the stage/phase development for its over-all system. The basic research could be subject/discipline structured, the applied research possibly could be process structured, and the development stage could be

---

[15] Ibid., p. 37.

project structured.

Operation Research Techniques

All of this organizational effort is directed at total system automation. The techniques used within this structure have, like the computer, resulted from efforts during World War II. Operation Research (OR) saw its beginning in an organized form in Great Britain in 1939. Operation Research implies the application of the scientific method to areas outside of traditional scientific endeavors. The first such use was the organized effort to aid the Royal Air Force in the application of its revolutionary radar devices. The first efforts were devoted to communication efficiency and radar crew proficiency. These experiments aided considerably in the resulting "Battle of Britain." The next effort in 1940 was conducted by the British Army, using a mixed team. The Anti-Aircraft Command Research Group was composed of three physiologists, two mathematical physicists, one astrophysicist, one army officer, one surveyor, one general physicist, and two mathematicians.[16]

This inter-disciplinary effort is one of the major characteristics of an Operation Research effort.[17] Military

---

[16]Florence N. Trefethen, "A History of Operations Research," Operations Research for Management, ed. Joseph F. McCloskey and Florence N. Trefethen (Baltimore, Md.: The Johns Hopkins Press, 1954), pp. 3-35.

[17]Russell L. Ackoff and Patrick Rivett, A Manager's Guide to Operations Research (New York: John Wiley & Sons, 1963), p. 10.

malassignment of scientific personnel, like other personnel, has been the subject of many jokes. The joke became an asset as those scientific areas which did not have a direct relationship with the war effort were often put into operational research units. This conglomeration allowed for a broader problem identification and often for better solutions.[18]

The time, for example, that patrons have to wait for an elevator appears to be an engineering problem, which might be solved by installing more elevators, which is a costly solution. A psychologist may view the problem completely differently. The waiting time is disagreeable because it is not pleasant. The psychological solution would be the installation of elevator lobby mirrors in which people could look at themselves and others. Such examples point up the value of various scientific approaches to the same problem.[19]

Another Operation Research characteristic is systems orientation. The systems approach has already been defined and illustrated. The emphasis in Operation Research is on the identification of the results of every interaction within the system.[20] For example, the improvement in central-office reports cannot be divorced from the problem of field-office collection of source data. As stated

---

[18] Ibid., p. 19.

[19] Ibid., p. 21.

[20] Ibid., p. 10.

previously, input and output have a relationship, and the more direct this relationship, the better the system. Operation Research utilized this idea that everything in the system has an interrelationship.

The last characteristic of Operation Research is the use of the scientific method.[21] The purpose of all this research effort is the improvement of decisions, by the removal of luck, intuition, prejudice, etc., from the selection of consequences. This method, in the case of Operation Research, begins with the statement of the problem, the collection of data, the analysis of the data, the formulation of solutions, and the selection of the optimum course of action.

How does this differ from scientific management, which has been recommended by many for some time? Simon states that the two are not separate except that the Operation Research people tend to use rather high-powered mathematics.[22] This higher mathematical quality has led the professional practitioners of Operation Research to recommend that the manager not devote himself to the mathematical "how" but rather to the desired results.[23] The situation is similar to the relationship of the administrator to an EDP

---

[21] Ibid., p. 10.

[22] Herbert A. Simon, The New Science of Management Decision (New York: Harper & Row, 1960), p. 14.

[23] Ackoff and Rivett, op. cit., p. vii.

system. The complexity of a computer is not as important as the ease of obtaining desired output.

Operation Research seeks, generally, to relate controlled or constant aspects of a system with uncontrolled or variable aspects.[24] This is possible through the process of separating the form of a problem from its contents. In some languages other than English this is more easily understood, since there is a separate word for each. Algebra is concerned with form. The simple equation A + B = C is a pure form, but in an actual situation the contents can be defined, and a solution can be reached, for example, 2 + 3 = 5. The Operation Research researcher builds a mathematical model or form. Once this is done, the correct type of mathematics can be applied.

It would be nice to say that there is only one form which could be adapted to the contents of any problem. Research on general-problem solvers is going on; however, the public manager must look to a limited number of general techniques for solving these problems. Basically, they are linear programming, queuing theory, game theory, statistical analysis, dynamic programming, and simulation.

Linear Programming (LP)

Linear programming is a mathematical technique for dealing with limited resources. By using this technique, a public administrator can make the best decision in such

---

[24] Ibid., pp. 24-25.

problems involving blending, allocating, waste reduction, and transportation of resources.[25]

Queuing Theory

Queuing theory concerns waiting lines or queues. Quite often output flows through a check point or bottleneck. The queuing theory is one way to calculate the most efficient handling of the job.

In such waiting-time problems there are two factors: the service facility or person and the customer or object moving through the check point. Either of these may be variable and the other constant. Another method for solving the problem, known as the Monte Carlo method, uses alternative procedures until the best is found.[26]

Game Theory

Game theory deals with decisions in competitive situations. There are all sorts of ways to classify competitive problems:

a. Situations where a competitor's action is known, as in oil company price wars.

b. Situations where a competitor's action is not known, as in bids on the same job.

c. Situations where the competitor is not known, as

---

[25]Kurt Meisels, A Primer of Linear Programming (New York: New York University Press, 1962), pp. 1-4.

[26]Russell L. Ackoff, "Prototype Models in Operations Research," Scientific Decision Making in Business, ed. Abe Shuchman (New York: Holt, Rinehart & Winston, Inc., 1963), pp. 138-39.

in an invasion from another planet.

These problems can be terminal or continuous, and group action can be used.

It would seem to many that such techniques would not be very applicable. The theory of games is limited; but if the values of the game matrix are valid, good results can be obtained. Military war games are an example.[27]

Statistical Analysis

The most familiar of the techniques is statistical analysis, which is familiar in name but not in practice. Even the physical scientist who can use mathematical models and probability theory is not usually in contact with mathematical statistics and statistical inference.[28] The social scientist has been progressing more rapidly in this area.[29]

Statistics deal with the collection and analysis of data. Probability models give answers with measurable error, which arise when the variables change value. To make a better estimate, an average value might be helpful. To get an average one must have representative samples based on experience of the identified variable.

The two critical tasks of statistical analysis concern how the sample is made and how inferences can be

---

[27] Ibid., pp. 50-52.

[28] Trefethen, op. cit., p. 117.

[29] Ibid., p. 118.

drawn from the sample.[30] The body of knowledge that covers this area is considerable.

At one time errors and cost in obtaining and analyzing data increased as the size of the sample increased. The computer has changed some of this. Throughout this work, the term "high-fidelity data" has been used. The quality of data involves two things: the correct type of information and the correct contents of the data. These are the resources of the predictive administrator. His professional decisions and eventual reputation are based on them and on their scientific processing. Statistical analyses are a necessary part of this processing inventory.

Dynamic Programming

Dynamic programming is relatively new. It has been in the vocabulary of Operation Research only since 1952.[31] This technique concerns the making of the best decision at each stage of a multistage problem. The design of a strategy or policy is not enough. What is desirable is the best decision at each stage--the optimal policy. The initial decision is made as the best possible decision at the beginning; each following decision must take into account the results of the preceding decisions and a limited number

---

[30] Ibid., p. 119.

[31] Abe Shuchman, "The Nature and Characteristics of Dynamic Programming Problems," Scientific Decision Making in Business, ed. Abe Schuhman (New York: Holt, Rinehart & Winston, Inc., 1963), p. 206.

of criteria.[32] Dynamic programming prevents the compounding of inefficient early-decision errors.

Dynamic programming is to decisions what PERT is to task accomplishments. It can be just as valuable to the public administrator as to the businessman.

Simulation

A mathematical model is based on calculation. Some problems are impossible to calculate; the complete model of the universe is probably the hardest. Other mathematical models may be too costly. Simulation is cheaper because only the data relevant to the problem has to be manipulated. Solutions are simpler, but they are also less general.

Simulation is a kind of experiment. Its success depends on the amount of detailed realism. It is a tool for coping with a lack of information. It is valuable because it is easily understood.[33]

Simulation is well known as a training aid. Flight simulators used to train today's pilot not only reproduce the action of aerial combat but also the sound. In the final analysis, simulation is an artificial model.[34] It has

---

[32] Ibid., pp. 207-208.

[33] Donald G. Malcolm, "System Simulation," Scientific Decision Making in Business, ed. Abe Schuhman (New York: Holt, Rinehart & Winston, Inc., 1963), p. 406.

[34] Oliver Benson, "Simulation of International Relations and Diplomacy," Computer Applications in the Behavior Science, ed. Harold Borko (Englewood Cliffs, N. J.: Prentice-Hall, Inc., 1962), p. 579.

its place in experimentation and training. By simulation the public administrator can identify obscure problems, which can then be given scientific treatment. He may use a simulated organization to learn new techniques.

Summary

This chapter has dealt with the forms of the problem of organizational automation. The desirable characteristics of a system are anthropocentricism, flexibility, generality, and simplicity.

It has been shown that these characteristics are found in semiautomated and fully automated organizations, but the latter can increase the sophistication of hardware as the interaction of man decreases. Such conclusions apply to "closed loop" automated organizations like electricity-production companies; however, they may apply as well to social systems.

The various environments of change or research and development have been shown to exist in capabilities found in commercial, in-house, nonprofit, and higher educational organizations. The kinds or stages of research have been divided into basic research, applied research, and development. The basic structuring of any type of research in any environment can be according to subject/discipline, product/program, process/specialty, project/problem, or stage/phase. The problems of change, like all of the above, can be divided by form. To program change, general scientific or Operation

Research techniques can be used in an organized plan, using quantitative methods, and with a team of scientists possessing a varied background. Some of these Operation Research problem solution forms are linear programming, queuing theory, game theory, statistical analysis, dynamic programming, and simulation. The forms of solutions to system change await only the application of the contents of the problem.

The computer, therefore, can be used not only as an operational device but it also becomes the basic unit of the research-and-development effort. The automation of the organization begins with basic research probably in the educational or nonprofit institution area, structured by process. Applied research would use the Operation Research techniques to carry out the automation effort. The stage/phase structure could be utilized in development, and the new program would be ready for execution.

The automated public organization may never be absolute; however, in the proper organizational context it can refocus public administration upon efficient predictive efforts.

CHAPTER V

AUTOMATION IN PUBLIC ADMINISTRATION

Public administration, as a field of study, is easy to define generally but difficult to define peripherally. This chapter concerns the classification of computer applications of a public administrative nature. Public administration, for this purpose, will be considered as a part of the discipline of political science. Applications can be typed as inter-discipline and intra-discipline, in this context. Of additional interest are the administrative responses of certain professional specialties as well as international, public administrative systems. Such classification is possible by type of application because the number is not large. Automation, like mathematical techniques, seems ideally suited for public administration.[1] Comparatively little use, however, has been made of computational methods.

---

[1]Oliver Benson, "The Use of Mathematics in the Study of Political Science," Mathematics and the Social Sciences, the Utility and the Inutility of Mathematics in the Study of Economics, Political Science, and Sociology, ed. James C. Charlesworth (Philadelphia: The American Academy of Political and Social Science, 1963), p. 35.

Inter-disciplinary Applications

The inter-disciplinary efforts in EDP and other areas are a result of a tendency of "integration of the disciplines."[2] Historically, most scientific knowledge grew out of philosophy, each emerging area of specialty being a splinter of a larger area. Today many of these splinters are uniting around a focal process--for example, the mixed-team concept of Operation Research. The reblending of social science by the catalyst of mathematical methods has been going on for some time in the behavioral approach to political science.

Man in interaction within society and environments is the area of study of the behavioral scientist.[3] The behavioral scientist uses empirical evidence from which to explain his conclusions. His theories are analytic rather than substantive.[4] The characteristics of the behavioral methodology are generally the same as in Operation Research: scientific method, systems orientation, and an inter-discipline approach.[5]

---

[2]David Easton, "The Current Meaning of Behavioralism in Political Science," The Limits of Behavioralism in Political Science, ed. James Charlesworth (Philadelphia: The American Academy of Political and Social Science, 1962), p. 15.

[3]Harold Borko, "Computers and the Behavioral Scientist," Computer Applications in the Behavior Sciences, ed. Harold Borko (Englewood Cliffs, N. J.: Prentice-Hall, Inc., 1962), p. 4.

[4]Easton, op. cit., p. 25.

[5]For behavioral characteristics, see Easton, op. cit., pp. 7-8. For Operation Research characteristics, see Ackoff and Rivett, op. cit., p. 10.

The statistical training of psychologists led to their early utilization of computers.[6] The validity of their findings was increased since they could increase their sample as well as sophisticate their techniques by using the computer.[7] Some techniques not previously possible were now performed--for example, canonical analysis, a method for dealing with interacting variables.[8] Not only did the simulation of man as an individual become possible, but studies could be made of man as a group.[9]

Thus far, the behavioral point of view has been referred to in connection with the idea that the automation of an organization reduces the incidence of human interaction. This reduction is in the execution or operation of the program; however, the number of interactions may increase as the competence of the system allows for a greater work-load, increased research-and-development effort, and greater concentration on the human input to the system and the value of the output to human beings. This means that the administrator

---

[6]Lowell Kelly and James C. Lingoes, "Data Processing in Psychological Research," Computer Applications in the Behavioral Sciences, ed. Harold Borko (Englewood Cliffs, N. J.: Prentice-Hall, Inc., 1962), p. 173.

[7]Charles Wrigley, "The University Computing Center," Computer Applications in the Behavioral Sciences, ed. Harold Borko (Englewood Cliffs, N. J.: Prentice-Hall, Inc., 1962), p. 168.

[8]Ibid., p. 138.

[9]Benson, "Simulation of International Relations and Diplomacy," loc. cit., pp. 575-95.

will not escape the behavioral problem. Since scientific methodology is used by the behavioral scientist as well as by the operations researcher, the predictive administrator will have an interest in the forms and solutions of problems in the behavioral area. The gathering of high-fidelity data (from empirical sources), which is processed rationally in a computer environment, is one of the same scientific methods which the public administrator will use in program planning. In the automated system the location of behavioral problems outside the system will have a dendritic pattern. The root system will be any interaction (man/man or man/machine) necessary to obtain the input or source data as well as the program for their manipulation. The amount of human interaction decreases as the data are processed by EDP through the trunk of the dendritic form, and again the interaction increases as the output is made available to man. Since the incidence of interaction is greater in the extremities of input and output, the public administrator will want to use the best reasonable behavioral solutions to problems of this nature. This interdiscipline factor is further implied by the normative, behavioral, and operational nature of public decisions.

All the decisions of an administrator are not adaptable to scientific technology. Some decisions are pure value or normative in nature. Other decisions may concern behavioral problems. Judgments of this nature may modify or

occasionally overrule the scientific findings. Quite often such actions are taken where there is lack of definition of problem as to form and content and/or inadequate data. Decisions of policy are most often involved in this normative and behavioral area.

Lindblom and Pfiffner, among others, have worked on the nature of policy decisions.[10] In cases where value is involved or where fact and value cannot be separated, quasi-rational decisions may be justified; however, decisions based on "muddling through" or "successive limited comparison" may be incorrect if used when scientific methods are applicable and accessible. The history of science has shown that many values based on conjecture or speculation have been unsettled or corrected through scientific methodology. The computer, properly programmed, using quantitative and qualitative high-fidelity data, should be applied in the decision-making process. The best normative and behavioral decision techniques should be known and applied--but not over applied--by the public administrator. The point to be stressed is that the best decisional technique, either singly or in combination, should be sought and used. This is the primary

---

[10]For information on policy-decision techniques, see John M. Pfiffner, "Administrative Rationality," Public Administration Review, XX, No. 3 (Summer, 1960), p. 125; Charles E. Lindblom, "The Science of Muddling Through," Public Administration Review, XIX, No. 2 (Spring, 1959), p. 79; David Braybrooke and Charles E. Lindblom, A Strategy of Decision (London: Collier-Macmillan, Ltd., 1963).

emphasis of the predictive administration. The automated organization will make possible the concentration on problem solving rather than on program operation.

Intra-disciplinary Applications

Political science has not been immuned to this revolution of method. The quantitative techniques have permeated its subdivisions; but some of the more traditional areas, such as public law and political theory, are less affected than others.[11]

The inter-disciplinary nature of international relations caused it early to apply mathematical methods. Comparative government is rapidly turning to scientific methods, and the investigations of political parties, pressure groups, and the like are ideally typed for this particular methodology.[12]

The vote and the election process have been the subject of much study. This body of knowledge is called "psephology," and at present the known problem forms are limited. But the possibilities are limitless. For example, the cube law states that there "is an apparent equality between the ratio of votes in a two party election and its cube as the ratio of contested seats won by the two parties."[13]

---

[11]Benson, "The Use of Mathematics in the Study of Political Science," loc. cit., p. 33.

[12]Ibid., pp. 34-35.

[13]Ibid., pp. 36-37.

In addition to mathematical techniques, simulations are possible. An interesting study of this nature is the Leviathan Method developed by Beatrice and Sydney Rome of the System Development Corporation. These researchers have been investigating methods of studying communication in large social organizations. Their method comprises theory, computer programs, experimental simulations, experimental controls, and quantitative measurement of performance. The method employed by these researchers concerns people as interactors within a simulated semiautomated governmental organization.[14] The computer simulates "the significance, meaning, and intentions that characterize the human world; all with the vigor and precision of formal, deductive methods."[15] This artificial federal-agency organization can not only be simulated, but it can be manipulated in experiments. A test-tube agency would be an ideal place to test new programs in the research-and-development section of an automated public organization.

It should be apparent that this experimentation in the political science will lead to new forms of problem solutions that will affect public administration. In addition to this experimental accomplishment, the political

---

[14]Beatrice Rome and Sydney Rome, Communication and Large Organization (Santa Monica, Calif.: Systems Development Corporation, 1964), p. 7.

[15]Ibid., p. 93.

science discipline is now developing introductory training works.[16]

Professional Specialties

The public administrator deals with professional specialties that could be classified academically as either inter-disciplinary or intra-disciplinary. In the course of practicing public administration the contact is usually with individuals of professional groups rather than with the area of knowledge itself. Three common professional groups are attorneys, engineers, and financial specialists. The engineering and financial professional groups are highly committed to automation. This relationship with computers is enhanced by the existence of procedure- and problem-oriented languages, FORTRAN for engineers and COBOL for financial professionals. The attorneys comprise the least automated group.

Law

The scientific investigation of legal problems has a special name--jurimetrics.[17] Proponents of this sub-body of jurisprudence have used the computer in experiments that concern information storage and retrieval, symbolic logic,

---

[16]Kenneth Janda, Data Processing Applications to Political Research (Evanston, Ill.: Northwestern University Press, 1965).

[17]Lee Loevinger, "Jurimetrics--The Next Step Forward," Minnesota Law Review, XXXIII (1949), p. 455.

and behavioral studies.[18] The quantity of this work is not large and has been attacked by members of the legal profession.[19] Present jurisprudential methods are considered by many to be scientific. The jurimetrics school differs from this group by its use of quantitative methods.

The point should be made that computers are not envisioned as practicing advocates and counselors but rather as highly efficient law clerks and consultants. The information storage and retrieval experiments are many and promising.[20]

The use of computers and the behavioral-science techniques have been used to study judicial behavior in quantitative terms. Game theory is also suited for use in the study of courts and cases.[21] Of course, such questions as what is a "community standard" or a "good moral character" can be subjected to scientific investigation. So far the

---

[18]Hans W. Baade, Law and Contemporary Problems, XXVIII, No. 1 (Winter, 1963), p. 1.

[19]Reed Dickerson, "Some Jurisprudential Implications of Electronic Data Processing," Law and Contemporary Problems, XXVIII, No. 1 (Winter, 1963), p. 53.

[20]See Layman E. Allen, Robin B. S. Brooks, and Patricia A. James, Automatic Retrieval of Legal Literature: Why and How (New Haven, Conn.: Walter E. Meyer Research Institute of Law, 1962); Electronic Data Retrieval Committee of the Bar Activities Section of the American Bar Association, Applications of Electronic Data Processing Systems to Legal Research (Washington, D. C., 1960).

[21]Walter Berns, "Law and Behavioral Science," Law and Contemporary Problems, XXVIII (Winter, 1963), p. 187.

lawyers, as a group, have not joined the behavioral practitioners. Symbolic logic is not the stock-in-trade of attorneys, but it has been used to study the combination of facts and the subsequent decision based on these facts.[22] Further investigation should have some influence on future understanding of the principle of stare decisis.

The amount and the variety of experimentation in this area have been limited at this time, but an increase in the dialogue should be mutually beneficial to lawyers and to automation proponents.

In 1963 the Housing and Home Finance Agency, Region V, began a study to determine the feasibility of and to develop actual programs for automating professional and clerical tasks in the College Housing Program of the Community Facilities Administration. Project SPUR (Systems-Procedure Update Research) received able systems support from all professional groups except the attorneys. The lack of a co-ordinated systems effort seemed to come from an absence of knowledge about scientific methods. Legal systems await only the ingenuity of the profession.

Engineering

Engineering is, of course, part of the EDP revolution. Its use of mathematics has become almost completely

---

[22]Fred Kort, "Simultaneous Equations and Boolean Algebra in the Analysis of Judicial Decisions," Law and Contemporary Problems, XXVIII, No. 1 (Winter, 1963), p. 143.

automated from design to construction. Any engineer whose techniques were acquired as late as the middle 1950's is in need of "retooling." The young graduates of today's engineering schools speak a different language than their World War II predecessors. New solution forms are being developed constantly, and there is a deluge of ad hoc applications.

The public administrator could come into contact with this discipline in the hardware area of EDP. In many agencies the engineers dominate the EDP system. Care should be taken that the hardware configuration is not unbalanced in favor of scientific computing at the expense of data processing. When the administrative and engineering automation must be done at the same installation, careful planning is necessary to ensure a hardware system that will do both jobs. A continuing responsibility of the administrator is to ensure that both jobs receive ample machine time. In situations of this nature engineers have an advantage, since they usually speak the "jargon." Any policies about the hardware, however, should be the prerogative of the administrator. A final word of caution: engineers know mathematics, but they do not necessarily know statistics. An engineering solution may be quite different from a statistical solution. The engineers, like the attorneys, are more ad hoc than empirical in their solutions.

Finance

Another discipline heavily involved in EDP is the area of finance. Financial analysts and accountants are often the dominant user groups in many public organizations.

From tax collection to expenditure accounting, fiscal management is one of the most automated areas. The software packages in this area are many and varied. The problem is not with the feasibility of automation but rather with the efficiency of the system.

In financial systems an inefficient practice may be small but very costly. For example, the improper rounding off of a penny could cost a government agency millions of dollars over a period of years. The administrator must be positive that each decision of the system is correctly made. The form of the solution should be known and periodically audited.

With the same care, the administrator will want to ensure that bond analyses and amortizations are correctly performed. A technique might work but actually be losing money because of inefficient mathematical computations. For example, amortization schedules may be written in such a manner that increased interest can be charged a borrowing government body, yet the schedule will "come out" right with regard to number of bonds and number of years. The Federal government is one of the largest bond owners; therefore, the control of a sizeable portfolio may be part of an administrator's responsibility.

International Systems

The comparative study of EDP and public administration has been limited. There are some international associations which perform this work. But most are machine oriented and dominated by the United States membership, such as the Data Processing Managers Association. A limited source of comparative systems information can be found in Technical Translations, a bimonthly publication of the Office of Technical Services, Department of Commerce. This is a bibliographic listing, the last section of which is usually devoted to a limited number of social-science systems. This same office publishes periodic special bibliographic listings. Other Federal publications have occational systems data.

Let it not be assumed that other national and ideological groups are not concerned with the fundamental question of social-science problem-solving. The European EDP effort is growing enormously. Germany increased its computer inventory from 996 machines in 1963 to 1,657 machines in 1964. France increased its computer population by 88 per cent. In addition, Sweden, Italy, and Great Britain are important users of the device.[23] In this decade the Soviet Union adopted a comprehensive program to mechanize

---

[23]"Automation Abroad," Public Automation, I, No. 2 (July, 1965), p. 4.

many public administrative tasks,[24] but it is currently reported that their results are not outstanding.[25] The need in the area of international systems is for more comparative EDP studies.

Summary

As a field of study, public administration is broad, but computer applications can still be classified according to whether the problem to be solved is solely in the discipline of political science or whether it includes other disciplines. The form and substance of these problems are of interest to the public executive in his role of innovator. Of equal interest is the response to the computer of professional specialties with which public administration is often involved. In the same manner, international systems information is of value.

---

[24]Djangir A. Kerimov, "Cybernetics and Soviet Jurisprudence," Law and Contemporary Problems, XXVIII (Winter, 1963), p. 77.

[25]"Automation Abroad," Public Automation, I, No. 2 (July, 1965), p. 4.

CHAPTER VI

AUTOMATION IN FEDERAL ADMINISTRATION

One method of classification of administrative governmental systems is by level, branch, and agency. The executive branch is usually associated with public administrative problems, but it does not have a monopoly on these problems.[1] The legislative and judicial branches have internal administrative problems as well as interaction with executive problems of this nature. The branches of the Federal government are not divided absolutely; however, the division is sufficient for systems classification.

The Executive Branch

An Overview

On March 4, 1965, a Report to the President on the Management of Automatic Data Processing in the Federal Government was submitted to President Lyndon B. Johnson. It included these introductory remarks:

---

[1]Herbert A. Simon, Donald W. Smithburg, and Victor A. Thompson, Public Administration (New York: Knopf, 1950), pp. 7-8.

In the short span of a decade, the electronic computer has had an unprecedented effect upon the conduct of Government activities. Use of this equipment has enabled Government to carry out programs never before possible, and it has facilitated the provision of services more effectively and economically, thereby contributing significantly to the rising productivity in governmental operations.

However, the use of the electronic computer has created a variety of problems. Some of these have been successfully resolved; others are still matters of concern. In order to aid in the solution of current problems and those that may well arise in the future, a comprehensive study has been made of the management of electronic data processing activities in the Federal Government. This report is based largely upon that study.

No single technological advance in recent years has contributed more to effectiveness and efficiency in Government operations than the development of electronic data processing equipment. Most of the important advances that have been made in such diverse fields as space exploration, research of all types, weather forecasting, and atomic energy would not have been possible without the computer. In the field of large-scale clerical operations, such as insurance processing, checkwriting, and the tax system, the computer has materially assisted in producing major economies. Furthermore, the computer is becoming increasingly useful to managers in solving complex problems involving interrelated types of information. The most notable of these have been in military areas and in supply management, but the use of computers to support advanced management techniques is becoming common in a broad range of governmental activity. Based on results achieved to date, this latter type of use of computers holds a potential of outstanding importance in the public service.

In addition, there is the largely untapped area of integrating related information systems that cross organizational lines.

Accordingly, it seems reasonable to assume that the impressive advantages to the Government already achieved through automatic data processing (ADP) are but stepping-stones to the future.

The Federal Government is currently making substantial expenditures for the acquisition and utilization of electronic computers. Inventory statistics show that in the fiscal year 1964 nearly $1 billion was expended for this purpose, and some 54,000 man-years were utilized in the operation of 1,767 computers. This number of computers is estimated to represent about

> 10 percent of all the computers in the Nation. In addition, however, estimates indicate there are at least an equal number of computers used in the Government that are excluded from the inventory because they are employed primarily in unique military applications. Further, there is another group of equal size operated by contractors who perform work for the Government on a cost-reimbursement basis. The magnitude of the expenditures itself provides sufficient reason for assuring that proper attention is given not only to the effective use of computers, but to economy and efficiency as well.[2]

It is significant that this report should concentrate so heavily on the hardware aspect of the Federal EDP problem. For several years the focus of attention has been on the cost and control factors of EDP, at the expense of all others. In the Bureau of the Budget, beginning with the bulletin entitled "Studies Preceding the Acquisition of Automatic Data Processing Equipment," emphasis has been on the savings that could be made on an ad hoc basis rather than on a form of solution basis.[3] The Comptroller General submitted to Congress a report entitled "Study of the Financial Advantages of Purchasing over Leasing of Electronic Data Processing Equipment in the Federal Government,"[4] in which the following conclusions were reached:

> With the present system of decentralized management in the Federal Government under which each agency makes

---

[2]U.S., Report to the President on the Management of Automatic Data Processing in the Federal Government, pp. 1-2.

[3]Bureau of the Budget Bulletin 60-6, March 18, 1960.

[4]Ibid., p. 38.

> its own decisions as to whether the use of data processing equipment should be acquired by lease or by purchase, there is no effective coordinating machinery at work to give consideration to these alternatives from the standpoint of benefit to the Government as a whole. Because of the very substantial financial savings that can be realized through more extensive purchasing of such equipment and the related need for directing and coordinating its utilization throughout the Government, we are recommending to the President of the United States that a central management office suitably empowered to perform these functions be established in his organization. We are convinced that the establishment of such an office is the only practicable way to provide the kind of management that will make possible the realization of savings of hundreds of millions of dollars in the years to come.[5]

This statement was the opening shot for a running fight between the agencies in favor of decentralized EDP and the General Accounting Office. The Bureau of the Budget backs up the agencies in this argument; it sees a centralized computer management as a threat to the mission accomplishment of agencies so regimented.[6]

This brings us to the overview of EDP in the Federal government; it is characterized by a failure to identify the problems. One problem is whether to purchase or to lease the computers. In this instance both sides may be right. The purchase of some computers is good business, while the rental of others has merit. The early obsolescence of hardware and the lack of standardization between manufacturers coupled with the lack of a definition of the future computer

---

[5]U.S., Use of Electronic Data Processing in the Federal Government, p. 39.

[6]U.S., Report to the President on the Management of Automatic Data Processing in the Federal Government, p. 36.

requirements of the Federal government causes purchases to be made on a current-use basis, which is highly inefficient. There are now and there should be in the future more centralized computer services available; however, some agencies have programs with time limitations which must be run. It would be difficult to schedule all the work that needs to be done by all agencies at the same time. Definite plans for future EDP needs should be developed, and equipment from any manufacturer should have both standard functional modularity to allow for a hetergeneous array of work and the capability of being updated, in order to prevent obsolesence.

With the best centralized system there will be a need for some in-house computing capability. The problem is twofold: what in-house hardware is needed, and what centralization is needed?

Some current experimentation should help to solve the problem. The Air Force Systems Command has built what it calls an iterative array computer, which can perform one hundred operations at the same time, in comparison to one operation currently being performed by sequential digital machines.[7] Such an EDP system should be functionally divided like the present telephone system. The input and output instrument in the telephone system is located at the convenience of the user, while the switching mechanism is

---

[7]Public Automation, I, No. 2 (July, 1965), p. 4.

located at a centralized location. By using current or future hardware like the iterative computer, the input/output hardware would be under the auspices of the user while the handling of data (processing and storage) would be centrally located. The Federal establishment has thus far ill defined the problem. Both sides of this controversy are right as well as wrong.

Another major problem is the utilization of the hardware. The man portion of the man/machine contract has been slighted by Federal planners. The Committee on Post Office and Civil Service has covered this better than the Bureau of the Budget:

> A strong tendency has existed throughout the growth of electronic data processing to concentrate on the development of equipment to a far greater extent than on development of the man in the system. As a consequence, EDP machines are capable of performing many more tasks than people are requesting of them or capable of instructing them to perform. This imbalance of capability has been referred to earlier as a man-machine ratio problem, also as a technological gap. It is important to note that only recently has electronic data processing been referred to as a "system" which includes people and their functions along with the equipment. If, for example, the same imbalance of emphasis we have experienced in EDP were practiced in the field of space exploration, the result could be disastrous. In the case of EDP, the imbalance results in higher costs than necessary, wasteful consumption of time, undue hardship on people, and impediment in general of full realization of EDP capabilities.
>
> It has been said that if EDP equipment technology were to remain in its present state for years to come, we would only scratch the surface in how to use it. Regardless of whether or not the statement is exaggerated for purposes of making a point, it is illustrative of the situation. It is believed, also, that Government organizations and the EDP industry have recognized the problem and that they are trying to do something about it. The difficulty seems to lie in the insufficiency

> of emphasis being placed on the problem and in the modest approaches to the solution of it. The highly uneven balance in capability between people and machines is a most critical problem, and one which should be attacked with full emphasis and in full strength.
>
> Further evidence of the existence of this imbalance is to be found in the one-sided emphasis which has been placed on the cost of EDP equipment. Efforts to control equipment costs are absolutely essential, and the subcommittee certainly wants this attention continued, but this is only half of the job. There are indications that personnel costs now run to 50 percent of all EDP expenditures, and therefore they are the other half and may be expected to increase percentagewise. With personnel costs such an important part of the total, the subcommittee is at a loss to understand why so little has been said about so much. This seeming neglect of personnel costs should be corrected and personnel costs should be considered and controlled with care equal to that exercised in regard to equipment.[8]

Some of the issues raised by the committee can be seen in the inadequacies of current EDP research. As the Report to the President states, "Of the $15 billion being devoted to research by the Government, at least $135 million is applied to computer sciences."[9] About $91 million of this amount is spent by the Department of Defense. The remaining $44 million is in basic, applied, or development stages of research and development with little organization, much duplication, little exchange of information, except through the National Bureau of Standards, Department of Commerce, and virtually no over-all planning.[10] For basic

---

[8]U.S., Committee on Post Office and Civil Service, p. 23.

[9]U.S., Report to the President on the Management of Automatic Data Processing in the Federal Government, p. 53.

[10]Ibid., pp. 53-54.

research the situation is not too bad; however, for applied research and development it is irrational and wasteful.

Even the staffing problem, like the shortage of EDP personnel, could be materially improved by research. Training in EDP technology should be encouraged not only in the school-age individuals but especially in those who presently are Federally employed.

As for the effects of EDP on the Federal employee, automation does not seem to have been as disastrous as one might imagine. When the need for production exceeds the capacity or cost of production, then technology must be improved in order to meet the demand. This is probably the reason why great worker displacement is not prevalent in automated situations. The human resource is utilized as output increases through improved competence. Some agencies have shown a reduction in personnel as well as increased productivity. For example, the Division of Disbursement, U. S. Treasury Department, employed 1,891 persons in fiscal year 1960 and issued 282 million checks. In 1962, after improved automation, it employed 1,625 persons--266 fewer persons--and issued 316 million checks--34 million more checks, indicating a 30 per cent increase in competence.[11] Over this two-year period the number of workers displaced was limited probably because the reduction was accomplished

---

[11]U.S., Use of Electronic Data Processing Equipment in the Federal Government, pp. 36-37.

by attrition. This means that automation decreases the rate of acquisition of employees.[12] Valid statistics are not available to prove this point throughout the Federal establishment.[13]

It is fact that Federal automation has helped to keep the percent of increase of Federal personnel, both in numbers and cost, below that of state and local governments, which have a lower rate of automation.[14] This reduction in acquisition rate may mean fewer low-level jobs but usually an increase in jobs requiring great competence. The experience of the Treasury Department is not common. The Bureau of the Budget reports that many agencies indicate a lack of reduction in force after advent of automation because of increased work-load.[15] This would indicate the validity in the statement that the computer can satisfy a need for increased productivity.

Another problem which the Federal government faces concerns full utilization of its hardware. Computers are not like people; machines can be worked twenty-four hours a day, seven days a week.

While the General Accounting Office has not been

---

[12] Ibid., p. 16.

[13] Ibid., p. 38.

[14] Hearle and Mason, op. cit., p. 12.

[15] U.S., Use of Electronic Data Processing Equipment in the Federal Government, p. 16.

successful in developing centralized computer management, General Services Administration has attacked the problem of surplus time utilization through its program known as the National Government-Wide ADP Sharing Exchange Program.[16]

Beginning June 30, 1965, this agency will seek to have over 500,000 hours of federal computer time used by other agencies. This half-million hours that now appears wasted comprises nearly 60 per cent of what currently costs the government $1.1 billion. Out of 810,000 possible hours, only 310,000 hours are actually being used.[17] However, this is not a true picture because often a computer is not being operated because it is being prepared for the next job. A centralized processing/storage arrangement as outlined above would reduce this waste.

Some of this time is wasted on custom-built hardware; a computer may be built to operate one weapons system only. Between wars and tests there is little for this machine to do. Yet it would not be logical to have such specialized systems running payrolls and performing other routine tasks, in case they were needed instantly.

Another waste results from the fact that a great deal of "non-prime" time is available. While computers do not sleep, men do. Most EDP personnel can find work during

---

[16]General Services Administration, The Government-Wide ADP Sharing Exchange Program, op. cit.

[17]Ibid., p. 2.

the day, and thus they do not work at night. Training and research-and-development personnel could utilize this evening time on the computers.

Even though it appears that much time is wasted, the problem is not as great as would be imagined. General Services Administration hopes through its new program to utilize any of this time that can be salvaged. The non-prime time of both government and non-government computers represents a considerable loss of national resources.

Basically, the overview of the Federal EDP efforts lacks good definition. The broad definition is not well drawn: lesser problems are also ill defined. For example, there are no general guidelines for the different complexity of problems.

The computer is excellent for solving problems of high complexity, which have many constants and variables. But the greatest number of administrative problems are characterized by low complexity, having a limited type of constants and variables. Instead of a count of hardware by type, there is a need for a census of problems by type. Then the proper hardware array can be developed to match this need. The present solution is something of a "shotgun therapy" approach to a problem that can be identified.

In the present overview the man portion of the man/machine compromise is not clearly defined. The basic reason for this inadequacy can probably be deduced from the nature

of the agencies charged with development of the overview. The Bureau of the Budget and the General Accounting Office, while having management systems responsibility, have traditionally focused on the cost aspect of management rather than on the mechanism of improved management.

Federal Agency Applications

The management of the hardware portion of the Federal agency activities of EDP can be summarized. The Bureau of the Budget has taken as its prime role that of review, approval, and guidance of the hardware environment. The General Services Administration has been involved primarily in the adequate utilization of computer time. The Civil Service Commission has been concerned with the many personnel problems resulting from the machine environment. The National Bureau of Standards, Department of Commerce, has sought to reduce the incompatibility and improve the design of hardware.[18] All of these general efforts are translated through systems development into actual operations in various agencies.

Department of Defense

As indicated by previously cited statistics, the Department of Defense is the biggest user of computers within the Federal establishment. The application of this technology ranges from basic research, applied research,

---

[18] Report to the President, pp. 85-87.

and development to every phase of program execution. It consists of generalized systems for the entire Department of Defense to a highly sophisticated configuration of hardware which operates a single weapons system.

A notable accomplishment in the general category is the Department of Defense supply system. This program is a highly centralized control system as well as an efficient decentralized distribution operation. Approximately a million and a half items are under control in this system. The central control system manages requisitions, records, materiel requests, materiel levels, and fund accounting. The distribution centers or supply depots handle all the administrative processing incurred in storing and shipping of these items. The automation of this entire system is a noteworthy example of the semiautomated organization. The standardization, utilization, and cataloging represent a total system of speed, accuracy, and volume which would stagger the average public administrator.[19] This agency has pioneered the inventory-management data operation based on a standard requisitioning and issue procedure (MILSTRIP). None of this would have been possible without EDP.[20]

Other programs of special interest to administrators because of their impact on decision-making are the war-gaming

---

[19]Committee on Post Office and Civil Service, op. cit., pp. 58-62.

[20]Ibid., p. 61.

models. The Joint Chiefs of Staff have a broad computerized war-gaming system, TEMPER, which seeks to apply a full range of all the technical, economic, military, and political factors into an international war game that concerns all the countries in the world. This is, of course, a simulation study whose predictions are valuable but not extremely accurate. It does help to define the factors of the very complicated problems.

The Air Force, in its system called STAGE (Simulation of Total Atomic Global Exchange), can simulate a two-sided world-wide atomic war. It lists all the possible chance interactions, computes aerial refueling requirements, and schedules tanker sorties. Detailed sorties of all weapons systems have also been planned. This allows the "players" to concentrate on planning and evaluating offensive strikes rather than on calculating and bookkeeping.[21]

Over 70 per cent of the total computer time is used for management and administrative applications in the Department of Defense, while 20 per cent is used in research-and-development efforts.[22]

National Aeronautics and Space Administration

The two civilian agencies devoted to scientific tasks

---

[21] Ibid., pp. 62-64.

[22] Ibid., p. 2.

of magnitude are the Atomic Energy Commission and the National Aeronautics and Space Administration. The practices of the AEC are not commonly known because of the restrictive nature of its mission; however, in 1963, NASA had 118 computer systems, of which 11 computers (both full- and part-time) were being used for administrative practices.[23] For an agency of such advanced scientific EDP talent, NASA's administrative EDP efforts have been far from spectacular, as evidenced by administrative efforts at the Manned Spacecraft Center, Houston, Texas. Many of the reports at this location in April, 1963, were mere tabulations.[24] This comparison of the more experienced Department of Defense EDP effort and the younger NASA effort shows a tendency toward improved administrative systems as the system ages.

Internal Revenue Service

The Internal Revenue Service, Department of the Treasury, is well known for its EDP efforts. It is an excellent example of the field/central office relationship in high-volume EDP. The system is divided into three parts. The District Office is responsible for the receipt of the manual source data-returns and remittances. The Service Center is responsible for converting the source data to

---

[23] Ibid., p. 3.

[24] Publication of the Computation and Data Reduction Division, Management Computer Application Branch (Houston, Texas: Manned Spacecraft Center, April, 1963).

machine language as well as for editing and arithmetic auditing. The National Computer Center at Martinsburg, West Virginia, with a staff of only 175 to 200 employees, will ultimately update taxpayers' records by assembling all the information on one taxpayer at one place, receiving its information on magnetic tape and generating magnetic tape. This output tape will enable the Regional Service Centers to produce the printed delinquency output, which is sent to the delinquent taxpayer in the name of the District Office.[25] This system is an excellent example of the probable form of the future public organization. The field offices will be responsible for the input/output information, while the central facilities will be primarily responsible for the handling of data. The central facility is an example of an automated organization.

These examples have shown the value of EDP to the Federal establishment. The Department of Agriculture; Health, Education, and Welfare; Post Office; the Veterans Administration; and others are important users of EDP. The technique is permeating the executive branch.[26]

The Legislative Branch

Congress' use of the computer is limited to utilization of staff and hardware of agencies interacting with

---

[25]Committee on Post Office and Civil Service, op. cit., pp. 49-57.

[26]Ibid., p. 29.

committees. The Congress does not possess an over-all computer system. There is interest in this area and extensive hearings were directed toward such an effort, but no complete definition of need has yet been drawn.[27] Installation of a computer system would probably have the beneficial result of returning Congress to its place of initiation of general policy from its present position of "seconding the motion" of the executive in public matters.

Internally, Congress generally lacks definition of its needs in computer uses. Since the members of Congress operate independent administrative units both as to personal and committee staffs, there is a need for improved systems at this level.

The computer offers the Congressman an excellent tool for statistical and clerical assistance. The legislative branch could audit its data through the General Accounting Office, manipulate it as desired, and construct problem-solution forms as rational as the executive branch without the prejudice which currently exists. It would not be necessary to duplicate all the systems of the executive; therefore, the cost would not be great. A systems person as an administrative assistant to each committee would be a valuable adjunct to the present system.

---

[27]U.S., Congress, Senate, Joint Committee on the Organization of the Congress, 89th Cong., 2d Sess., 1966, Gen. Rept. 948, p. 23.

The volume of clerical response required of the individual Congressman is ever increasing. Mechanical signature machines as well as automated typing systems have been installed; however, over-all automated administrative systems have not been developed for the use of Congressmen. Most have some system of priority of work, but a manual "log" of this nature is prone to error and usually does not include a suspense item follow-up. In many instances the Congressman represents his constituents before executive agencies through correspondence. Suspending and following up such correspond- is difficult and time consuming. A simple time control could be developed to aid every member of Congress on a daily confidential basis. Many other systems applications could be developed, but they must await a proper systems approach to the problem.

Why has Congress failed to evolve as an equal body to the executive? From a systems point of view there are many reasons for this failure. First, Congress does not have a basic characteristic of internal change. In design and practice the system is built on seniority. Key positions of leadership are dominated by the long-termers in the seniority system.[28]

By definition a system is an organization of regulated interaction. The word "regulated" is important; it

---

[28]William J. Keefe and Morris S. Ogul, The American Legislative Process, Congress and the States (Englewood Cliffs, N. J.: Prentice-Hall, Inc., 1964), p. 165.

implies restriction. Each system by its own definition sets up certain limits to the organized interactions. These limits can violate the basic principles of a good system and work as a dysfunction. In the case of Congress the restriction of seniority acts as a deterrent to internal system change. The seniority system operates to block increased competence of the members of Congress. While the executive branch has been in a state of evolutionary change in the twentieth century, the Legislative Reorganization Act of 1946 represents the only major "bloodless" effort on the part of Congress for internal change.[29] This act represents a compromise between the reformers and the leaders. Any change that would increase the competence of the members of Congress would have a definite effect on the leadership. The outcome could be a realignment of the internal hierarchy. The Congressional leaders are like ancient military archers at the time of the invention of gunpowder. If they adopt new techniques, they are not guaranteed that their skill will be needed in the new order; however, if they do not adopt these new techniques, they will stand to lose every battle with the gunpowder users of the executive branch. The horns of this dilemma are indeed sharp. Finally, the fact that the majority of Congressmen are lawyers only adds to their reluctance to use an alien technology.

---

[29] Ibid., p. 455.

It is widely, though questionably, held that there is some diabolical plot on the part of the executive branch to take over the government. The ascendency of the executive is basically caused by the improved systems of this branch. Since Congress is in the position of conservator, its role should be that of the true conservative. It should not be against change per se but rather in favor of orderly, well-defined change. The conservatives of this country would do well to obtain the computerized techniques of change in order to challenge the ill-defined forms and contents of the problems that the more liberal seek to solve. As a political technique the computer is neutral. It can be used to show how irrational programs based on "muddling through" decisions are squandering the resources of this country today as the pork barrel squandered the public domain in the nineteenth century. It can be used just as effectively to apply today's resources in solving the multifaceted problems presented by progressive groups. The computer has no political affiliation. It can make Congress more competent; the question is whether Congress will allow such an internal systems change. The political scientist would welcome such competence, since items like roll-call information can be subjected to mathematical analysis.[30]

---

[30]Oliver Benson, "The Use of Mathematics," loc. cit., p. 37.

The Judicial Branch

The Federal judiciary, like the law profession, is only incidentally involved in computer technology. The Supreme Court will possibly benefit from present and future jurimetrics experimentation. At present the involvement has concerned behavioral studies of the Court.[31]

The problem of effecting a change in the Supreme Court is not easy when such a change involves a revision of the philosophic attitude of the Court. Administrative changes have not been frequent but have been readily achieved. Article III of the Constitution of the United States is a tribute to the excellent systems ability of 1787. Continually improved methodology could enhance this original design.

Summary

The Federal EDP efforts point to many inadequacies; one of the most prevalent is the failure of the public administrator to become involved in the man/machine problems. The Report to the President phrased the problem as follows:

> Experience in the Government and in industry has demonstrated the urgent need for management to concern itself intimately with ADP activities. Because ADP is based on a new technology whose most visible manifestation is equipment of an esoteric nature, there has been

---

[31]See Fred Kort, "Predicting Supreme Court Decisions Mathematically: A Quantitative Analysis of the 'Right to Counsel Cases,'" American Political Science Review, LI (Mar., 1957), p. 51; Glendon Schubert, "Judicial Attitudes and Voting Behavior: The 1961 Term of the United States Supreme Court," Law and Contemporary Problems, XXVIII (Winter, 1963), p. 100.

> a tendency to regard it as the particular responsibility of the technician. ADP applications, from the simplest to the most complex, raise problems and require decisions that are the direct responsibility of managers themselves. ADP may have a pronounced effect upon organizational arrangements, the kind of work employees perform, the conditions under which they work, or the type of skills required. Furthermore, ADP can have an effect not only upon the means and cost of providing service to the public, but also upon the kind of service provided. ADP applications that are primarily designed to provide information can have a significant effect upon the way a manager makes decisions and upon the control he exercises over his organization.[32]

The Federal government, in order to achieve better results, should devote as many resources to the solving of man's problems of interaction with machines as on hardware research.

---

[32]Bureau of the Budget, op. cit., p. 4.

CHAPTER VII

AUTOMATION IN STATE AND LOCAL ADMINISTRATION

The national government does not exist in isolation from lower levels of government. In a federal system, power is divided between a central government and subdivisional governments.[1] While spheres of authority for the national and state governments exist, these levels still interact. Some computer applications concern this Federal area. Levels of government, like branches of government, cannot be defined absolutely; nevertheless, for general classification these divisions can be used.

Federal Applications

One obvious area of interest to both national and state levels is the election system, which is often defined by states and interpreted by the national judiciary. On March 26, 1962, the Supreme Court ruled that it had the authority to hear state apportionment cases and that the Fourth Amendment requires apportionment to be based on

---

[1]Jack C. Plano and Milton Greenberg, The American Political Dictionary (New York: Holt, Rinehart & Winston, 1962), p. 30.

population.[2] This squarely puts mathematics into the problem of reapportionment. Some of the constants have not been defined; for example, does the population requirement mean division according to residents, voters, or citizens?

Stuart Nagel, a University of Illinois political scientist, uses Census Bureau tapes to produce all the various combinations of population. An electronic graphic recorder is capable of drawing such a map in seconds, with less than one per cent error.[3] Several states have sought to use this technique, and the Ford Foundation has granted $915,000 to the National Municipal League for further study.

An answer to the problem has not been reached because as yet the problem is ill defined. This introduces the possibility of utilization of computers in quasi-rational situations. Lindblom's "successive limited comparison" is such a situation.[4] Quite often it is difficult to get the answer because of an ill defined problem. The computer can help in this situation by indicating all the possible answers. The differences between these answers can usually be determined. Considering these facts, a new definition can be made.

The Supreme Court has declared that reapportionment

---

[2]Baker v. Carr, 82 S. Ct. 691 (1962).

[3]Public Automation, I, No. 5 (1965), p. 1.

[4]Lindblom, op. cit., p. 81.

is not a political question, yet it has not sufficiently defined the problem to avoid some political answers.

Other aspects of voting are receiving computer attention. Voting machines have been used in the United States for most of this century. These devices are usually electrical/mechanical devices. Only recently have electronic voting machines been developed. One major reason is the specific nature of state law with regard to balloting. Many votes are still counted in the manner familiar to Julius Caesar--four vertical hash marks and one horizontal. The design of an electronic voting system of high fidelity and security is a simple matter. Having the system accepted into law is the difficulty.

The computer may be used in the prediction of election results as well in the analysis of voting data. The Bureau of Government Research at the University of Oklahoma, under the leadership of Oliver Benson, is continuing the work on election data pioneered by Cortez A. M. Ewing.[5]

As can be seen, the Federal relationship with the state may use computer techniques. The Federal relationship with local government, particularly the cities, has not been defined definitely in computer parameters; however, the relationship offers many possibilities of "creative federalism." The cities could be the source data supply for information necessary for Federal program-planning of a

---

[5]Benson, "The Use of Mathematics," loc. cit., p. 36.

general and specific nature. Finally, the encroachment of the Federal executive--if encroachment it actually is--is not a diabolical plot. Instead, it is plain to the systems analyst that the state systems are much less efficient than the Federal government. The Federal taxation methodology is highly efficient. It cannot compare with the methodology of state government, which is similar to that used by St. Matthew. The Federal executive agencies are constantly evolving into more efficient forms. The states have internal change mechanisms, which could be described as too liberal if the number of amendments were counted. A more consistent systems argument would hold that the mechanism is not so much in error as the poor total system design which requires the great number of changes. The states in their constitutional format have emulated the Federal government, but by their nature states are different from the Federal establishment. As the states prove their inefficiency, individual citizens and groups look to the Federal government for solutions to existing and emerging problems, such as welfare, education, and highway problems.

State Applications

Executive

The fragmentation of power in the states has led to the weak position of the governor; this has significance in the problem of dispersal of hardware among quasi-independent

or totally independent state agencies as opposed to centralization of hardware. In many ways a centralized system holds much promise for states. From a hardware point of view, economy is on the side of centralization. From the software angle, the use of generalized procedures can enhance the speed and degree of automation as well as the quality of output. Fite has introduced a counterargument--the facts-of-life point of view. To impose automation in state affairs is a problem of tremendous traumatic effect. To use a medical analogy, the surgical risk of proposing automation on a centralized basis is of such magnitude that the operation could be a success but the patient might survive in a completely changed form.[6] The medical analogy is consistent with what Reilly calls "Organism Management," a system for "decisions--capable information."[7] "Organism Management" fits the Federal government because policy-makers have legal authority to act; however, state officials in high executive position often do not have this authority.

Hearle and Mason sought to solve this problem of centralization through what they call a "unified information system."[8] The difference between this system and the type

---

[6]Harry H. Fite, "Administrative Evolution in ADP in State Government," Public Administration Review, XXI, No. 1 (Winter, 1961), p. 3.

[7]Frank W. Reilly, "Policy Decisions and EDP Systems in the Federal Government," Public Administration Review, XXII, No. 2 (September, 1962), p. 132.

[8]Hearle and Mason, op. cit., p. 49.

of centralization referred to by Fite is that the unified system centralizes information in a central storage but does not require centralized management. In other words, data is stored like information in a library and can be "checked out" by an agency or person authorized to do so. The input/output functions are still in the hands of the agency.[9] Such a system would have the ingredients for general or specific decision-making. This system is aimed at the 1970-75 time period. The data-bank idea, the master file of information concept, seems to have more appeal for urban areas than for state governments.[10] The technique does show how an EDP system can be functionally divided to achieve efficiency, even in a decentralized management environment.

The centralization versus decentralization of the hardware environment has not been settled. Centralization because of economy seems to be gaining ground in Oregon, Utah, Illinois, West Virginia, and Louisiana.[11]

California is considering integrating all the city, county, and state hardware into one system designed by the Lockheed Corporation. A unified hardware system would be used to match the unified software databank concept. Such a

---

[9]Edward F. R. Hearle, "A Data Processing System for State and Local Governments," Public Administrative Review, XXII, No. 3 (September, 1962), p. 151.

[10]John K. Parker, "Operating a City Databank," Public Automation "Output," I, No. 1 (June, 1965).

[11]"State ADP Centralization," Public Automation, I, No. 7 (December, 1965), p. 2.

system could mean a saving of $400 million a year in fifteen years.[12]

The answer probably lies in a compromise of the two positions as technology increases the capacity, lowers the cost, and assumes more functional modularity. The input/output functions will be decentralized while the handling of data (processing and storing) will be centralized.[13]

One point of agreement is in the importance of executive support, a point emphasized earlier in Federal experience. The governor and top state executives must be concerned with EDP if it is to be effective.

Kennedy specifies the importance of the governor in this effort:

> In Illinois we have learned that the first step in establishing a management information system is to gain the support of the governor. He must grasp fully the benefits of a planned and managed information system, recognize that traditional lines of authority must be crossed to make the system work properly and efficiently, and support the concept of control at the very top of the executive system.[14]

Fields echoes these words as they apply to the experience of Pennsylvania executives:

> In retrospect, it seems that had greater emphasis been placed on orientation of cabinet secretaries,

---

[12] Ibid.

[13] Edward F. R. Hearle, "Alternate Approaches to Data System Design for State and Local Systems," Proceedings of the Conference on EDP Systems for State and Local Government (New York: System Development Corp., 1964), p. 112.

[14] John A. Kennedy, "A Legislator Views ADP in State Government," Public Automation "Output," I, No. 5 (October, 1965).

> deputy secretaries, and bureau directors--the top-ranking echelons of state administration--the entire program would have had smoother sailing.[15]

EDP could have a marked effect not only on the efficiency of state administration but also upon the effectiveness of the higher echelon of state officials. This can be done through the present structure in inter-agency or intra-agency application.

While almost all state agencies have some feasible computer application, the states' responsibilities in education are becoming increasingly automated. Many professional groups have evolved to meet this need, including the Association for Educational Data Systems, Educational Systems Corporation, and the Committee on Educational Data Systems of the Council of Chief State School Officers.

The state of Florida is a good example of state educational programs. Typical output includes:

1. A standards check that includes 1,800 criteria for every school in the state.
2. Instructional program deficiencies.
3. Instructional program inconsistencies between computer analyses and principals' evaluation.
4. A list of professionally unqualified teachers.
5. A list of teachers by course.

---

[15]Barton A. Fields, "Introducing Continuous Change in Pennsylvania," Public Administrative Review, XXII, No. 3 (September, 1962), p. 136.

6. A list of class size and courses.[16]

Legislative

State legislatures have become involved in EDP efforts. Their interests are quite often financial. The Ohio legislature through its finance committee uses a computer to reproduce a new budget incorporating each change made each day by committee action. This revised budget is in the hands of the committee members each day. The output production of 2,500 lines takes less than 5 minutes' computer time.[17]

The recommendation of the Data Processing Study Committee of the state of Texas was that a proposed systems service organization could be under the executive or legislative branch.[18] If the legislature did gain control of the systems development, the result could be a further weakening of the administrative responsibility of the governor. This would put the EDP efforts under the Texas state auditor, a legislative employee, in much the same manner as if the comptroller general controlled all Federal EDP efforts.

William C. Walsh, Director, Bureau of Electronic

---

[16]Robert Gates, "Educational Systems," Proceedings of the Conference on EDP Systems for State and Local Government (New York: System Development Corp., 1964), p. 88.

[17]Public Automation, I, No. 1 (June, 1965), p. 1.

[18]Orus M. Mooney, "Automatic Data Processing in the State Government of Texas," Proceedings of the Conference on EDP Systems for State and Local Government (New York: System Development Corporation, 1964), p. 153.

Data Processing, Department of Taxation and Finance, state of New York, is of the opinion that fiscal accounting is the sine qua non of EDP in state governments. Without EDP state taxation agencies cannot, at this time or in the future, cope with the mass of paper in tax administration. For accuracy and reliability of results the computer is a must in state tax administration. In addition, the need for tax information by many other state agencies and possibly by the Internal Revenue Service will increase this burden.[19] As legislatures face more and more fiscal problems, the use of state taxation records will become the basis of program-planning by legislatures.

From this discussion it is apparent that state legislatures will be confronted by computers in their fiscal management of states. A comprehensive study of this relationship is sorely needed.

Judicial

There are at present no state-wide legal systems of administration. The state of Hawaii has used a card system since 1961 to record filing and disposition of every case for statistical purposes.[20] Like the Federal judiciary, the state systems are mostly manual. If James Madison were

---

[19] Ibid., p. 31.

[20] Eldridge Adams, "EDP Aid to the Courts," Proceedings of the Conference on EDP Systems for State and Local Government, p. 18.

suddenly thrust back into twentieth-century state government, he would probably feel more at home in the state judiciary because of their lack of innovation since his day and time.

State judicial experts are becoming aware of the fact that state agencies with EDP have an advantage over the common litigant or agency without EDP.[21] The epistemology of our legal system is based on the adversary process of trial. If a balance of resources of litigants is required, then the defense attorneys will in the future be as interested in systems as are the state-employed attorneys.

EDP will have its effect on the practice of law in the states, but its real contribution will be in administration of legal systems as well as in law enforcement.

The application of computers to state problems is a foregone conclusion. The question is whether the present state organization will allow automation. If it does not, then more and more problems will be defined and solved on a national basis. If states do automate administratively, there is no doubt that change will occur, and, hopefully, states will be able to take a more effective role in the affairs of this country.

---

[21] Ibid., p. 21.

Local Applications

Executive and Legislative

One key to the automation of state agencies is the degree of urbanization. This is seen in the amount of automation in New York and California. The standard metropolitan areas are located throughout the country; however, there is a concentration of these areas on the East and West Coasts. In between there are islands of urbanism in a rural sea. These rural areas are characterized by the lack of services of professional public administrators; consequently, there is an unprofessional, dilettante approach to the defining and solving of problems. Counties, as they interact with the state, have systems and procedures that are carefully defined by the state.[22] Urbanization has increased the number of functions of many counties through special legislation.[23] The automation of urban counties has proceeded in the standard metropolitan areas. In fact, the growth of a metropolitan area may be due to its ability to define and solve problems.

The cities themselves have been successful in utilization of the computer. The effect of improved information can be seen in the changing role of the city manager in the

---

[22]Hearle and Mason, op. cit., p. 17.

[23]Ibid.

manager/council type of city government.[24] This change is often apparent in the involvement of city managers in areas of policy.[25] This is due to the improved quality and quantity of facts. Facts and value could be debated in former times; today the improved information is hard to dispute, and values have been rationally defined. This does not mean that there is less democracy; it means better democracy. Elected representatives can make better decisions because consequences can be better judged by using high-fidelity data.[26] It is at the point of decision that the public administrator sees the interaction of his administrative, political, and behavioral responses. The city manager's contribution is his expertise and excellent data. It is easy to see that the urban/city government is evolving into a more efficient form, a rational administration subject to the democratic will of the people expressed through their representatives.

City automation has begun usually in ad hoc applications centered around fiscal matters. Budget-making and taxation data are ever increasing in quantity. The city of Fort Worth, Texas, for example, had a 400 per cent increase

---

[24]Duane Lockard, "The City Manager, Administrative Theory and Political Power," Political Science Quarterly, LXXVII, No. 2 (June, 1962), p. 224.

[25]C. A. Harrell and D. G. Weiford, "The City Manager and the Policy Process," Public Administration Review, XIX (Winter, 1959), p. 103.

[26]Ibid., pp. 104-106.

in budget transactions from 1959 to 1962.[27]

Computerized budget-making is usually a by-product of applications pertaining to utility billing, tax collection, and payrolls. Other feasible applications are vehicle accounting and control; traffic, street, and utility engineering; and statistical data on all departments.[28] Automated administrative systems are not found in completed form in American cities. The most common innovation at this time is the data-bank concept. This idea is the basis of Hearle and Mason's unified system.[29] While the authors characterize their system as a centralized storage for both urban and state governments, the system in definition and practice seems to be more applicable to cities.

A data bank is designed to provide management information in a centralized location having a variety of data which is usually part of a production system.[30] The recovery of this data is expedited by simple processing procedures which up to now have been tabulations of certain items having common characteristics. The retrieval of this information is based on the profile or parameters of that which is desirable. In addition to the retrieval programs, the system

---

[27]Ted R. Morris, "Fort Worth's Automated Budget," Public Automation "Output," I, No. 7 (December, 1965).

[28]Ibid.

[29]Hearle and Mason, op. cit.

[30]Parker, op. cit.

has file creation and maintenance routines for changing and updating information.[31]

This technique was the basis of the Metropolitan Data Center financed as a Demonstration Grant Program of the Urban Renewal Administration, Housing and Home Finance Agency. The participants in the program were The Planning Office of the City and County of Denver, Colorado; The Planning Department of the City of Fort Worth, Texas; The Metropolitan Area Planning Commission of Pulaski County, Little Rock, Arkansas; and The Tulsa Metropolitan Area Planning Commission, Tulsa, Oklahoma.[32] The justification of the project was to achieve economy by avoiding duplication and to facilitate improvements of methods and techniques. The specific goals were listed as follows:

1. A magnetic tape file of property parcel records containing data desired by each agency, including storage capacity of all "common" data desired by two or more agencies.

2. A computer program for the IBM 1401 for creating and updating the basic parcel file.

3. A generalized computer retrieval program for the IBM 1401 computer to extract and present data in any specified form and/or combination.

4. An actual demonstration in each agency (except Wichita) of the following steps:
   (a) Identify data needed for specified activities and assemble these data for parcels comprising a specified area of the city.

---

[31] Ibid.

[32] Demonstration Project Number Oklahoma D-13, Housing and Home Finance Agency, under provisions of Section 314 of the Housing Act, 1954.

(b) Enter these data into the parcel file.
(c) Establish a system for maintaining the data current, with appropriate arrangements with various departments.
(d) Test the systems and procedures which cause the data to flow into the center, and
(e) Test the retrieval program to determine that it satisfied planning data needs.

5. The development, by the Wichita-Sedgwick County Metropolitan Area Planning Commission, of a program for the IBM 1401 computer to assist in analyzing community requirements.[33]

Specific results to meet these goals by the agencies were detailed as follows:

DENVER

1. Tabulate by parcel number, parcel area, assembly number, current zoning and zone area for all test areas.

2. List multi-family residential parcels of land having a building density floor area ratio range of 1.1 to 1.6, and lot coverage of at least 50%. Indicate by parcel number and address; the year built, number of dwelling units, current zoning, parcel area, gross floor area, first floor area, and number of parking spaces for each parcel selected.

3. Tabulate population and dwelling unit figures, by census block for census tracts 27C and 38.

4. Tabulate all parcels sold during 1960-62 by date of sale, planning unit, and current zoning classification. List the parcel number and address, sale price, and the total assessed property value of each parcel sold.

5. Tabulate off-street parking spaces in commercial areas, by commercial zone district. List the parcel number, parcel area, gross building floor area, and the number of employee and customer parking spaces.

6. List valuation and structure data for properties located on a proposed freeway routing by parcel number, improvement, personal property and total

---

[33] Ibid., p. 16.

assessed values, year built, building location code, building condition, predominant land use, and the number of dwelling units for all parcels located within the proposed route.

7. List parcels on which an application for a change in zoning has been made, and list for each parcel, parcel address, land value, improvement value, total value, parcel area, gross floor area, year built, number of dwelling units, number of residents, space use code, and floor space utilized for each use.

8. Describe the area within a given radius of the property under consideration in the zoning application in number 7 above. Sort parcels by zone classification and parcel, listing parcel address, land value, improvement value, total value, zone area, gross floor area, year built, number of dwelling units, number of residents, and land use code.

FORT WORTH

1. For the Downtown Association: tabulate the addresses of vacant retail structures for firms being removed from the Convention Center area, showing net floor space available.

2. For the Chamber of Commerce: tabulate for a given area, data on structure (condition, area, number of floors, floor area, and value) and for land (area and value).

3. For the Regional Transportation Study (State Highway Department): tabulate by building: net floor space for each establishment, space use, establishment name, employment; also, tabulate building condition and area, and parking stalls.

4. For the Police Department (Selective Enforcement): list establishment location, and floor area of all taverns in the Central Business District.

LITTLE ROCK

1. List all school parcels in Census Tract 33, including area of each parcel and year the building was constructed.

2. Tabulate the total number of dwelling units and the number of building permits issued since 1963 in Census Tract 33.

3. List all multi-family parcels in Census Tract 33.

4. List all parcels that are zoned for commercial use and all parcels being used commercially. Tabulate the area in square feet and the total appraised value of each parcel.

5. List all retail and personal service parcels in Census Tract 33.

6. List all single family dwellings built in 1957 or later, having a total appraised value of $20,000 or more in Census Tract 33.

7. List all parcels located on Pike Avenue between 4th Street and 27th Street, giving the appraised value of each parcel.

TULSA

1. List the number of families living in standard structures within the test area.

2. Tabulate the zoning area by zoning classification and land use within the test area.

3. List the number of structures selected for rehabilitation within each urban renewal test project area.

4. Tabulate the proposed crosstown expressway land area and total assessed value.

5. List the number of industrial firms with five employees or more.

6. List the number of dwelling units by building condition within Community Renewal Project areas 12, 13, and 15.

7. Tabulate the amount of floor space utilized, number of employees and number of off-street parking spaces for all shopping centers and districts.

8. Tabulate the number of dwelling units to be displaced by maximum renewal action.

9. For the Tulsa County Assessor: list any parcel and street address, the names of individual property owners, the land value, improvements value, and tax exempt status.

10. For the Tulsa Police Department: list the number of crimes committed within the MDC test area during the

month of August, by type of crime, address, time and case number. (Special data added to the file.)

11. For the Tulsa Traffic Engineering Department: list the number of accidents by type, time, weather condition, date, location, and description of damage. (Special data added to file.)

12. For the Tulsa City-County Library System: list the number of books on loan, type of reading material, account status by name, address and account number within the MDC test areas. (Special data added to file.)

13. For the Webster Telephone Exchange Area: tabulate the total number of dwelling units by block within the Webster telephone exchange area.

14. For the Multilist Service of Tulsa Realtors, Inc.: list by planning area and parcel number, the sales price, sales date, and total assessed value of all parcels.

15. Tabulate the total number of employees, floor space utilized, dwelling units, and attributable parcel acreage by space use code.

16. List the number of dwelling units by building condition within the test area.

17. List buildings which contain mixed land uses in the MDC test area.

18. Tabulate assessed valuations in community renewal project areas by building condition.

19. Tabulate the total number of buildings and parcel area by space use and building condition.[34]

It is apparent that lists and tabulations make up the entire production of this system. The advantages of such a system are many. A data bank allows the use of EDP by individuals and departments that could not otherwise afford it. Information is more readily available even for routine work. Its excellent historical record is invaluable

---

[34] Ibid., pp. 90-92.

in planning.[35] In fact, the public-planning profession is becoming EDP oriented. The major objection to the Metropolitan Data Center is that there seems to be no method of internal change. It appears that alterations to the system must be made by the consultants.

Second, the data bank is not simple. There is a relationship between input and output but it is not direct. A user has to fill out a form which is checked by an analyst before processing.[36] Finally, the generality of the system suffers from the lack of full processing capability. It appears that tabulation is the major form of output.

One agency of urban government that has found the computer a useful tool is the law-enforcement organization. Chicago, New York, and Los Angeles have information storage and retrieval programs which concern individual criminals and their methods of operation. In many systems stolen vehicle checks can be made almost instantly.[37] New Orleans and other cities are using the computer to stop scofflaw violators, who ignore traffic tickets.[38] The number of non-moving violations or parking tickets has reached 600,000 annually in the District of Columbia. The automation of

---

[35]Parker, op. cit., pp. 2-3.

[36]Ibid.

[37]"Computer vs. Crime," Public Automation, I, No. 1 (June, 1965), p. 2.

[38]"Scofflaws," Public Automation, I, No. 5 (October, 1965), p. 2.

this problem was at first ad hoc and clerical; however, an expanded program of a preventive-administration nature has resulted in control of both moving and non-moving violations.[39]

Judicial

The computer has had a considerable effect upon the legislative and executive functions of local government, particularly in the metropolitan areas. The judicial branch has shown signs of improved administration.

In his article "EDP: Last Hope for the Jury System," Judge Henry Ellenbogen has presented a most progressive court-administrative program. The court in question is the eighth largest court in the nation. In 1963 the backlog in this court was 8,000 cases. Traditional filing techniques resulted in what Ellenbogen called "the lack of a system."[40] The improved system was one of developing an EDP control for these cases. The judge can control the schedule of the court by scheduling the work of those law firms before the bench. This is done by a computer program which matches the work of the firm's trial personnel with those of other firms. Reasons

---

[39]Daniel A. Walton, "Concept and Operation of the Central Violations Bureau in Law Enforcement," Proceedings of the Conference on EDP Systems for State and Local Government (New York: System Development Corp., 1964), p. 23.

[40]Henry Ellenbogen, "EDP: Last Hope for the Jury System," Proceedings of the Conference on EDP Systems for State and Local Government (New York: System Development Corp., 1964), p. 26.

for request of delay must be given under oath. Speedy justice has flowed in controlled volume since the system went into operation. The number of cases disposed of in the first six months of 1964 was nearly twice that of the previous year. This system is now disposing of three times as many cases as are being filed. A backlog in the judiciary should soon be intolerable. The statistical by-product of this system gives ample evidence of being a high-fidelity planning information source. Ellenbogen is very optimistic. He sees a better day as legal red tape is conquered, but more important, he shows that the survival of the jury system may depend on automation.[41] This further indicates that EDP is not a destroyer of manual systems of value but rather a conservator that could enhance any desirable present system. Automation could possibly permeate the entire field of law, which could mean the survival of the profession.

Summary

While the dedication of the Federal government to EDP is greater than that at the state and local levels, their problems are similar. There is a general lack of research in man-to-machine communication, a critical factor at the top hierarchical level. It is also apparent that the level or branch of government that develops EDP problem-solving techniques has an advantage over those units that do

---

[41] Ibid., pp. 26-29.

not. There is a general lack of theory about problem-solving, data-processing, the nature of administrative problems, and administrative-problem solution forms.

As a problem-solver, data-processing is concerned with the arrayment and the decisions to array data. Scientific problems are often concerned with a low volume of input, precise manipulations of high complexity, and frequent, well-defined interactions of problem elements; whereas administrative problems are characterized by high volume of input, imprecise manipulations of low complexity, and infrequent, often ill-defined interactions of problem elements. Scientific problem forms do not always fit administrative situations; therefore, a computer language oriented to public-administrative problems would be highly desirable.

Problem- and procedure-oriented languages are increasing in utilization. A language for governmental use should have the desirable characteristics of a good system (anthropocentricism, flexibility, generality, and simplicity). An administrative user should be able to write the instructions in English, using variable syntax. The system should be able to be changed internally for macro or micro instructions. The language should begin as a generic language that can be modified to meet most administrative problems. Finally, the user should be able to write a program in such a way that there is a direct relationship between input and output. Sometimes the utilization of an intermediate or

refined form of data can be used in place of the original source data.

Project SPUR for 1966 is conducting research and development leading to such a language. It is too early to determine if such a difficult problem can be solved; however, progress is being made and results will soon be reported.

Definite plans should be made at all levels of government for a total system approach using standardized software and hardware. Until such plans are drawn and executed, the potential value of EDP will not be realized.

CHAPTER VIII

CONCLUSION

Automation is a desirable state for public affairs; it is a continuum of scientific management. This country can ill afford to continue to waste its treasure or intelligence on irrational manual systems. To achieve the transformation will not be easy. Long-range planning that involves both hardware and software aspects of the total Federal, state, and local systems is necessary and overdue.

Hardware

The hardware issue could be resolved by having an agency such as the General Services Administration develop a plan for the centralization of data-handling capabilities. Centralized storage and data manipulation could be arranged regionally throughout the country. Standardization of basic units should be adopted to allow competitive bidding from any qualified manufacturer. The functional units should be so defined as to avoid obsolescence. These installations, which would be Regional Data Handling Centers, could be under the General Services Administration or controlled by special nonprofit organizations. All Federal

agencies would utilize these facilities. The surplus time could be made available to lower levels of government as well as to nonprofit and educational institutions. In fact, these organizations should be urged to become users. These centers could be interrelated on the Federal Telephone Service network.

The input/output hardware could be located in and be under the supervision of the using agency. The specifications of this hardware would need standardization as well as functional modularity to ensure against obsolescence. The entire system should seek a level of integrity in fidelity and security of data.

Software

The development of hardware will probably continue to be ad hoc and preventive. What is needed is an encouragement to the rationally predictive techniques.

The Defense Department has given us two examples of system-development management. The Navy has used the in-house system development, while the Air Force has created nonprofit organizations for the management of its systems development. The Air Force has been subjected to criticism regarding the viability of these outside management techniques.[1] The Air Force claims that its nonprofit organizations like Aerospace

---

[1]U. S. Congress, House, Subcommittee for Special Investigations of the Committee on Armed Services, The Aerospace Corporation, A Study of Fiscal and Management Policy and Control, 89th Cong., 1st Sess., 1965, p. 61.

Corporation and MITRE Corporation are less costly in the long run than private industry; this point should be further investigated. If nonprofit institutions are considered best, then these organizations should be established throughout the country to aid all levels of government. These regional centers of research could be directed by a Special Office or Council of Systems under the President. By using nonprofit organizations, the Federal salary scale could be avoided for qualified public-information executives. In fact, a professional association of such qualified public-information administrators would go far to proliferate management information. Other in-house, educational, profit, and nonprofit forms of software development should be encouraged.

The duties of these organizations should be basic and applied research, development, and evaluation of public EDP systems.

Another function would be to establish a rapport with all other organizations working toward these goals. Facilities should be available at these centers for the continuing education of administrative personnel. Prospective public administrators could be given a type of preceptorial training sponsored by these regional research centers with special emphasis upon projects in areas unable to hire professional administrators. The research center would work with the Regional Data Handling Centers to

encourage a national and regional data bank of information from and for the use of all levels of government. The advantages of such a system would be many:

1. The proliferation of research and knowledge about management systems would be assured.
2. Improvement in the quantity and quality of professional administrators would be possible.
3. A focus on problems of a general as well as a specific nature could be accomplished.
4. Creative federalism would be possible, based on high-fidelity data.
5. Expensive duplication of governmental effort would be avoided.
6. Government at all levels could be based on rationality rather than on speculation and conjecture.

As Woodrow Wilson said nearly a hundred years ago, making a Constitution is easier than making one work.[2] The tools are available to revitalize the American democracy and to avoid the irrationality of a decline of civilization. Automation in public administration could lead us, as John Dewey said, from the Great Society to the Great Community.[3]

---

[2]Woodrow Wilson, "The Study of Administration," Political Science Quarterly, II, No. 2 (New York: Ginn & Co., 1887), p. 200.

[3]Dewey, op. cit., 184.

APPENDICES

APPENDIX I

A GLOSSARY OF COMPUTER TERMS

ADP: Automatic data processing; includes electronic and electrical devices.

APPLICATION: the system or problem to which a computer is applied.

ASSEMBLER: a computer program which translates symbolic code into machine code, usually item for item.

AUTOMATION: the implementation of processes by automatic means.

COBOL: common business-oriented language, a computer language.

COMPILER: related to an assembler, except certain items of code initiate several machine codes.

COMPUTER: a machine capable of receiving, processing, and producing information.

CORE STORAGE: related to computer memory, that area in the processing unit capable of receiving and holding data in electronic form.

CYBERNETICS: the field of knowledge involved in the control and communication of machines and nervous systems.

DATA: symbols that denote reference or description, especially numbers.

EAM: electrical accounting machines or tabulating equipment.

EDIT: to rearrange data or information.

EDP: electronic data processing, related to ADP.

FIELD: an assigned area in a record for certain information.

FORTRAN: formula translation, any of several procedure-oriented languages using algebraic notation.

FOSDIC: film optical sensing device for input to computer.

HARDWARE: the physical equipment of a computer system, including peripheral devices, contrasted with software.

HEURISTIC: pertaining to trial-and-error methods of obtaining solutions to problems.

INPUT: information transferred into internal storage.

INSTRUCTION: a set of characters which causes a computer to perform a required operation, usually upon some quantity.

INTERPRET: the act of printing on a punched card the information punched in that card, or the act of translating non-machine language into executable machine language.

I/O: the abbreviation for input/output.

KEYPUNCH: a device to punch holes in a card that has machine-language meaning, or the act of operating such a machine.

LABEL: a name or symbol for an item of data which is occupying a particular location in the computer system.

LANGUAGE: a system for representing and communicating

information or data between people or people/machines.

LINEAR PROGRAMMING: a technique of operations research for solving problems involving many variables where a best value is to be found; not to be confused with computer programming.

LOOP: a repetitive routine that ends when prescribed conditions are met; in a system a "closed" loop is the ability to produce all input necessary for operation of the system.

MATHEMATICAL MODEL: the generalized characteristics of a system expressed in mathematics in such a way that different conditions and their effect on the whole can be determined.

MERGE: to combine items into one sequenced file from other similarly sequenced files.

NANOSECOND: one thousandth of a millionth of a second.

OFF-LINE: peripheral equipment that is not controlled by the central processing unit of a computer.

ON-LINE: peripheral equipment that is controlled by the central processing unit.

OPERAND: the quantity portion of a computer instruction; the object of the instruction action.

OPERATIONAL RESEARCH: the use of analytical and mathematical methods for solving operational problems; also known as OR.

OUTPUT: in computer technology, the results of the manipulation of input data according to plan.

PARAMETER: a quantity whose value specifies the process to be performed.

PARITY CHECK: a summation check of each character handled by a computer to verify validity.

PATCH: the act of inserting additional instructions into a program.

PROBLEM-ORIENTED LANGUAGE: a language designed for convenience of program specification, not for ease of machine code conversion; the how of solution is not the concern of the user.

PROCEDURE-ORIENTED LANGUAGE: language based on how a problem is to be solved.

PROCESS: a general term which concerns computing, sorting, interpreting, etc.

PROGRAM: the opposite of dilettante, a sequential plan to achieve a desired result.

PROGRAMMER: one who prepares computer programs.

PUNCH: to shear a hole that has machine-language meaning in a card; a single hole that has machine-language significance.

QUEUING THEORY: a type of probability theory useful in studying delays or line-ups at servicing points.

RANDOM ACCESS: a process of information storage and retrieval where the time required to store or recover data is not dependent upon the previous operation.

READ: in computer technology, the sensing of information in

machine language.

RECORD: a group of related facts and fields treated as a unit, to put data in a storage media.

ROUTINE: a set of computer instructions arranged in sequence to achieve a given operation.

RUN: the complete operation of one computer program.

SCAN: to examine every item of a record and/or file.

SDA: an abbreviation for Source Data Automation.

SEQUENTIAL ACCESS: the storage and retrieval of data in arbitrarily defined order.

SIMULATION: a representation of a physical system; the computer environment can represent a model of some activity.

SOFTWARE: the totality of programs and routines used to extend the capabilities of computers.

SOURCE DATA AUTOMATION: production of input, particularly every possibility for one program, in machine language, usually as a computer by-product.

STORAGE: a device in which data can be stored, commonly called memory.

SYNTAX: the rules governing sentence structure in a language.

SYSTEM: an assembly of interrelated activities united to form an organized whole.

SYSTEM ANALYSIS: the determination of what must be accomplished and how the necessary operations may best be accomplished.

TRANSLATOR: a program whose input is a sequence of statements in some language and whose output is an equivalent sequence of statements in another language.

UPDATE: the activity of putting current information changes into a master file.

VERIFIER: a device to check characters through retranscription.

APPENDIX II

SYSTEMS CONTROL ALL TASKS--A FINAL REPORT

Any system worth its salt soon is known by an acronym. The public-relations value is not the only reason for such appellation; it is necessary to call the "thing" by something to separate it from its fellow systems. Out of such a need the name of the control system SCAT was born.

The system itself was a typical preventive administration approach in the Accelerated Public Works Program, Community Facilities Administration, Housing Home Finance Agency, Region V. This response developed in the field rather than in the central office; therein lies part of the reason for its successes as well as its failures.

The Housing Home Finance Agency is a conglomerate organization which in 1966 became the Department of Housing and Urban Development. One element of its constituency is the Community Facilities Administration (Branch). CFA is a strata almost of itself. Its programs include Advanced Planning, College Housing, Public Facility Loans, School Construction, Senior Citizen Housing, Area Redevelopment, and Accelerated Public Works. In addition to its

administrative functions, CFA in its Regional Offices has engineering, legal, and financial responses to make in each program. The vehicle is the application bound in a file folder and navigating the processing pipeline. There is also a post-procedure loan-management requirement.

The Accelerated Public Works program provided for grants to eligible public bodies, which included any political subdivisions and instrumentalities of states. These grants could be made for any type of public work which the applicant had legal authority to plan, finance, and construct, except facilities which could be financed by other Federal programs. The primary purpose of the Public Works Accelerated Act was the creation of employment by the construction of public works. The areas designated for tnese grants were areas of substantial unemployment (Department of Labor) or redevelopment areas (Department of Commerce). The amount of grants was rarely 100 per cent.

The purpose of immediate aid was not carried through in program development since the administration of the APW program was patterned after the Public Facilities Loan program. When giving money away, you should not have the same standards as in loaning money. In addition, when these grants were matched with funds from other Federal programs, the processing time for the grant was limited to the speed of the other program. The program established a 120-day requirement from application to on-site employment. After

only a short time it became apparent that the administrative procedures were exceeding this time limit, in spite of extra employees and overtime. The total program as conceived had almost a fatal conflict between purpose and procedures. This problem was compounded with a new staff in each regional office dealing with literally hundreds of applications, which had to be processed by engineering, financial, and legal personnel. The management problems were legion.

Control devices usually do exist, if only as tenuous images in the minds of the managers; most control devices are relatively simple. The APW control device in Region V consisted of a simple columnar pad which recorded some of the progress of each application. Since it was yellow in color, it became known as the "yellow thing." In order to be recorded, all applications passed through a central point. As the volume and pressure increased, this feature became a bottleneck or was easily bypassed. In addition, the number of tasks reported was limited to the width of the pad. The biggest problem was that only one person could use it or post it at a time. Source data flow to the document became uncertain, and its validity suffered. Even if it had been successful, it was an ex post facto status report of little value to line or staff. Finally, any public works program generates Congressional interest; but a grant program really brings on the pressure. The APW operations section became a "fire department" attending almost entirely to

priority items; however, it is well to remember that yesterday's routine becomes today's priority. Of major importance, therefore, was the immediate control of the entire process through controlling each application and each sub-task.

Innovations in control have progressed from the Gantt chart to the PERT and the Critical Path scheduling devices. The latter techniques have been children of the computer revolution. CPM (Critical Path Method) and PERT (Program Evaluation Review Technique) are planning and control techniques that focus managerial attention on key program developmental parts. Both use a network which shows the interrelationship with other tasks, whereas the earlier Gantt chart used bars to indicate this relationship. Not only the events but also the elapsed time were charted in the PERT approach. This technique was developed by the Special Projects Office of the U. S. Navy in the development of the Polaris Weapons System in 1958. Time, in such programs, was of the essence. The program was developed deductively; that is, the results desired were related to necessary sub-tasks until the source requirements of the entire system were defined. Since each sub-task has an elapsed time value, the length of time necessary to complete the entire project is known. A simple formula can be used to estimate the time required for each task. This activity-time formula is based on three estimates. There are the optimistic completion time (a), most likely completion

time (b), and the most pessimistic completion time (c). The most likely time is weighed in the activity-time formula:

$$AT = \frac{a + 4b + c}{6}$$

After this simple little formula is used to determine the time for each event, the information on activities and events can be translated into dates. The critical path is the longest period of time from beginning to end. If delays occur here, the whole project suffers. In complex situations, events can only be sequenced by use of a computer. To finish on time or sooner is the aim of this type of control. It is not unusual to visit a new construction site that is almost bare and hear a construction foreman yelling about being behind schedule. PERT motivates the critical activities to completion. Couple the goal-attainment record with the obvious flexibility, and the critical-path method should be considered by any control-system developer.

The APW problem was considered for PERT application. The obvious goal was the obtainment of on-site construction within the allotted time of 120 days for each successful application. Beginning with this goal, the major subdivisions were traced to receipt of the application. After the completion of on-site construction, post-goal activities were also defined. This sounds simple, but actually people are reluctant to let you know what they are doing. A good approach is for each person to attend a simple training session on PERT, and then to develop his or her own network.

In this way the whole project can be defined. The major tasks were arranged in network format beginning with Application, Grant Offer, Pre-Construction, and Construction. It soon became obvious that the network was almost linear, except where applicant activities and program-personnel activities were going on simultaneously. These large subdivisions became known as stages. Rarely did an application go from the application through the construction period without a delay between these points. Within each stage the activity time was calculated for each individual task; this gave the activity time for each stage.

Here is how it worked: The first stage was the Application Stage, which was made up of Tasks 01-07. The activity time of 01-06 was 5 days each; task 07 was 30 days. If an application was received on October 1 and the formula was applied, the probable completion dates would be Task 01--Oct. 5, Task 02--Oct. 10, Task 03--Oct. 15, Task 04--Oct. 20, Task 05--Oct. 25, Task 06--Oct. 30, and Task 07--Nov. 29.

Deductive analysis indicated that the requirements of the system would be as follows:

1. Provide daily the status of each APW application as of the close of business the preceding day.
2. Show the next task on each project to be undertaken, and a target date for its completion.
3. Show estimated completion dates for each remaining task in the current stage on each project.

4. Show suspense, or follow-up dates for tasks suspended for additional data.
5. Show the work-load of each organizational unit.
6. Show the priority of each application.
7. Indicate the physical location of the file folder.

All of this had to be in a format that could be used by line and staff.

At first a manual design using the PERT system modified as a linear rather than a network presentation was developed. It was almost immediately apparent that such a system could only be maintained using EDP equipment.

To review the problem, the establishment of control was the major criterion. Second, the cost factor was important because no funds were provided. There was no time for a justification, which has to be cleared through the Bureau of the Budget. It was, therefore, decided to develop such a system by borrowing supplies and time from other agencies. This is mentioned as a controlling criterion of the output cost. Beggars must have simple demands.

The first step was to determine the relationship of the results with the resources. A second factor in dealing with functions was to use the broadest division of labor to cover every possibility. Only three actions could be taken on any one task:

a. Completion of the task.

b. Suspension of the task (attrition included).

c. Retention of the file at the end of the day for further processing.

To summarize, the results required were an arrangement of administrative information about the entire APW operations which could be updated and printed quickly.

Here are the steps which were taken to accomplish this end:

1. The tasks of all stages from initial review to final completion were identified and numbered one through forty-two. This became the first line under the heading.
2. The next step was to determine probability time for completion of each task of each current stage by using the PERT activity formula. This would become line two of the report.
3. The third line was the actual completion time for all completed tasks. This was accomplished by going first to the reports and second to the individual file. At times there were questions as to what constituted the desired date.
4. Suspense data was to be shown on the fourth line. Although some of the requirements such as location or priority were not included, at this point the machine environment had to be considered. The reasoning of the required

configuration and report format went something like this:

a. Electric Accounting Machines would not be desirable because of the limited print area.

b. The most available computer in the area was the IBM 1401, which has 132 print positions.

c. In order to keep borrowed paper and computer time to a minimum, every print line and print position would be used.

d. Since dates make up the majority of the data, this information must be shown in its simplest form--the Julian date. Julian dates are determined by numbering, consecutively, each day of the year from 001 to 365. Most office calendars have the Julian date written below the usual presentation, e.g., January 1 = 001, October 8 = 281. (If cost had not been a criterion, this approach would not have been used since people normally do not use this type of day-of-the-year determination.) This is an instance where anthropocentricism was overridden by cost.

e. Since numbers or codes are more economical than words, such symbols will be used to

identify state, attrition status, priorities, and location of files.

Next, the system and the hardware environment were combined. There were four lines of data for each project, arrayed as follows:

Beginning in the left-hand margin on the first line appeared the captions for state, project number, and task numbers one through forty-two (STPRJ 01 02 03 04 05 06 07 -------- 42).

Tasks 01-07 made up the application stage or Stage I. Task 01 was the Program Officer's Review of the application, Task 02 was the Engineering Review, etc. Task 42 was the final 10 per cent requisition.

On the second, third, and fourth lines the state code used was a standard code. The project number was the sequential numbering applied as applications were received. The state code 26 stood for the state of Missouri, and 002 stood for the application or project number. In this case 26002 stood for the APW application of Lake Lotawanna, Missouri. None of the following information actually pertained to this real application.

The remaining digits on line 2, read in groups of three digits, represented the SCAT or probability date of completion for each task. The report would now look like this:

STPRJ 01 02 03 04 05 06 07
260022702812862912963010 36

Line three, as discussed above, shows the actual completion dates for each of these tasks. These digits are also read in groups of threes after the state and project code. The report would now look like this:

```
STPRJ 01 02 03 04 05 06 07
260022762812862912963010 36
2600227827828 1
```

Some of the specific requirements of our system have been met, namely:

1. By updating this system the status of each APW application could be determined as of the close of business the preceding day. The data shows the date of completion of every task. For example, Task 02, the Engineering Review, was completed on 278 or October 5.
2. The next task to be completed is Task 05, since line 3 is blank at this point.
3. Estimated completion dates are shown for the remaining tasks on each project. For example, the SCAT time (probability) for Task 05 is 296 or October 23.

The emergence of a bar-chart arrangement is apparent, but SCAT is different from a usual bar chart in that it has something to say.

Now we can solve our other problems. Suspense dates can be placed on line 4 as follows:

```
STPRJ 01 02 03 04 05 06 07
260022762812862912963010 36
26002278278281281
26002              298
```

Since Task 05 is the Program Officer's Final Application Review, the report now indicates that this task has been suspended for additional data until October 25.

The next problem was the indication of priority and file location. At this point it was necessary to determine the amount of printing space left on each line. The greatest number of print locations for any line on most 1401 computers is 132. Two positions had been used for state, three for project number, and three each for 42 tasks, or a total of 131. The remaining space would be used for priority and file location codes on separate lines. Priorities were indicated by a symbol in the first left-hand column nearest the margin of line 3. An asterisk meant top priority, the letter A the next priority, etc. The file location code was located on line 4 in the left-hand margin. Letters which would be easily recognized were used, e.g., "E" for Engineering, "L" for legal, etc. If the position was blank the file folder was in the central files.

The finished SCAT report looked like this:

```
 STPRJ 01 02 03 04 05 06 07
 260022762812862912963010 36
B260022782782812812952 96
 26002
 STPRJ 01 02 03 04 05 06 07 08 09 10 11 12
 260032762812862912963010360410440470500 53
*260032752752822902912910350 40
L26003
```

If the date of this report is 043 or February 12, several things can be determined:

Application 26002 has yet to receive Central Office Approval, Task 07. Its priority is low, "B," and the file folder is located in the files since no letter code is found on line 4.

Application 26003 has the highest priority, "*." On February 4, Central Office approved this application. The SCAT time was, therefore, extended into State II, the Grant Offer Stage. This SCAT time is calculated on the date of this approval, thus each stage is keyed to the date of the last task of the preceding stage, except in the case of Stage I, which is keyed to the date that the application was received, that is, Task 01 SCAT time is five days after this date. Applications 26002 and 26003 were received on 271 or September 28.

The desired characteristics of the system had been achieved, except for the indication of the work-load of each section of APW operations. Each section could, of course, go through the report and list the applications/projects by tasks. It would be easier to do this by the computer, but at first lack of finances demanded that this be delayed since a basic criterion was to borrow computer time. It seemed apparent that it would be possible to borrow computer time, but to borrow storage was out of the question; therefore, the entire project was kept on cards, which could be

used by any 1401 regardless of configuration.

In a period of two weeks the system was programmed, tested, and in operation using borrowed hardware. While one other government agency helped with the keypunching necessary to build the file with historical data, civilian firms were more generous with their hardware. Since a staff of EDP people was not available, this action was truly an administrative effort. When the success of SCAT was evident, steps were taken to continue it legitimately as a six months' experimental program.

There is an old saying in the Navy: "That which doesn't originate in the Bureau of Ships is no darn good." That which originates in the regional offices without central office knowledge seemed "no darn good" to CFA and HHFA in Washington. The fact that SCAT was developed and working in Region V without the knowledge of Washington was not as important to them as was the lack of co-ordination. For a time it appeared that it would become a detriment to the Regional Administrator and the Regional Director rather than a compliment to their administrative ability. Finally, approval was granted, but not before the capacity to borrow time became severely taxed. Other Federal investigations have noted the fact that improved systems quite often develop in the field.

With six months' operation assured, refinements of the systems were investigated. One of the early problems

was source data. The original system called for each person who performed a task to indicate this action by checking a list of all tasks and indicating the state project, number, and date. This proved unworkable because of inadequate compliance or noncompliance. The obvious answer was cybernetics--program the computer to produce every possible type of source data that could be submitted daily for each task. The source data in question would be punched cards produced at the same time reports were printed by the computer. These cards would indicate state and project number as well as the next task number in each case. They would then be given to the person or section doing the work, and when a task was completed the person doing so would sign each card and send it to the computer. All cards not used in one day would be thrown away; consequently, no one had to account for these cards. The computer would reproduce those that were needed for the next day. This appears as a waste since only about one hundred of a thousand cards were used daily. The thousand cards cost only about a dollar, yet many man hours would have been lost if an attempt had been made to file these cards. The major advantage was that no keypunching was required. Each time a human transcribes data, errors are made. By using this automatic technique, accuracy greatly increased. Of course, blank cards could be used if more than one task was completed in one day.

The other possible actions besides completion of the

task could be performed by a person--suspension of processing or retention of the file for completion the next day. Processing could be suspended for additional data; this procedure was already known in the office by the acronym SAD. This was indicated on the SCAT report by line 4. In addition, failure to complete a task meant that the file location had to be indicated on the SCAT report. Again the computer was called on to perform this production of source data. The line personnel now were given every card necessary for reporting any actions. This completes what is known as a closed-loop system. The computer produced its own input. It is that highly desirable state in any system known as source-data automation. The cybernetic cycle was complete.

During this time the SCAT report was being refined. At first all projects were listed. In order to improve the control and create a more manageable pipeline load, those applications having priority were printed in the report from Tuesday through Friday. This report was entitled the Daily Activity Report. On Monday all APW applications and projects were printed in a report called the Master Report. In this way the efforts of the operations staff were directed to priority items, and the SCAT reports carried information on those projects having a changing status. The work-load report known as the Task Audit was produced twice a month. It consisted of a sequential listing by task number. All of the reports were produced in multi-copies, which matched operational divisions.

The Task Audit still did not satisfy the need for current work-load information. The new automated source data could supply the answer. In order to distribute the cards to the people performing each of the numbered tasks, it was necessary to sort the cards by task. This deck then represented the work-load. Two reports were generated from this source.

One report was a Daily Task Audit which indicated the tasks to be performed, listing them by state and project as well as showing the SCAT date or SAD date when applicable. This report went to the various section chiefs to indicate their work-load, just as this same information was indicated by the cards to each person who performed an operation task.

The administration of APW required another report. This was the Task Audit Summary which presented the work-load in meaningful totals. Armed with this report, the Regional Director could tell at a glance the status of the pipeline. He could pin point obvious trouble spots and allocate his resources accordingly. Using the Daily Activity or the Master Report, he could answer any applicant or Congressional inquiry about the status of any particular item without having to use the file. From clerk to boss the same accurate data was being used, in the correct format for each.

Other smaller refinements were augmented. For example, in the beginning each SAD date on line 4 had to be removed by using special input cards for that purpose. This

was improved by programming the computer to remove the SAD date when the task was completed.

Other meaningful procedures were denied because of lack of funds. One such improvement was the computer preparation of report data in machine language compatible with the Central Office EDP system.

The reporting of key actions to the Central Office concerns one-third of the 42 tasks. Before SCAT the inadequacy of information to the Central Office was a problem in every regional office. Some had an incidence of error in excess of 50 per cent. The SCAT system reduced the incidence of error to 7 per cent in Region V. This could have been further reduced if the Central Office had provided funds sufficient to permit programming the production of cards for their system at the same time the SCAT data was being produced. The lack of involvement of administrators at the Washington level spelled the doom for any such unified system. The support and leadership offered by the Regional Director, CFA, Region V, and the Regional Administrator, HHFA, Region V, was in sharp contrast to this attitude.

The daily SCAT system could be diagrammed in a circle or closed-loop fashion similar to a face of a clock. Beginning at the one o'clock position, the person performing the task submitted one of three cards (task completion, SAD, or location). At the three o'clock position the cards were sorted by state and project number. At the five o'clock

position the computer program went into operation and produced the Daily Activity or Master Report (depending on the day of the week). At six o'clock it updated itself by producing a new card which included the updated information; it also produced the next day's input at the same time. At the seven o'clock position these card outputs were sorted by state and project number. At the nine o'clock position they were run through the computer to produce the Task Audit and Task Audit Summaries. Finally, at the eleven o'clock position the reports and cards were sent to the various sections for the next day's activity. Thus, the system was a completed loop or circle.

The computer operation was done on a contract basis. Although two runs were made of the reports in order to supply sufficient copies, the whole operation took less than one hour of IBM 1401 computer time. Before SCAT, full-time clerks were used to search for files and supply information to the "yellow thing." This inadequate system cost approximately $825 per month compared to approximately $850 for SCAT. In addition to the planned results other beneficial effects resulted:

1. Increased goal orientation
2. Improved staffing
3. Reduced crises and bottlenecks
4. Improved team spirit
5. Improved indoctrination of new employees

There were other unsuccessful attributes:

a. The file location routine was never more than 80 per cent accurate. (This represented a 100 per cent improvement over the manual systems.)

b. The rapid development with limited parallel testing created many chaotic days for an already overloaded staff.

c. Inadequate training and operational material took its toll in causing many audits of the data.

d. The use of Julian dates created confusion at first.

e. Finally, the major problems were behavioral. One of these has been mentioned--the failure to establish rapport with the Washington CF and HHFA agencies. The system was constantly in the position of being a "can rattler," begging for funds.

The basic system was developed while one key person was on leave. Upon his return there were many trying hours devoted to convincing this person that a workable system could be developed in his absence.

One early problem was securing the co-operation of personnel in filling out source documents; however, once the source data was automated, the computer would point the finger

daily at the malingerer. This is an excellent example of how a computer can contribute to the solution of a poor behavioral situation. This problem was especially acute with the legal staff, probably for two reasons.

First, the lawyers were not under the Regional Director in the scalar organizational structure but rather occupied a parallel position. From this vantage point they could refuse to have anything to do with the cards and entrust the reporting function to secretaries. Omissions naturally occurred.

Second, lawyers are trained to solve problems by induction through case studies. They reason from the particular to the general; therefore, any logic from the general to the particular is suspect. Systems work employs such logic.

All of these problems were not destructive, only annoying, requiring patience and tact. A rule of thumb for any systems person is to try to focus all criticism upon himself rather than upon the system. A shrewd person can survive a bad opinion held by others; a system cannot even defend itself.

SCAT was still only half a loaf. As an administrative tool it had an even higher destiny. Although Luther Gulick's works are old, they are not without meaning today because data-processing is operational and non behavioral; his formula of POSDCORB could be applied to SCAT. SCAT indeed

aided planning, organizing, staffing, directing, co-ordinating, and reporting; but it lacked a budget response. Funds did not permit work-measurement studies of the SCAT data; however, a work measurement opportunity did arise in the Urban Renewal Branch of Region V. The purpose of the system was the monthly reporting of the daily work measurements. The results desired were a man/hour expenditure record divided into professional and clerical divisions, an hour summary by project, and an audit report listing by exceptions of those persons who reported either over or under the required normal duty hours.

A synopsis of the mechanics of the system were as follows:

a. Each staff member was given 100 pre-punched cards indicating the staff members' name, section, and type (clerical or professional).

b. After completion of a task the staff member recorded on the pre-punched card the state, project number, task number, and amount of time required to complete the task.

c. The cards were collected daily and the reports processed monthly. This system is mentioned because of its obvious compatibility with SCAT. All the SCAT input needs to perform this action is the time required for the tasks.

The system saved 306 man hours per month besides the increased accuracy. The system averaged about $200 a month in total system cost.

Primary interest here is not this time-saving but rather the compatibility of the work measurement feature with SCAT. The only change for the person performing a task would be that instead of signing his name to the SCAT input card, he would use a numeric code and write on each the time it took to perform the particular task being reported. After the SCAT system finished with the cards they would be saved and processed in the work-measurement program. In addition, they would be used to produce the daily and periodic staffing reports of time and attendance. By providing this type of budget information, SCAT would be perfected as an administrative system, and all based on one automated source document.

Other improvements could have been made. The system could have been more anthropocentric by not using numerical Julian dates and using instead the numeric month, day, and year. In addition, alphabetic information should have been included. Such things as the name of the applicant, the name of the authorized representative, the consulting engineer, etc., should have been available with the control data.

The mechanical approach to the problems of administration will be deplored by many behavioral scientists. The fact remains that mechanization has an impact on behavioralism that varies from abolishing human interaction through

automation of an organization to at least modifying the social relationships. While this system had some behavioral problems, the system worked in spite of them. The basic problem of execution of the public will must be served prior to the problem of relationships of employees. The computer can do just that through serving as an automated organization.

Several basic criteria emerged from the system:

1. Maximum automation without regard for staff.
2. A cybernetic approach, closed-loop system, should be used for maximum feedback opportunities. Automated source data should be utilized, with one input format serving every data-processing relationship that one employee has with the total system.
3. Every administrative response should be served by this source data, from planning to audit.

Finally, the computer system of the next era is the real-time system. This means that by using terminals at some distance from the computer a user can correspond with the computer in real time or instantly. Instead of using reports and cards, the line and staff will use a console device to update, query, and analyze stored data. SCAT is compatible with this system of the future. It, therefore, can contribute greatly to present operational systems as well as to future strategic systems.

SCAT SYSTEM
(Closed Loop)

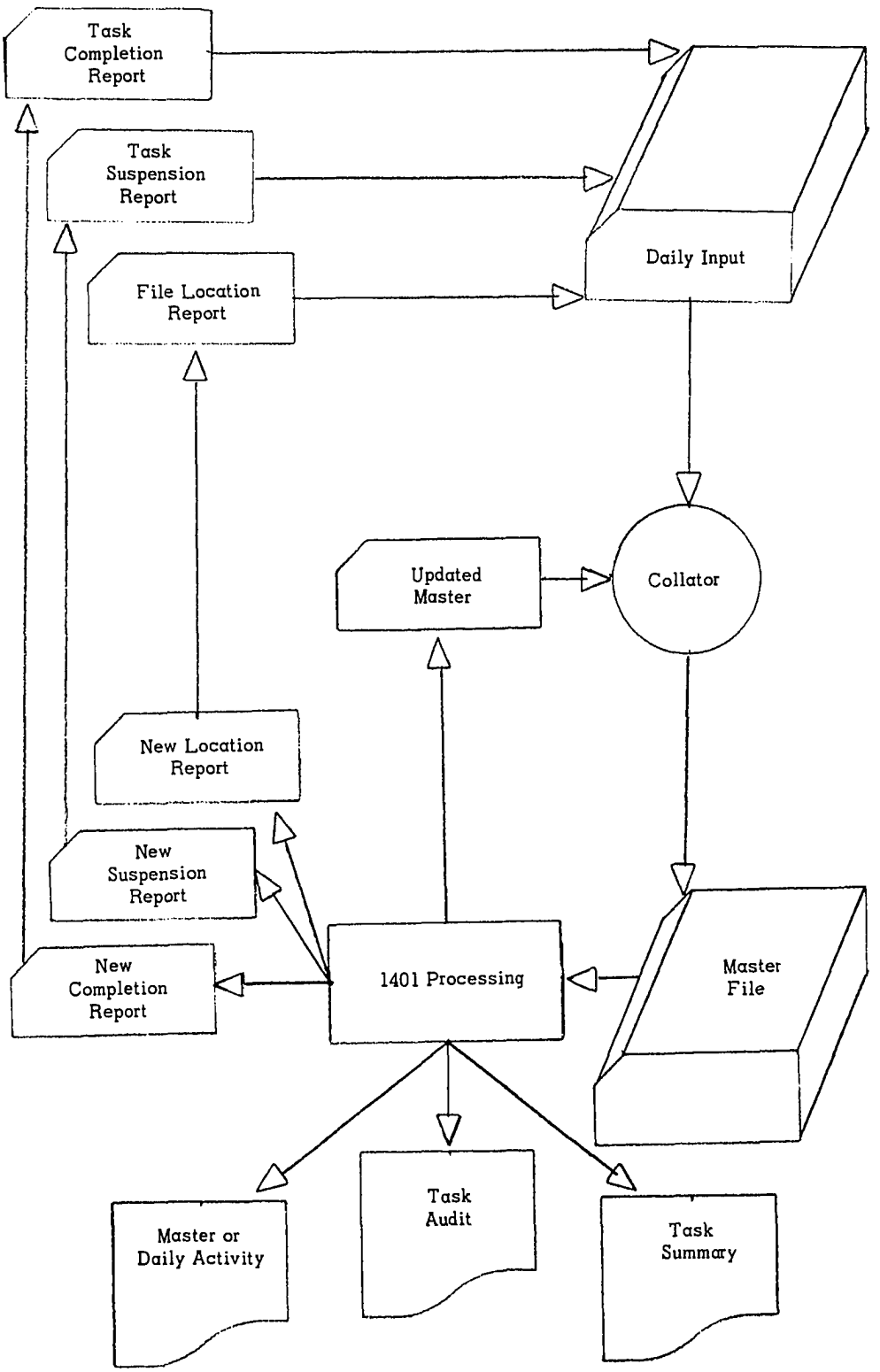

APPENDIX III

PROJECT SPUR 1965

The purpose of Project SPUR (Systems Procedures Update Research) in 1965 was the development of electronic data processing systems for the College Housing Program of Region V. The system requirements included the elimination of human prejudice and program maintenance as much as possible. The characteristic of flexibility was also needed in order to utilize the final results in other CF Programs. Finally, training material would be developed to explain the system.

Administrative improvements became a part of the Federal government almost immediately after the ratification of the Constitution. When the Navy Department was carved out of the original War Department, administrative improvement occurred in the form of functional reorganization. Although many scholars have attempted to trace administration studies back to Alexander Hamilton and Thomas Jefferson, most agree that Woodrow Wilson, writing in the Political Science Quarterly of 1887, initiated the field of study. Frank Goodnow further added the dichotomy of politics and

administration. In the twentieth century the use of the functional reorganization continued, with the Reorganization Acts of 1939 and 1945 and the First and Second Hoover Commissions. In addition, the Courts and the Congress were given administrative reorganizations in 1939 and 1946, respectively.

The techniques of administration began improving in this century. The early works of Frederick Taylor and Henri Fayol contributed greatly to industrial management. The beginning of the behavioral approach can be seen in the writings of Max Weber and Chester Barnard; however, Herbert Simon's Administrative Behavior is one of the first definitive works in this field.

Since World War II a most important technical advance has occurred--the electronic data processing revolution. The computer has become an important adjunct to administration. Using this device, the Navy developed PERT (Program Evaluation Review Technique) for the Polaris missile program. Advanced information technology has rapidly come of age. Administrative studies and operational research projects have been conducted on an ad hoc basis. The cry has been to automate, not to administer. Project SPUR, like SCAT, is located among those solutions which seek administrative success through such automation.

After the successful operation of a control system (SCAT) in the APW program, the Regional Director of Community

Facilities conducted a seminar to acquaint key RO personnel with the uses of EDP in management. The primary purpose was the motivation of these individuals to accomplish a total system study. This study became the basis of a total automation proposal which was presented to OA and CO personnel. The approval of this proposal and the final arrangements with the University of Oklahoma resulted in the beginning of Project SPUR in September, 1964.

The proposed systems manual of the above proposal defined the entire problem as being divisible into six functional stages. The remainder of this report will concern the automation of these stages. Sample output data and block diagrams follow the text of this report.

The Application Review Stage, Stage I, is the most important because at this point data is transformed into machine language. This data is not only used for processing the Review Stage but also becomes the source of data for later stages as well as CO information.

Stage I represents a management-by-exception program. Its primary purpose is to point out possible areas for investigation by the operations staff in reference to application approval. It lists those exceptions which possibly could preclude approval of the application. In order to be effective, this program must be flexible and as free as possible from human error.

Flexibility capacity is consistent with current ideas

regarding managerial uses of computers. The most flexible computer is the human mind; the best programs probably will be those that simulate the processes of the human mind. For example, CF administrators are well aware of the fact that there is a carry-over of technical ability by persons working in one program who are reassigned to another CF program. Operation personnel who have worked in PFL can perform better in APW than can individuals who are new to the agency. It should be possible for a computer program to be written which could be used for different CF programs. This is accomplished through what are called parameter cards. A parameter in mathematics is a constant or arbitrary value which remains the same during a calculation.

These cards, then, remain the same during each different type of data processing. In order to understand how this works, you must realize that when data is taken from a printed form and put into machine language it becomes linear rather than vertical and linear. This means that all information is theoretically stored in a straight line electronically.

If one considers the information of an application as one record, within this record there are bits of data based on the answers found to each application question. Then, if these bits of data are linear, you may process the application by dealing with each bit of data in succession.

A parameter card defines how long the bit of information (field size) is and gives a command of what to do with the information. In order to change formats and process a PFL application rather than an APW application, all that is needed is a change of parameter cards using the same program. This achieves a maximum of flexibility. Any system designed by finite humans will be prone to error. Systems using computers are no exception; however, it is possible with computers to reduce the incidence of human error. In Stage I you will note that a large part of the machine effort is devoted to this problem of reducing errors.

Program A of Stage I is devoted to checking the transfer of data from the source document to machine language. The printout indicates the location of such errors. Errors indicated will be checked by keypunch operators who are responsible for this operation.

Program B produces the cover portion of a letter of disapproval. It might be wondered why a letter of disapproval and not one of approval is produced. This follows the philosophy of management by exception. This system is designed to point out problem areas by exception.

Program C is an edit program which checks to see that the application contains the correct type of information. Type of information refers to whether alphabetic information is located in an area or field reserved for this type of data.

Program D is a program designed to check that all questions which must be answered are answered.

Program E is included to check for logical errors. There are some questions that must logically have a particular answer. This program checks these answers.

Program F is that portion which does the actual processing. This is performed by comparison of application data to a parameter card. In the case of college housing we call these parameters the standard application. The routine determines and lists the exceptions as indicated by printing the appropriate remark.

Finally, Program G determines the sufficiency of the annual revenue to retire the proposed loan. This is based on calculations and comparisons using a debt service rate, loan value, and annual revenue. The printout indicates whether or not the revenue will be sufficient.

This is the conclusion of Stage I. The output from this stage is not mailed directly from the machine, but rather it goes to operations personnel who may check the entire output and may override any machine indication of a problem. As the parameter cards become more and more reflective of the judgment of operation personnel, the system becomes more efficient. The time it takes for the computer to perform Stage I is approximately 2 1/2 minutes per application. If maximum efficiency is reached, it would be possible to process 100 applications in slightly over

four hours' computer time.

In addition to the speed, there would be the extra advantage of uniformity of standards for each application. This does not mean that such uniformity would be mandatory. Separate parameter cards could be used for each region, for different types of institutions, or for each individual institution. This system is flexible and at the same time as free as possible from human error.

Stage II was planned to perform three functions. The first was the development of a Project Summary. The Project Summary as it is now used is actually an engineering profile of the project. Program A of Stage II produces the engineering data in approximately the same format as that which is currently being used. This functional profile approach is later used in Stage III. The financial data is also found in the loan offer, if its recapitulation is desirable.

Program B of Stage II is concerned with the reproduction of a loan agreement. This program had the following input variable:

1. Standard paragraphs with variable data regarding each project.
2. Standard paragraphs with no variable data.
3. Occasional paragraphs with variable data.
4. Occasional paragraphs with no variable data.
5. A one-time-only paragraph.

By using the variable input from the application and a table of standard/occasional paragraphs, it is possible to produce the document in question. This particular program can be used for other stages having similar problems as well as for other CF programs.

Program C is a program designed to reproduce an amortization schedule regarding the proposed loan. There are many "canned" or standard amortization programs; however, these programs do not produce schedules as required in the Regional Office. It has been very difficult to duplicate the technique used by the financial analyst. This program has the future capability of production of payment cards which can be used in managing the proposed loan.

Stage III is concerned with preconstruction functions. It is at this stage that the professional abilities of the engineering, financial, and legal staffs are such that there could be very little automation. There should, however, be one reference point for the entire stage. The project, as approved, should be the same project as that specified in the Project Summary. This should be true, also, for the plans and specifications, proposed contracts, or the executed contracts.

The program for this stage consists of comparing any engineering data with the same data on the Project Summary and listing those exceptions which are different for the new data. This program is a variation of Program A of Stage II,

as noted above. It may also be used in other CF programs.

Stage IV is the Construction Stage of application processing. While it has not been evident during the stages described above, the control system SCAT would be used. Scheduling is also important at this stage. While other administrative tasks are performed at this point, the major operation is requisition processing. SCAT can handle the control problem. Program B of Stage II can produce requisitions by using different tables of text material and variables from the application data. This type of automation could also be improved if preprinted forms were used. Finally, this program should be integrated with the accounting functions performed by the Accounting Branch. Another task performed at this time is a review of the entire project in preparation for the Audit Stage. There are no pre-audit check lists, but one should be developed for each program. These lists could be developed as audit exceptions are noted.

The Audit Stage V will utilize such pre-audit lists. The lists will be filled in by operation personnel and keypunched just as an application would be. By using parameter cards for the audit stage of each CF program, the same technique used in Stage I will be applicable. If there are no exceptions, an audit request for the project will be submitted. This is another example of the versatility of the Stage I program.

One of the desirous audit devices mentioned when defining Project SPUR was a program to produce special

quantitative reports. Stage V Program A is such a program. It is designed to be used with variable headings (or constants). It gives totals, page footings, and grand totals, or it merely lists alphanumeric information. This will relieve the operation staff from searching, compiling, and tabulating special quantitative reports.

The final stage is the Loan Management, Stage VI. For this stage three different computer operations are performed. Again by using the Stage I program, the Report of Initial Compliance and Loan Management Report is processed. Parameter cards for both reports will be used to process the data as required.

The final program will be the generation of the Quarterly Loan Management Report. This report is a summary of the following:

1. Number of loans under management.
2. Number of loans in Group I.
3. Number of loans in Group II.
4. Number of loans in Group II in default.
5. Number of delinquent Reports of Initial Compliance.
6. Number of delinquent Loan Management Reports.
7. Number of initial conferences held during the quarter.
8. Number of projects visited during the quarter.

In addition, a listing of those loans in Group II is

produced, indicating stage and project number.

Thirteen different programs have been developed over a period of nine months to perform the functions of the six stages as originally planned. The gains of Project SPUR have not all been in software but have also been in the advancement of our understanding about administration. As we know, our present methodology is on a case-by-case method. This methodology is fine where long periods of time can be taken to accomplish program development and operations.

The ad hoc management phase is this current system. It is characterized by the case-by-case approach. Using this methodology, decisions are delayed and are made by anonymous persons based on anonymous values. Excessive scope and detail here leads to inefficiency. Goal definition is inadequate or nonexistent. Extreme situations of this phase result in a type of administrative anarchy.

The second phase concerns preventive management. This is the phase where SCAT- and SPUR-type programs will be developed to prevent the occurrence of specific problems. It grows out of a period of crisis, especially that of high volume. This approach leads to greater efficiency, but it is still an automated manual system of processing data.

The last phase is the predictive management phase. The development of this system is an outgrowth of data recorded during the preventive management phase. This data is used to test values before they are adopted as standards

or rules. In college housing, for instance, it should be possible to apply certain standards to the recorded data and predict the effect of the program upon all institutions of higher learning. Processing of applications will be concerned with confirmation of those predictions. The attainment of goals will be fast and accurate. This type of processing will be akin to what is known as game theory. This is a mathematical process to develop the best possible plan when confronted by alternative situations.

In summary, the systems developed by Project SPUR will do a better job at a possible lower cost. Better utilization can be made of personnel as they are freed from tedium. Programs can become more applicant centered as excessive red tape is abolished. Improved information will be accurate and constant; the same data will be used by RO, CO, and OA. The foundation of the entire system, and its greatest contribution, is this current information in a usable format. In fact, the future of this or any other agency may depend upon its information technology.

Let there not be any misunderstanding at this point that Region V is desirous of usurping the plans of CO or OA in this field; on the contrary, all that is desired is an equal partnership with over-levels of responsibility in the improvements of our functions. Region V has progressed to this point with a very limited financial expenditure and a great deal of human effort by the entire staff. Facilities

and computer time have been borrowed from the Bureau of Government Research at the University of Oklahoma. In fact, the cost of Project SPUR is probably less than 10 per cent of the comparable cost of similar research by any other method. Our administrative laboratory has been a success.

In addition, a proposed slide presentation for training purposes has been completed. It contains information similar to that found in this report, as well as material for graphic presentation.

The comparative cost of the proposed system as compared to the present system now being used by College Housing has not been made. Such information will be compiled during a parallel testing program.

Even though there have been successes, the year has not been without its problems. There have been three basic problem areas.

The first to develop was that area which concerned the institutional relationship. The University was not used to dealing with an office such as ours. Nor was the Regional Office completely prepared to deal with the personnel at some distance from the Fort Worth area. This was a problem of communication, and as soon as everyone was satisfied with everyone else's activities there were few difficulties.

The most important problem concerned part-time programmers. Four different programmers worked on Project

SPUR. There are several reasons for this turnover: first, persons who qualified in the academic area to do this type of work were only trying to get experience before they went on to better jobs. As soon as they had a little experience they were hired away from Project SPUR. Second, the number of hours and the time of these hours created a problem for these part-time people. This was especially true of those individuals who were working at Tinker Air Force Base. These people were not only working full time at Tinker but they were also going to school and working for Project SPUR at night and on weekends. Even the young and the strong could not take this pace for an extended period of time. Finally, part-time personnel, because of their lack of experience, were unable to assume some system responsibility in the absence of the director of the program due to illness. Project SPUR, therefore, had no back-up capabilities.

The last problem was expected from the beginning. The low budget was sometimes frustrating; however, the University of Oklahoma and other individuals lessened the impact of this problem by being most co-operative and helpful in every way.

One of the advantages of research of this nature is that the agency is not tied to one particular configuration of hardware. It is possible for us to go through several generations without ever having to buy hardware which would delay such an evolution. The obvious next step should be the

development of a problem-oriented language. This is not only possible but highly desirable. It means that a special computer language would be developed and used throughout HHFA. There are many computer languages, most of which have been developed for mathematicians or engineers. In addition, there are languages for business applications; however, a suitable system which could be used in the field of public administration has never been developed. This could be our future research goal.

While a complete prospectus has not been prepared for the activities of the coming year, the problem-oriented language will be the focus of research activities. In addition, testing and improvements of the programs covered in this report will be done. Initial tests should concern only Stage I in a parallel test with the Regional Office. Before the other stages are tested they should be examined for systems improvements to enhance their adaptability to electronic data processing.

OUTPUT DATA

Stage I Program A

Keypunch Edit

FOR EACH CARD,COLUMNS INDICATED WERE NOT COMPLETED BY KEY+PUNCH.

```
00000000000000000000000000000000000000000000000000000000000000000000000000000000000000000000000000
00000000011111111112222222222333333333344444444445555555555666666666677777777778
12345678901234567890123456789012345678901234567890123456789012345678901234567890


BISHOP COLLEGE0000000000000000000000000000000000000000000000000000000000000000DALLA
      1
BISHOP COLLEGE                                                                  DALLA


00000000000000000001111111111111111111111111111111111111111111111111111111111111
88888888899999999990000000001111111112222222223333333333444444444455555555556
12345678901234567890123456789012345678901234567890123456789012345678901234567890


SOTEXAS0000000000000000000000000DALLAS000000000000000+-----+------000000--0000000

S TEXAS                              DALLAS                  +-----+------       --


11111111111111111111111111111111111111112222222222222222222222222222222222222222
66666666677777777778888888888999999999900000000001111111111222222222233333333334
12345678901234567890123456789012345678901234567890123456789012345678901234567890


-- ++++-      545    590000664000000+00220000000+00480++-+-+-0350+00000000+00++162
  1      11111   111
-- ++++-      545    5900006640000000+  220000000+  480++-+-+- 350+         +  ++162


22222222222222222222222222222222222222222222222222222222222233333333333333333333
44444444455555555556666666666777777777788888888889999999990000000001111111112
12345678901234567890123456789012345678901234567890123456789012345678901234567890


50020000000250000750000071000123500000000000010435000100000250000052000023000000

50020000000250000750000071000123500000000000010435000100000250000052000023000000


33333333333333333333333333333333333333333333333333333333333333333333333333333334
22222222233333333334444444444455555555556666666666777777777788888888899999999990
12345678901234567890123456789012345678901234567890123456789012345678901234567890


11693100100000120800005000+++36205120825000+000000000000000000000000000001599905

11693100100000120800005000+++36205120825000+                                  1599905


44444444444444444444444444444444444444444444444444444444444444444444444444444444
00000000011111111112222222222333333333344444444445555555555666666666677777777778
12345678901234567890123456789012345678901234567890123456789012345678901234567890


01718955017211350+12380600011224500403100000+000000000000000000000000000000000000
```

```
 1718955017211350+12380600011224500403100000+

44444444444444444445555555555555555555555555555555555555555555555555555555555555
88888888899999999990000000000111111111122222222223333333333444444444455555555556
12345678901234567890123456789012345678901234567890123456789012345678901234567890

00167570000145530000+0000000458062000502642000673723000+229018000152188000928780

  167570000145530000+        458062000502642000673723000+229018000152188000928780

55555555555555555555555555555555555555555666666666666666666666666666666666666666
66666666677777777778888888888999999999900000000001111111111222222222233333333334
12345678901234567890123456789012345678901234567890123456789012345678901234567890

000+00000000000000000000000000000000000000000000000000000000000000000000000000000

   +

66666666666666666666666666666666666666666666666666666666666677777777777777777777
44444444455555555556666666666677777777778888888888999999999900000000001111111112
12345678901234567890123456789012345678901234567890123456789012345678901234567890

000000000000000000000000000000000000010345430023175320000000+--0-00001000000000

                                        10345430023175320000000+-- -    1000000000

77777777777777777777777777777
22222222233333333334444444444555555555566666666667777777777888888888899999999990
12345678901234567890123456789012345678901234567890123456789012345678901234567890

000000000000000+++---+-+ +++++++++-0+++0000++++++--0-0000+++0000+++++00000000000
                        1
                +++---+-+ +++++++++- +++    ++++++-- -    +++    +++++
```

Stage I Program B

Letter of Disapproval

RE CH-TEX-44171

BISHOP COLLEGE
DALLAS TEXAS

ATTENTION WALTER B. JOHNSON

GENTLEMEN

REFERENCE IS MADE TO THE ABOVE CAPTIONED APPLICATION, WHICH AFTER EXAMINATION IS DEEMED INELIGIBLE FOR THE REASONS STATED ON THE FOLLOWING ATTACHMENTS.

Stage I Program C

Correct Type of Information

(Without and with exception)

THESE DATA FIELDS ARE INCOMPLETE.

THESE DATA FIELDS ARE INCOMPLETE.

QUESTION NUMBER 0001
QUESTION NUMBER 0002
QUESTION NUMBER 025
QUESTION NUMBER 0007

Stage I Program D

Blank Data Field

(Without and with exception)

THESE QUESTIONS WERE NOT ANSWERED.

THESE QUESTIONS WERE NOT ANSWERED.

QUESTION NUMBER 064

QUESTION NUMBER 014

Stage I Program E

Logical Inconsistencies

(Without and with exception)

ANSWERS GIVEN TO THESE QUESTIONS ARE LOGICALLY INCONSISTENT WITH PREVIOUS ANSWERS.

ANSWERS GIVEN TO THESE QUESTIONS ARE LOGICALLY INCONSISTENT WITH PREVIOUS ANSWERS.

QUESTION NUMBER 0017

Stage I Program F

Application Review

(Without and with exception)

THESE FACTORS PRECLUDE CONSIDERATION OF YOUR APPLICATION AT THIS TIME.

THESE FACTORS PRECLUDE CONSIDERATION OF YOUR APPLICATION AT THIS TIME.

REMARK 001
REMARK 002
REMARK 003
REMARK 004
REMARK 005
REMARK 006
REMARK 007
REMARK 008
REMARK 009
REMARK 010
REMARK 011
REMARK 012
REMARK 013
REMARK 014
REMARK 015
REMARK 016
REMARK 017
REMARK 018
REMARK 019
REMARK 020
REMARK 021
REMARK 022
REMARK 023
REMARK 024
REMARK 025
REMARK 026
REMARK 027
REMARK 028
REMARK 029
REMARK 030
REMARK 031
REMARK 032
REMARK 033
REMARK 034
REMARK 035
REMARK 036
REMARK 037
REMARK 038
REMARK 039
REMARK 040
REMARK 041
REMARK 042
REMARK 043
REMARK 044
REMARK 045
REMARK 046
REMARK 047
REMARK 048
REMARK 049
REMARK 050
REMARK 051
REMARK 052
REMARK 053
REMARK 054
REMARK 057
REMARK 058

Stage I Program G

Sufficiency of Annual Revenue

(Without and with exception)

LOAN VALUE X CONSTANT
426930+

ANNUAL REVENUE
2201

ANNUAL REVENUE IS SUFFICIENT

LOAN VALUE X CONSTANT
426930+

ANNUAL REVENUE
2423252

ANNUAL REVENUE IS INSUFFICIENT

Stage II Program A

Project Summary

HOUSING AND HOME FINANCE AGENCY

COMMUNITY FACILITIES ADMINISTRATION

COLLEGE HOUSING PROGRAM

PROJECT SUMMARY AND APPROVAL

PROJECT NO. CH-TEX-171(DS)

RELEASE DATE 31 MAY 1965

APPLICANT NAME BISHOP COLLEGE

ADDRESS DALLAS, TEXAS

BRIEF PROJECT DESCRIPTION

UNIT A... A NEW DORMITORY FOR APPROXIMATELY 218 MEN STUDENTS AND 2 SUPERVISORS.

UNIT B... ADDITION AND REMODELLING OF EXISTING DINING FACILITY TO PROVIDE FOR 350 ADDITIONAL STUDENTS.

UNIT C... THREE NEW APARTMENT BUILDINGS TO HOUSE APPROXIMATELY 25 STUDENTS FAMILIES AND 23 FACULTY MEMBERS.

METHOD OF FINANCING	AMT OF LOAN	APP FUNDS	TOTAL EST COST
A. HOUSING FACILITIES	$ 10,740.00	$ .00	$ 10,740.00
B. RELATED SERVICE FACILITIES	$ 840.00	$ .00	$ 840.00
C. SUBTOTAL-A PLUS B	$ 11,580.00	$ .00	$ 11,580.00
D. OTHER SERVICE FACILITIES	$ 420.00	$ .00	$ 420.00
E. TOTAL PROJECT COST	$ 12,000.00	$ .00	$ 12,000.00

TERM OF FEDERAL LOAN 40 YEARS AT 3.5 PERCENT INTEREST.

ESTIMATED COST OF FURNISHINGS AND MOVABLE EQUIPMENT $ 1,000.00

CONSTRUCTION SUMMARY

PROJECT COST ESTIMATED

PRELIMINARY EXP. $ .00

LAND AND RIGHTS-OF-WAY	$	.00
CONSTRUCTION	$	10,776.00
ARCHITECTURAL ENGINEERING SERVICES	$	647.00
LEGAL EXPENSE	$	54.00
ADMINISTRATIVE EXPENSES	$	.00
INTEREST DURING CONSTRUCTION	$	240.00
GOVERNMENT FIELD EXPENSE	$	54.00
PROJECT CONTINGENCY	$	229.00
TOTAL PROJECT COST	$	12,000.00

CONSTRUCTION COST ANALYSIS

BUILDING	$	5,350.00
SITE IMPROVEMENTS	$	200.00
UTILITY CONNECTIONS	$	25.00
FIXED EQUIPMENT	$	750.00
CONTINGENCIES	$	170.00
TOTAL CONSTRUCTION COST	$	6,495.00

COST STATISTICS		COST PER SQ FT		COST PER STUDENT
BUILDING ONLY	$	12.03	$	24.54
ALL CONSTRUCTION	$	14.61	$	29.79
TOTAL PROJECT	$	16.26	$	33.18

SPACE DISTRIBUTION	SQ FEET	PERCT TOT SPACE
A. REVENUE-PRODUCING SPACE		
BEDROOM STUDY	22675	277(
DINING	3600	44(
OTHER REVNUE-PRODUCING SPACE	29280	357(

TOTAL REVENUE-PRODUCING SPACE	55555	678(
B. ALL OTHER SPACE		
IMPROVED SPACE	21815	266(
UNIMPROVED SPACE	4540	55(
TOTAL-ALL OTHER SPACE	26355	322(
GRAND TOTAL	81910	100(

STATUS OF SITE ACQUISITION

ESTIMATED PERIOD FROM APPROVAL TO START OF CONSTRUCTION.....02 MONTHS.

ESTIMATED CONSTRUCTION PERIOD....10 MONTHS.

Stage II Program B

Loan Agreement

(Without variables and with variables)

THIS LOAN AGREEMENT, DATED AS OF * , BY AND BETWEEN * HEREIN CALLED THE BORROWER , AND THE UNITED STATES OF AMERICA HEREIN CALLED THE GOVERNMENT , WITNESSETH

SECTION 1. AMOUNT, PURCHASE PRICE AND PURPOSE, SUBJECT TO THE TERMS AND CONDITIONS FORM CFA-520 DATED JULY 1960 , ATTACHED HERETO AND MADE A PART HEREOF AS EXHIBIT A, AND THE PROVISIONS OF THIS AGREEMENT, THE BORROWER WILL SELL AND THE GOVERNMENT, ACTING BY AND THROUGH THE HOUSING AND HOME FINANCE ADMINISTRATOR HEREIN CALLED THE ADMINISTRATOR , WILL PURCHASE $ * AGGREGATE PRINCIPAL AMOUNT OF THE OBLIGATIONS OF THE BORROWER DESCRIBED BELOW AS SERIES * BONDS, OR SUCH LESSER AMOUNT THEREOF AS THE ADMINISTRATOR ESTIMATES WILL BE REQUIRED, TOGETHER WITH THE BORROWER S FUNDS PROVIDED FROM OTHER SOURCES, TO PAY THE DEVELOPMENT COST OF THE PROJECT ESTIMATED TO $ * , HEREINAFTER DESCRIBED, AT A PRICE EQUAL TO THE PRINCIPAL AMOUNT THEREOF PLUS ACCRUED INTEREST, THE PROCEEDS OF THE SALE OF SUCH BONDS TO BE USED SOLELY FOR THE DEVELOMENT OF THE SAID PROJECT.

FURTHER, THE BORROWER AGREES TO EXCHANGE, AND THE ADMINISTRATOR AGREES TO ACCEPT IN EXCHANGE, BORROWER S * , FOR BORROWER S OUTSTANDING BUILDING BONDS OF 1961, NUMBERED FROM 1 TO 870, INCLUSIVE, NOW HELD BY THE GOVERNMENT.

C THE PROVISIONS AS TO TYPE, DENOMINATION, SECURITY, REGISTRABILITY AND PLACE OF PAYMENT APPLICABLE TO THE SERIES A AND B BONDS ARE AS FOLLOWS

1 TYPE NEGOTIABLE, SERIAL, COUPON BONDS.

2 DENOMINATION $ * HOWEVER, UNTIL SUCH TIME AS THE PURCHASERS OF THE BONDS REQUEST THE PREPARATION OF THE DEFINITIVE BONDS, A SINGLE BOND OR BONDS SHALL BE ISSUED IN AN AMOUNT EQUAL TO THE BONDS CONTRACTED FOR BY SAID PURCHASER OR PURCHASERS.

3 SECURITY A GENERAL OBLIGATION OF THE BORROWER ADDITIONALLY SECURED BY

4 REGISTRABILITY REGISTRABLE AS TO PRINCIPAL ONLY.

5 PLACE AND MEDIUM OF PAYMENT PAYABLE AS TO BOTH PRINCIPAL AND INTEREST AT THE PRINCIPAL OFFICE OF THE TRUSTEE TO BE DESIGNATED IN THE INDENTURE, OR AT THE OPTION OF THE HOLDER, AT A BANK OR TRUST COMPANY IN THE BOROUGH OF MANHATTAN, CITY AND STATE OF NEW YORK, IN ANY COIN OR CURRENCY WHICH, ON THE RESPECTIVE DATES OF PAYMENT OF SUCH PRINCIPAL AND INTEREST, IS LEGAL TENDER FOR PAYMENT OF DEBTS DUE THE UNITED STATES OF AMERICA.

SECTION 3. SALE OF BONDS. THE SERIES * BONDS WILL BE SOLD BY THE BORROWER AT PUBLIC SALE, THE CALL FOR BIDS SPECIFYING THAT BIDS WILL BE RECEIVED AND CONSIDERED ON THE FOLLOWING BASIS

IN THE EVENT ANY OF THE SERIES * BONDS ARE AWARDED TO THE GOVERNMENT, THE BORROWER SHALL, WHEN THEY ARE READY, DELIVER ALL SUCH BONDS TO THE GOVERNMENT AT SUCH TIME AS THE GOVERNMENT SHALL DESIGNATE.

THE GOVERNMENT WILL SUBMIT ITS BID FOR THE SERIES * BONDS AND SUCH BID WILL BE FOR ALL OF THE BONDS AT THEIR PAR VALUE, PLUS ACCRUED INTEREST, AT THE RATE OF * PER ANNUM ON ALL OR ANY ONE OR MORE OF THE ABOVE BLOCKS OF BONDS. IN THE EVENT ANY OTHER BIDDER OR BIDDERS OFFER TO PURCHASE ALL OF THE BONDS, OR ANY PORTION OF THE BONDS IN BLOCKS AS SPECIFIED AT AN INTEREST COST OF NOT MORE THAN * PER ANNUM, THE BONDS OR ANY SUCH PORTION THEREOF SHALL BE SOLD TO SUCH BIDDER OR BIDDERS. IN THE EVENT OF A SALE OF ALL THE SERIES * BONDS TO A PURCHASER OR PURCHASERS OTHER THAN THE GOVERNMENT, THIS AGREEMENT SHALL TERMINATE EXCEPT WITH RESPECT TO OBLIGATIONS HEREUNDER BETWEEN THE BORROWER AND THE GOVERNMENT AS OF THE DATE OF SUCH SALE OF THE BONDS. IN THE EVENT ANY OF THE BONDS ARE AWARDED TO THE GOVERNMENT, IT IS AGREED THAT THE OBLIGATIONS HEREUNDER SHALL CONTINUE IN THE SAME MANNER AS IF ALL THE BONDS WERE SOLD TO THE GOVERNMENT. IN THE EVENT NO BID IS RECEIVED FROM A BIDDER OR BIDDERS OTHER THAN THE GOVERNMENT WITHIN THE TERMS HEREIN SPECIFIED, ALL THE BONDS SHALL BE SOLD TO THE GOVERNMENT.

THE BORROWER AT THE OPTION OF THE PURCHASER S SHALL ISSUE SUNGLE BONDS WITH FACE VALUES IN THE AMOUNT OF THE RESPECTIVE PURCHASES IN LIEU OF INDIVIDUAL DENOMINATION BONDS. ALL SUCH SINGLE BONDS SHALL BE REGISTERED AS TO PRINCIPAL AND INTEREST AND PAYABLE AS DIRECTED BY THE PURCHASERS, BUT

PROJECT NO. CH-TEX-171 DS
BISHOP COLLEGE
DALLAS, TEXAS
CONTRACT NO. H-502-2043

LOAN AGREEMENT

THIS LOAN AGREEMENT, DATED AS OF DECEMBER 1, 1962 , BY AND BETWEEN BISHOP COLLEGE HEREIN CALLED THE BORROWER , AND THE UNITED STATES OF AMERICA HEREIN CALLED THE GOVERNMENT , WITNESSETH

SECTION 1. AMOUNT, PURCHASE PRICE AND PURPOSE, SUBJECT TO THE TERMS AND CONDITIONS FORM CFA-520 DATED JULY 1960 , ATTACHED HERETO AND MADE A PART HEREOF AS EXHIBIT A, AND THE PROVISIONS OF THIS AGREEMENT, THE BORROWER WILL SELL AND THE GOVERNMENT, ACTING BY AND THROUGH THE HOUSING AND HOME FINANCE ADMINISTRATOR HEREIN CALLED THE ADMINISTRATOR , WILL PURCHASE $ 1,200,000 AGGREGATEPRINCIPAL AMOUNT OF THE OBLIGATIONS OF THE BORROWER DESCRIBED BELOW AS SERIES B BONDS, OR SUCH LESSER AMOUNT THEREOF AS THE ADMINISTRATOR ESTIMATES WILL BE REQUIRED, TOGETHER WITH THE BORROWER S FUNDS PROVIDED FROM ANY OTHER SOURCES, TO PAY THE DEVELOPMENT COST OF THE PROJECT ESTIMATED TO $ 1,200,000 , HEREINAFTER DESCRIBED, AT A PRICE EQUAL TO THE PRINCIPAL AMOUNT THEREOF PLUS ACCRUED INTEREST, THE PROCEEDS OF THE SALE OF SUCH BONDS TO BE USED SOLELY FORTHE DEVELOMENT OF THE SAID PROJECT.

FURTHER, THE BORROWER AGREES TO EXCHANGE, AND THE ADMINISTRATOR AGREES TO ACCEPT IN EXCHANGE, BORROWER S BUILDING BONDS OF 1963, SERIES A, , FOR BORROWER S OUTSTANDING BUILDING BONDS OF 1961, NUMBERED FROM 1 TO 870, INCLUSIVE, NOW HELD BY THE GOVERNMENT.

SECTION 2. DESCRIPTION OF BONDS.

A THE SERIES A BONDS ARE DESCRIBED AS FOLLOWS

1 DESIGNATION BISHOP COLLEGE BUILDING BONDS OF 1963, SERIES A

2 DATE APRIL 1, 1963

3 PRINCIPAL AMOUNT $870,000

4 INTEREST RATE 3-1/2(PER ANNUM, PAYABLE SEMI-ANNUALLY ON APRIL 1 AND OCTOBER 1 IN EACH YEAR, FIRST INTEREST PAYABLE OCTOBER 1, 1963.

5 MATURITIES AS OF APRIL 1 IN YEARS AND AMOUNTS AS FOLLOWS

YEARS	AMOUNT	YEARS	AMOUNT
1964	$13,000	1987-1988	$23,000
1965-1968	14,000	1989-1991	25,000
1969-1973	16,000	1992-1993	27,000
1974	18,000	1994-1995	29,000
1975-1977	19,000	1996-1997	31,000
1978-1980	21,000	1998	33,000
1981-1982	23,000	1999-2000	35,000
1983	24,000	2001	37,000
1984-1986	26,000		

6 NUMBERS 1A TO 870A, INCLUSIVE.

7 REDEMPTION PROVISIONS BONDS NUMERED 1A THROUGH 117A, INCLUSIVE, MATURING APRIL 1, 1964, THROUGH APRIL 1, 1971, INCLUSIVE, TO BE NON-CALLABLE. BONDS NUMERED 118A THROUGH 699A, INCLUSIVE, MATURING APRIL 1, 1972, THROUGH APRIL 1, 1996, INCLUSIVE, TO BE CALLABLE AT THE OPTION OF THE BORROWER PRIOR TO THE STATED MATURITIES THEREIN, IN WHOLE OR IN PART AND IN INVERSE NUMERICAL ORDER ON ANY INTEREST PAYMENT DATE AFTER APRIL 1, 1971, UPON AT LEAST THIRTY 30 DAYS PRIOR NOTICE AT THE PRINCIPAL AMOUNT THEREOF, PLUS ACCRUED INTEREST TO THE DATE OF REDEMPTION AND A PREMIUM FOR EACH BOND AS FOLLOWS

3(IF REDEEMED OCTOBER 1, 1971, THROUGH APRIL 1, 1976, INCL.
2-1/2(IF REDEEMED OCTOBER 1, 1976, THROUGH APRIL 1, 1981, INCL.
2(IF REDEEMED OCTOBER 1, 1981, THROUGH APRIL 1, 1986, INCL.
1-1/2(IF REDEEMED OCTOBER 1, 1986, THROUGH APRIL 1, 1991, INCL.
1(IF REDEEMED AFTER APRIL 1, 1991.

BONDS NUMERED 700A THROUGH 870A, INCLUSIVE, MATURING APRIL 1, 1997, THROUGH APRIL 1, 2001, INCLUSIVE, TO BE CALLED AT THE OPTION OF THE BORROWER IN WHOLE OR IN PART AND IN INVERSE NUMERICAL ORDER ON ANY INTEREST PAYMENT DATE DURING THE ENTIRE LIFE OF THE LOAN, UPON AT LEAST THIRTY 30 DAYS PRIOR NOTICE, AT PAR PLUS ACCRUED INTEREST TO THE DATE OF REDEMPTION.

PRIORITY AS TO CALL SHALL EXTEND TO BONDS NUMERED 700A THROUGH 870A, INCLUSIVE, OVER BONDS NUMERED 118A THROUGH 699A, INCLUSIVE.

B THE SERIES B BONDS ARE DESCRIBED AS FOLLOWS

1 DESIGNATION BISHOP COLLEGE BUILDING BONDS OF 1963, SERIES B

2 DATE APRIL 1, 1963

3 PRINCIPAL AMOUNT $1,200,000

4 INTEREST RATE 3-1/2(PER ANNUM, PAYABLE SEMI-ANNUALLY ON APRIL 1 AND OCTOBER 1 IN EACH YEAR, FIRST INTEREST PAYABLE OCTOBER 1, 1963.

5 MATURITIES AS OF APRIL 1 IN YEARS AND AMOUNTS AS FOLLOWS

YEARS	AMOUNT	YEARS	AMOUNT
1966-1969	$15,000	1992-1995	$40,000
1970-1976	20,000	1996-1998	45,000
1977-1982	25,000	1999-2000	50,000
1983-1987	30,000	2001-2003	55,000
1988-1991	35,000		

6 NUMBERS 1B TO 1,200B, INCLUSIVE.

7 REDEMPTION PROVISIONS BONDS NUMERED 1B THROUGH 140B, INCLUSIVE, MATURING APRIL 1, 1966, THROUGH APRIL 1, 1973, INCLUSIVE, TO BE NON-CALLABLE. BONDS NUMERED 141B THROUGH 935B, INCLUSIVE, MATURING APRIL 1, 1974, THROUGH APRIL 1, 1998, INCLUSIVE, TO BE CALLABLE AT THE OPTION OF THE BORROWER PRIOR TO THE STATED MATURITIES THEREOF, IN WHOLE OR IN PART AND IN INVERSE NUMERICAL ORDER ON ANY INTEREST PAYMENT DATE AFTER APRIL 1, 1973, UPON AT LEAST THIRTY 30 DAYS PRIOR NOTICE AT THE PRINCIPAL AMOUNT THEREOF, PLUS ACCRUED INTEREST TO THE DATE OF REDEMPTION AND A PREMIUM FOR EACH BOND AS FOLLOWS

3(IF REDEEMED OCTOBER 1, 1973, THROUGH APRIL 1, 1978, INCL.
2-1/2(IF REDEEMED OCTOBER 1, 1978, THROUGH APRIL 1, 1983, INCL.
2(IF REDEEMED OCTOBER 1, 1983, THROUGH APRIL 1, 1988, INCL.
1-1/2(IF REDEEMED OCTOBER 1, 1988, THROUGH APRIL 1, 1993, INCL.
1(IF REDEEMED AFTER APRIL 1, 1993.

BONDS NUMBERED 936B THROUGH 1,200B, INCLUSIVE, MATURING APRIL 1, 1999, THROUGH APRIL 1, 2003, INCLUSIVE, TO BE CALLABLE AT THE OPTION OF THE BORROWER IN WHOLE OR IN PART AND IN INVERSE NUMERICAL ORDER ON ANY INTEREST PAYMENT DATE DURING THE ENTIRE LIFE OF THE LOAN, UPON AT LEAST THIRTY 30 DAYS PRIOR NOTICE, AT PAR PLUS ACCRUED INTEREST TO THE DATE OF REDEMPTION.

PRIORITY AS TO CALL SHALL EXTEND TO BONDS NUMBERED 936B THROUGH 1,200B, INCLUSIVE, OVER BONDS NUMBERED 1418 THROUGH 935B, INCLUSIVE.

C THE PROVISIONS AS TO TYPE, DENOMINATION, SECURITY, REGISTRABILITY AND PLACE OF PAYMENT APPLICABLE TO THE SERIES A AND B BONDS ARE AS FOLLOWS

1 TYPE NEGOTIABLE, SERIAL, COUPON BONDS.

2 DENOMINATION $ 1,000 HOWEVER, UNTIL SUCH TIME AS THE PURCHASERS OF THE BONDS REQUEST THE PREPARATION OF THE DEFINITIVE BONDS, A SINGLE BOND OR BONDS SHALL BE ISSUED IN AN AMOUNT EQUAL TO THE BONDS CONTRACTED FOR BY SAID PURCHASER OR PURCHASERS.

3 SECURITY. A GENERAL OBLIGATION OF THE BORROWER ADDITIONALLY SECURED BY

1. A FIRST MORTGAGE ON THE ENTIRE CAMPUS OF BISHOP COLLEGE LOCATED AT DALLAS, TEXAS, INCLUDING THE PROJECT FACILITIES AND OTHER FACILITIES THEREON AND TO BE CONSTRUCTED THEREON SAVE AND EXCEPT FOR AN UNDEVELOPED TRACT OF SIX ACRES
P MORE OR LESS, TO BE DESIGNATED BY THE BORROWER . SAID CAMPUS INCLUDES APPROXIMATELY 95.5 ACRES.

11. A FIRST LIEN ON AND PLEDGE OF THE NET REVENUES DERIVED FROM THE OPERATION AND/OR OWNERSHIP OF THE PROJECT DORMITORY, THE PROJECT STUDENT AND FACULTY APARTMENTS, THE EXISTING TWO DORMITORIES COMBINED NORMAL CAPACITY

APPROXIMATELY 260 STUDENTS , THE EXISTING FACULTY APARTMENTS ONE BUILDING - 14 APARTMENTS , AND THE EXISTING DINING HALL STUDENT CENTER INCLUDING THE PROJECT ADDITION THERETO AND,

111. A PLEDGE OF STUDENT TUITION FEES AND CHARGES SUFFICIENT, TOGETHER WITH OTHER PLEDGED REVENUES, TO MEET ALL DEBT SERVICE AND RESERVE REQUIREMENTS.

4 REGISTRABILITY REGISTRABLE AS TO PRINCIPAL ONLY.

5 PLACE AND MEDIUM OF PAYMENT PAYABLE AS TO BOTH PRINCIPAL AND INTEREST AT THE PRINCIPAL OFFICE OF THE TRUSTEE TO BE DESIGNATED IN THE INDENTURE, OR AT THE OPTION OF THE HOLDER, AT A BANK OR TRUST COMPANY IN THE BOROUGH OF MANHATTAN, CITY AND STATE OF NEW YORK, IN ANY COIN OR CURRENCY WHICH, ON THE RESPECTIVE DATES OF PAYMENT OF SUCH PRINCIPAL AND INTEREST, IS LEGAL TENDER FOR PAYMENT OF DEBTS DUE THE UNITED STATES OF AMERICA.

SECTION 3. SALE OF BONDS. THE SERIES B BONDS WILL BE SOLD BY THE BORROWER AT PUBLIC SALE, THE CALL FOR BIDS SPECIFYING THAT BIDS WILL BE RECEIVED AND CONSIDERED ON THE FOLLOWING BASIS

A. $ 140,000 MATURING APRIL 1, 1966, THROUGH APRIL 1, 1973
B. 110,000 MATURING APRIL 1, 1974, THROUGH APRIL 1, 1978
C. 130,000 MATURING APRIL 1, 1979, THROUGH APRIL 1, 1983
D. 155,000 MATURING APRIL 1, 1984, THROUGH APRIL 1, 1988
E. 185,000 MATURING APRIL 1, 1989, THROUGH APRIL 1, 1993
F. 215,000 MATURING APRIL 1, 1994, THROUGH APRIL 1, 1998
G. 265,000 MATURING APRIL 1, 1999, THROUGH APRIL 1, 2003 AND
H. 1,200,000 MATURING APRIL 1, 1966, THROUGH APRIL 1, 2003.

IN THE EVENT ANY OF THE SERIES B BONDS ARE AWARDED TO THE GOVERNMENT, THE BORROWER SHALL, WHEN THEY ARE READY, DELIVER ALL SUCH BONDS TO THE GOVERNMENT AT SUCH TIME AS THE GOVERNMENT SHALL DESIGNATE.

THE GOVERNMENT WILL SUBMIT ITS BID FOR THE SERIES B BONDS AND SUCH BID WILL BE FOR ALL OF THE BONDS AT THEIR PAR VALUE, PLUS ACCRUED INTEREST, AT THE RATE OF THREE AND ONE HALF PER CENTUM 3-1/2(PER ANNUM ON ALL OR ANY ONE OR MORE OF THE ABOVE BLOCKS OF BONDS. IN THE EVENT ANY OTHER BIDDER OR BIDDERS OFFER TO PURCHASE ALL OF THE BONDS, OR ANY PORTION OF THE BONDS IN BLOCKS AS SPECIFIED AT AN INTEREST COST OF NOT MORE THAN THREE AND ONE HALF PER CENTUM 3-1/2(PER ANNUM, THE BONDS OR ANY SUCH PORTION THEREOF SHALL BE SOLD TO SUCH BIDDER OR BIDDERS. IN THE EVENT OF A SALE OF ALL THE SERIES B BONDS TO A PURCHASER OR PURCHASERS OTHER THAN THE GOVERNMENT, THIS

AGREEMENT SHALL TERMINATE EXCEPT WITH RESPECT TO OBLIGATIONS HEREUNDER BETWEEN THE BORROWER AND THE GOVERNMENT AS OF THE DATE OF SUCH SALE OF THE BONDS. IN THE EVENT ANY OF THE BONDS ARE AWARDED TO THE GOVERNMENT, IT IS AGREED THAT THE OBLIGATIONS HEREUNDER SHALL CONTINUE IN THE SAME MANNER AS IF ALL THE BONDS WERE SOLD TO THE GOVERNMENT. IN THE EVENT NO BID IS RECEIVED FROM A BIDDER OR BIDDERS OTHER THAN THE GOVERNMENT WITHIN THE TERMS HEREIN SPECIFIED, ALL THE BONDS SHALL BE SOLD TO THE GOVERNMENT.

THE BORROWER AT THE OPTION OF THE PURCHASER S SHALL ISSUE SUNGLE BONDS WITH FACE VALUES IN THE AMOUNT OF THE RESPECTIVE PURCHASES IN LIEU OF INDIVIDUAL DENOMINATION BONDS. ALL SUCH SINGLE BONDS SHALL BE REGISTERED AS TO PRINCIPAL AND INTEREST AND PAYABLE AS DIRECTED BY THE PURCHASERS, BUT OTHERWISE COMPLYING WITH THE DESCRIPTIONS SET FORTH IN SECTION 2 HEREOF. THE BORROWER SHALL COVENANT THAT, UPON REQUEST OF THE HOLDER OF A SINGLE BOND, IT SHALL ISSUE, AT ITS OWN EXPENSE AND WITHIN 90 DAYS FROM THE DATE OF SUCH REQUEST, NEGOTIABLE BEARER COUPON BONDS IN DENOMINATIONS OF $ 1,000 , AS DESCRIBED IN SECTION 2 HEREOF, IN AGGREGATE AMOUNT EQUAL TO THE AMOUNT OF THE SINGLE BOND STILL OUTSTANDING. THE PRINTING OF TEXT OF SINGLE BONDS SHALL BE OF TYPE COMPOSITION ON PAPER OF SUFFICIENT WEIGHT AND STRENGTH TO PREVENT DETERIORATION THROUGHOUT THE LIFE OF THE LOAN. THE BONDS SHALL CONFORM IN SIZE TO STANDARD PRACTICE AND CONTAIN THE APPROVED MATURITY SCHEDULE FOR PAYMENT OF PRINCIPAL.

SECTION 4. DESCRIPTION OF THE PROJECT. THE PROJECT SHALL CONSIST OF

UNIT A A NEW DORMITORY FOR APPROXIMATELY 218 MEN STUDENTS AND TWO SUPERVISORS
UNIT B ADDITION AND REMODELING OF EXISTING DINING FACILITY TO PROVIDE FOR 350 ADDITIONAL STUDENTS AND
UNIT C THREE NEW APARTMENT BUILDINGS TO HOUSE APPROXIMATELY 25 STUDENT FAMILIES AND 23 FACULTY MEMBERS
HEREIN CALLED THE PROJECT

SECTION 5. GOVERNMENT FIELD EXPENSE. THE AMOUNT OF THE FIXED FEE FOR GOVERNMENT S FIELD EXPENSE REFERRED TO IN SECTION 30 OF THE ATTACHED TERMS SECTION 6. SPECIAL CONDITIONS. THE GOVERNMENT S OBLIGATION TO PURCHASE AND CONDITIONS SHALL BE $ 5,400 .

THE BONDS OF THE BORROWER IS ALSO SUBJECT TO THE SPECIAL CONDITIONS ATTACHED HERETO AND MADE A PART HEREOF AS EXHIBIT B.

SECTION 7. NON-DESCRIMINATION. THIS AGREEMENT IS SUBJECT TO THE PROVISIONS OF THE EXECUTIVE ORDER 11063 DATED NOVEMBER 20, 1962. THE BORROWER COVENANTS AND AGREES THAT IT WILL NOT DISCRIMINATE NOR PERMIT DISCRIMINATION BY ITS AGENTS, LESSEES OR ANY OTHERS OPERATING HOUSING AND

RELATED FACILITIES IN THE USE OR OCCUPANCY OF SAID FACILITIES BECAUSE OF RACE, COLOR, CREED, OR NATIONAL ORIGIN.

IN WITNESS WHEREOF, THIS AGREEMENT HAS BEEN EXECUTED IN THE NAME OF BISHOP COLLEGE BY THE UNDERSIGNED OFFICIAL, AND UNDER ITS OFFICIAL SEAL, ATTESTED BY ITS SECRETARY, AND IN THE NAME AND ON BEHALF OF THE UNITED STATES OF AMERICA, HOUSING AND HOME FINANCE ADMINISTRATOR, COMMUNITY FACILITIES COMMISSIONER, BY THE UNDERSIGNED OFFICIAL.

BY

PRESIDENT, BOARD OF TRUSTEES

ATTEST

TYPE OR PRINT NAME OF SIGNING OFFICER

ASS T. SECRETARY, BOARD OF TRUSTEES

TYPE OR PRINT NAME OF SIGNING OFFICER

UNITED STATES OF AMERICA
HOUSING AND HOME FINANCE ADMINISTRATOR
COMMUNITY FACILITIES COMMISSIONER

DATE

BY

REGIONAL DIRECTOR

Stage II Program C

Amortization Schedule

BISHOP'S COLLEGE 44171

DALLAS, TEXAS

$1,200,000 - 40 YEARS AT 3.50 PERCENT

YEAR	BONDS OUT.	ANNUAL INTEREST	PRINCIPAL MAT.	TOTAL
1964	1200	$42,000	00	$42,000
1965	1200	42,000	00	42,000
1966	1200	42,000	17	59,000
1967	1183	41,405	17	58,405
1968	1166	40,810	18	58,810
1969	1148	40,180	18	58,180
1970	1130	39,550	19	58,550
1971	1111	38,885	20	58,885
1972	1091	38,185	20	58,185
1973	1071	37,485	20	57,485
1974	1051	36,785	21	57,785
1975	1030	36,050	21	57,050
1976	1009	35,315	22	57,315
1977	987	34,545	23	57,545
1978	964	33,740	24	57,740
1979	940	32,900	24	56,900
1980	916	32,060	25	57,060
1981	891	31,185	26	57,185
1982	865	30,275	27	57,275
1983	838	29,330	28	57,330
1984	810	28,350	29	57,350
1985	781	27,335	30	57,335
1986	751	26,285	31	57,285
1987	720	25,200	32	57,200
1988	688	24,080	33	57,080
1989	655	22,925	34	56,925
1990	621	21,735	35	56,735
1991	586	20,510	37	57,510
1992	549	19,215	38	57,215
1993	511	17,885	39	56,885
1994	472	16,520	40	56,520
1995	432	15,120	42	57,120
1996	390	13,650	43	57,650
1997	347	12,145	45	57,145
1998	302	10,570	46	56,570
1999	256	8,960	48	56,960
2000	208	7,280	49	56,280
2001	159	5,565	51	56,565
2002	108	3,780	53	66,780
2003	55	1,925	55	56,925

Stage III Program A

Pre Construction

HOUSING AND HOME FINANCE AGENCY

COMMUNITY FACILITIES ADMINISTRATION

COLLEGE HOUSING PROGRAM

PROJECT SUMMARY AND APPROVAL

PROJECT NO. M489326

RELEASE DATE 15 SEPT 1969

APPLICANT NAME THIS IS FOR TESTING PURPOSES ONLY

ADDRESS SAME AS APPLIES FOR THE ABOVE LINE

BRIEF PROJECT DESCRIPTION

T T

E E

S S

T T

METHOD OF FINANCING	AMT OF LOAN	APP FUNDS	TOTAL EST COST
B. RELATED SERVICE FACILITIES	$.02	$41.00	$1,110,000.01
C. SUBTOTAL-A PLUS B	$.03	$1,000.39	$47,619,234.58
D. OTHER SERVICE FACILITIES	$.04	$810.10	$1,000,010.11
E. TOTAL PROJECT COST	$.05	$7,008,040.00	$99,999.99

TERM OF FEDERAL LOAN 99 YEARS AT 040 PERCENT INTEREST.

ESTIMATED COST OF FURNISHINGS AND MOVABLE EQUIPMENT $1,234.09

CONSTRUCTION SUMMARY

PROJECT COST ESTIMATED

CONSTRUCTION	$10,001,003.18
ARCHITECTURAL ENGINEERING SERVICES	$403.14
LEGAL EXPENSE	$505,054.53
INTEREST DURING CONSTRUCTION	$60,061.61

GOVERNMENT FIELD EXPENSE	$6,000,001.71
TOTAL PROJECT COST	$129.95

CONSTRUCTION COST ANALYSIS

BUILDING	$33,339.16
SITE IMPROVEMENTS	$33,033,031.05
UTILITY CONNECTIONS	$1.24
FIXED EQUIPMENT	$9,898.99
CONTINGENCIES	$11.11

COST STATISTICS	COST PER SQ FT	COST PER STUDENT
BUILDING ONLY	$10.54	$1.88
TOTAL PROJECT	$155.55	$.01

SPACE DISTRIBUTION	SQ FEET	PERCT TOT SPACE
A. REVENUE-PRODUCING SPACE		
DINING	4110	(
TOTAL REVENUE-PRODUCING SPACE	1000	(
B. ALL OTHER SPACE		
IMPROVED SPACE	2100	(
GRAND TOTAL	8704	(

STATUS OF SITE ACQUISITION

ESTIMATED PERIOD FROM APPROVAL TO START OF CONSTRUCTION.....99 MONTHS.

ESTIMATED CONSTRUCTION PERIOD....999 MONTHS.

Stage IV Program A

Construction

(Same as Stage II Program B)

Stage V Program A

Audit

STPRJ	M+O	LAND	BLDG	ENG. DATA ARKANSAS	01
04100	12000	100000	250000		
04101	12000	100000	250000		
04102	12000	100000	250000		
04103	12000	100000	250000		
04104	12000	100000	250000		
04105	12000	100000	250000		
04106	12000	100000	250000		
04107	12000	100000	250000		
04108	5000		150000		
04109	5000		150000		
04110	5000		150000		
04111	5000		150000		
04112	5000		150000		
04113	5000		150000		

M+O	$126,000	LAND	$800,000	BLDG	$2,900,000

STPRJ	M+O	LAND	BLDG	ENG. DATA ARKANSAS	02

******** GRAND TOTALS ********

$126,000	$800,000	$2,900,000

STPRJ	M+O	LAND	BLDG	ENG. DATA TEXAS	01
44101	2500	123456	300000		
44102	2500	123456	300000		
44103	2500	123456	300000		
44104	2500	123456	300000		
44105	2500	123456	300000		
44106	2500	123456	300000		
44107	2500	123456	300000		
44108	2500	123456	300000		
44109	2500	123456	300000		
44110	2500	123456	300000		
44111	18500	678999	450000		
44112	18500	678999	450000		
44113	18500	678999	450000		
44114	18500	678999	450000		
44115	18500	678999	450000		
44116	18500	678999	450000		

M+O	$136,000	LAND	$5,308,554	BLDG	$5,700,000

STPRJ	M+O	LAND	BLDG	ENG. DATA TEXAS	02
44117	18500	678999	450000		
44118	18500	678999	450000		
44119	18500	678999	450000		
44120	18500	678999	450000		
44121	6000	78000	300000		
44121	6000	78000	300000		
44122	6000	78000	300000		
44123	6000	78000	300000		
44124	6000	78000	300000		
44125	6000	78000	300000		
44126	6000	78000	300000		
44127	6000	78000	300000		
44128	6000	78000	300000		
44129	6000	78000	300000		
44130	6000	78000	300000		

M+O	$140,000	LAND	$3,573,996	BLDG	$5,100,000

STPRJ	M+O	LAND	BLDG	ENG. DATA TEXAS	03
			******** GRAND TOTALS ********		
		$276,000		$8,882,550	$10,800,000

Stage VI Program A

Loan Management Report

QUARTER ENDING JUN 30, 1965

HOUSING AND HOME FINANCING AGENCY
COMMUNITY FACILITIES ADMINISTRATION

QUARTERLY LOAN MANAGEMENT REPORT — REGION V

	ARA	CH	PFL	TOTAL
1. NUMBER OF LOANS UNDER LOAN MANAGEMENT		19		1
2. NUMBER OF LOANS IN GROUP I		13		1
3. NUMBER OF LOANS IN GROUP II		6		
4. NUMBER OF GROUP II LOANS IN DEFAULT		6		
5. NUMBER OF DELINQUENT REPORTS OF INITIAL COMPLIANCE		6		
6. NUMBER OF DELINQUENT LOAN MANAGEMENT REPORTS		10		1
7. NUMBER OF INITIAL CONFERENCES HELD DURING QUARTER		10		1
8. NUMBER OF PROJECTS VISITED DURING QUARTER		7		

9. ATTACH A BRIEF STATEMENT ON EACH LOAN IN GROUP II, SHOWING CURRENT STATUS AS WELL AS THE ACTION BEING TAKEN TO CORRECT THE DIFFICULTY

10. COMMENTS

_____ _____
CHIEF, LOAN MANAGEMENT BRANCH DATE

_____ _____
REGIONAL DIRECTOR OF COMMUNITY FACILITIES DATE

PROJECTS

26123
26125
26127
26128
26129
26130

BLOCK DIAGRAMS

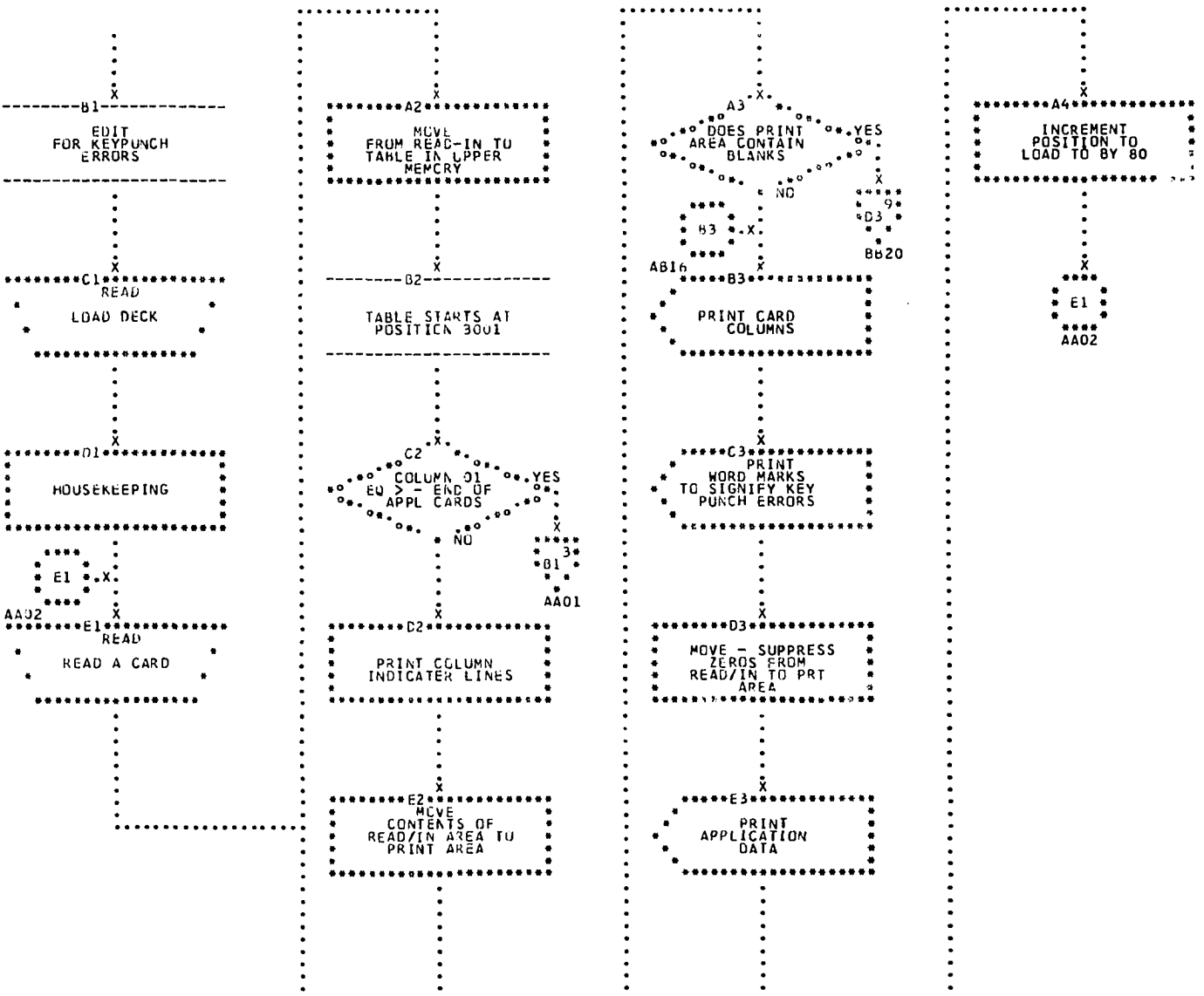
B1
EDIT FOR KEYPUNCH ERRORS
C1
READ
LOAD DECK
D1
HOUSEKEEPING
E1
AA02
E1
READ
READ A CARD
A2
MOVE FROM READ-IN TO TABLE IN UPPER MEMORY
B2
TABLE STARTS AT POSITION 3001
C2
COLUMN 01 EQ > - END OF APPL CARDS
YES
NO
3
B1
AA01
D2
PRINT COLUMN INDICATER LINES
E2
MOVE CONTENTS OF READ/IN AREA TO PRINT AREA
A3
DOES PRINT AREA CONTAIN BLANKS
YES
NO
9
D3
B3
AB16
BB20
B3
PRINT CARD COLUMNS
C3
PRINT WORD MARKS TO SIGNIFY KEY PUNCH ERRORS
D3
MOVE - SUPPRESS ZEROS FROM READ/IN TO PRT AREA
E3
PRINT APPLICATION DATA
A4
INCREMENT POSITION TO LOAD TO BY 80
E1
AA02

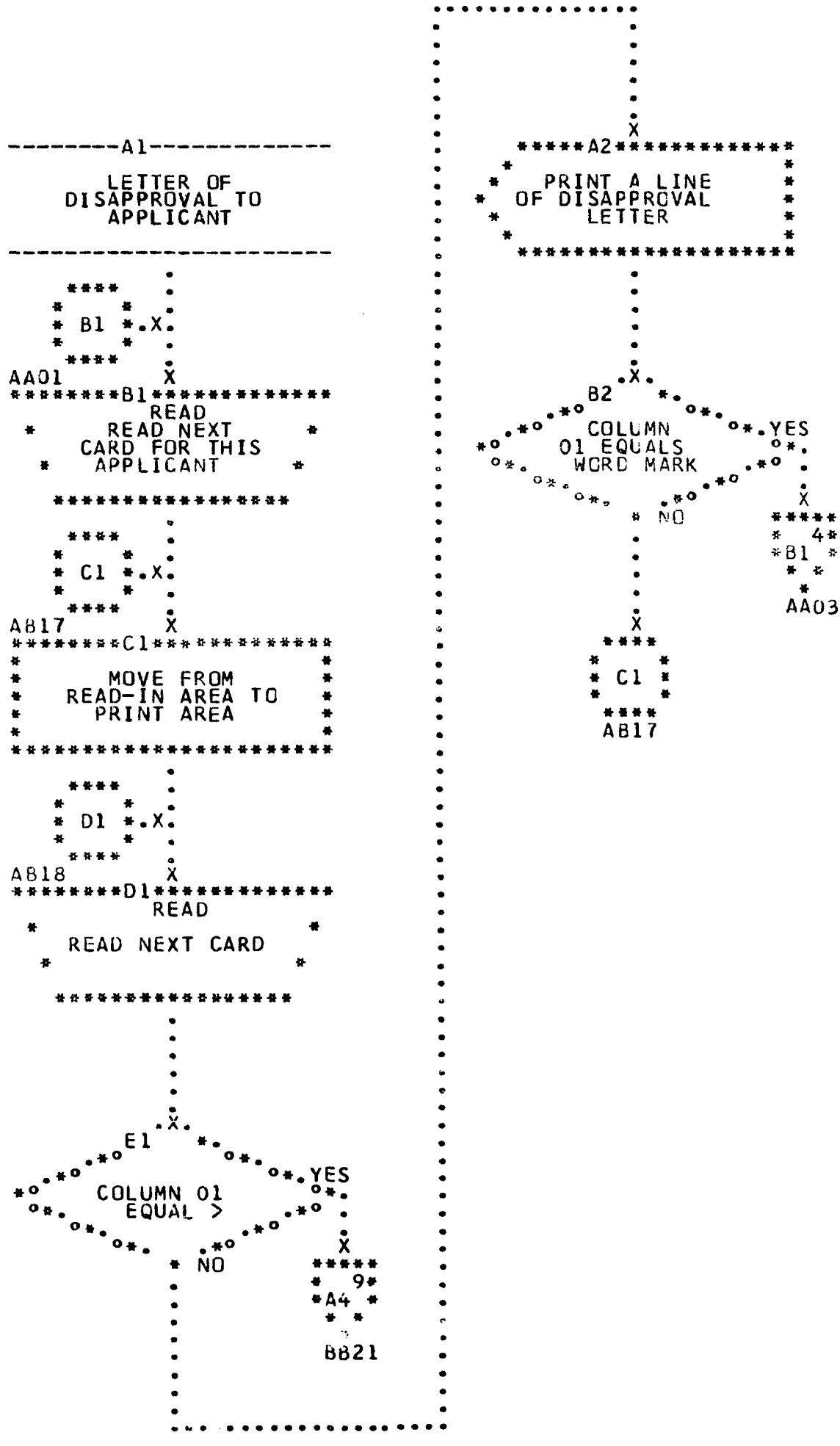
A1
LETTER OF DISAPPROVAL TO APPLICANT
B1
AA01
B1
READ
READ NEXT CARD FOR THIS APPLICANT
C1
AB17
C1
MOVE FROM READ-IN AREA TO PRINT AREA
D1
AB18
D1
READ
READ NEXT CARD
E1
COLUMN 01 EQUAL >
NO
YES
9
A4
BB21
A2
PRINT A LINE OF DISAPPROVAL LETTER
B2
COLUMN 01 EQUALS WORD MARK
NO
YES
4
B1
AA03
C1
AB17

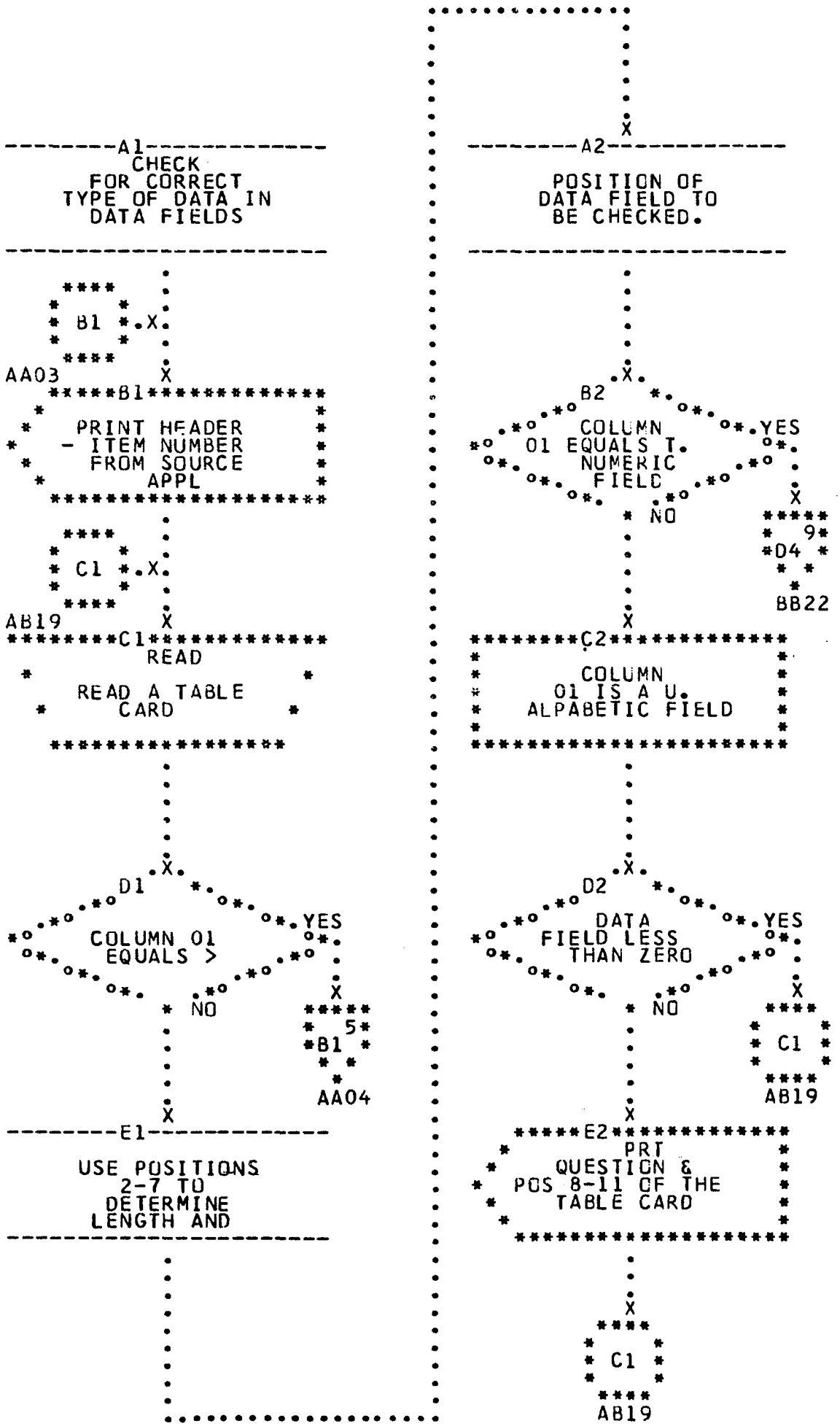
A1
CHECK FOR CORRECT TYPE OF DATA IN DATA FIELDS
A2
POSITION OF DATA FIELD TO BE CHECKED.
B1
PRINT HEADER - ITEM NUMBER FROM SOURCE APPL
AA03
B2
COLUMN 01 EQUALS T. NUMERIC FIELD
YES
NO
9
D4
BB22
C1
AB19
C1
READ
READ A TABLE CARD
C2
COLUMN 01 IS A U. ALPABETIC FIELD
D1
COLUMN 01 EQUALS >
YES
NO
5
B1
AA04
D2
DATA FIELD LESS THAN ZERO
YES
NO
C1
AB19
E1
USE POSITIONS 2-7 TO DETERMINE LENGTH AND
E2
PRT QUESTION & POS 8-11 OF THE TABLE CARD
C1
AB19

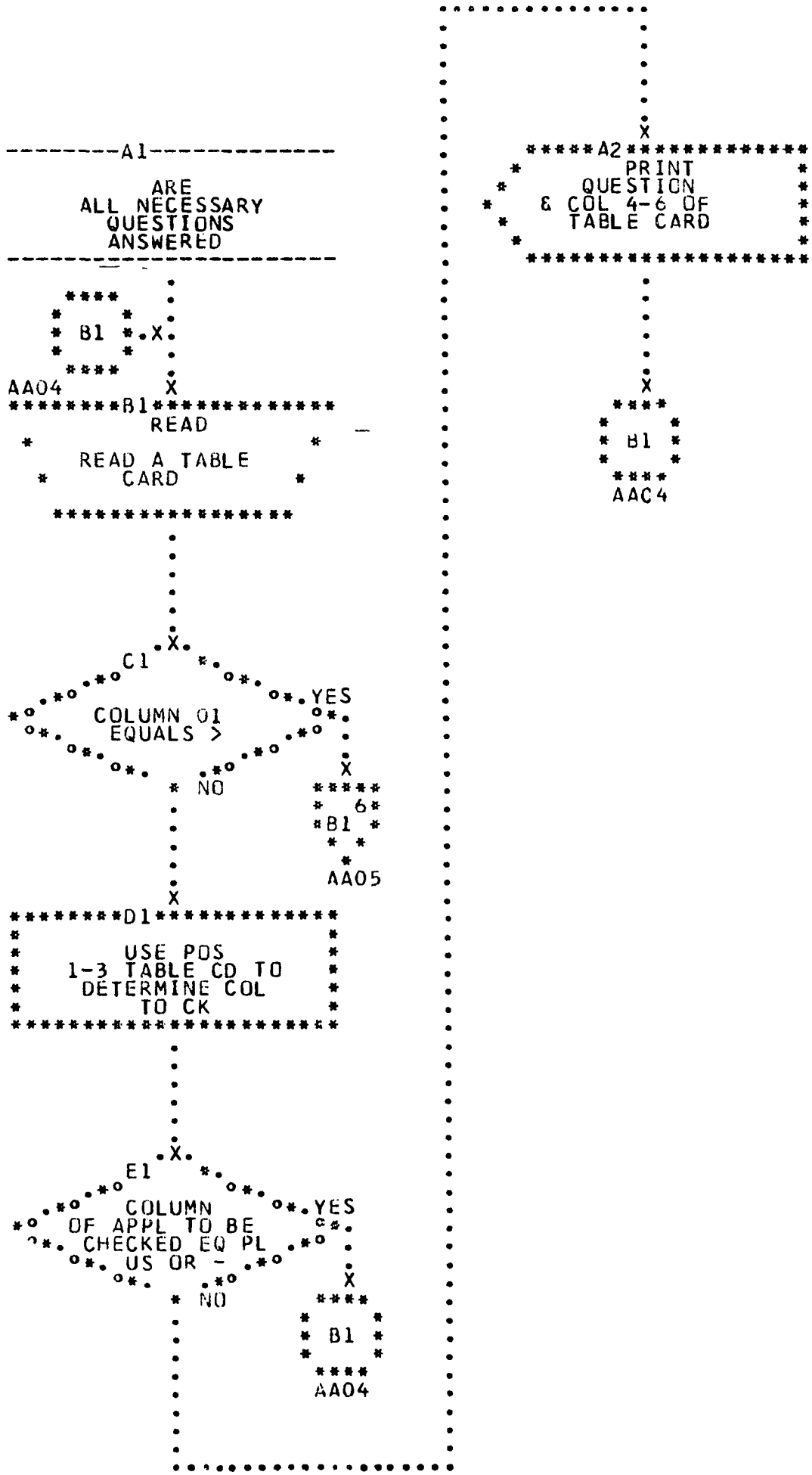
A1
ARE ALL NECESSARY QUESTIONS ANSWERED
B1
AA04
B1
READ
READ A TABLE CARD
C1
COLUMN 01 EQUALS >
YES
NO
6
B1
AA05
D1
USE POS 1-3 TABLE CD TO DETERMINE COL TO CK
E1
COLUMN OF APPL TO BE CHECKED EQ PL US OR -
YES
NO
B1
AA04
A2
PRINT QUESTION & COL 4-6 OF TABLE CARD
B1
AAC4

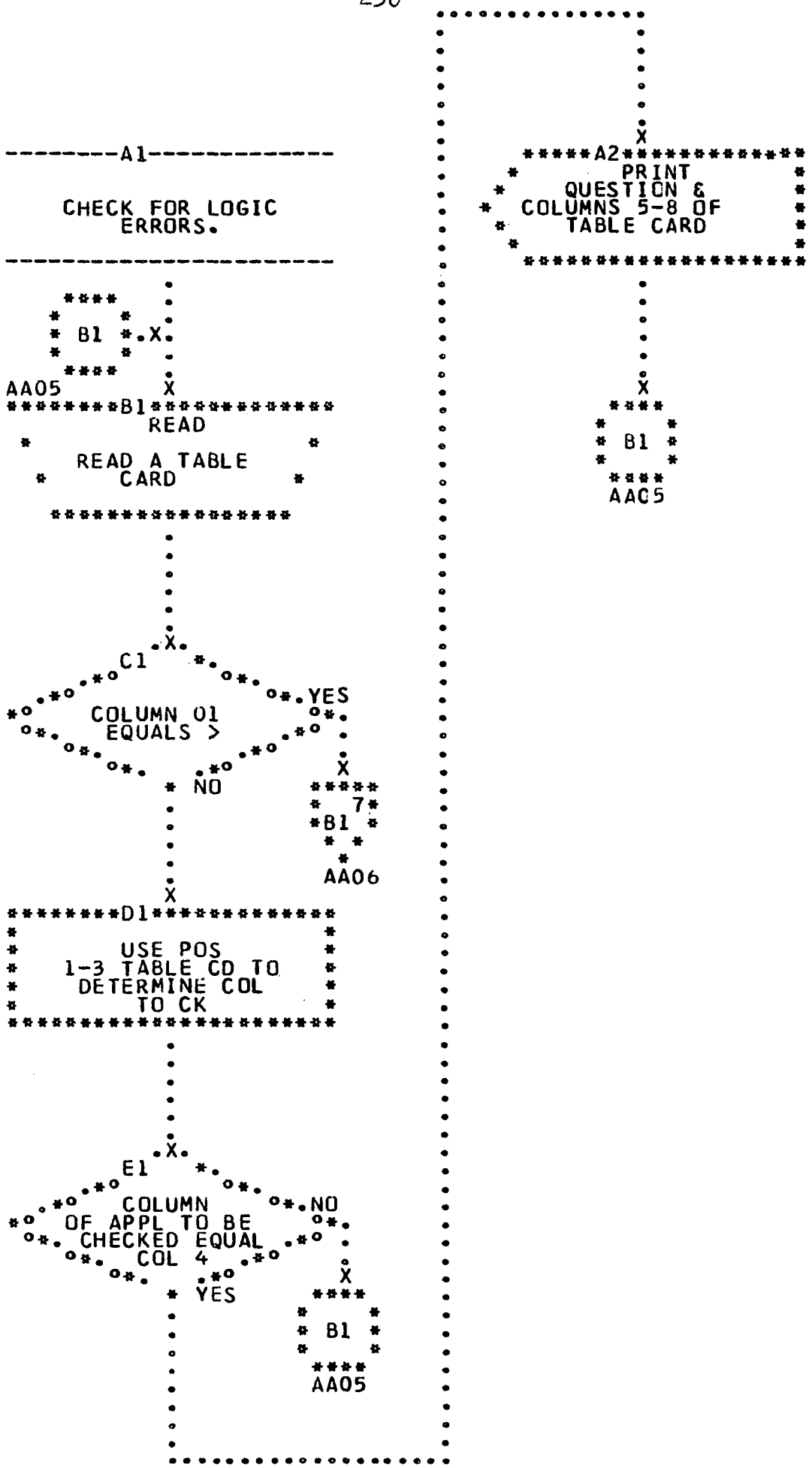
A1
CHECK FOR LOGIC ERRORS.
B1
READ
READ A TABLE CARD
C1
COLUMN 01 EQUALS >
NO
YES
7
B1
AA06
D1
USE POS 1-3 TABLE CD TO DETERMINE COL TO CK
E1
COLUMN OF APPL TO BE CHECKED EQUAL COL 4
NO
YES
B1
AA05
A2
PRINT QUESTION & COLUMNS 5-8 OF TABLE CARD
B1
AA05

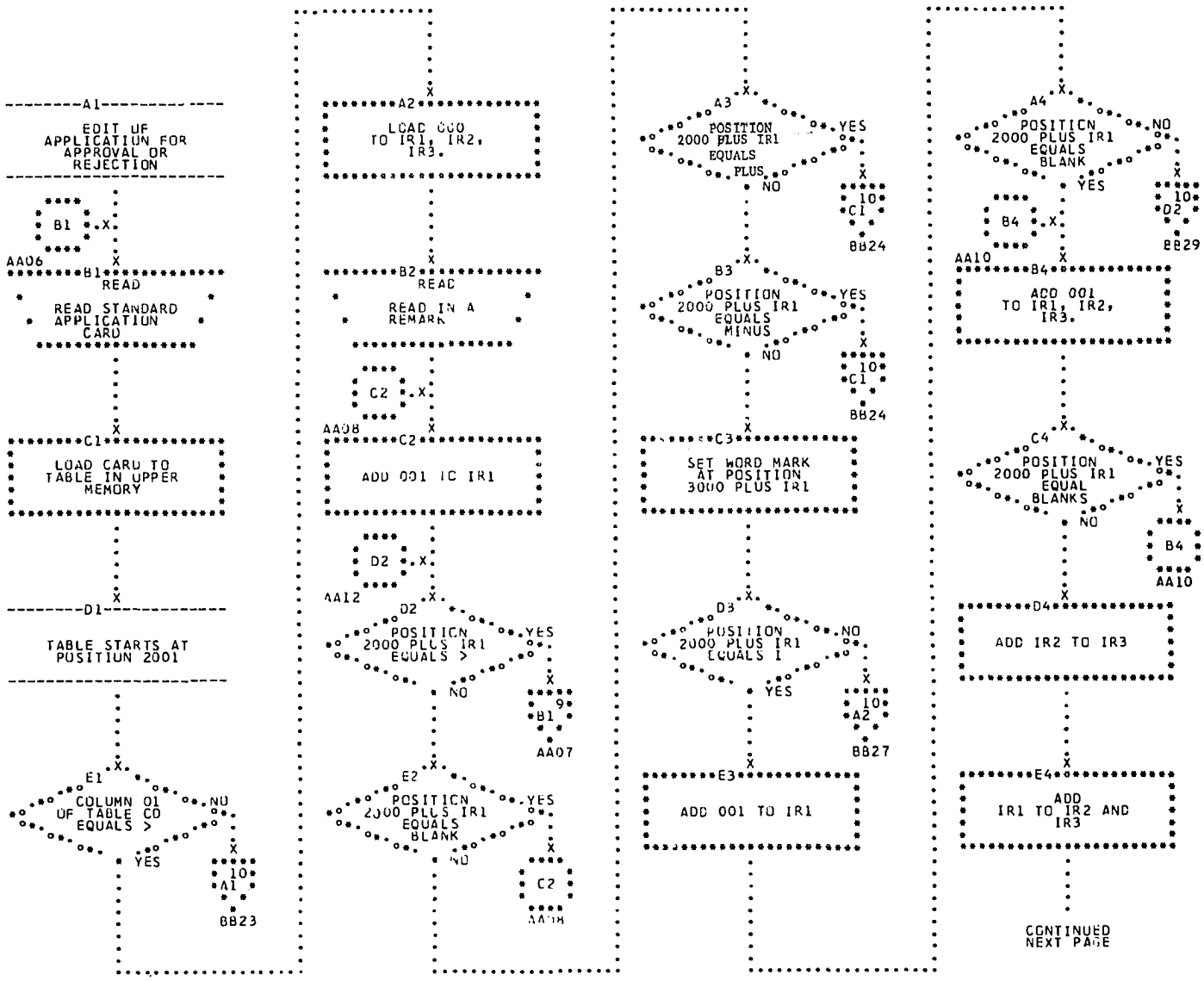
A1
EDIT UF APPLICATION FOR APPROVAL OR REJECTION
B1
AA06
B1
READ
READ STANDARD APPLICATION CARD
C1
LOAD CARD TO TABLE IN UPPER MEMORY
D1
TABLE STARTS AT POSITION 2001
E1
COLUMN 01 OF TABLE CO EQUALS >
YES
NO
10 A1
BB23
A2
LOAD 000 TO IR1, IR2, IR3.
B2
READ
READ IN A REMARK
C2
AA08
C2
ADD 001 TO IR1
D2
AA12
D2
POSITION 2000 PLUS IR1 EQUALS >
YES
NO
9 B1
AA07
E2
POSITION 2000 PLUS IR1 EQUALS BLANK
YES
NO
C2
AA08
A3
POSITION 2000 PLUS IR1 EQUALS PLUS
YES
NO
10 C1
BB24
B3
POSITION 2000 PLUS IR1 EQUALS MINUS
YES
NO
10 C1
BB24
C3
SET WORD MARK AT POSITION 3000 PLUS IR1
D3
POSITION 2000 PLUS IR1 EQUALS I
NO
YES
10 A2
BB27
E3
ADD 001 TO IR1
A4
POSITION 2000 PLUS IR1 EQUALS BLANK
NO
YES
10 D2
BB29
B4
AA10
B4
ADD 001 TO IR1, IR2, IR3.
C4
POSITION 2000 PLUS IR1 EQUAL BLANKS
YES
NO
B4
AA10
D4
ADD IR2 TO IR3
E4
ADD IR1 TO IR2 AND IR3
CONTINUED NEXT PAGE

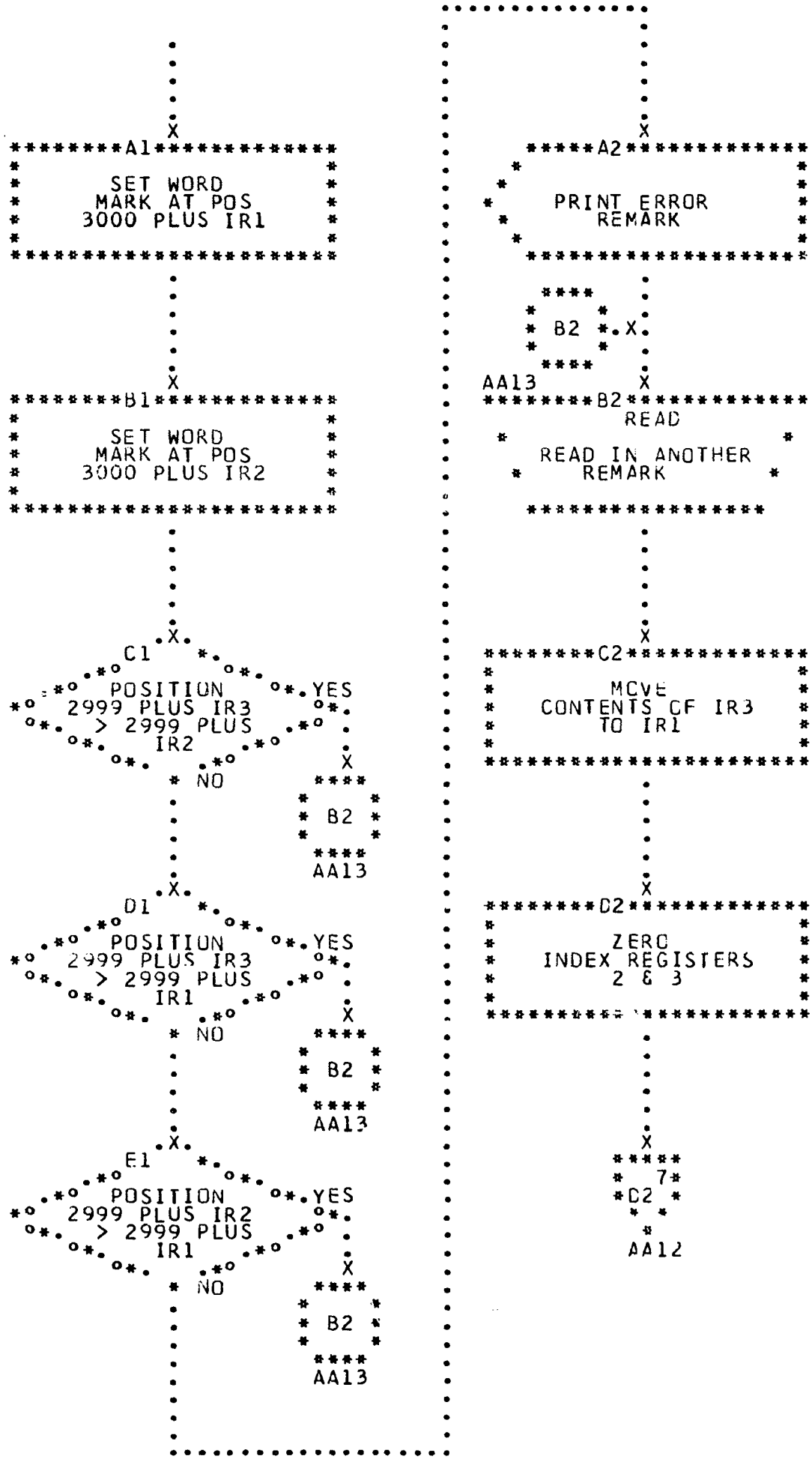
A1
SET WORD MARK AT POS 3000 PLUS IR1
B1
SET WORD MARK AT POS 3000 PLUS IR2
C1
POSITION 2999 PLUS IR3 > 2999 PLUS IR2
YES
NO
B2
AA13
D1
POSITION 2999 PLUS IR3 > 2999 PLUS IR1
YES
NO
B2
AA13
E1
POSITION 2999 PLUS IR2 > 2999 PLUS IR1
YES
NO
B2
AA13
A2
PRINT ERROR REMARK
B2
AA13
B2
READ
READ IN ANOTHER REMARK
C2
MOVE CONTENTS OF IR3 TO IR1
D2
ZERO INDEX REGISTERS 2 & 3
7
D2
AA12

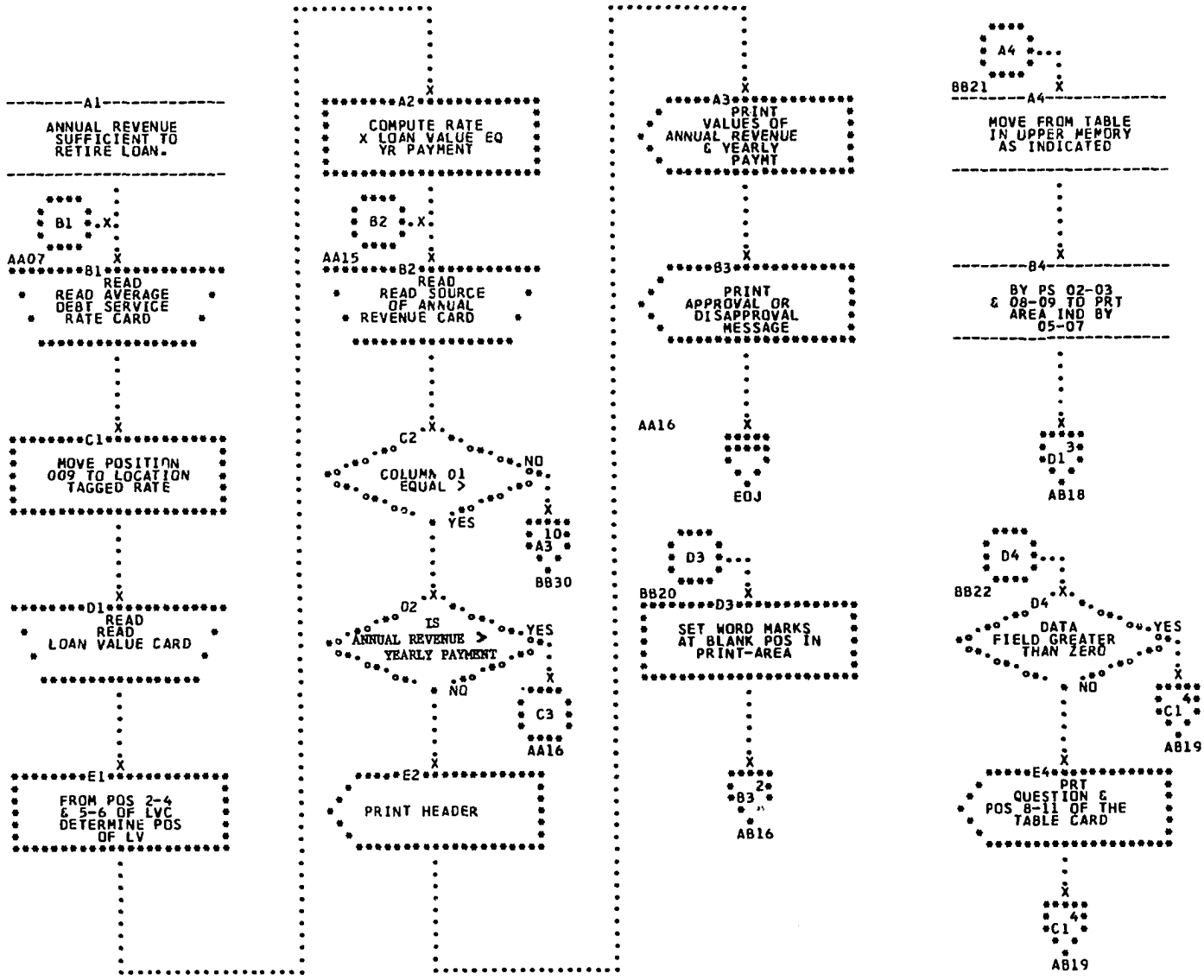
A1
ANNUAL REVENUE SUFFICIENT TO RETIRE LOAN.
B1
AA07
B1
READ
READ AVERAGE DEBT SERVICE RATE CARD
C1
MOVE POSITION 009 TO LOCATION TAGGED RATE
D1
READ
READ
LOAN VALUE CARD
E1
FROM POS 2-4 & 5-6 OF LVC DETERMINE POS OF LV
A2
COMPUTE RATE X LOAN VALUE EQ YR PAYMENT
B2
AA15
B2
READ
READ SOURCE OF ANNUAL REVENUE CARD
C2
COLUMN 01 EQUAL >
NO
YES
10
A3
BB30
D2
IS ANNUAL REVENUE > YEARLY PAYMENT
YES
NO
C3
AA16
E2
PRINT HEADER
A3
PRINT VALUES OF ANNUAL REVENUE & YEARLY PAYMT
B3
PRINT APPROVAL OR DISAPPROVAL MESSAGE
AA16
EOJ
D3
BB20
D3
SET WORD MARKS AT BLANK POS IN PRINT-AREA
2
B3
AB16
A4
BB21
A4
MOVE FROM TABLE IN UPPER MEMORY AS INDICATED
B4
BY PS 02-03 & 08-09 TO PRT AREA IND BY 05-07
3
D1
AB18
D4
BB22
D4
DATA FIELD GREATER THAN ZERO
YES
NO
4
C1
AB19
E4
PRT QUESTION & POS 8-11 OF THE TABLE CARD
4
C1
AB19

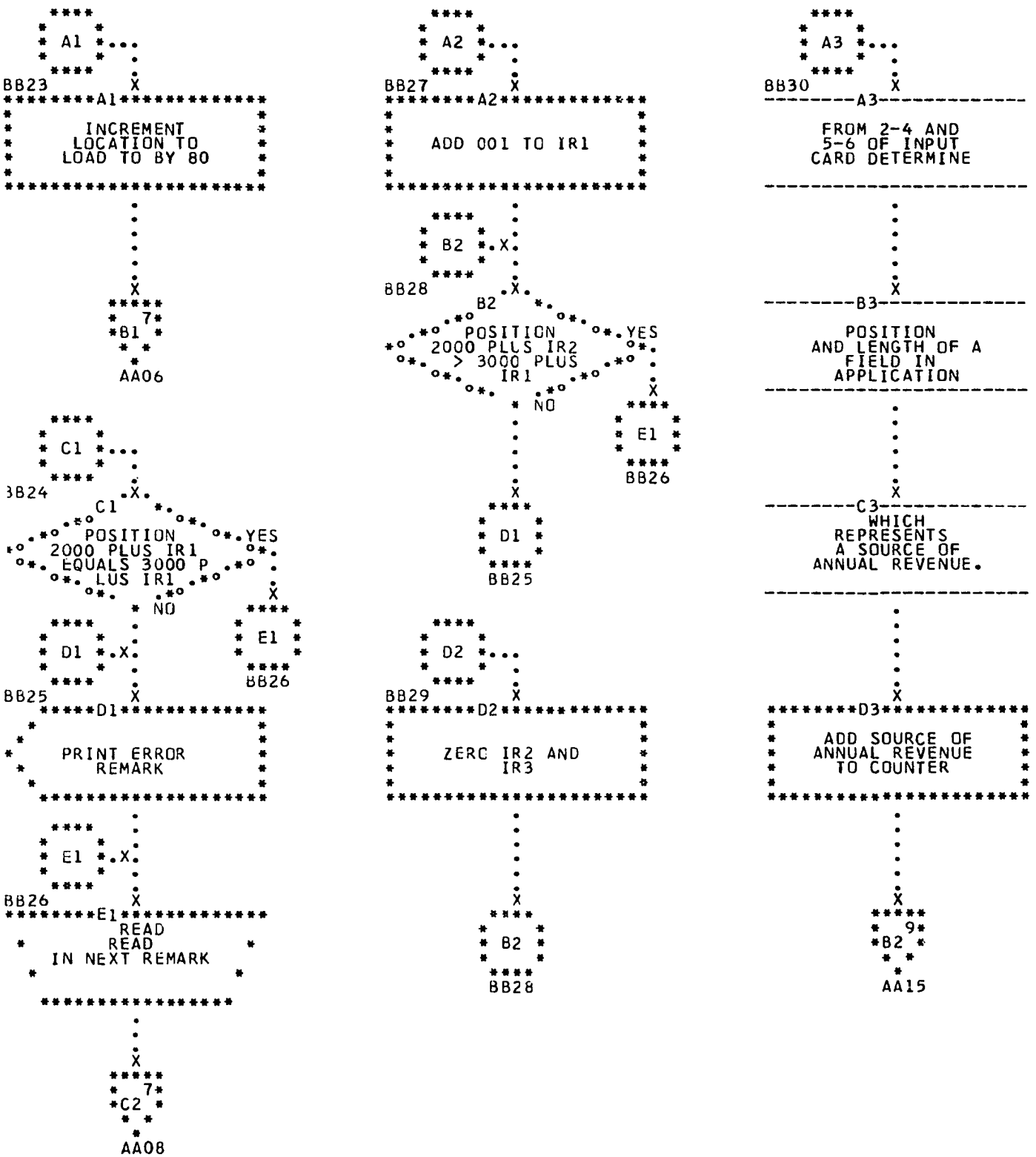
A1
BB23
A1
INCREMENT LOCATION TO LOAD TO BY 80
7
B1
AA06
A2
BB27
A2
ADD 001 TO IR1
B2
BB28
B2
POSITION 2000 PLUS IR2 > 3000 PLUS IR1
YES
NO
E1
BB26
D1
BB25
A3
BB30
A3
FROM 2-4 AND 5-6 OF INPUT CARD DETERMINE
B3
POSITION AND LENGTH OF A FIELD IN APPLICATION
C3
WHICH REPRESENTS A SOURCE OF ANNUAL REVENUE.
C1
BB24
C1
POSITION 2000 PLUS IR1 EQUALS 3000 PLUS IR1
YES
NO
D1
BB25
D1
PRINT ERROR REMARK
E1
BB26
E1
READ READ IN NEXT REMARK
7
C2
AA08
D2
BB29
D2
ZERC IR2 AND IR3
B2
BB28
D3
ADD SOURCE OF ANNUAL REVENUE TO COUNTER
9
B2
AA15

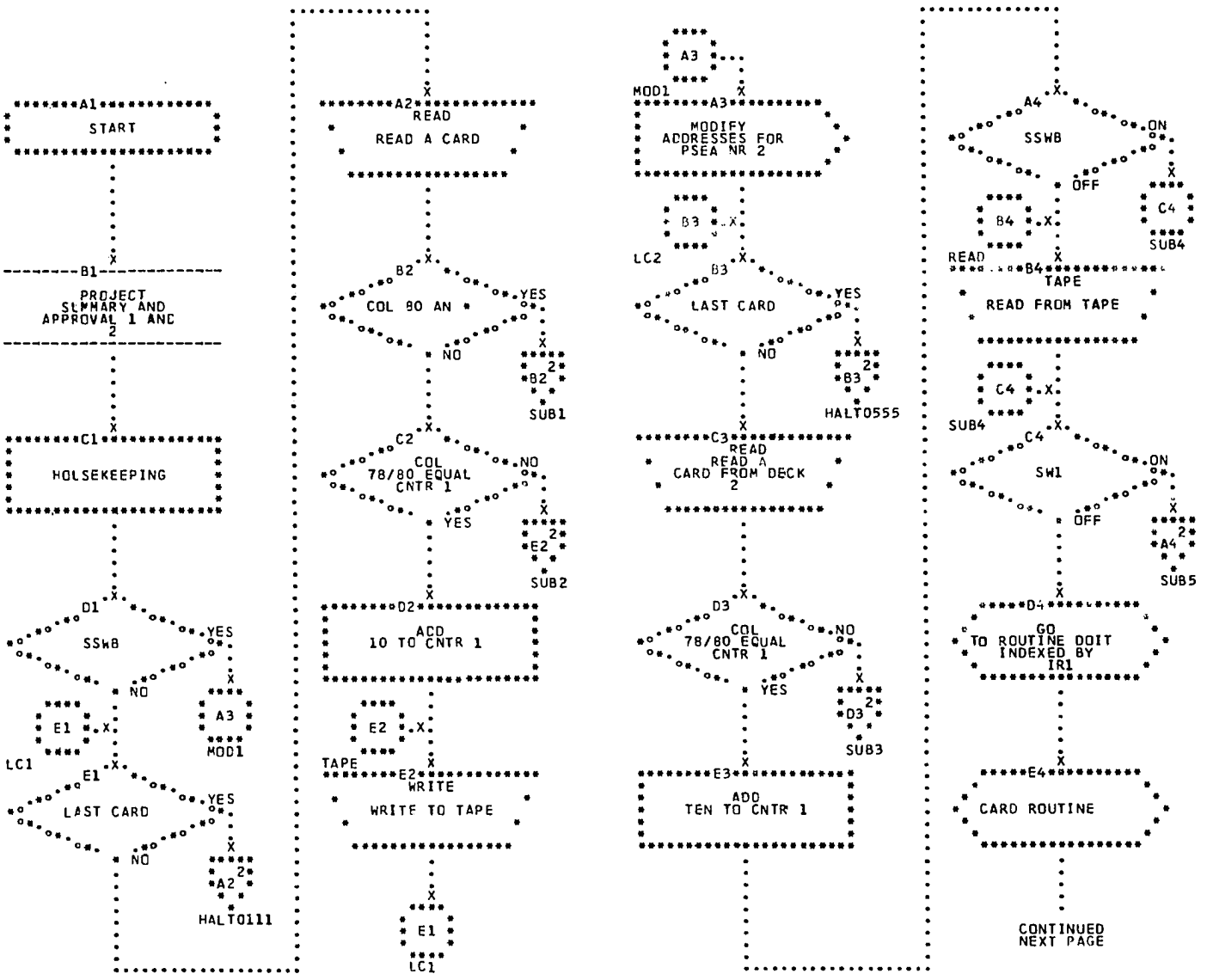
A1
START
B1
PROJECT SUMMARY AND APPROVAL 1 ANC 2
C1
HOUSEKEEPING
D1
SSWB
YES
NO
E1
A3
MOD1
LC1
E1
LAST CARD
YES
NO
2
A2
HALT0111
A2
READ
READ A CARD
B2
COL 80 AN
YES
NO
2
B2
SUB1
C2
COL 78/80 EQUAL CNTR 1
NO
YES
2
E2
SUB2
D2
ADD 10 TO CNTR 1
E2
TAPE
E2
WRITE
WRITE TO TAPE
E1
LC1
A3
MOD1
A3
MODIFY ADDRESSES FOR PSEA NR 2
B3
LC2
B3
LAST CARD
YES
NO
2
B3
HALT0555
C3
READ
READ A CARD FROM DECK 2
D3
COL 78/80 EQUAL CNTR 1
NO
YES
2
D3
SUB3
E3
ADD TEN TO CNTR 1
A4
SSWB
ON
OFF
B4
C4
SUB4
READ
B4
TAPE
READ FROM TAPE
C4
SUB4
C4
SW1
ON
OFF
2
A4
SUB5
D4
GO TO ROUTINE DOIT INDEXED BY IR1
E4
CARD ROUTINE
CONTINUED NEXT PAGE

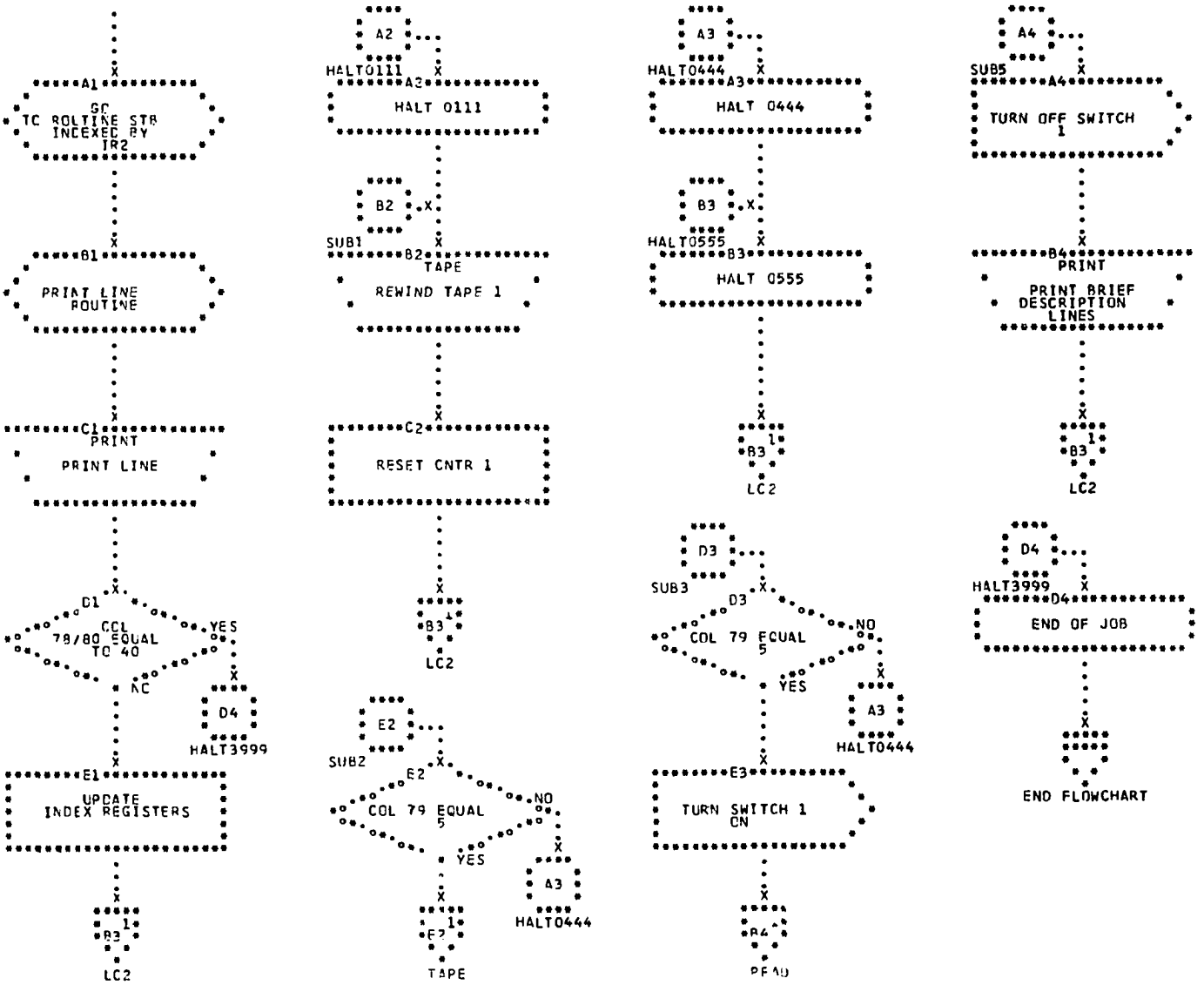
A1
GO
TO ROUTINE STR
INDEXED BY
IR2
B1
PRINT LINE
ROUTINE
C1
PRINT
PRINT LINE
D1
COL
78/80 EQUAL
TO 40
YES
NO
D4
HALT3999
E1
UPDATE
INDEX REGISTERS
B3
1
LC2
A2
HALT0111
A2
HALT 0111
B2
SUB1
B2
TAPE
REWIND TAPE 1
C2
RESET CNTR 1
B3
1
LC2
E2
SUB2
E2
COL 79 EQUAL
5
YES
NO
A3
HALT0444
E2
1
TAPE
A3
HALT0444
A3
HALT 0444
B3
HALT0555
B3
HALT 0555
B3
1
LC2
D3
SUB3
D3
COL 79 EQUAL
5
NO
YES
A3
HALT0444
E3
TURN SWITCH 1
ON
R4
READ
A4
SUB5
A4
TURN OFF SWITCH
1
B4
PRINT
PRINT BRIEF
DESCRIPTION
LINES
B3
1
LC2
D4
HALT3999
D4
END OF JOB
END FLOWCHART

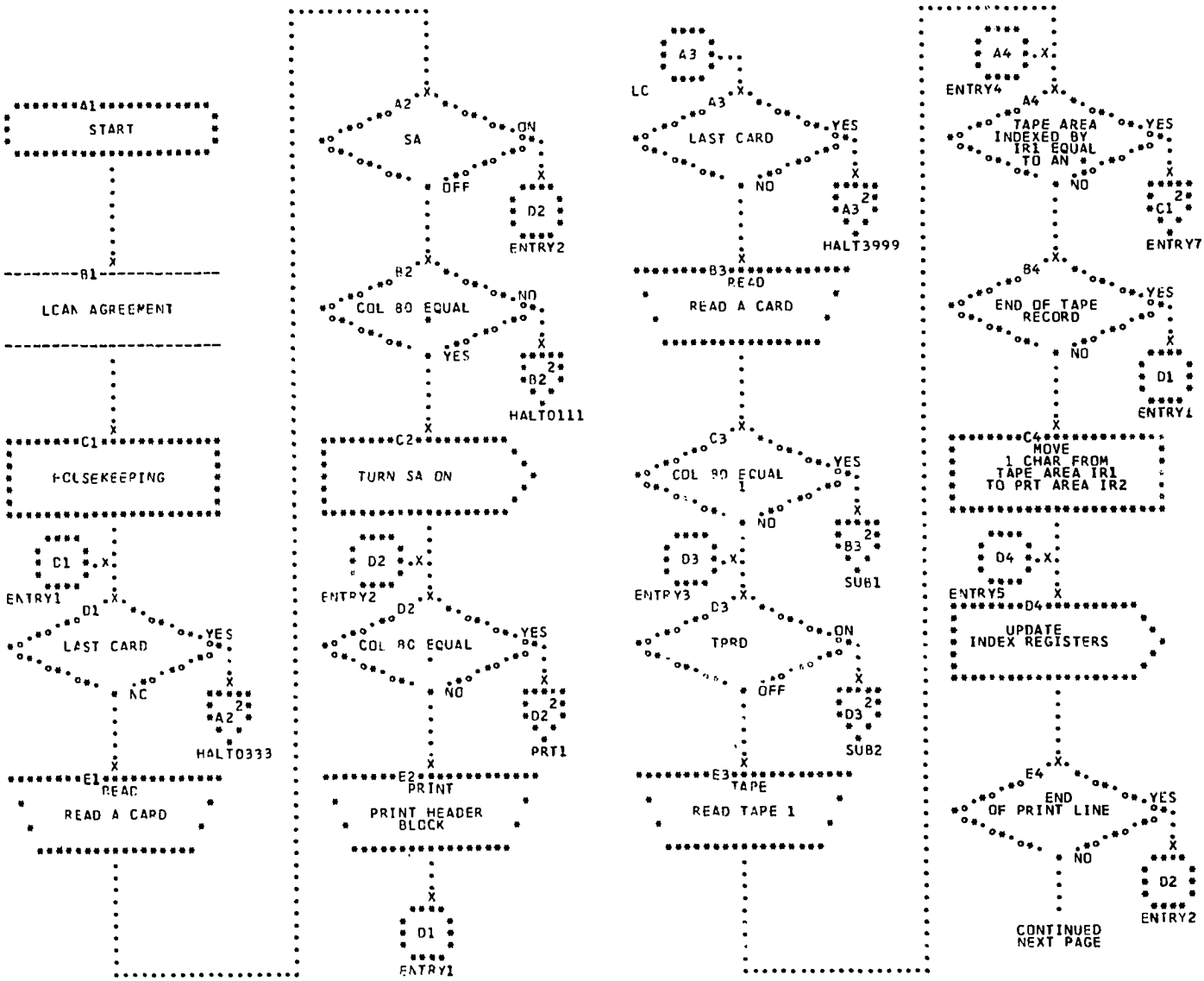
A1
START
B1
LOAN AGREEMENT
C1
HOUSEKEEPING
C1
ENTRY1
D1
LAST CARD
YES
NO
A2
HALT0333
E1
READ
READ A CARD
A2
SA
ON
OFF
D2
ENTRY2
B2
COL 80 EQUAL
NO
YES
B2
HALT0111
C2
TURN SA ON
D2
ENTRY2
D2
COL 80 EQUAL
YES
NO
D2
PRT1
E2
PRINT
PRINT HEADER BLOCK
D1
ENTRY1
A3
LC
A3
LAST CARD
YES
NO
A3
HALT3999
B3
READ
READ A CARD
C3
COL 80 EQUAL 1
YES
NO
B3
SUB1
D3
ENTRY3
D3
TPRD
ON
OFF
D3
SUB2
E3
TAPE
READ TAPE 1
A4
ENTRY4
A4
TAPE AREA INDEXED BY IR1 EQUAL TO AN
YES
NO
C1
ENTRY7
B4
END OF TAPE RECORD
YES
NO
D1
ENTRY1
C4
MOVE 1 CHAR FROM TAPE AREA IR1 TO PRT AREA IR2
D4
ENTRY5
D4
UPDATE INDEX REGISTERS
E4
END OF PRINT LINE
YES
NO
D2
ENTRY2
CONTINUED NEXT PAGE

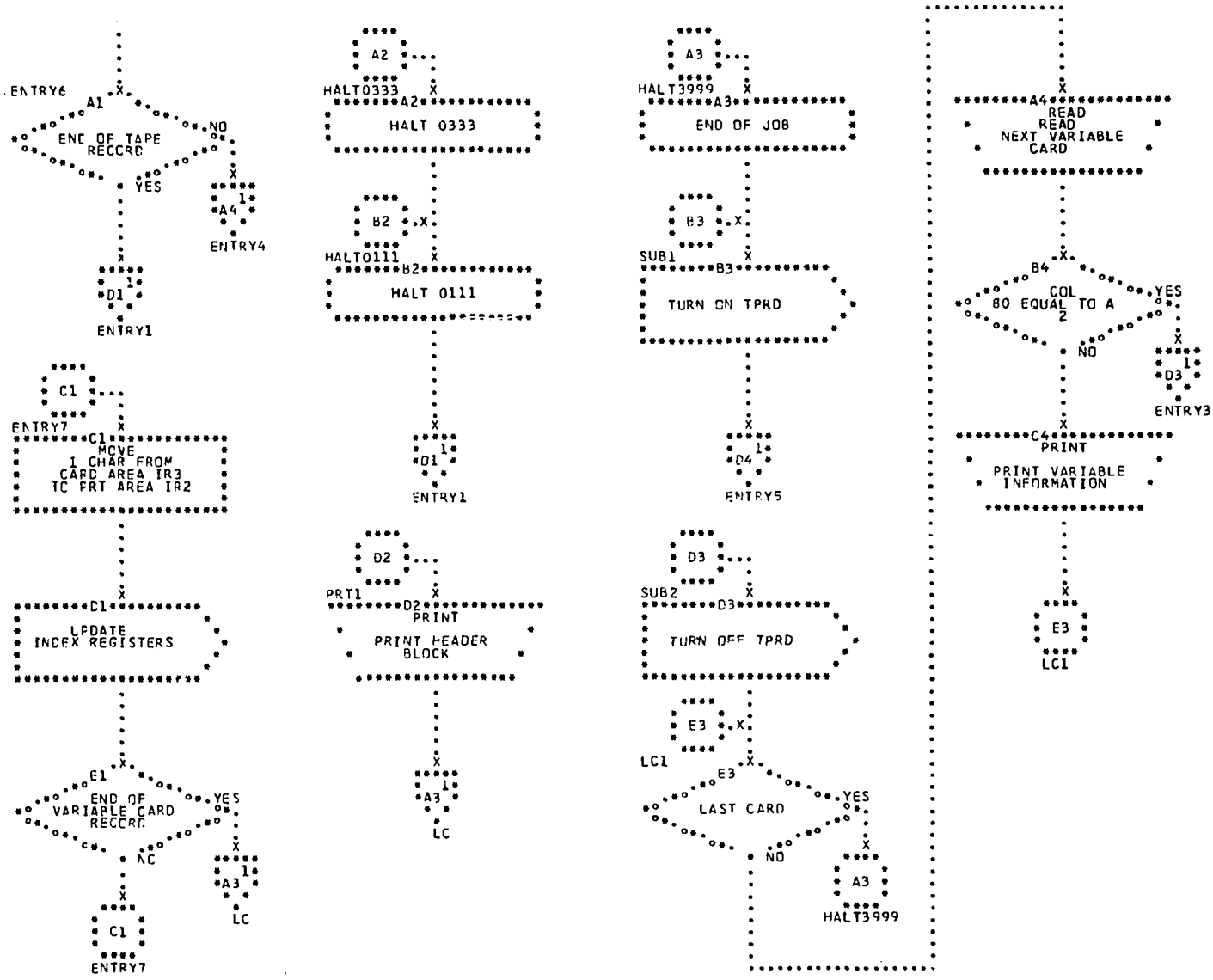
ENTRY6
A1
END OF TAPE RECORD
NO
YES
1
A4
ENTRY4
1
D1
ENTRY1
C1
ENTRY7
C1
MOVE 1 CHAR FROM CARD AREA IR3 TO PRT AREA IR2
D1
UPDATE INDEX REGISTERS
E1
END OF VARIABLE CARD RECORD
YES
NO
1
A3
LC
C1
ENTRY7
A2
HALT0333
A2
HALT 0333
B2
HALT0111
B2
HALT 0111
1
D1
ENTRY1
D2
PRT1
D2
PRINT
PRINT HEADER BLOCK
1
A3
LC
A3
HALT3999
A3
END OF JOB
B3
SUB1
B3
TURN ON TPRD
1
D4
ENTRY5
D3
SUB2
D3
TURN OFF TPRD
E3
LC1
E3
LAST CARD
YES
NO
A3
HALT3999
A4
READ
READ NEXT VARIABLE CARD
B4
COL 80 EQUAL TO A 2
YES
NO
1
D3
ENTRY3
C4
PRINT
PRINT VARIABLE INFORMATION
E3
LC1

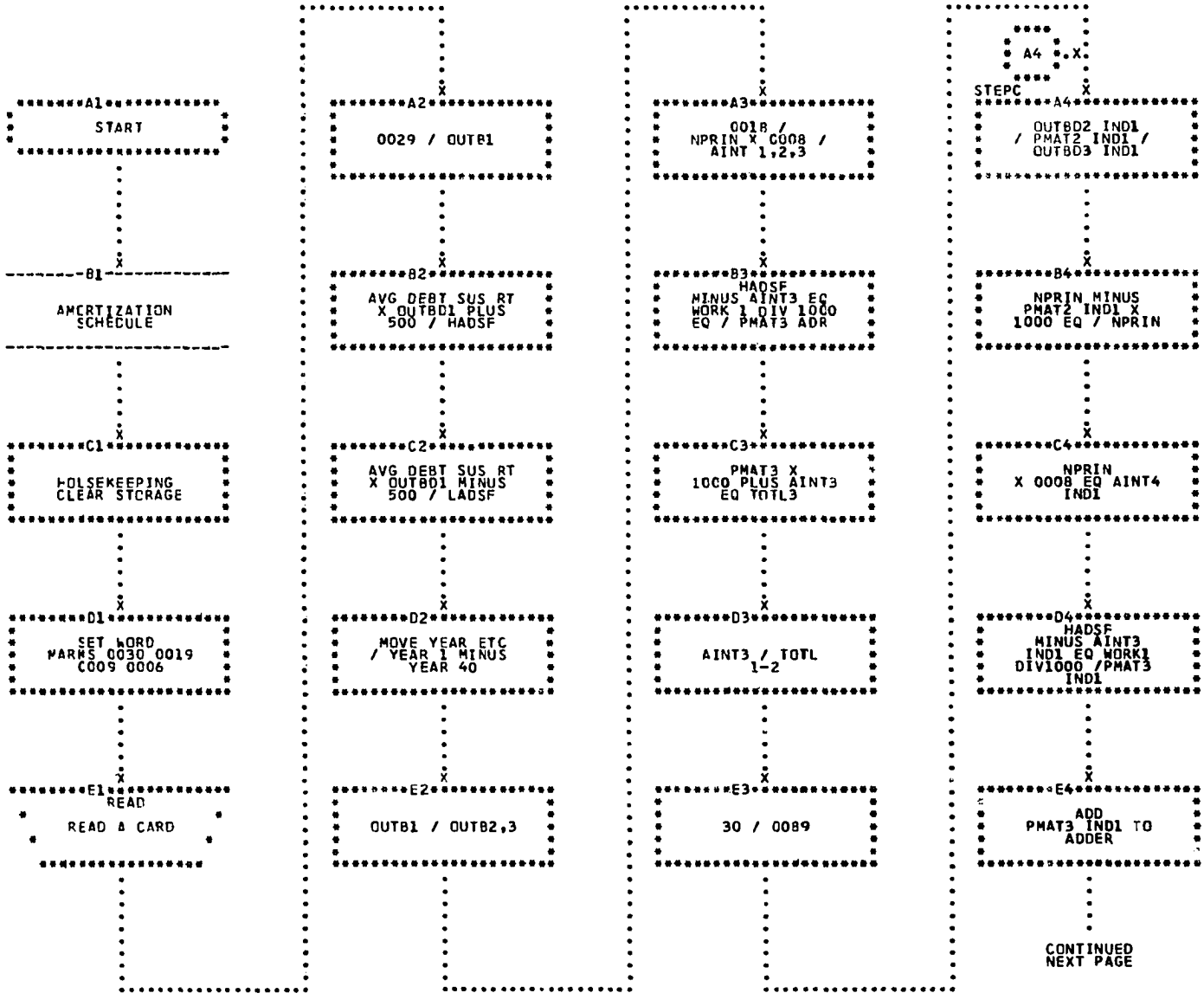
A1
START
B1
AMORTIZATION SCHEDULE
C1
HOUSEKEEPING CLEAR STORAGE
D1
SET WORD MARKS 0030 0019 C009 0006
E1
READ
READ A CARD
A2
0029 / OUTB1
B2
AVG DEBT SUS RT X OUTBD1 PLUS 500 / HADSF
C2
AVG DEBT SUS RT X OUTBD1 MINUS 500 / LADSF
D2
MOVE YEAR ETC / YEAR 1 MINUS YEAR 40
E2
OUTB1 / OUTB2,3
A3
0018 / NPRIN X C008 / AINT 1,2,3
B3
HADSF MINUS AINT3 EQ WORK 1 DIV 1000 EQ / PMAT3 ADR
C3
PMAT3 X 1000 PLUS AINT3 EQ TOTL3
D3
AINT3 / TOTL 1-2
E3
30 / 0089
A4
STEPC
OUTBD2 IND1 / PMAT2 IND1 / OUTBD3 IND1
B4
NPRIN MINUS PMAT2 IND1 X 1000 EQ / NPRIN
C4
NPRIN X 0008 EQ AINT4 IND1
D4
HADSF MINUS AINT3 IND1 EQ WORK1 DIV1000 /PMAT3 IND1
E4
ADD PMAT3 IND1 TO ADDER
CONTINUED NEXT PAGE

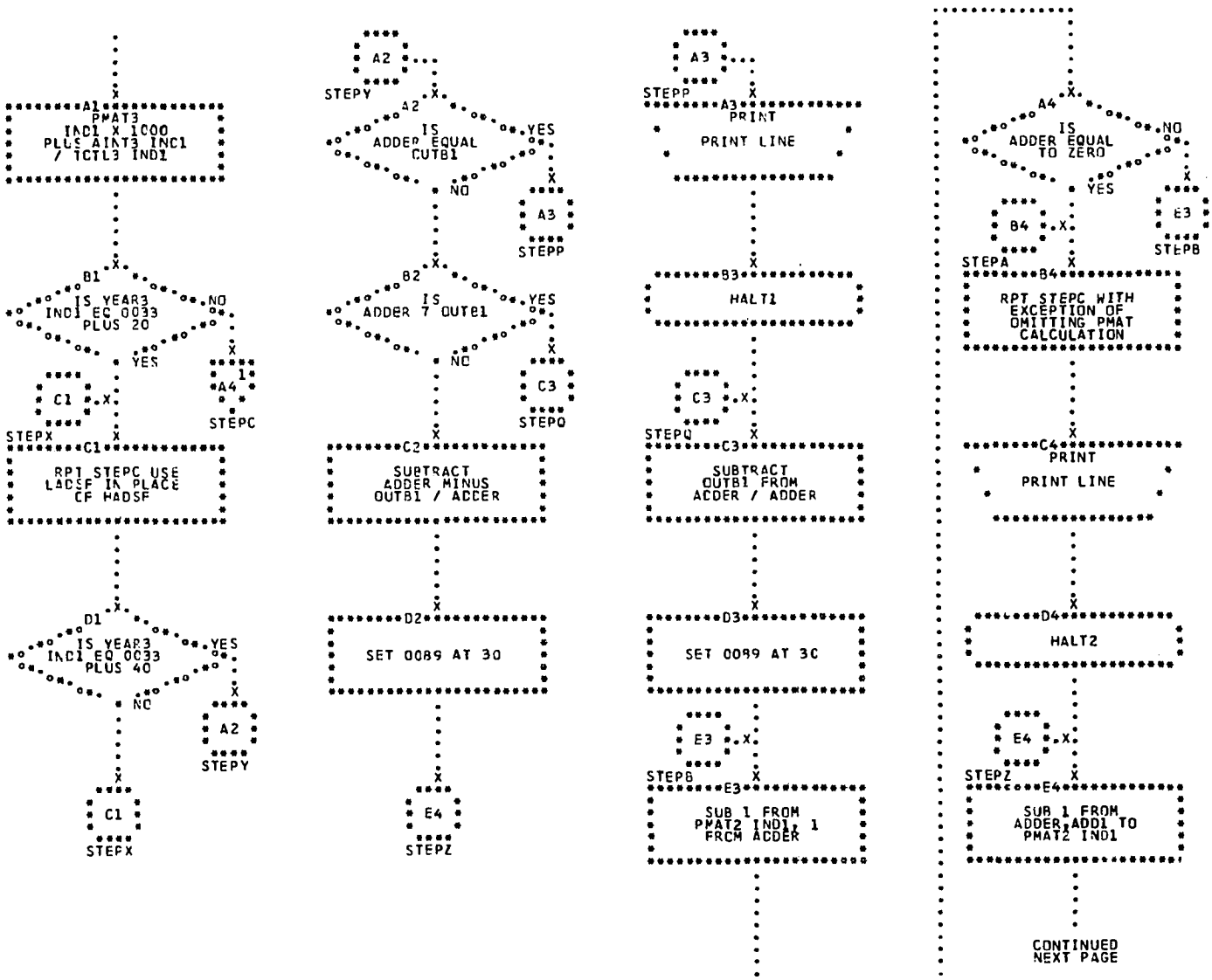
A1
PMAT3
IND1 X 1000
PLUS AINT3 INC1
/ ICTL3 IND1
B1
IS YEAR3
IND1 EQ 0033
PLUS 20
YES
NO
C1
STEPX
A4
STEPC
C1
RPT STEPC USE
LADSF IN PLACE
OF HADSF
D1
IS YEAR3
IND1 EQ 0033
PLUS 40
YES
NO
A2
STEPY
C1
STEPX
A2
STEPY
A2
IS
ADDER EQUAL
OUTB1
YES
NO
A3
STEPP
B2
IS
ADDER 7 OUTB1
YES
NO
C3
STEPQ
C2
SUBTRACT
ADDER MINUS
OUTB1 / ADDER
D2
SET 0089 AT 30
E4
STEPZ
A3
STEPP
A3
PRINT
PRINT LINE
B3
HALT1
C3
STEPQ
C3
SUBTRACT
OUTB1 FROM
ADDER / ADDER
D3
SET 0099 AT 30
E3
STEPB
E3
SUB 1 FROM
PMAT2 IND1, 1
FROM ADDER
A4
IS
ADDER EQUAL
TO ZERO
NO
YES
B4
STEPA
E3
STEPB
B4
RPT STEPC WITH
EXCEPTION OF
OMITTING PMAT
CALCULATION
C4
PRINT
PRINT LINE
D4
HALT2
E4
STEPZ
E4
SUB 1 FROM
ADDER, ADD1 TO
PMAT2 IND1
CONTINUED
NEXT PAGE

STAGE II PROGRAM C

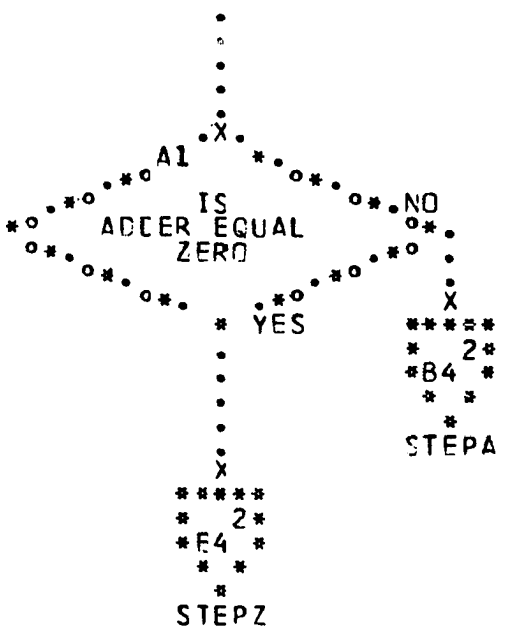

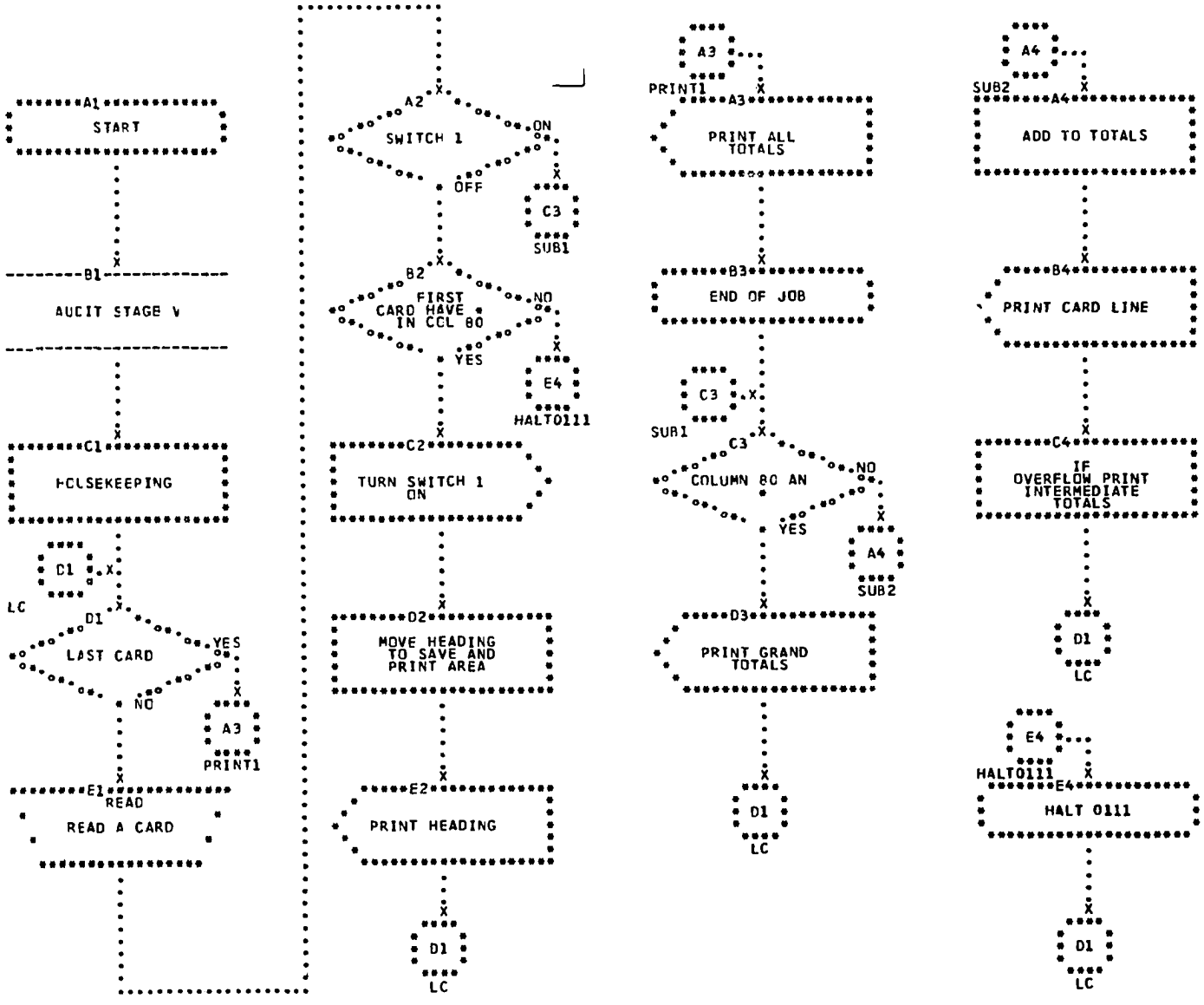
A1
START
B1
AUDIT STAGE V
C1
HOUSEKEEPING
D1
LC
D1
LAST CARD
YES
NO
A3
PRINT1
E1
READ
READ A CARD
A2
SWITCH 1
ON
OFF
C3
SUB1
B2
FIRST CARD HAVE IN COL 80
NO
YES
E4
HALT0111
C2
TURN SWITCH 1 ON
D2
MOVE HEADING TO SAVE AND PRINT AREA
E2
PRINT HEADING
D1
LC
A3
PRINT1
A3
PRINT ALL TOTALS
B3
END OF JOB
C3
SUB1
C3
COLUMN 80 AN
NO
YES
A4
SUB2
D3
PRINT GRAND TOTALS
D1
LC
A4
SUB2
A4
ADD TO TOTALS
B4
PRINT CARD LINE
C4
IF OVERFLOW PRINT INTERMEDIATE TOTALS
D1
LC
E4
HALT0111
E4
HALT 0111
D1
LC

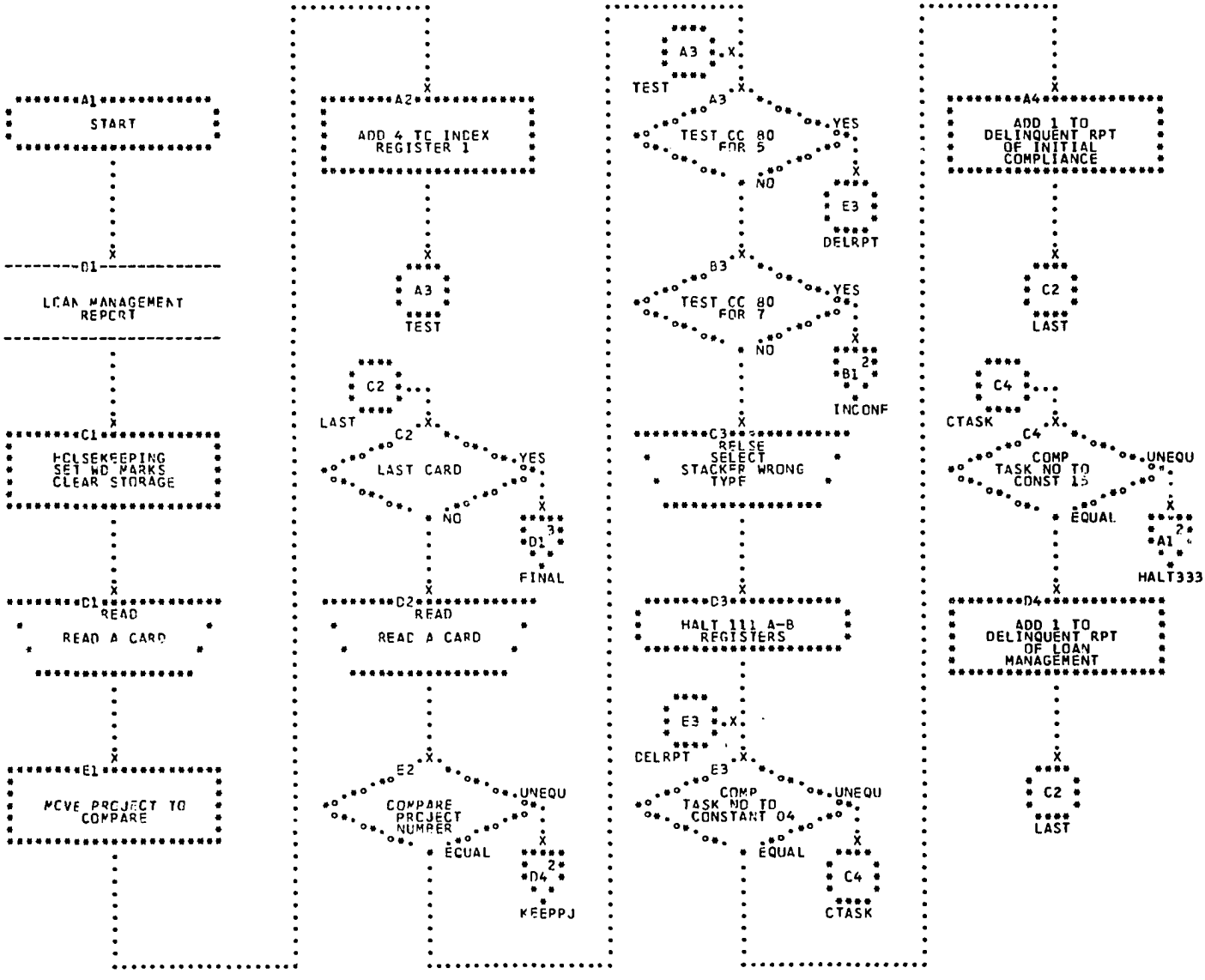
A1
START
D1
LOAN MANAGEMENT REPORT
C1
HOUSEKEEPING SET WD MARKS CLEAR STORAGE
D1
READ
READ A CARD
E1
MOVE PROJECT TO COMPARE
A2
ADD 4 TO INDEX REGISTER 1
A3
TEST
C2
LAST
C2
LAST CARD
YES
NO
3
D1
FINAL
D2
READ
READ A CARD
E2
COMPARE PROJECT NUMBER
UNEQU
EQUAL
2
D4
KEEPPJ
A3
TEST
A3
TEST CC 80 FOR 5
YES
NO
E3
DELRPT
B3
TEST CC 80 FOR 7
YES
NO
2
B1
INCONF
C3
RELSE SELECT STACKER WRONG TYPE
D3
HALT 111 A-B REGISTERS
E3
DELRPT
E3
COMP TASK NO TO CONSTANT 04
UNEQU
EQUAL
C4
CTASK
A4
ADD 1 TO DELINQUENT RPT OF INITIAL COMPLIANCE
C2
LAST
C4
CTASK
C4
COMP TASK NO TO CONST 15
UNEQU
EQUAL
2
A1
HALT333
D4
ADD 1 TO DELINQUENT RPT OF LOAN MANAGEMENT
C2
LAST

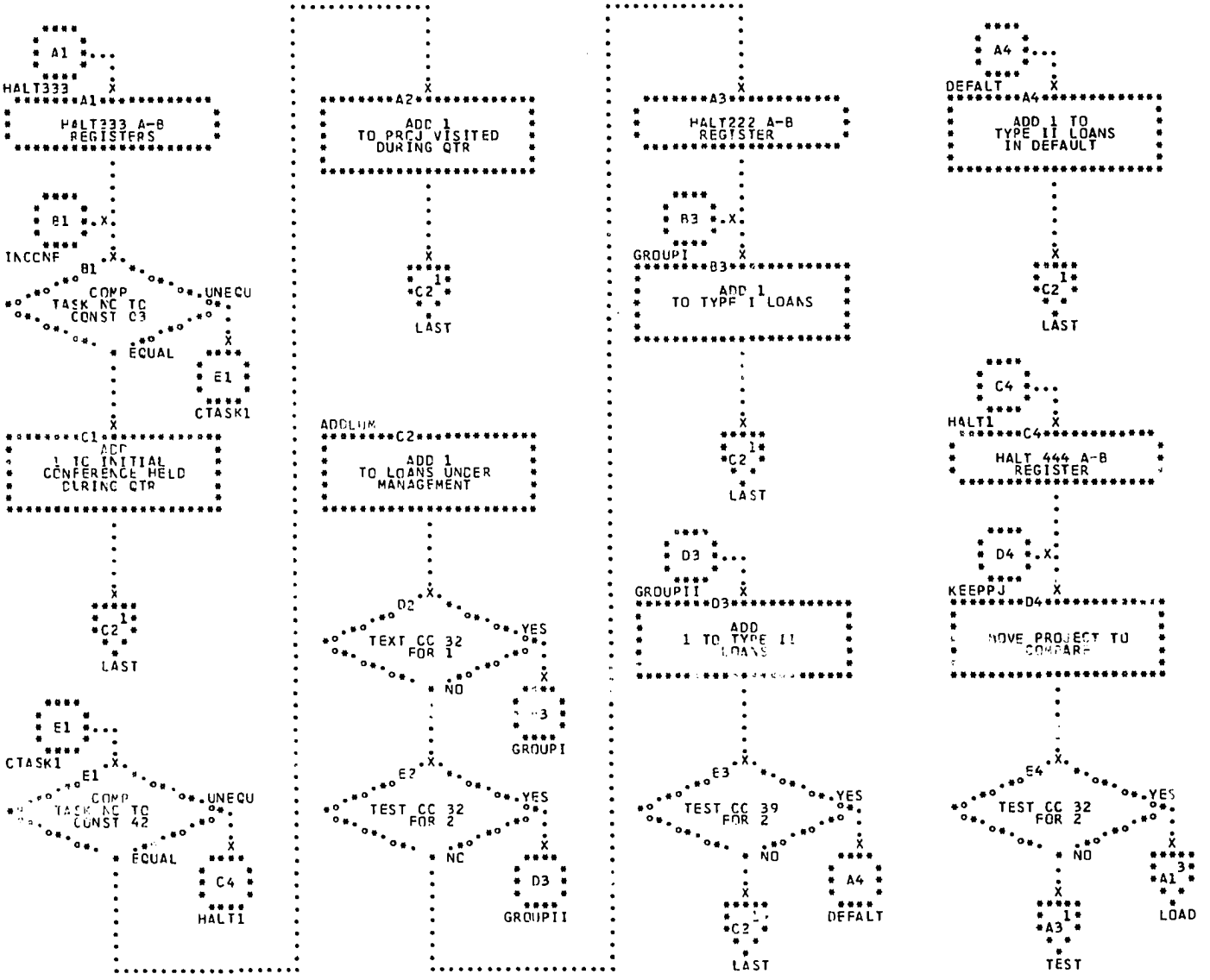
A1
HALT333
A1
HALT333 A-B REGISTERS
B1
INCCNF
B1
COMP TASK NC TO CONST 03
UNEQU
EQUAL
E1
CTASK1
C1
ADD 1 TO INITIAL CONFERENCE HELD DURING QTR
C2
1
LAST
E1
CTASK1
E1
COMP TASK NC TO CONST 42
UNEQU
EQUAL
C4
HALT1
A2
ADD 1 TO PROJ VISITED DURING QTR
C2
1
LAST
ADDLOM
C2
ADD 1 TO LOANS UNDER MANAGEMENT
D2
TEXT CC 32 FOR 1
YES
NO
3
GROUPI
E2
TEST CC 32 FOR 2
YES
NC
D3
GROUPII
A3
HALT222 A-B REGISTER
B3
GROUPI
B3
ADD 1 TO TYPE I LOANS
C2
1
LAST
D3
GROUPII
D3
ADD 1 TO TYPE II LOANS
E3
TEST CC 39 FOR 2
YES
NO
A4
DEFALT
C2
1
LAST
A4
DEFALT
A4
ADD 1 TO TYPE II LOANS IN DEFAULT
C2
1
LAST
C4
HALT1
C4
HALT 444 A-B REGISTER
D4
KEEPPJ
D4
MOVE PROJECT TO COMPARE
E4
TEST CC 32 FOR 2
YES
NO
3
A1
LOAD
A3
1
TEST

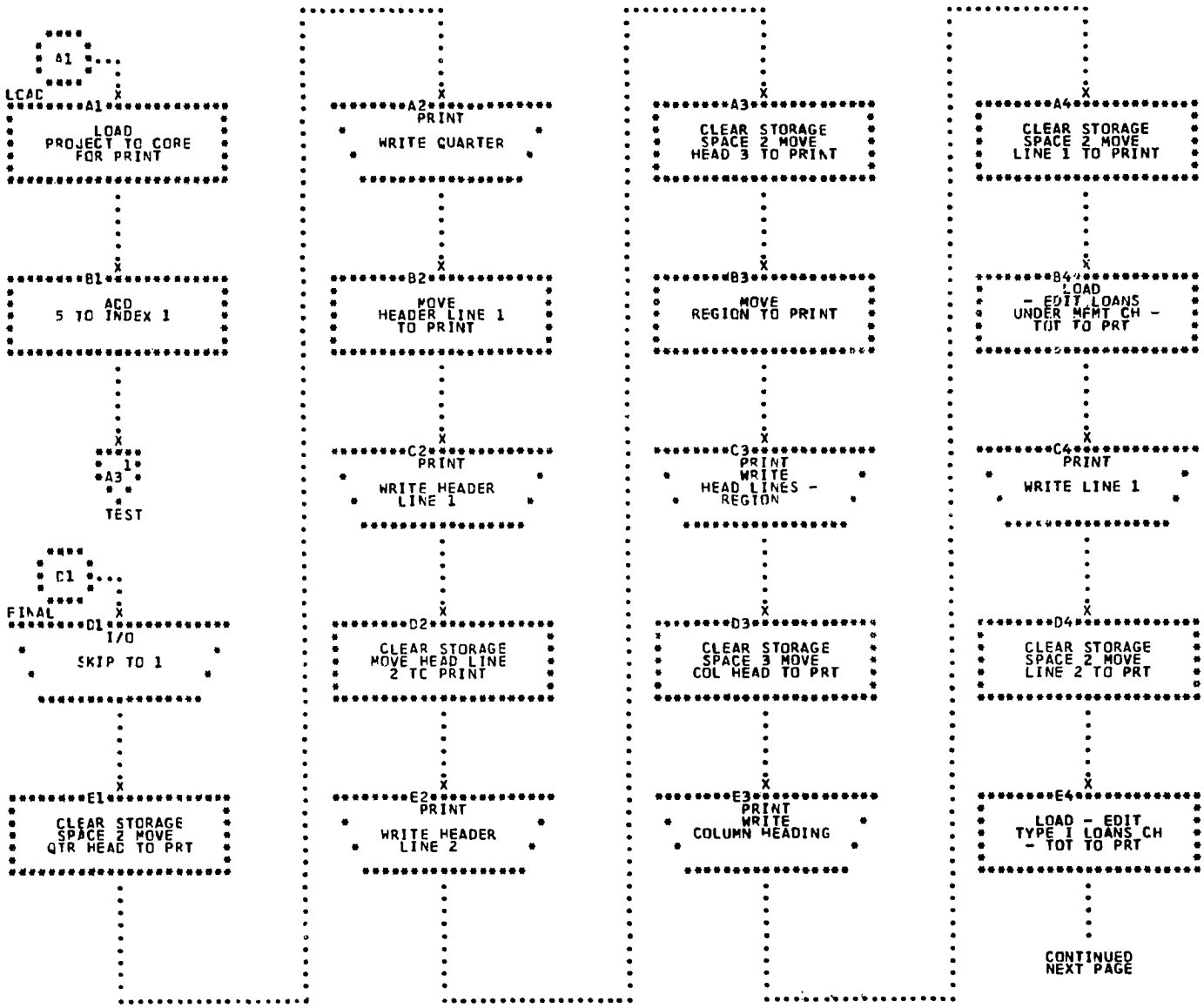

CONTINUED NEXT PAGE

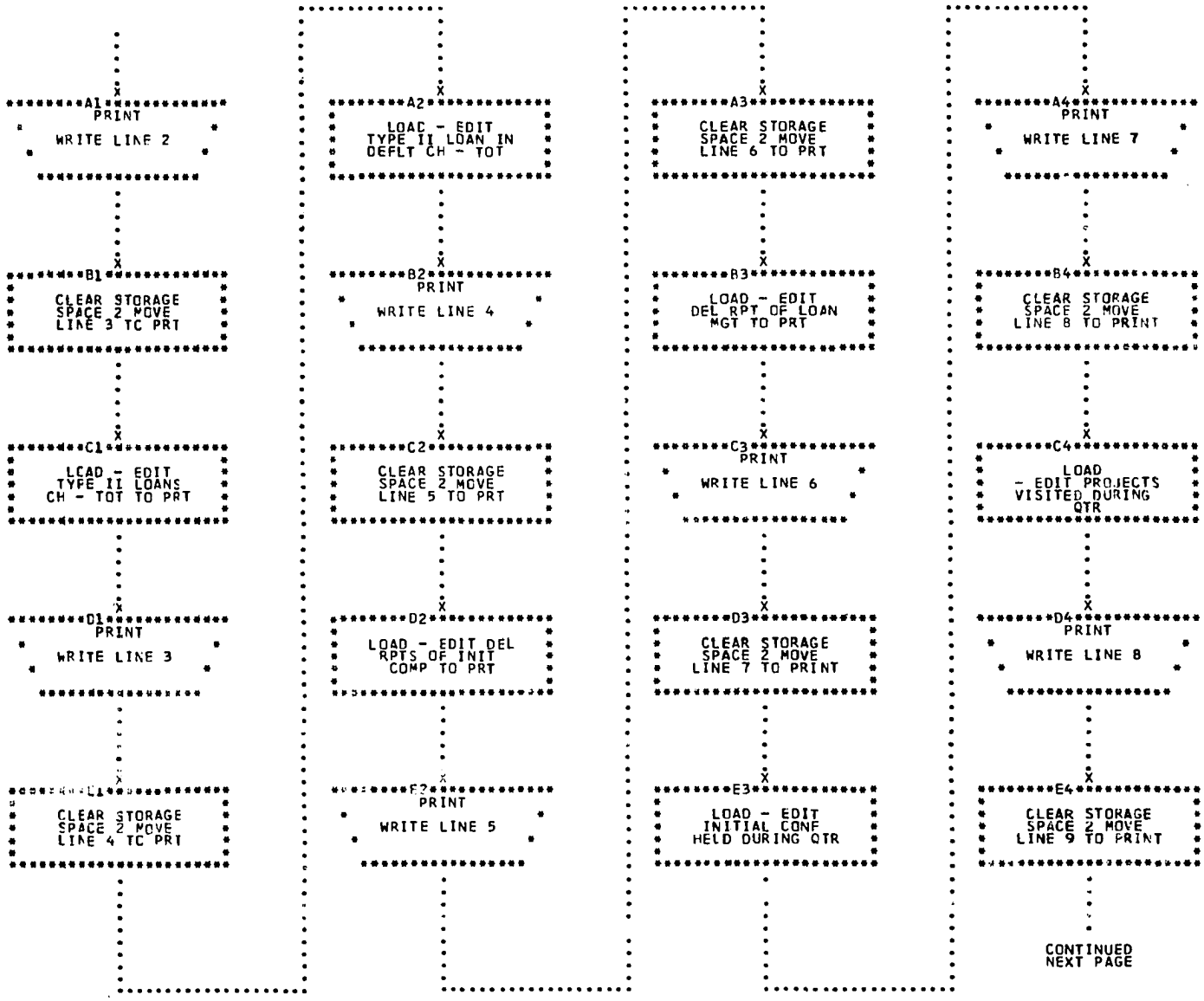
A1
PRINT
WRITE LINE 2
B1
CLEAR STORAGE
SPACE 2 MOVE
LINE 3 TO PRT
C1
LOAD - EDIT
TYPE II LOANS
CH - TOT TO PRT
D1
PRINT
WRITE LINE 3
A2
LOAD - EDIT
TYPE II LOAN IN
DEFLT CH - TOT
B2
PRINT
WRITE LINE 4
C2
CLEAR STORAGE
SPACE 2 MOVE
LINE 5 TO PRT
D2
LOAD - EDIT DEL
RPTS OF INIT
COMP TO PRT
A3
CLEAR STORAGE
SPACE 2 MOVE
LINE 6 TO PRT
B3
LOAD - EDIT
DEL RPT OF LOAN
MGT TO PRT
C3
PRINT
WRITE LINE 6
D3
CLEAR STORAGE
SPACE 2 MOVE
LINE 7 TO PRINT
E3
LOAD - EDIT
INITIAL CONF
HELD DURING QTR
A4
PRINT
WRITE LINE 7
B4
CLEAR STORAGE
SPACE 2 MOVE
LINE 8 TO PRINT
C4
LOAD
- EDIT PROJECTS
VISITED DURING
QTR
D4
PRINT
WRITE LINE 8
E4
CLEAR STORAGE
SPACE 2 MOVE
LINE 9 TO PRINT
CONTINUED
NEXT PAGE

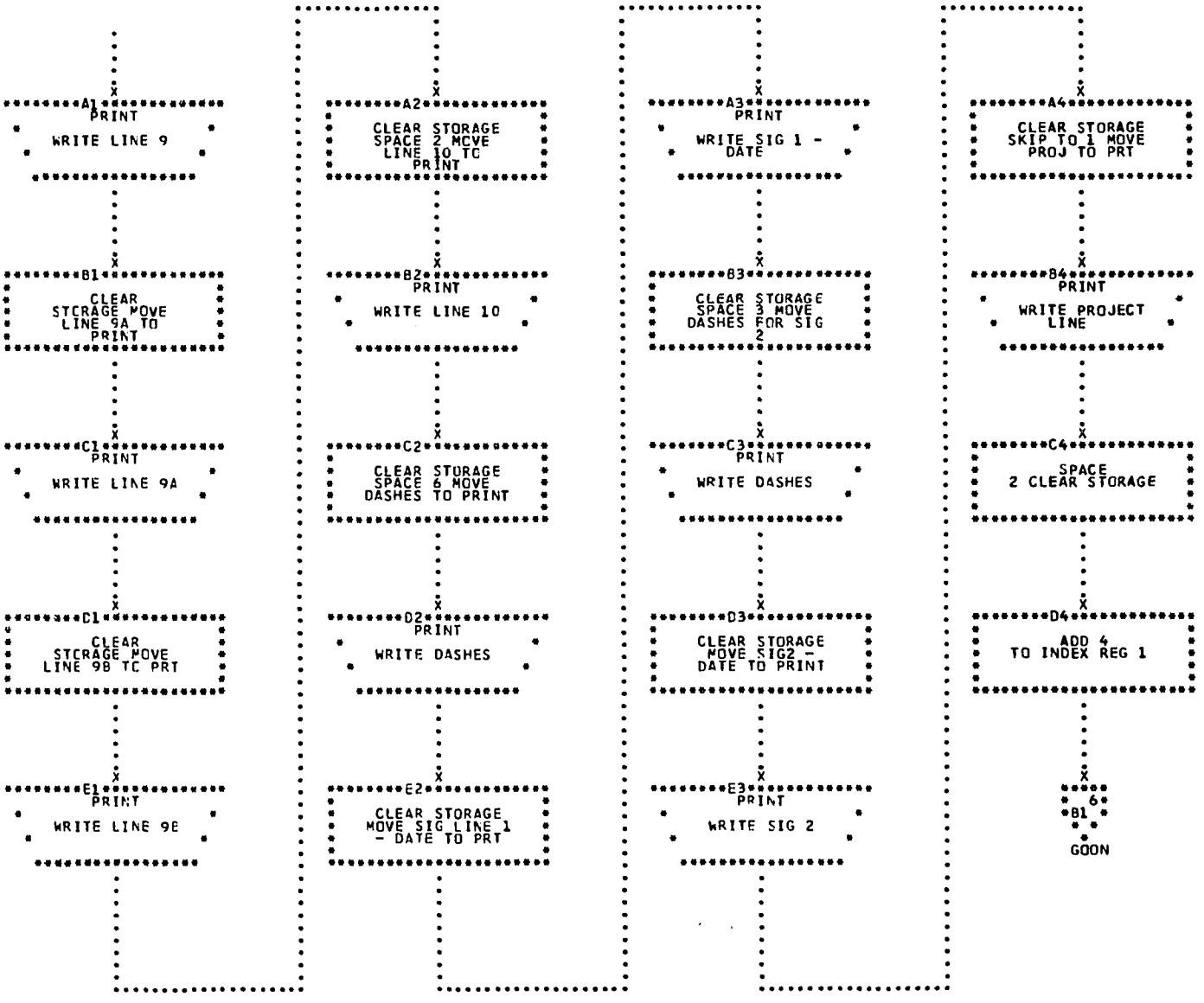
A1
PRINT
WRITE LINE 9
B1
CLEAR STORAGE MOVE LINE 9A TO PRINT
C1
PRINT
WRITE LINE 9A
D1
CLEAR STORAGE MOVE LINE 9B TO PRT
E1
PRINT
WRITE LINE 9B
A2
CLEAR STORAGE SPACE 2 MOVE LINE 10 TO PRINT
B2
PRINT
WRITE LINE 10
C2
CLEAR STORAGE SPACE 6 MOVE DASHES TO PRINT
D2
PRINT
WRITE DASHES
E2
CLEAR STORAGE MOVE SIG LINE 1 - DATE TO PRT
A3
PRINT
WRITE SIG 1 - DATE
B3
CLEAR STORAGE SPACE 3 MOVE DASHES FOR SIG 2
C3
PRINT
WRITE DASHES
D3
CLEAR STORAGE MOVE SIG2 - DATE TO PRINT
E3
PRINT
WRITE SIG 2
A4
CLEAR STORAGE SKIP TO 1 MOVE PROJ TO PRT
B4
PRINT
WRITE PROJECT LINE
C4
SPACE 2 CLEAR STORAGE
D4
ADD 4 TO INDEX REG 1
6
B1
GOON

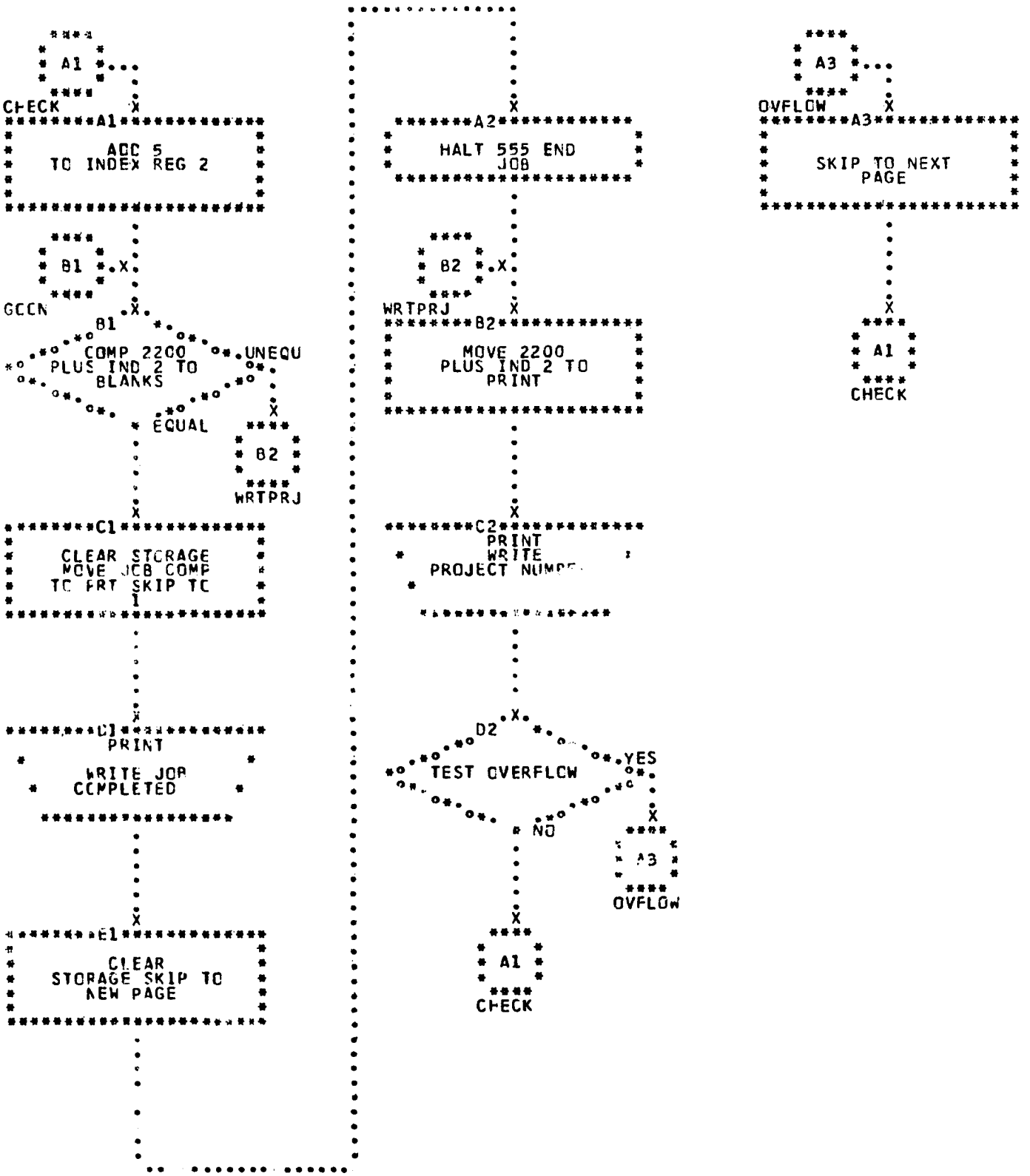
A1
CHECK
A1
ADD 5
TO INDEX REG 2
B1
B1
GOON
B1
COMP 2200
PLUS IND 2 TO
BLANKS
UNEQU
EQUAL
B2
WRTPRJ
C1
CLEAR STORAGE
MOVE JOB COMP
TO PRT SKIP TO
C1
PRINT
WRITE JOB
COMPLETED
E1
CLEAR
STORAGE SKIP TO
NEW PAGE
A2
HALT 555 END
JOB
B2
WRTPRJ
B2
MOVE 2200
PLUS IND 2 TO
PRINT
C2
PRINT
WRITE
PROJECT NUMBER
D2
TEST OVERFLOW
YES
NO
A3
OVFLOW
A1
CHECK
A3
OVFLOW
A3
SKIP TO NEXT
PAGE
A1
CHECK

BIBLIOGRAPHY

BIBLIOGRAPHY

Public Documents

U.S. Bureau of the Budget. Automatic Data Processing Glossary, 1962.

U.S. Congress, Joint Committee on Organization of the Congress. Report of the Joint Committee on the Organization of the Congress. Report No. 948. 89th Cong., 2d Sess., 1966.

U.S. Department of Housing and Urban Development. Metropolitan Data Center, Final Report. Project Okla. D-13, 1966.

U.S. General Services Administration. The Government-Wide ADP Sharing Exchange Program. April, 1965.

U.S. House of Representatives, Committee on Post Office and Civil Service. Use of Electronic Data Processing in the Federal Government. H.R. Report 858. 88th Cong., 1st Sess., 1963.

U.S. House of Representatives. Hearings, Subcommittee for Special Investigations of the Committee on Armed Services. 89th Cong., 1st Sess., 1965.

U.S. House of Representatives, Subcommittee for Special Investigations of the Committee on Armed Services. The Aerospace Corporation, A Study of Fiscal and Management Policy and Control. 89th Cong., 1st Sess., 1965.

U.S. National Aeronautics and Space Administration. Publication of the Computation and Data Reduction Division, Management Computer Application Branch. Houston, Texas: Manned Spacecraft Center, 1963.

U.S. National Science Foundation. Reviews of Data on Research and Development. NSF 63-40. Washington, D. C.: National Science Foundation, 1965.

U.S. Senate, Committee on Government Operations. Report to the President on the Management of Automatic Data Processing in the Federal Government. Senate Doc. 15. 89th Cong., 1st Sess., 1965.

Books

Ackoff, Russell L., and Rivett, Patrick. A Manager's Guide to Operations Research. New York: John Wiley & Sons, 1963.

Berkman, Herman G., and Laning, Caleb B. Proceedings of the Conference on EDP Systems for State and Local Government. Santa Monica, Calif.: Systems Development Corp., 1964.

Borko, Harold (ed.). Computer Applications in the Behavior Sciences. Englewood Cliffs, N. J.: Prentice-Hall, Inc., 1962.

Cole, Helen. Survey of College Data Processing Machines, Courses, and Degrees. Boston, Mass.: Edgerton, Germeshausen, & Grier, Inc., 1963.

Dewey, John. The Public and Its Problems. New York: Henry Holt & Co., 1927.

Glossary of Data Processing and Communications Terms. 2d ed. Wellesley Hills, Mass.: Honeywell, Inc., 1965.

Green, Bert F., Jr. Digital Computers in Research: An Introduction for Behavioral and Social Scientists. New York: McGraw-Hill, Inc., 1963.

Hearle, Edward F., and Mason, Raymond J. A Data Processing System for State and Local Governments. Englewood Cliffs, N. J.: Prentice-Hall, Inc., 1965.

Higginson, M. Valliant. Managing with EDP: A Look at the State of the Art. New York: American Management Ass., 1965.

Janda, Kenneth. Data Processing Applications to Political Research. Evanston, Ill.: Northwestern University Press, 1965.

Keefe, William J., and Ogul, Morris S. The American Legislative Process, Congress and the States. Englewood Cliffs, N. J.: Prentice-Hall, Inc., 1964.

McCloskey, Joseph F., and Frefethen, Florence N. (eds.). Operations Research for Management. Baltimore, Md.: The Johns Hopkins Press, 1954.

Madeheim, Huxley, Magze, Edward M., and Stein, Charles S. (eds.). Readings in Organization and Management. New York: Holt, Rinehart & Winston, Inc., 1963.

Malcolm, Donald G., Rowe, Alan J., and McConnel, Lorimer F. Management Control Systems. New York: John Wiley & Sons, Inc., 1960.

Marx, Fritz Morstein (ed.). Elements of Public Administration. 2d ed. Englewood Cliffs, N. J.: Prentice-Hall, Inc., 1959.

Meisels, Kurt. A Primer of Linear Programming. New York: New York University Press, 1962.

Metcalf, Henry C., and Urick, L. (eds.). Dynamic Administration, the Collected Papers of Mary Parker Follett. New York: Harper & Bros., 1942.

Pfiffner, John M. Research Methods in Public Administration. New York: The Ronald Press Co., 1940.

Rome, Beatrice, and Rome, Sydney. Communications and Large Organization. Santa Monica, Calif.: Systems Development Corp., 1964.

Shuchman, Abe (ed.). Scientific Decisionmaking in Business. New York: Holt, Rinehart, & Winston, Inc., 1963.

Simon, Herbert A. The New-Science of Management Decision. New York: Harper & Row, 1960.

_____, Smithburg, Donald W., and Thompson, Victor A. Public Administration. New York: Knopf, 1950.

Stanley, Alexander O., and White, K. K. Organizing the R & D Function. New York: American Management Ass., 1965.

Stilian, Gabriel N., and Others. PERT--A New Management Planning and Control Technique. New York: American Management Ass., 1962.

White, Leonard D. Introduction to the Study of Public Administration. 4th ed. New York: Macmillan Co., 1955.

Articles and Periodicals

Goddard, V. H. "Three Steps to Systems Analysis," Journal of Data Management, II (September, 1964), 38-41.

Newell, Shaw, and Simon. "A General Problem Solving Program for a Computer," Computers and Automation, VIII (July, 1959), 10-17.

Political Science Quarterly. Vols. II and LXXVII. New York: Academy of Political Science, 1887 and 1962.

Public Administration Review. Vols. IX, XIX, XXI, XXII, and XXIV. Chicago: American Society for Public Administration, 1949-64.

Public Automation. Vol. I, Nos. 1-7. Chicago, Ill.: Public Automated Systems Service (June, 1965-December, 1965).

Reports

Charlesworth, James C. (ed.). The Limits of Behavioralism in Political Science. Philadelphia: The American Academy of Political and Social Science, 1962.

_____ (ed.). Mathematics and the Social Sciences, the Utility and Inutility of Mathematics in the Study of Economics, Political Science, and Sociology. Philadelphia: The American Academy of Political and Social Sciences, 1963.

Unpublished Material

Sells, Saul B. "Psychology and the Automation of Information Processing Systems: Use of Computers in Psychology Behavior." Fort Worth, Tex.: Texas Christian University, 1964. (Mimeographed).