This dissertation has been
microfilmed exactly as received 68-3099

MILLER, Patrick Kelso, 1939-
SIMULATION OF SOCIAL GROUPS WITH ADAPTIVE RECOGNITION TECHNIQUES.

The University of Oklahoma, Ph.D., 1968
Engineering, electrical

University Microfilms, Inc., Ann Arbor, Michigan

Downloaded from SHAREOK. Persistent Handle URL: https://hdl.handle.net/11244/2298

THE UNIVERSITY OF OKLAHOMA

GRADUATE COLLEGE

SIMULATION OF SOCIAL GROUPS WITH ADAPTIVE RECOGNITION TECHNIQUES

A DISSERTATION

SUBMITTED TO THE GRADUATE FACULTY

in partial fulfillment of the requirements for the

degree of

DOCTOR OF PHILOSOPHY

BY

PATRICK KELSO MILLER

Norman, Oklahoma

1967

SIMULATION OF SOCIAL GROUPS WITH ADAPTIVE

RECOGNITION TECHNIQUES

APPROVED BY

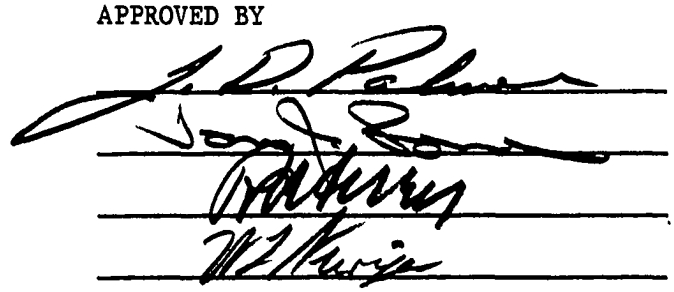

DISSERTATION COMMITTEE

ACKNOWLEDGEMENT

The author is greatly indebted and sincerely appreciates the assistance and encouragement of several agencies and individuals during the preparation of this thesis. These include the School of Electrical Engineering, the Merrick Computer Center, the Institute of Group Relations, and the Systems Research Center at the University of Oklahoma, and the Ford Foundation. Special thanks are extended to Dr. James D. Palmer, Dean, Center for Science and Engineering, Union College, Schenectady, New York, for suggesting the problem and directing the work. Indispensable help and supporting materials have been generously donated by Dr. Richard A. Terry, Director of the Systems Research Center at the University of Oklahoma, and Dr. Frank J. Kern, Professor of Electrical Engineering at the University of Missouri at Rolla. Thanks are also extended to the various members of the Doctoral Advisory Committee for their interest in this work.

Again to Judy Miller, I am especially grateful, not only for excellent typing, but also a range of virtues from patience to perseverance with sanity in between, and some indication of remaining my wife.

TABLE OF CONTENTS

	Page
LIST OF TABLES	v
LIST OF ILLUSTRATIONS	vi
Chapter	
I. INTRODUCTION	1
II. SELECTED EXAMPLES IN THE SIMULATION OF LIVING SYSTEMS	9
III. SIMULATIONAL ASPECTS OF THE ROBBERS CAVE EXPERIMENT	42
IV. A FIXED ELEMENT PROCESSOR FOR THE ROBBERS CAVE SIMULATION	61
V. CONCLUSIONS AND RECOMMENDATIONS	86
BIBLIOGRAPHY	94
APPENDICES	
A. CONTENT ANALYSIS OF THE ROBBERS CAVE EXPERIMENT	105
B. FLOW DIAGRAM OF THE GELISIMA PROGRAM IN FORTRAN IV	126
C. COMPARATIVE GRAPHS OF AVERAGED WEIGHTS FOR GROUP OUTPUTS AND A SAMPLE LISTING OF MADALINE WEIGHTS FOR THE COUPLED-OUTPUT FORMULATIONS OF THE RATTLER GROUP	175

LIST OF TABLES

Table		Page
3.1.	Functional Relations of Dependent Variables	59
4.1.	Binary Output Codes	70
5.1.	Comparison of Training Set Classifications	90
A-1.	Simulational Descriptors	123
A-2.	Simulation Patterns for Rattler Group	124
A-3.	Simulation Patterns for Eagle Group	125

LIST OF ILLUSTRATIONS

Figure Number		Page
2.1.	Logic Structure of the Abstraction Process ...	11
2.2.	Abstraction Diagram of the Simon-Homans Model	13
2.3.	Equilibrium Curves for the Simon-Homans Model	17
2.4.	Tracking System Block Diagram	20
2.5.	Proposed Block Diagram of the Human Operator	23
2.6.	Idealized Electrocardiogram Waveform	32
2.7a	Basic Adaline Decision Element	37
2.7b	Madaline as OR-Connected Adalines	37
3.1.	Basic Organization of Pattern Recognition	56
4.1.	Abstraction Process of the Robbers Cave Experiment	62
4.2.	Organization of GELISIMA Structure	66
4.3.	Sample Elements for Classification	72
4.4.	Adaline with Error Detection	75
4.5.	Multivalued Relation between Adaline Errors	76

LIST OF ILLUSTRATIONS (Continued)

Figure Number		Page
C-1.	Magnitudes of Double-Averaged Weights for Group Structure	177
C-2.	Magnitudes of Double-Averaged Weights for Group Morale	178
C-3.	Magnitudes of Double-Averaged Weights for Group Attitude	179
C-4.	Magnitudes of Double-Averaged Weights for Group Frustration	180

SIMULATION OF SOCIAL GROUPS WITH ADAPTIVE RECOGNITION TECHNIQUES

CHAPTER I

INTRODUCTION

The purpose of this study is to make a "secondary-analysis" of a social-psychological experiment on small group interactions utilizing in part the methods and ideas of systems analysis. The approach taken herein is to investigate the content analysis of the related set of interactions and determine, if possible, those variables which are relevant in the empirical concepts. The associated content analysis is then quantized on ordinal bases and the induced behavioral model computer simulated. The resulting simulation is also interpreted and positioned within the general framework of other techniques. Particular emphasis is placed on a simulation technique using the adaptive capabilities possessed by pattern recognition machines which are of current interest in other applications. Some of the inherent advantages and disadvantages are brought forth throughout the discussion.

In addition to being a very promising academic endeavor, the scientific objective of determining a model of small group behavior would provide a basis for predicting and, with the use of contingency

planning, controlling future events.

Motivation for the Simulation of Group Interactions

Research in the area of group interactions has, in recent years, become of increasing importance. The following two reasons seem to be, at least partially, responsible for this interest. First, there is pressure upon governing bodies to settle contested issues in a social atmosphere that is ever-increasing in complexity. Second, the belief that more meaningful results, obtained with the aid of tremendous advancements in technological capability, will provide better means for understanding and teaching the concepts involved.

One instance that is of particular relevance to this study occurred on May 25, 1966, in the investigations of the United States Senate's Committee on Foreign Relations (106). The hearing was directed toward the psychological aspects of international relations and the experts giving testimony were Dr. Jerome Frank, a psychiatrist for the John Hopkins University School of Medicine; Dr. Charles Osgood, a professor of communication and psychology at the University of Illinois; and Dr. Brock Chisholm, a former Director General for the World Health Organization.

The format of the hearing began with reference to an invitation given to Professor Albert Einstein in 1932 to address the League of Nations by posing questions for anyone he wished. Professor Einstein chose Professor Sigmund Freud and asked about progress toward solution of the following (well-recognized) problem.

Men, individually and together, have exhibited a lust for destruction and the settlement of disagreement through violence which,

through time, appears to have increased in scope - each generation claiming to be more civilized than their ancestors.

Professor Freud's eloquent answer admits there appear to be no concrete steps toward a solution, despite the endeavors of the best intellects. His hope for solution was that through an increasing culture (intelligence), men will learn to turn inward the motivations toward hostility ("with all the rewards and perils") to the extent that their leaders may no longer generate the "collective psychosis" which brings about war and destruction.

The purpose of the Senate hearing was to pose the same question and ask the three experts if after thirty-four years any new solutions were available. The answers, though informative, were essentially the same; there being discernible adjustments in emphasis due to changes in the world situation.

The portion of the testimony which is relevant here was given by Dr. Frank. He referred to an experiment in social psychology dealing with the interactions of groups of small boys.* It was Dr. Frank's opinion that the information gained from such studies was important, since some of the actions of these groups were comparable to those of much larger groups, nations included.

Another source of interest in the simulation of interactions is the practical concern of the business community and military agen-

---

*Though not mentioned specifically by name, there is absolutely no doubt that the experiment referred to is that one performed by the Institute of Group Relations at the University of Oklahoma under the direction of Dr. Muzafer Sherif (93). The study is called the Robbers Cave Experiment.

cies for the evaluation and prediction of leadership and compatible relationships.

Orientation and Objectives of This Study

The construction of a mathematical model for social systems depends upon the development of functions which relate the variables involved. Factors which inhibit this development include:

1) the tendency of the research community to demonstrate the existence of relationships, rather than their precise form;
2) the tendency to focus on isolated relationships between two observed variables.

Reasons for this are by no means inexcusable. Investigations of behavioral phenomena are complicated by the fact that measurements which form a basis for quantitative relationships of general value have not been found. Coleman (18) points out that most research programs are judged successful which demonstrate that "a particular factor had an important effect on some other variable". In most investigations where quantitative measurements have been used, the conclusions are qualitative comparisons (monotonic functions).

This situation indicates that two of the principal requirements for a unified theory are thus far absent. One is an adequate conceptual framework wherein meaningful statements about the subject can be formulated without the danger of misunderstanding. The other is a systematic method of proceeding from premises to conclusions and, thereby, achieving the goal of any theory, which is both to explain and predict the phenomena observed.

The concepts and methods used by people working in this general area seem quite often to be uncertain and frequently at variance with one another. By virtue of this intangible, vague, and imperfectly observable nature, the phenomena (and students thereof) are set aside from the so-called exact sciences. This has elicited an unfortunate attitude that the social sciences represent some sort of second-class stepchild which may never attain the axiomatized purity of the exact sciences. Besides immeasurable harm in other respects, one result is that many social scientists are put on the defensive to the extent that their intuitive procedures are rationalized as necessary due to the vague nature of the subject.

Some of the difficulties involved may be partially resolved. One classical example is the technological advancement in air conditioning design based on a psychophysical measurement termed "effective temperature." This involves the experimental determination of the most comfortable conditions of temperature, humidity, and air movement for a large sample of people. The results are then used as design specifications.

An examination of this example for the fundamental principles involved does not reveal significant differences in the present rationale to other applications of the scientific method. This is despite the fact that a form of human behavior is involved. Without any implication of instant success intended, those variables are abstracted which are relevant to the purpose of the experiment. Models are then constructed which simulate the experimenter's concept of the "natural" or "real" situation with some facility for control of the variables. Tests are

performed in the simulated environment for verification of the abstraction. Finally, a description is stored in a logical form that transmits a relatively large amount of information with the least possible misunderstanding or ambiguity. Other examples that use the physical sciences and engineering as a stepping stone to making psychophysical measurements may be found in Stevens (103).

As previously indicated, the analysis of small group processes is one area of social-psychological phenomena where measurement and, even more fundamentally, the formation of concepts is difficult. Ostensively, the variables used for the description of human interactions are (necessarily) extracted from the observed events. Due to the nature of these interactions, the explicit definition of variables in mathematical terms is exceedingly rare. This will usually lead to definitions which are heuristic and depend somewhat on the connotations given to terms used in everyday language.

For instance, the concept of frustration can be explained in an intuitive manner and examples cited. Once this is done, it is then possible to observe other examples; however, when the viewer is asked to what degree or level has frustration occurred, the whole concept becomes dependent on the viewer, and it is realized that the term "frustration" is a vague concept and (apparently) not an objectively measurable function of observable events. In Yate's (114) book, he emphasizes that in the analyses of frustration, it is often a moot question as to whether an organism is in a state of frustration or the organism is imbedded in a frustration-producing environment. He feels the two concepts should be dichotomized into classes of frustra-

tion stimuli and frustration response and further investigation centered upon which elements of these classes are observable, controllable, and hopefully predictable.

This confusion of terms could be quickly resolved if standards or even quasi-absolute references could be found. It seems, however, that the very core of the analysis problem is that the responses to similar situations are only qualitatively predictable. This results in theoretical formalisms which, when based upon experiments, require either a very flexible structure whose interpretation needs special insight or a highly structured situation with a very small perspective of general application. This does not negate the application of quantitative formulation, but it does indicate that until the proper concepts are identified the results remain qualitative.

To take a defeatist's attitude and await the espousal of a comprehensive theory based on lucid concepts is no more sensible than to continue investigating two variable relationships (single output system) and expect a precise generalization to the multivariable. Admittedly, the quantitative physical sciences of today came about through development of single mathematical relationships and subsequent generalization to models. Possibly the converse will prevail in the substantive sciences. The connotation of "model" in the physical sciences denotes a relational entity as a part of a well-confirmed body of scientific knowledge. The relationships used to express the interdependence of its attributes are based upon a theoretical framework whose fundamentals are verifiable by experimentation. Since there exists no well-established theory for the phenomena, a social systems model is

of more tentative character; prediction must be consistent with its postulational basis and be comparable to observations.

This seemingly profound approach is not easily implemented. In order to abstract mathematical postulates, the empirical hypotheses must be without ambiguity. The ambiguity of verbal statements is relatively minimized when the elemental concepts have large components of impersonal constructs. In another way, the hypotheses must impart information in such a context that the relational invariances of the nominative properties may be ascertained. Again, this seldom occurs in social-psychological theory and is apparently well recognized.

In a short paper, Helmer (44) outlines a need for the development of a social technology. Based initially on heuristic procedures justifiable through means-end criteria, modeling techniques are generated through repeated simulation of an experiment. The capabilities of present computers make this plausible and once such a simulation is obtained, its internal processes should suggest conceptual modifications to the theory or model involved. The technology approach is not a refutation of present knowledge or common sense. Rather, it is a supplementary aid to gain insight into behavioral phenomena where predictive determinism (not necessarily absolute) is assumed and the relevant variables describing the states of the system are sought.

In the next chapter, several reviews of other simulation efforts are presented to assist in delineating that of social groups. It is hoped that the attributes emphasized will help to clarify for the reader both the generality and infirmity that follows in the simulation of social groups.

CHAPTER II

SELECTED EXAMPLES IN THE SIMULATION OF LIVING SYSTEMS

Rationale of Simulation Studies

For several decades, both engineers and mathematicians have been interested in providing suitable mathematical models to describe behavioral phenomena. To attempt a complete survey is beyond the scope of this paper; however, it is sufficient (and safe) to recognize one principle of Norbert Wiener (112). His belief was that significant research topics are to be found in the "crack" between two fields. This idea is popularly termed "interdisciplinary" endeavor and has brought about an aggregate of newly christened fields (e.g., bionics, biochemistry, econometrics, operations research, etc.) as well as new directions of motivation in the areas of economics, biology, psychology, engineering, mathematics and scientific philosophy.

The optimistic utterances of such terms is of questionable value without some explanation of the concepts involved. Furthermore, the lack of general agreement among members of the scientific community over definitions makes the use of analogy expedient. The aforementioned crack between disciplines cannot be filled with the thoughtless juxtaposition or sandwiching of constituent theories. Instead, a pliable, flexible mixture of inferred concepts, ideas, and innovations is needed

which may be fractionated for particular applications and will harden with usage to provide a dependable basis of analysis and discourse.

The procedural rationale which has received a great deal of attention in the literature since 1960 is denoted as "simulation". As a logical entity, the only apparent differences between simulation and model building or systems' analyses is that simulation connotes a state-of-the-art in modeling. It is constrained by the experience of past generations and has grown in stature due to the development of some sophisticated techniques which were unavailable a generation ago.

The importance of models and model building as an integral part of scientific inquiry has been stated quite succinctly by Rosenblueth and Wiener (86).

> No substantial part of the universe is so simple that it can be grasped and controlled without abstraction. Abstraction consists in replacing the part of the universe under consideration by a model of similar but simpler structure. Models...are thus a central necessity of scientific procedure.

A scientific model can then be defined as an abstraction of some real system that can be used for purposes of description, prediction, and control. Furthermore, simulation is the collection of those heuristic methods used to construct and evaluate such models. The ideological structure of simulation is further defined for the present purpose in the Venn diagram* of Figure 2.1. A somewhat different but conceptually similar discussion of simulation was recently presented by Geisler and Ginsburg (32). Within this framework, any

---

*It is convenient to represent the universal set by a plane region, and the subsets of interest by conveniently shaped regions within the plane. Such a diagram is called a Venn diagram.

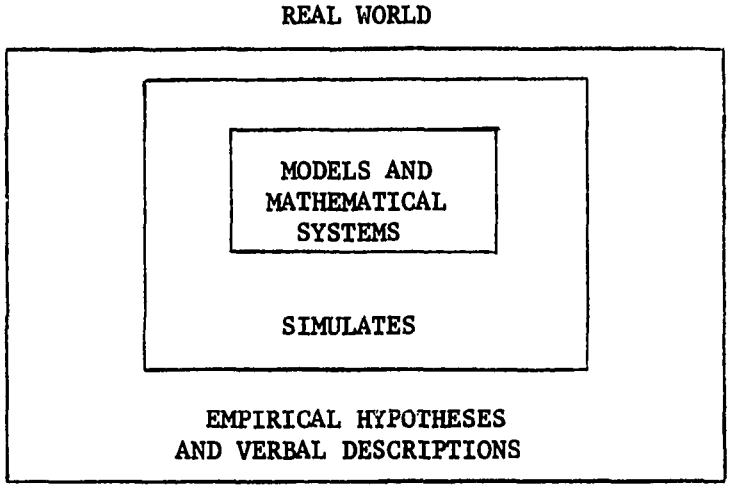

Figure 2.1. Logic Structure of the Abstraction Process

recurrent experience becomes a potential scientific subject and simulation is the art and science by which the quest for invariances in the selected attributes of that subject proceeds.

In particular, the analysis of human behavior is applicable and the attainment of even moderate success, like other endeavors, hinges on the "reasonable" trade-off between simplicity and reality. Several selected examples of simulation, some of which involve human behavior, are described in the following sections. These were chosen to exhibit the variety of techniques used in simulation and model building; however, they are by no means exhaustive of the innovations possible.

The Simon-Homans Model of Small Groups

The first example is taken from Coleman (18) and relates a straightforward attempt to formalize a mathematical study of small groups. The diversity of this undertaking was previously discussed in

Chapter I. Social-scientific research in the area of small group behavior is still in the pre-theoretical, variable-searching stage. This difficulty in establishing quantitative theory is traceable to the problem of measurement and, more fundamentally, to the problem of concept formation. At the same time, however, it might be that certain relationships have a constant form over a wide range of situations. One example being the proposed Weber-Fechner law which relates magnitude of discrimination to magnitude of stimulus such that the change of discrimination with an increment in stimulus is inversely proportional to the existing level of stimulus. Here again it is pointed out that such a relationship, based on empirical research, is a singular quantitative generalization and the deductive power of a mathematical model, which depends upon a network of related generalizations, has not been made available.

Another tendency which inhibits the development of mathematical models in small group behavior is the delineation of individual behavior in the small group situation rather than the group itself as a system of behavior. Such investigations are typified by experiments in which "the group" is either overtly controlled by the experimenter (or his designated authority) or one individual is the naive indicant. Therefore, the generalizations developed are about the behavior of an individual under certain social conditions, leaving unexamined the system which constitutes these conditions.

The case under examination here is a formalization performed by Simon (95) on some of the propositions stated by Homans in The Human Group. Figure 2.2 clearly shows the steps taken by Homans in a

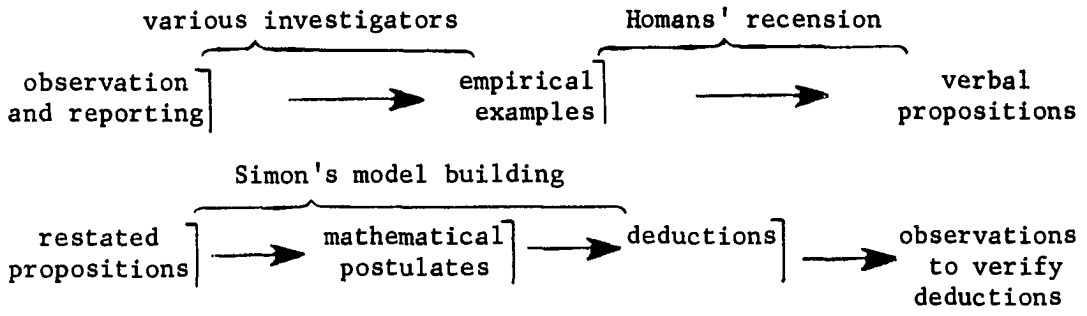

Figure 2.2. Abstraction Diagram of the Simon-Homans Model

relatively precise description and generalization of other works; it was then extended by Simon when he restated the propositions and translated them to a mathematical system. Homans explicitly delineated three types of variables concerning group behavior: (I) those involving "interaction" between members of the group, (A) those concerning the kind of group "activity", and (F) those concerning sentiments of "friendliness" between members. Simon added to these the "environmental" variable (E) which denotes activity imposed upon the group and his abstracted propositions follow:

> 1) The intensity of interaction depends upon, and increases with, the level of friendliness and the amount of activity carried on within the group.... We will postulate, further, that the level of interaction adjusts itself rapidly - almost instantaneously... to the two variables on which it depends.
>
> 2) The level of group friendliness will increase if the actual level of interaction is higher than that 'appropriate' to the existing level of friendliness. That is, if persons in a group with little friendliness are induced to interact a great deal, the friendliness will grow; while if persons with a great deal of friendliness interact seldom, the friendliness will weaken. We will postulate that the adjustment of friendliness to the level of interaction requires time to be consummated.
>
> 3) The amount of activity carried on by the group will tend to increase if the actual level of friendliness is higher than that 'appropriate' to the existing amount of activity, and if the amount of activity imposed externally on the group is higher than

> the existing amount of activity. We will postulate that the adjustment of the activity level to the 'imposed' activity level and to the actual level of friendliness require time for their consummation.

Simon's translation to mathematical statements is in two principal parts. The first is a characterization of relational properties based on assumptions having empirical value; the second concerns assumptions of linearity to simplify the mathematics. From the first proposition is derived the equation:

$$I = f(A,F) \tag{2.1.1}$$

with the further restrictions that

$$\text{a)}\ \frac{\partial I}{\partial A} > 0 \quad \text{and} \quad \text{b)}\ \frac{\partial I}{\partial F} > 0 \tag{2.1.2}$$

Propositions (2) and (3) are somewhat more complicated due to the explicitly stated dependence on time and the implied possibility of equilibrium. The first equations that are then determined from each are, respectively:

$$\frac{dF}{dt} = g(I,F) \tag{2.2.1}$$

and

$$\frac{dA}{dt} = \psi(A,F;E) \tag{2.3.1}$$

Further restrictions are to be placed on both of these relations. Note that if an independent variable is increased, the "appropriate" level of the dependent variable is higher. This must, however, be stated carefully if an unstable condition is to be avoided. The procedure for doing this will be analyzed only for proposition (2) since the reasoning used for both propositions (2) and (3) is similar.

When $g(I,F) = 0$, the level of F is "appropriate to" what has

been the level of I and an increase in I will raise the "appropriate" level of F. That is, it will increase F through making $\frac{dF}{dt}$ positive. Stated directly,

$$\frac{\partial g}{\partial I} > 0 \qquad (2.2.2)$$

in the neighborhood of $\frac{dF}{dt} = 0$. In order that there then exist an equilibrium value of F, it is necessary that for large F, as F increases, $\frac{dF}{dt}$ must decrease (in the neighborhood of $\frac{dF}{dt} = 0$). Otherwise, the increase in I, producing a positive $\frac{dF}{dt}$, would increase F, which would in turn increase $\frac{dF}{dt}$ and thus increase F without bound. A restriction which prevents this is

$$\frac{\partial g}{\partial F} < 0 \qquad (2.2.3)$$

Similar restrictions for proposition (3) are, respectively:

$$\frac{\partial \psi}{\partial F} > 0; \quad \frac{\partial \psi}{\partial E} > 0; \quad \frac{\partial \psi}{\partial A} < 0 \qquad (2.3.2,3,4)$$

wherein activity is assumed not to increase without limit.

Some of Simon's more cogent deductions result when equation (2.1.1) is substituted into (2.2.1),

$$\frac{dF}{dt} = g(f,F) = \varphi(A,F) \qquad (2.4.1)$$

then noting that

$$\frac{\partial \varphi}{\partial A} = \frac{\partial g}{\partial f} \cdot \frac{\partial f}{\partial A} > 0 \qquad (2.4.2)$$

Next, it is observed that

$$\frac{\partial \varphi}{\partial F} = \frac{\partial g}{\partial f} \cdot \frac{\partial f}{\partial F} + \frac{\partial g}{\partial F} \qquad (2.4.3)$$

may be positive or negative depending on whether the effect of F working indirectly through f (that is, through I, since I = f) is greater than

its direct effect on g.

Although the equations do not predict which will happen, if $\frac{dF}{dt}$ kept increasing with an increase in F it would continue without limit and some further conditions are imposed. First, the effect of F upon φ for large F must be negative:

$$\frac{\partial \varphi}{\partial F} < 0 \tag{2.4.4}$$

in the neighborhood of $\frac{dF}{dt} = 0$. Also, the increment in F (which tends to decrease φ) necessary to counterbalance the effect of a given increment of A (which tends to increase φ) must become smaller as F increases. Intuitively, this means that if A increases, thus increasing F through making $\frac{dF}{dt}$ positive, the resulting increase in F will be more than enough to depress $\frac{dF}{dt}$ back to zero or negative. Analytically, the restrictions are

$$\frac{\partial^2 \varphi}{\partial A^2} < 0 \quad \text{or} \quad \frac{\partial^2 \varphi}{\partial F^2} > 0 \tag{2.4.5}$$

in the neighborhood of $\frac{dF}{dt} = 0$. A similar assumption follows for equation (2.3.1):

$$\frac{\partial^2 \psi}{\partial A^2} > 0 \tag{2.3.5}$$

in the neighborhood of $\frac{dA}{dt} = 0$.

The assumptions of bounds, or a "saturation effect", make possible some qualitative deductions about the system with respect to equilibrium. Because the equations and restrictions give too little information, curves cannot be precisely located in the A, F plane. However, the restrictions may be used to determine general properties and a typical pair of curves (though others, of course, exist) for the

equations $\varphi(A,F) = 0$ and $\psi(A,F,E) = 0$ are shown in Figure 2.3 for the A,F plane. For the conditions indicated by the graph, two pairs of values of friendliness and activity exist which correspond to system equilibrium. The point (A_1, F_1) being in unstable equilibrium whereas the point (A_2, F_2) is in stable equilibrium.

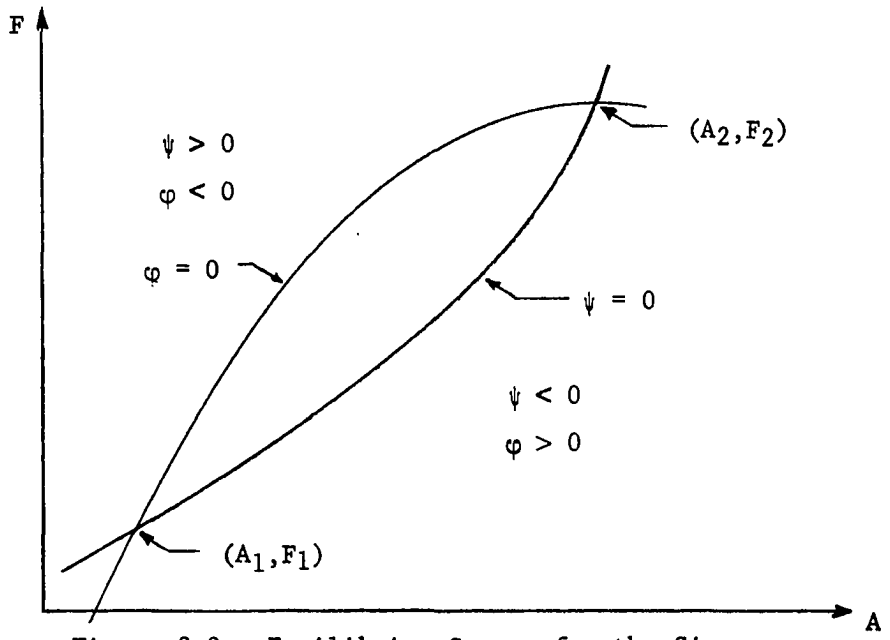

Figure 2.3. Equilibrium Curves for the Simon-Homans Model.

The further assumptions of a linear model as originally presented by Simon will not be pursued here since his deductions are not dependent on the linearity property in the strict sense; that is, the previous restrictions which concern the behavior of the model near equilibrium indicate a "small signal" type of analysis wherein the first order approximations are of a linear form. The assumption, however, of a linear relationship is comparable to the use of a Centigrade temperature scale (instead of Kelvin) in conjunction with the idea gas law, $pV = RT$. In general, the results are incorrect, but if

only those deductions which depend upon linear transformations between scales are used (that is, those concerning only differences in temperature) and not upon their having the same reference point, Centigrade scales are all right. In the same way, Simon's deductions do not depend on linearity assumptions.

The discussion thus far has been based on meaningful yet abstract terms. Neither Simon nor Homans examine the relation of the abstract system to the real world. This again is the measurement problem wherein the variable F, for example, may be defined as the average friendliness between pairs of members of the group. But, of course, this does not define F in terms of the real world; it only relates a symbol (F) from one abstract system to a symbol (friendliness) from another. Neither investigator gives any instructions for observations and due to the vague concepts involved, different investigators of small groups would more than likely give quite different instructions.

The propositions, as stated, are quite weak, so weak that possibly no matter what the area of meaning they will be true. Then the question is, are the relations weak enough so that they will hold within an accepted core of meaning for the concepts? This is unanswerable without knowing what the "accepted core of meaning" is. To know this, it would be necessary to either directly question and correlate the responses of a number of social scientists concerning their definitions of the concepts or indirectly use their analyses in a simulation and compare the results. The simulation approach offers the possibility of classifying different measurement methods according to their invariances though it may not precisely define the "core of

meaning" involved.

Before turning to another example, two other aspects of the model should be considered. First, the translation from the verbal propositions to mathematical postulates has not been performed without at least one added assumption. That being that the variables are "state" variables of the system, which have certain relations independent of the time path of the system. Thus, the relations are assumed applicable independent of the length of time that the group has been in existence or how it came into existence. The strength of these assumptions also warrants the direct structural relationship. Otherwise, it would be possible to construe any of the statements to mean that both the assumed dependent and independent variable change in the same direction when some other variable which affects them both is varied. This would indicate a mere co-variation and it is not then legitimate to posit an algebraic relation between variables and imbed this in a system of relations. This assumption is the most difficult and possibly the most important to confirm of any made regarding social systems.

The second aspect regards the tacit assumption of restricting the range of groups considered so that "reasonable" measurement methods for the variables would order groups in the same way. This exists as a partial resolution to restrict the scope of the theory to relatively homogeneous sets of groups, or to the changes over time of a single group which maintains much the same structure and function. Then as the measurement of the concepts is refined and the understanding of the underlying processes increases, the scope of the theory broadens to

include a wider range of variability among groups.

An Adaptive Simulation of a Human Operator

The second example was recently reported by Knoop and Fu (55), and it involves a digression from the central topic here of small groups to that of the simulation of a task-performing individual. This type of problem is philosophically described as the analysis of the "man-machine interface". One of the practical motivations is the need for support or "back up" systems in manned, orbital spacecraft. Because of the human operator, such systems have been termed adaptive and, more recently, have been denoted as "learning" control systems.

In this instance, the human operator controls a mechanism with his arm by visual observation of the error function. That is, he attempts to null the difference between the input signal and the mechanism output as presented on a visual display. The physical interconnection of the control system being investigated is then that

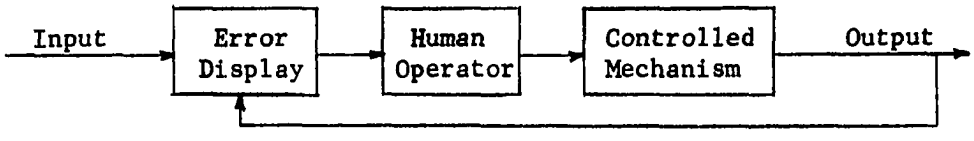

Figure 2.4. Tracking System Block Diagram

of visual-manual tracking as shown in the block diagram of Figure 2.4.

Experimental evidence indicates that the operator is capable of changing his own tracking characteristics in an optimum manner according to his interpretation of the given tracking instructions. This performance modification or adaptation occurs for changes in either the mechanism dynamics or the type of input signal.

In order to formulate a model (i.e., the simulation process), it was analytically necessary to use both the experimental time domain information and a large body of "a priori" information about the physiological features of the human operator. The chosen class of input signals was either a sequence of pseudo-random steps or band-limited gaussian noise since the operator possesses a "pre-cognitive" response to single-frequency inputs. Once the proposed model was capable (after analytical refinement) of displaying some of the real system attributes, simulation and experimentation were concurrently performed to make further developments.

A logical overview, as opposed to chronological, of the solution scheme follows. First, it was deemed necessary to determine an "adapted" model (time invariant) of the system and test against actual recorded data. Then, an adaptive mechanism was added to the model to explain the transient behavior of the human "controller" when subjected to changes in "plant" dynamics. This abstraction identifies the controller as only the central nervous system (CNS), not including those delays attributed to nerve fibers. The plant includes both man and machine components. The human components are the eye mechanism, the arm mechanism, and nerve transmission delays. The machine components are the mechanical and electrical elements connecting the mechanism to the visual display. The human controller's strategy is presented as an effort to control the plant by optimally controlling a plant model located in the CNS and using the visual input as an error check.

This type of research effort is certainly most profitably

undertaken by those familiar with the techniques of analyzing control systems. Furthermore, it is just as certain that some familiarity with the principles of psychology, biology, and physiology are necessary. This is evidenced by the manner in which the system representation of Figure 2.4 is reoriented to that of Figure 2.5. Therein simple approximations are used for the known physiological processes of the subject involved in the task. Some of the more important features, based on experimental evidence and support from other interdisciplinary research efforts which were incorporated in the model, are given in the following list.

1) The operator tracks input signals using a series of control intervals and rest intervals.
2) Control intervals are of rather constant duration, and cognizance of an adaptivity requirement occurs in only one control interval.
3) The operator uses prediction in tracking random continuous inputs and evidences an error threshold below which no control effort is given.
4) The operator is capable of using continuous input information - this elicits the possibility of a "dual mode" realization since others propose a sampled-data form of information usage.
5) The operator maintains a mental image, i.e., a model of the process he is controlling.
6) The force signal is of a relay or "bang-bang" type with an amplitude dependent on the input and output (state)

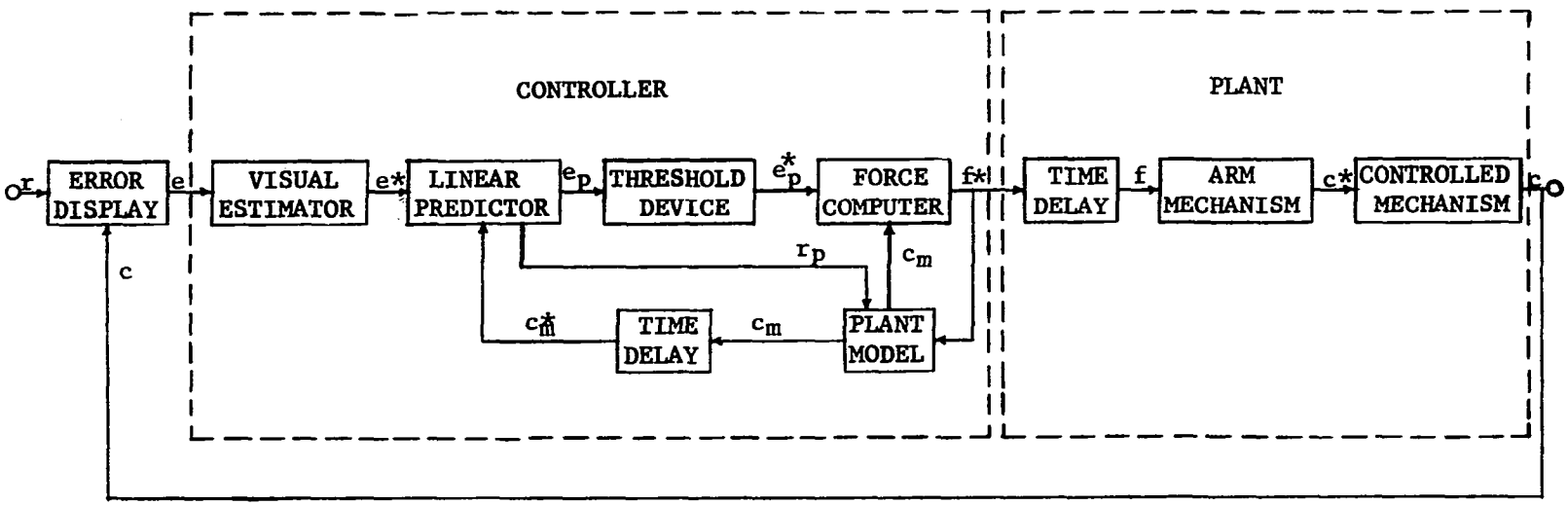

Figure 2.5. Proposed Block Diagram of the Human Operator

variables of the plant. For simple plant configurations, the operator appears to implement a control law which is optimum for some performance index.

The principles of simulation involved in this example are important. The resultant model provides a better understanding of the operator processes. The model is not asserted to be a unique representation and there are attributes that remain unexplained, such as, how the operator control law varies with the order of the plant.* Unlike other studies referred to in the report, the model was not oriented to the characteristics of any one particular operator - a concerted effort was made to discover operator invariances.

In retrospect, the ability to simulate the system in this case was dependent on two procedural factors. First, the manner in which the problem was empirically formulated makes excellent usage of the available technological advantage. By coupling the operator performance to a "hybrid" computer (analog and digital capability), it was possible to simultaneously generate and process a large amount of experimental data. Furthermore, with each initial model and its subsequent generations, there exists the practical possibility of an experimentally-based, comparative and contrastable performance analysis of the candidate model and the operator. Second, the behavioral aspects are amenable to control by the quasi-intuitive decision processes of the experimenters. This might be considered somewhat

---

* Further investigations of this aspect by K. S. Fu have been reported in more recent issues of the IEEE Transactions on Automatic Control.

artificial since it essentially dictates disregarding those operator responses which appear abnormal. However, the reasoning involved is not completely arbitrary and even the objector would eventually, though somewhat pathologically, be forced to consider operators who were either emotionally or physically involved (such as, ideational apraxia or paresis). These psychological aspects of the system are made a secondary consideration of the study by assuming such variations are small enough to average out. The physiological aspects are more important, and a step-by-step procedure is presented wherein the authors justify the simplification of the arm-mechanism combination to a pure inertia with time delay. This simplification, as presented, is based on selected references and receives further support when used in the simulation steps previously mentioned. Also, it is not to be inferred that the interdisciplinary background guaranteed the deduction of a model; rather, the empirical investigations of others were used as guidelines to avoid generalizations about external attributes which were contradictory to the partially known internal structure.

The Simulmatics Project

The third example relates a study performed by the Simulmatics Corporation and reported by de Sola Pool and Abelson (22), as principal investigators. This study was supported by the Democratic party during the 1960 campaign and the objective was to simulate likely voter behavior in order to predict the impact of the religious issue, contingent on the fact that it did become important. The facilities made available for this study were the Roper Public Opinion Research Center

and the M. I. T. Computation Center, plus an adequate staff of experienced political analysts and sociologists.

The procedure used was to make a "secondary analysis" of the old poll results and store these consolidated, simulated polls in a format which allowed quick access. From the large number of polls available in the archives of the Roper Center, only those polls which contained identification and voter intention data were used. This amounted to fifty usable surveys from 1952 to 1958 covering 85,000 respondents. Sixteen polls anticipating the 1960 elections were later added to this number. The total of sixty-six surveys represented well over 100,000 interviews.

In order to process such massive data, the results of the 1952, 1954, 1956 and 1958 polls were individually reduced to 480-by-52 matrices. The number 480 (rows) represented voter types, each being defined by socio-economic characteristics. A single voter type might be "Eastern, metropolitan, lower-income, white, Catholic, female Democrats" or "Border-state, rural, upper-income, white, Protestant, male Independents." The number 52 (columns) corresponds to what is denoted as "issue clusters". Most of these were politically motivated, such as, foreign aid, attitudes toward the United Nations and McCarthyism. Others included such familiar opinion indicants as "which party is better for people like you?", vote intentions, and nonvoting. Therefore, the issue clusters were political characteristics on which the voter type possesses a distribution.

Each element of a given 480-by-52 matrix contains four numbers. The first states the total of that voter type queried on the issue.

The second, third, and fourth indicate the fractions of the total who responded in favor, opposed, or undecided, respectively, about the issue. Also, a consolidated matrix was formed for all elections and trends were examined by comparison of the five matrices. Once formed, this format produced adequate data on small, yet politically significant, subsegments in the population. For example, an analysis on Northern Negro voters was performed based upon 4,050 interviews; the typical national sample survey contains approximately one hundred interviews.

The essential benefit gained from the reorientation of the large number of interviews involved was in the approximation of state-by-state results. Most of the large national sample surveys have too few cases to permit any significant analysis of state politics. The consolidation of the four polls had an average interview-per-state of about two thousand. This, however, is misleading since it occurred that in some sparsely populated states there were only three hundred to four hundred interviews and on a particular issue perhaps only one-tenth of these occur. Instead, by analyses of available poll, census, and voting data, estimates on the number of each voter type in each state were made. This assumes that a voter of a given type behaves the same as his regional peers regardless of his state. Simulated states resulted as the weighted averages of the voter types in that state. Thus, the difference in any two states is not ascribable to distinct inhabitants, but a difference in the proportions of different voter types. For example, an "upper-income, Protestant, Republican, rural, white male" was the same in either New York or Maine. This

enabled the use of all cases of a voter type from a particular region in arriving at conclusions for a state.

Then, upon the simulation of states, a second simulation was made in order to assess the impact of the religious issue. Examination of the religious simulation concurrently tested the effectiveness of the state simulation. The former represented a hypothetical campaign in which the only issues were party and Catholicism. The outcome was a ranking of Northern states according to an index of performance for Kennedy. After the election, a product-moment correlation over these states between the simulation index and the actual vote was 0.82. It was further pointed out that this encouraging result was based on data previous to October 1958 for the simulation.

The basic method of the religious simulation was a repetitive application of "cross-pressure" estimates. These estimates are intuitive guesses based on the knowledge and experience of analysts, the idea being that a series of these detailed estimates about how voter types will shift under particular kinds of opposing influences (cross-pressures) could be made and stored. These were then put together by the computer to produce an outcome of less fallible character than an over-all guess.

The cross-pressure estimates were performed by transforming the 480 voter types into nine possible subsets arising from a three-by-three breakdown on religion and party: Protestants, Catholics, and others; Republicans, Democrats, and Independents. For each of the nine possibilities, predictions were made. For example, it was assumed that Protestant Republicans were not under cross-pressure and percentage

equations for this voter type were used based on the 1956 poll results, reduced by the nonvoting record of this type. Another instance was the predictions for Protestant Democrats which was complicated by the cross-pressure phenomena. Percentage equations were developed based on the 1958 polls of Democratic voter intentions and extrapolations of subsidiary polls having questions concerning the religious issue. A considerably larger factor for nonvoting was used since other findings indicated that voters experiencing cross-pressure tend to stay home on election day.

Once a reasonable collection of equations was obtained for the nine possible conditions, the simulation required that the computer make 480 separate calculations. Each one used the appropriate set of equations which were evaluated from the data assembled about that particular voter type. This gave a 1960 vote estimate for each voter type for the hypothetical campaign being investigated. Weighted averages of these gave the state-by-state estimates and these estimates are almost twice as accurate as any of the traditional techniques which were based on poll results and quoted in the report.

The computer makes possible the precise conduction of long and complex chains of reasoning about the interactions of different processes. The inherent ability of computers to manipulate the data of simulated processes much faster than the process may be observed in real-time is denoted as "time-compression". This property has produced the possibility of using socio-psychological data (surveys in the present example) in ways far more complex than in the past. As a comparatively new research tool, the test of a computer simulation

is often simply successful use. Nevertheless, the computer is an instruction oriented device and in building a simulation, choices must be made as to which features are to be represented [Newell (71)]. Once the variables and their interrelations (which may be left as vague concepts in verbal models) are specified, exploratory runs are made which in some way attempt to substantiate the simulation. Further considerations of these last remarks are reserved.

Automatic Diagnosis of Vectorcardiograms

The fourth example of simulation discards again the emphasis herein on group behavior to describe an application of adaptive pattern-recognition techniques to the diagnosis of heart diseases, as reported by Specht (101). The theory and techniques of pattern-recognition are quite diverse due to the specialized interests of its proponents. Some of these are weather prediction experiments, recognition of printed characters and machine translation of languages, retinal transformation of optical inputs to neural signals, and "learning" control systems. Introduction to these areas which use pattern recognition as a part of model building may be found in the tutorial writings and articles of Duda, et al. (23), Akers (1), Wooldridge (113), and Sklansky (97, 98).

A partial motivation for the automatic determination of heart diseases is the difficulty found in training members of the medical professions to properly recognize and interpret the signals recorded on an electrocardiogram chart. Properties of these signals, along with other facts gained by either physical measurement, observation, or verbal communication, are used by the trained physician to make judg-

ments by mental correlation with previously observed characteristics of several possible diseases. In a generalized connotation, pattern-recognition is easily seen to be involved in the correlation among symptoms, test results, and a particular malady; however, since the human body is an extremely complex organism, an exact analysis based on simple tests is not usually possible and even diagnosis is often difficult to describe in a formal way.

The results produced by Specht (101) are based upon an adaptive sampled-data technique which is ideally suited to the type of situation described above. The considerations of possible alternatives are of some interest, but it suffices to say for now that in the simulation that follows a statistical realization proved to be inaccurate and a transfer-function, block diagram of exemplary signals is impractical.

Data was taken in the form of "vectorcardiograms" which is a simplification of the usual clinical electrocardiogram. An electrocardiogram (EKG) is a recording of the changing electric potential between various points on the surface of the body. A typical electrocardiographic examination may require twelve or more sets of sequentially recorded waveforms. The vectorcardiogram is the simultaneous recording of three spatially orthogonalized electrocardiographic wave forms.

An idealized waveform showing the relevant form of an EKG recording is given in Figure 2.6. The three segments of the waveform correspond to a definite sequence of events within the heart. An element in the heart (the pacemaker or timing node) initiates the waveform through excitation of the atria, denoted P. An activation

signal then triggers the ventricles into "depolarization", causing the large, fast-rise-time excursion denoted as the "QRS complex". About 100 msec after the QRS complex, recovery of the tissues takes place, denoted T.

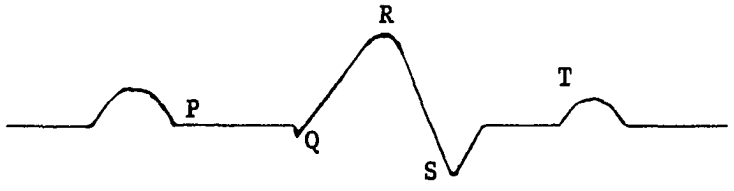

Figure 2.6. Idealized Electrocardiogram Waveform

The vectorcardiogram consists of three time-varying analog signals which are measured as the x, y, and z cartesian components (left to right, head to foot, and anterior to posterior, respectively) of the total electric field generated by the heart. Some noise contaminates these signals due to variations in the conduction properties of bones and tissues from one patient to another, and there also exists some distortion due to respiration and potentials generated by other than the heart muscles. These complications, plus the fact that substantial variations occur between normal patients in the time between P wave extinction and initiation of the QRS complex, have restricted the analysis to that of only the QRS complex. The vectorcardiogram involves less redundancy of data, and it contains phase information (upon transforming to polar coordinates) which is unavailable in the clinical electrocardiogram.

The task of simulation, which in a sense is partially developed at this point, is the separation of normal from abnormal patterns (QRS

complexes). The subsequent separation of abnormal patterns into groups representing different diseases is necessary as a later phase of the process. That simulation is plausible is assumed since a trained physician can evaluate the patient's condition with about 90% accuracy after studying the data. The difficulty occurs, however, in formalizing those properties which are separately invariant to both the normal and abnormal patterns, and, thereafter, establishing some measure of the differences in these indicants which allows reasonably correct predictions.

An initial simulation for determining abnormals was first presented by Dr. von der Groeben of the Stanford Medical School (107). First, it was estimated that practically all the information of the QRS complex was contained in the 0-100 hz bandwidth. Shannon's sampling theorem (90) then indicates that sampling intervals of 5 msec may suffice, which were taken up to 75 msec for the x, y, and z components after the onset of QRS. It was reasoned that since different time samples correspond to depolarization of different sections of the heart, the abnormal characteristics displayed by different time samples are relatively independent. The 15 samples of x, y, and z coordinates were converted into spherical coordinates and empirical means and variances from normal tracings were found. The boundaries of the resulting solids of normals were defined as $\pm$ 2 times the standard deviation in each of the three spherical coordinates. The solids of normal implied by this technique are convex regions* bounded by four

---

*A convex region is a set of points in an N-dimensional space with the property than any two points of the set may be joined by a straight line whose points are in the set.

planes and two spheres. Any vectorcardiogram whose sampled points stay within these 15 solids of normal is judged normal by this technique.

Although this approach may be acceptable for the proper types of data, objections arise because of an inability to substantiate the assumed statistics. An analysis of means and variances of normal subgroups having differing characteristics, such as sex, age, and body build, shows considerable discrepancy with the overall parameters. The generalization afforded by adaptive pattern-recognition is to relax the implicit restrictions on the decision surfaces and attempt to form absolutely deterministic surfaces using a convergent search technique and reliable data. An advantage gained hereby is the avoidance of falsely predicting abnormality; also, given an abnormal sample there is some possibility of predicting the malady depending on the decision surfaces.

The first adaptive simulation is realized by retaining the assumption that the solids of normals are appropriately determined by their convex hulls. These solids are then approximated with polyhedrons generated by enclosing the sample points of normal patients. The faces of the polyhedrons are formed by imbedding planes through outer points in the cartesian 3-space associated with each sample time. In this case, every combination of 3 points is used to determine a plane. For a simulation based on N normals (sampled signals), there are N sample points for each interval up through the 15th. For the ith interval, there are $N!/M!(N-M)!$ combinations of points, where N is the number of points to be enclosed, and M = 3, the number of points taken for each plane.

The general equation of the plane may be stated as:

$$ax + by + cz + d = 0 \qquad (2.6.1)$$

where x, y, and z are coordinates of any points in the plane, and a, b, c, and d are constants. Upon normalization with respect to the spatial coefficients in equation (2.6.1), the constant d determines the distance from the origin to the plane. Since one plane exists for each combination of three points, there are N(N-1)(N-2)/6 planes. Let the values of the constants as determined by equation (2.6.1) be denoted as a_j, b_j, c_j, and d_j. Then the distance D_{jn} of any point x_n, y_n, z_n from the plane (j) is given by

$$D_{jn} = a_j x_n + b_j y_n + c_j z_n + d_j. \qquad (2.6.2)$$

The sign of D_{jn} indicates on which side of the plane the point lies. From the assumed convexity, any plane having both positive and negative distances to normal sample points is not a face of the polyhedron. Only the planes which have points on one side are retained to form a polyhedron for each sampling interval. The fact that the number of planes to be tested increased approximately as the number of intervals times N^3 indicates that a digital computer is essential.

Once the polyhedron boundaries are established, the performance of the simulated diagnostician is tested with new data. In determining the boundary planes, a convention is established to direct the normal of each face outward, then a normal sample point is indicated if all distances to the boundary planes are negatives. The maximum of these distances empirically determines a level of confidence. If the new data causes poor performance, the boundaries may be expanded by adjusting the associated d's of the planes.

The process of realizing the initial set of boundaries is denoted as first-order training and the tests with new data indicate the "generalizing" capability of the adapted simulation. The d-values of the boundary planes are denoted as "threshold" levels and the corresponding spatial coefficients (a_j, b_j, and c_j) are the "weights". Informally, the empirical determination of the thresholds and weights during training which best separate the normal points from abnormal is the purpose of adaptive pattern recognition. The motivation for the above terminology is easily identified with the adaptive linear threshold element (adaline) shown in Figure 2.7a. One such threshold element is required for each hyperplane decision surface in the n-dimensional space of the input variable and a multiple adaline (madaline) structure for categorizing normals is shown in Figure 2.7b. The adaptor segment represents a method by which the weights and threshold of the adaline may be adjusted during training that improves the overall decision performance. After training, the madaline operates as a fixed entity which converts the input information into output information.

The principal attractions of adaptive pattern recognition include the possibility of making decisions (classifying patterns) with relatively few "a priori" specifications about parameters. Also, the inherent structure leads to a parallel processing of information which is faster than sequential techniques. The major problem areas are determining the appropriate format for processing a given set of data and, once this is specified, determining the proper adaptation technique for the preprocessed data. In Specht's (101) investigation

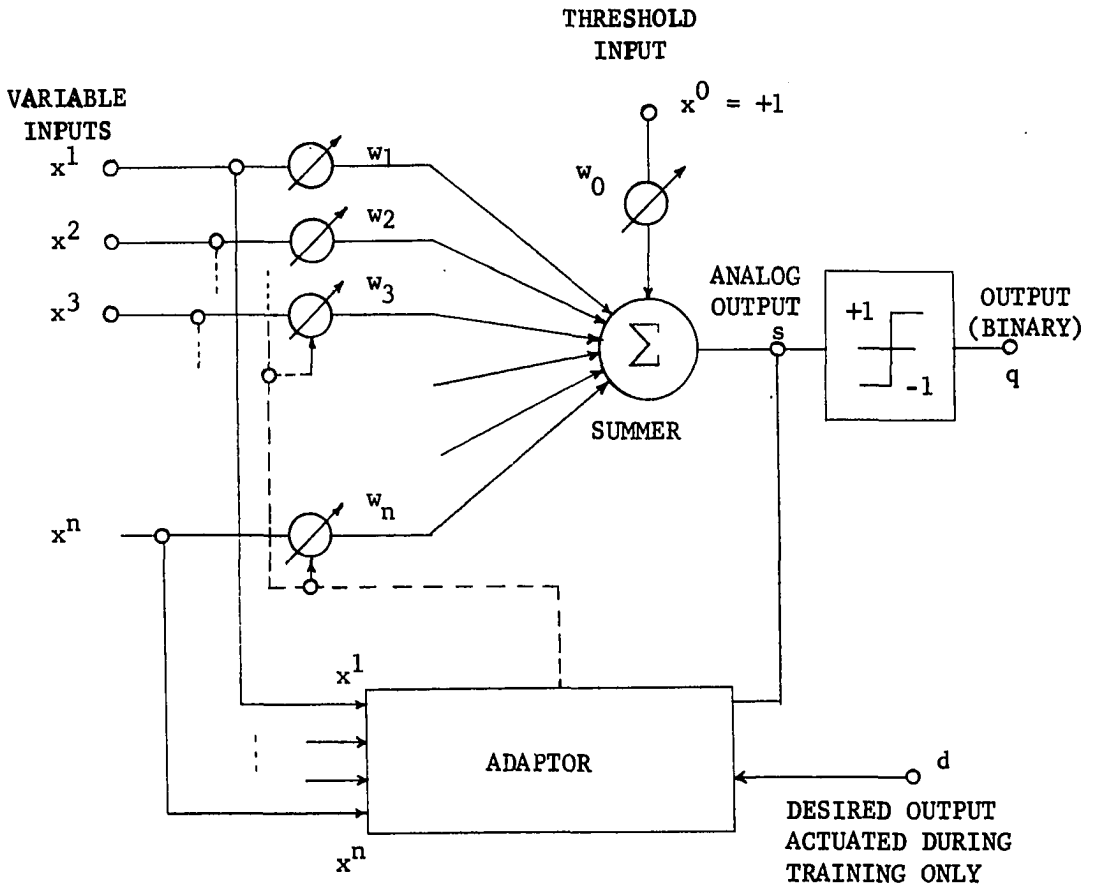

Figure 2.7a. Basic Adaline Decision Element

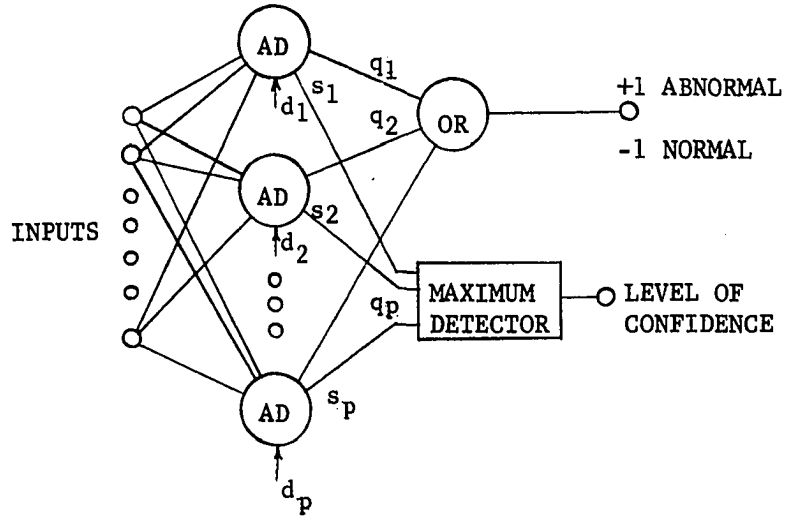

Figure 2.7b. Madaline as OR-Connected Adalines

of the vectorcardiograms, for example, much better performance was obtained when instead of a fifteen term sequence of three dimensional vectors, each QRS complex was processed as a single point in a 45 dimensional space. The increased number of dimensions also greatly increased the number of calculations required in the polyhedron method and a sequential technique of adaptively determining the hyperplanes was introduced. The decision surfaces of this method are based on the weight adjustments required to minimize the mean square error of the classification during training. As a means of comparison, the best recognition rate for the polyhedron method based on a training set of fifty females was 74 per cent whereas the sequential adaptive processing achieved 93 per cent.

Summary Remarks on Simulation Examples

Another important effort, recently published, concerns the simulation of role conflict by Gullahorn and Gullahorn (40). Their models are also based on Homans' theory (47), depicting human behavior as a function of its payoff; that is, an individual's responses depend on the quantity and quality of punishment and reward that his actions elicit. By successive reformulation of the computer simulation, they have produced increased correlations between the behavior of the simulated and real individuals.

A computer simulation of a dyadic social process has been reported by Coe (17). The simulated individuals (named Alter and Ego) are involved in a voluntary relationship to attain the same goals which each perceives as requiring cooperation for the collection of

rewards. Goal attainment does not involve any individual cost as in game-type simulations (competitive goals); however, the simulated individuals must negotiate the course of action based on their expectations of success. The failure to attain a goal leads to frustration and possibly aggression; success leads to reinforcement and learning with an associated decrease in the level of frustration.

Although it is not logically essential to simulation, all examples, except the first, introduced in this chapter depend on computers as an investigational tool. The last two have statistical orientations and require a simulation structure capable of internally generating stochastic variates. The computer-based type of simulation, although a relatively new tool for the social sciences, has already proven useful for training and research concerning organizational, psychological, and social processes [Naylor et al. (70); Kemeny and Snell (52), and Guetzkow (38)]. That the computer is not an automatic simulation generator is a fortunate fact that occasionally requires exposition [Grenberger (37)]. Granting its undeniable armipotence with computational and accounting tasks, the computer, as yet, has to be programmed with complete instructions. This forces a choice at least implicitly of both the variables and their interlocking; the computer cannot transcend the program presented to it or the data which it analyzes.

That the empirical forms of simulation are costly should be completely in evidence at this point. Furthermore, practically any form of behavioral investigation (e.g., replication of group processes in a psychological laboratory) to which computer capabilities are added

will become more expensive. Cost in most instances, however, is a relative consideration between available techniques and a prognosticated value of the results. The point of decision is most often whether or not a candidate project shows promise of obtaining valued results commensurate with the effort involved; it also is desirable that there exist some face-saving alternative should a project be undertaken which elicits an impasse.

With a cautious disregard of generalities, simulation, as a scientific tactic, seems to perform best when most of the elements and connections of a system are known, and the intention is to match some well-defined system behaviors by trial and adjustment. In contrasting the four principal examples of this chapter, it is intuitively evident that the second and fourth adhere more closely to this simulational porism than the first and third. One of the reasons for this is that in the Simon-Homans' model, the first, there did not exist any supporting data in quantitative form (only observational). In direct contrast, the Simulmatics Project, the third, required judgmental preprocessing by an abundant staff. On the other hand, both the Fu-Knoop model and Specht's simulation possess the capability of processing an external form of quantitative data (i.e., an "on-line" capability) which is contiguously associated with an internal phenomena. That this property is not sufficient for successful simulation has been lucidly pointed out by Walter and Adey (109).

At the University of Oklahoma, a bond of interdisciplinary study has evolved, named the Systems Research Center, to investigate models of group behavior. Recent emphasis of their contract research

has been to apply computer simulation to psychological warfare and counter-insurgency; however, one of the intermediate tasks has been the analysis of group processes. The study of these processes presents a host of problems which escape solution, not only by means of classical techniques, but even formulation [Bellman (5)]. One promising technique has been presented by Kern (53). His thesis is to utilize the learning properties of pattern recognition devices for determining the relational dependences of social group characteristics. Further consideration of his method is undertaken here beginning with the next chapter.

CHAPTER III

SIMULATIONAL ASPECTS OF THE ROBBERS CAVE EXPERIMENT

The Robbers Cave Experiment, previously referred to in Chapter I, was performed by M. Sherif, et al. (93). It represents one of the few studies in small group processes with a relatively complete account of formation, interaction, and termination of groups where a concentrated effort was made to avoid delineation of the individual in a group environment. In the presentation that follows, a great deal of reliance is placed on the report of the Robbers Cave Experiment. For the reader completely unfamiliar with its contents, there is little recourse but to encourage its consideration. Nevertheless, some of the principal attributes explicitly related in the body of the report require presentation. This is done in order to establish and evaluate, at least intuitively, the forthcoming Robbers Cave simulation with respect to other simulations.

The organizational aspects of the experiment were well conceived and carried out; they were based upon the previous experience of the research staff with similar experiments. Considerable preparation was required in gaining financial support, in selecting the experimental site (Robbers Cave Park, Wilburton, Oklahoma) for an adequately controllable environment, and in choosing the sixth grade boys

which were to evolve into experimental groups. C. W. Sherif, et al. (92) later relate, "...the subjects were preadolescent boys, selected so as to be unaquainted, similar in background, normal in school and peer association, from stable family backgrounds, and above average in home, school, and neighborhood." This procedure was to insure the colligation of homogeneous group elements in order that behavior which is in some sense deviate would either not occur or average out.

These subjects were kept unaware of any research activity associated with their summer camp. They were transported to camp by bus in two separate groups and even before arrival the initial processes of group activity were observed. It cannot be assumed that the boys came into the incipient group structure without precursively formed attitudes since some of these indicants were used in choosing them. The expectations of camping, being on their own, participating in competitive games, and about fairplay and sportsmanship were in all their backgrounds; however, they could not have had any attitudes about each other as individuals or about the groups that would be formed.

One particularly important attribute of the experimental procedure was the duty of the research staff to control the activities of the two groups so their in-group relations would form as naturally as possible. These "natural" environmental stimuli occurred as tasks that required various degrees of cooperation, initiative, organization, and internally formed leadership. Throughout the experiment, independent observations of these group and individual behaviors were made by the staff, thus decreasing any tendencies to be observa-

tionally selective. Each staff member made daily recordings of observations according to his designated responsibilities and these were later collated into the aforementioned report.

Objectives of the Experiment

The rationale used in performing the experiment is based on extracted generalizations from previous sociological findings on small groups and those relevant principles emanating from the psychological laboratories. Since this experimental approach elicits a richness of behavior untapped by others, the hypotheses were carefully framed in order to avoid generalizations from the individual to the group level which might be contradicted. Thus, for instance, the study of attitudes toward groups is considered an extension to the level of intergroup relations of the psychological principle that such activity is predicated by the frame of reference in which it occurs. Therefore, the functionally related totality of internal and external factors operant in a situation determine the reactions.

In order to illuminate such attributes, the experiment is described in three non-distinct phases. Phase I (7-8 days) involves the formation of internal relationships for the two separated groups. In Phase II (7 days), the two groups are brought into contact and given competitive, friction-producing goals. Phase III (5 days) terminates the aggressive interactions between the two groups by the introduction of cooperative, friction-reducing goals (denoted superordinate goals). This categorization into phases is intended to relate the organizational structure used by the researchers to guide or control the

two groups to the experimental goals.

The boundaries of each phase are not clearly discernible in terms of reactions by the groups. A major objective is to allow the cumulative effects of previous experiences and the internally prevailing perceptual constructs to determine a response to any given situation. That is to say, a continuity of the naturally formed group norms was encouraged to any reasonable extent which was not either physically dangerous or irrevocably destructive to either the group members or the groups themselves. This is intentionally in contrast to the authoritative interruption of the interaction processes which often occurs in the small group replicates studied in the laboratory type environment.

The fundamental approach was to carefully introduce problem situations appropriate to the phase in question. The ensuing activities of discussion and reaction to these environmental stimuli were left to the subjects themselves as much as possible. Caution was exercised to insure reliability by avoiding redundant forms of problems which might elicit a precognitive response pattern; this is somewhat analogous to that avoided by Knoop and Fu (55) in simulating a human operator (Example 2, Chapter II). The reliability referred to here concerns the manner of obtaining a group structure. It is important that the channels of influence and relational dependencies are developed in such a way that an emergent leadership hierarchy or standardized problem-solving technique is relatively independent of either a given environmental situation or a particular individual's capability. Thus, a distribution of activities, such as swimming, meal

preparation, skits, baseball, tent pitching, treasure hunts, and so forth, were introduced. This caused the individual members to adopt attitudes, procedures, and norms for their groups in relation to their total environment.

The two groups of boys, initially matched and chosen from about 200 applicants, named themselves the Rattlers (R) and Eagles (E) toward the end of Phase I, and are thereby conveniently referred in reporting activities in all phases. Individual names, followed by a parenthetical group identification except in some obvious cases, are used to report those instances where behavioral phenomena occurred that are relevant to the experiment. On a few instances, this involves the description of an individual reaction to an environmental situation; however, the overriding purpose is to relate those observable conditions which were either precursory to or indicative of a posited group property or empirical hypothesis.

Most of the experimental objectives were explicitly stated and embody the verification of social and psychological principles which were regarded by the experimenters as fundamental to the understanding of intergroup processes. Explanation of these concepts is centered around verbal hypotheses, the principal one of which concerns the reduction of intergroup conflict in the last phase of the experiment. The verification of all hypotheses was by observation; other laboratory-types of verification such as sociometric choices and judgmental indices were obtained as supporting data provided their interjection did not interrupt the natural appearance perceived by the subjects.

The verbal hypotheses are categorized according to Phases I, II, or III and numbered. It is evident that the experimenters did not intend a strict classification of hypotheses according to phases since they are accumulative. In a similar manner*, the verbal hypotheses are quoted from M. Sherif, et al. (93) herein as follows:

> H-I.1 A definite group structure consisting of differentiated status positions and reciprocal roles will be produced when a number of individuals (without previously established interpersonal relations) interact with one another under conditions (a) which situationally embody goals that have common appeal value to the individuals, and (b) which require interdependent activities for their attainment.
>
> H-I.1a If a definite group structure develops, it will be reflected in a consistent pattern in directions of communication. The specific pattern in direction of communication will be as follows: The higher the status of a group member the greater the frequency of suggestions (for group activities) addressed to him.
>
> H-I.1b (a) The higher the status of a member in the group, the greater his tendency to overestimate his performance in an activity the group engages in. (b) The higher the status of a member in the group, the greater the tendency of other group members to overestimate his performance. (c) The lower the status of a member in the group, the less his tendency to overestimate his performance in an activity the group engages in. (d) The lower the status of a member in the group, the less the tendency of other members to overestimate his performance, even to the point of underestimating it.
>
> H-I.2 When individuals interact under conditions stated in hypothesis 1, concomitant with the formation of group structure, norms will be standardized regulating their behavior in relations with one another and in practices and activities commonly engaged in.
>
> H-II.1 In the course of competition and frustrating relations between two groups, unfavorable stereotypes will come into use in relation to the out-group and its members and will be standardized in time, placing the out-group at a certain social distance (proportional to the degree of negative relations between groups).
>
> H-II.1a In-group members will tend to overestimate the number of

---

*An H denotes hypothesis followed by a phase category of I, II, or III, and then a numerical index. The appearance of lower case letters indicates an auxiliary or conditioned statement.

items purportedly obtained by in-group members and underestimate the number of items attributed to out-group members.

H-II.1b The degree of this tendency manifested will vary according to the status (low or high) of in-group and out-group members in question.

H-II.2 The course of relations between two groups which are in a state of competition and frustration will tend to produce an increase in in-group solidarity.

H-II.3 Functional relations between groups which are of consequence to the groups in question will tend to bring about changes in the pattern of relations within the in-groups involved.

H-II.4 Low status members will tend to exert greater efforts which will be revealed in more intense forms of overt aggression and verbal expressions against the out-group as a means of improving their status within the in-group.

H-III.1 It is predicted that...contact...in itself will not produce marked decrease in the existing state of tension between groups.

H-III.2 When groups in a state of friction are brought into contact under conditions embodying superordinate goals, the attainment of which is compelling but which cannot be achieved by the efforts of one group alone, they will tend to cooperate toward the common goal.

H-III.2a Cooperation between groups necessitated by a series of such situations embodying superordinate goals will have a cumulative effect in the direction of reduction of existing tensions between groups.

Now, with regard to the above, a statement of intended purpose is not easily misinterpreted and follows, again, from M. Sherif, et al. (93): "...The attempt in this study is to trace the formation, functioning, and change of attitudes towards one's own group, toward its various members, and towards out-groups and their members within the setting of group interaction processes, and as consequences thereof."

Reorientation and Content Analysis

Up to this point, the description of groups and their inter-

actions attempts to reflect some ideas and interpretations of the original investigators for the Robbers Cave Experiment. Presently, these are to be compounded and transformed for the purpose of manipulation on a computer which in turn may exhibit the induced dependencies. Some explanation is in order, however, since a variety of pragmatic decision procedures prevail.

The greater part of the conceptual relevance of a group is brought into focus through a definition, such as, that tendered by M. Sherif, et al. (93):

> A group may be defined as a social unit (1) which consists of a number of individuals who, at a given time, stand in more or less definite interdependent status and role relationships to one another and (2) which explicitly or implicitly possesses a set of values or norms of its own regulating the behavior of individual members, at least in matters of consequence to the group.

This statement gives logical impetus to the topic of discourse in an unambiguous manner; however, a method for the quantitative ordering of any group properties is not clear and further abstractions are required before any operational entities are produced.

In the latter part of Chapter II, mention was given to the effort of F. J. Kern and others at the Systems Research Center (SRC) of the University of Oklahoma in developing models of the Robbers Cave groups. Their effort has been toward the formulation of external models which behave like groups (simulates) but without any exhaustive attempt at internal resemblance (replicates). By dint of analogy, this point may be emphasized by momentarily recalling the Simulmatics Project (cf. Chapter II, Example 3). The modeling of voter behavior for individual states would entail some imponderable complexities,

yet some very useful results were obtained by temporarily avoiding a direct analysis of each state and reorienting the available information into a number of relatively simple analytical decisions. The simulated states were then obtained through individual distributions of the decision elements (voter types).

The analogy with group behavior is not complete since the modes of information transmission are quite dissimilar. The Simulmatics Project being based on interviews which are more easily quantified than the verbally described group interactions. Nevertheless, the organizational approach of heuristically structuring an inquiry into associations between observed and quantitative entities through possibly numerous computer manipulations is logically sound. An analysis of the quantitative homology is considered a qualified success even if it reveals that the originally assumed associations are invalid. One that imparts further information or brings to light some internal dependencies (or contradiction) that were indiscernible in the qualitative context is of greater value.

It has been observed by Kern (53), and others in somewhat similar contexts [see Helmer (43), Newell and Ernst (72), Zadeh and Desoer (117), Weinberg (110), and the concluding remarks of Example 1, Chapter II], that the analysis of group and behavioral problems might be profitably extended through a reformulation in terms of the scientific constructs used in control engineering and systems analysis. The Robbers Cave Experiment is particularly susceptible to this and represents one of the principal considerations for choosing it.

This simulation technique evolves as an essentially two step

process: first, the observed phenomena of the social groups intra- and inter-relations are analyzed for informational content (according to the empirical hypotheses of the theory under scrutiny) and assigned quantitative values from ordinal scales [cf. Stevens (104)]; then, the results of this content analysis are studied with the expectation of discovering both the tacit dependencies inherent to the analysis and any inadvertant contradictions which emanate from the theoretical structure itself. This procedural schema is not logically dissimilar to any scientific pursuit. A somewhat more general description is required since an accepted calculus of group interactions has not been established.

A compendium of the content analysis of the Robbers Cave Experiment is presented in Appendix A. This material is the result of the concerted efforts of Dr. J. D. Palmer, Dr. R. A. Terry, Dr. J. A. Nickel, and Dr. F. J. Kern, of the research staff at the Systems Research Center, University of Oklahoma. The content analysis is abstracted in two principal parts. The first is the delineation of those observational events which relate in some manner to the hypotheses of each phase followed by the quantification of variables defined below. The second is a sequential listing of quantifications which correspond to the observed events and relate integral values of the associated group interaction variables. These were obtained through a posteriori conditions of the experiment and were categorized as either dependent or independent. This categorization corresponds to the indirect or direct association, respectively, of the group variable with the actions, guidance, and environmental stimulations accorded to

the experimenters.

The dependent variables*, denoted by a post-superscripted x, are described as follows:

STRUCTURE**(x^1): The unity of a group which is organized under a leader, with different levels of status (esteem) and responsibility assigned to the members. The ordinal amount of 'structure' is inferred from: (1) The continuity of leadership; (2) The breakdown of leadership shown (a) when another individual lower in the organization makes a decision that properly belongs to the leader or (b) when the leader fails to carry his responsibility (e.g., is fearful, homesick, depressed, etc.).

MORALE (x^2): Belief that one's own group can win. It is inferred from the satisfaction of a group with its leaders and from the intragroup friction (blaming, etc.)

ATTITUDE (x^3): Positive vs. negative feelings towards the other group - inferred from value-laden adjectives used to describe other group.

FRUSTRATION (x^4): The level of aggressive potential in a group inferred from the amount of physical punishment or property damage the group inflicts on the other group.

The independent variables, which are also implied in the original hypotheses, are similarly denoted and described as follows:

GOAL TYPE (x^5): A situational event wherein the group(s) recognizes that successful attainment of the perceived goal requires either

(1) a cooperative effort which could result in mutual (possibly dissimilar) rewards,
(2) a neutral effort which possibly indicates that within the particular event the goal character was not recognized, and in any case indicates that it is not (1), or,
(3) a competitive effort which could result in only unitary rewards and, at least momentary, loss of stature (derogation);

GOAL VALUE (x^6): The comparative preferences for certain classes of activities over others within the bounds of the environment

---

*The objector may prefer the term indicant, denoting an observable or inferred attribute.

**These descriptions are based on informal discussions with Dr. R. A. Terry in March, 1967 and clearly reflect the originals which appear in Kern (53).

(possible choices);

GOAL ATTAINMENT (x^7): The recognition by the group(s) that activities associated with an event of the recent past
(1) have been successful in attaining a goal,
(2) have resulted in a tie because of unrecognizable or inconclusive evidence before a redirection of interest and effort toward another goal, or
(3) have been unsuccessful in attaining the associated goal;

PRESENCE (x^8): The occurrence of an event requiring recognition or interaction with another group (or its members) which has not been secured as a natural part of the environment; and

GOAL TYPE SUCCESSIONS (x^9): The consecutive number of events wherein a goal has been categorized [as to goal type (x^5)] and said categorization has not changed.

The fact that more or fewer entities are plausible is obvious. The above seems to comprise a reasonable trade off betwen simplicity and reality. The burden of relevance, however, is on what can be accomplished. Although previously unreported by the SRC staff there must also exist more fundamental considerations of measure which are implicit to any valid quantification. These aspects are discussed presently. The associations of the chosen variables into classes of independent and dependent are assumptions based on the text of the experiment, e.g., the ability to control group events without discordant response and to record expressions of hostility toward outgroups.

Further scrutiny of the variables is in order and it is suggested that the reader do so in light of the definitive explanations that follow. For the purpose of simulation, measurement* is considered

---

*The following remark attributed to Cassirer by Caws (13) seems appropriate: "...It is not so much with the sensuous instruments of measurement that we measure natural processes as with our own thoughts."

as the assignment of numbers to objects or events according to any chosen rule. The value of a measure, and thereby the dictum of its choice, is in the ability of an experienced advocate to gain understanding and relate information.

Thus, for the events abstracted from the experiment, there is believed to exist reasonable basis for the assignment of numbers from a rather restricted range of integers for each variable $x^1 \ldots x^8$, described above, x^9 being related by definition to x^5. The type of scales to which these assignment procedures belong are ordinal scales, to which previous reference has been made [Stevens (104)]. The essential requirement for the use of a measure according to an ordinal scale is the ability to ascertain order (i.e., for any two elements an object or event pair, a decision can be made that the corresponding measure values are either equal or one is greater than the other). For example, in measuring an event it is assumed possible to consistently assign numbers from the set (1, 2, 3) for the variable x^5 based on a one-to-one correspondence with the constructs (cooperative, neutral, competitive) which are clearly ascribable from the context of both the hypotheses and the environmental setting.

A summary of the numeric values assigned to each variable is presented as Table A-1 of Appendix A. Table A-2 for the Rattlers and Table A-3 for the Eagles are listings of the experimental events of the content analysis in terms of those values. Thus, the tables contain information denoting events as rows and the previously described variables as columns for each group. Accordingly, the fortunes of each group may be compared and contrasted within these boundaries

since certain variables are classified as independent (stimulus) and others as dependent (response). The most apparent result is that now a familiarity with arithmetic can substantially decrease the mental correlation required in obtaining and understanding both lateral (similar event or stimulus conditions) and longitudinal trends.

Simulation of Abstracted Events Using Adaptive Pattern Recognition

Further abstraction requires careful consideration because of the attendant inability to establish these group variables (as previously discussed) in terms of more fundamental entities. Recognition of this and other conditions led Kern (53) to consider pattern recognition as a means of analyzing a given set of variables and data.

For the moment, reconsider the vectorcardiographic analysis, discussed in Example 4 of Chapter II, where the principal objective was the efficient determination of abnormalities based on a transformed (sampled) set of data given knowledge of the physiological properties associated with the original forms. All data are transformed according to the same empirical rules. Then, a decision structure (simulation) is adaptively sought which compares favorably in most respects, but with distinctive advantages in some, to the original or natural system. As pointed out by Nilsson (74), the simulation needs to be adaptive in these nonparametric cases wherein the characteristic values leading to decisions are not known a priori. The tack being used is to select representative data, denoted a training set, and methodically change a madaline structure until sufficient capability is obtained with the training set. Then, at the end of training,

the structure remains fixed and new data introduced. The expectation is that a reasonable comparison of performance with the new data to that of the training set will exist.

This generalization property helps to point out an assumption that is both basic to science and fundamental to pattern recognition (i.e., a tautology). Namely, the input vector x elicits an output y, but associated with x is a neighborhood of elements which will also elicit a similar output. In other words, some local continuity or levigation is demanded of the measurement rule used in a simulation. The vectorcardiographic analysis helps exemplify this point - the assumption therein being expressed as a restriction of normals to convex regions. A logical equivalence of these assumptions can be constructed based on the physical measurements used. Finally, it can be observed that the above condition reflecting the information transmission of a measure is essentially a necessary consideration of a valid simulation since too slow a sampling rate transmits insufficient information for correct recognition.

Insofar as the theory of pattern recognition is concerned, informal descriptions are related to two principal entities, a receptor and a categorizer. Figure 3.1 shows a block diagram denoting these

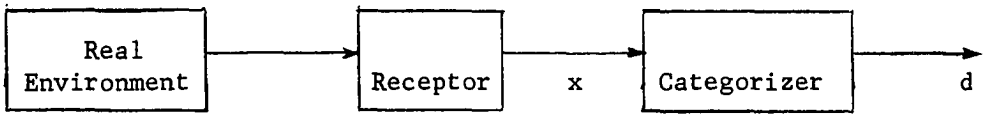

Figure 3.1. Basic Organization of Pattern Recognition

concepts. The receptor is used to measure environmental attributes and transmit the information concerning a process or system for presentation

to the categorizer. The categorizer applies some sort of decision criterion to the receptor output in order to produce a desired classification.

The receptor output is denoted a pattern, x, and generally is considered an ordered n-tuple of real numbers $(x^1, x^2, \ldots, x^n)$. Some authors have given primary emphasis to coding, switching, and character-recognition types of problems and consider the categorizer input may always be taken as a binary vector [cf. Duda, et al. (23), Chow and Liu (16), and Hu (49)]. Others, such as Highleyman (45), Widrow (111), and Rosen (84) have considered the components of x as discretely quantized or continuous.

The categorizer is tacitly understood to implement a set of scalar products

$$S = \left\{s: s = \langle f(x), w\rangle = f^1(x)w_1 + f^2(x)w_2 + \ldots + f^k(x)w_k\right\} \qquad (3.1)$$

in order to obtain any of the classification decisions, d, of an allowable set, D, as a result of a transformation. As Nilsson (74) points out, f(x) may be any vector-valued function of the pattern, x, which leads to a decision; however, preference is given to the linear functions $f^i(x) = x^i$ for $i = 1, 2, \ldots, n$ because of simpler interpretations in the coordinate space of x. Thus, in equation (3.1) above, $k = n$. Informally, an implicit correlation is given by the relative values of the "weight" vector coordinates, w_i, for the dependence of the decision d on the coordinates x^i, $i = 1, 2, \ldots, n$.

The specification of the categorizer output, d, which has been termed the decision, depends to a large extent on the application. A standard approach has been to consider d as a binary encoding of the

classification information similar to that used in the vectorcardiographic analysis. The adaptive pattern recognition techniques based on training are then used when a paucity of a priori assumptions concerning the receptor output exists; the associated inverse problem of adaptively determining the decision criteria is considerd a means for validating a process identification or set of property measures [cf. Marill and Green (60)]. This latter consideration is related to the specification of feature detectors for the receptor and has been described by Sklansky (98) as one of the open problems in control theory.

Returning to the simulation of the Robbers Cave Experiment, the quantification of variables is clearly a set of measures which correspond to the receptor output of Figure 3.1. However, the measures themselves are of a tentative nature and the paramount importance of a pattern recognition application is in the prospect of additional insight into the measurement problem.

The seemingly straightforward approach, then, is to form those variables considered to be dependent as the categorizer outputs and adaptively train each one on a subset of the other variables. With reference to the components, x^1, x^2, ..., x^{13}, defined previously in this chapter and in Appendix A, the components x^1, x^2, x^3, and x^4 are simulated with those subsets chosen by Kern (53) as shown in Table 3.1. The particular categorizer used is termed by Nilsson (74) a matched-filter-logic machine and the training procedure is a variation of incremental error correction.

Table 3.1. Functional Relations of Dependent Variables
[by permission of F. J. Kern (53)]

Dependent Variable	Tentative Function
Structure:	$x^1 = F_1$(type: x^5, value: x^6, attainment: x^7, presence: x^8, number times: x^9, frustration last time: x^{10}, average structure last three times: x^{13})
Morale:	$x^2 = F_2$(type: x^5, value: x^6, attainment: x^7, presence: x^8, number times: x^9, frustration last time: x^{10}, average morale last three times: x^{12})
Attitude:	$x^3 = F_3$(type: x^5, value: x^6, attainment: x^7, presence: x^8, number times: x^9, frustration last time: x^{10}, average attitude last three times: x^{11})
Frustration:	$x^4 = F_4$(type: x^5, value: x^6, attainment: x^7, presence: x^8, number times: x^9, frustration last time: x^{10})

Most of the important advantages of a matched-filter-logic configuration have been described by Kern (53). Two disadvantages that are eschewed here are as follows: First, both the input and output of a matched-filter-logic categorizer require binary encodings - this is normally a matter of convenience when the primary objective is the external performance of a task; however, ascertaining the relative value of the variables by the weights of their binary equivalents is

cumbersome and it is not obvious that the original properties of the measures are preserved. Second, the usual structural realization of a matched-filter-logic machine requires an initial specification as to the number of hyperplanes which restricts its performance with the output code. Conversely, the specification of an output code restricts the decision properties; most heuristic applications favor the latter even though a complete theory for specifying decision codes with respect to categorizer inputs is not known. These two facets are not known to be wrong with respect to the Robbers Cave simulation; yet, neither one has been shown to be correct. In the next chapter, a different pattern recognition technique is introduced which operates directly on the coordinates of an event description and which also attempts to minimize the number of hyperplanes required for a given output encoding. The same output codes are used in order to compare the new approach to that previously presented by Kern (53).

CHAPTER IV

A FIXED ELEMENT PROCESSOR FOR THE ROBBERS CAVE SIMULATION

The present intention is to describe most of the details and necessary considerations for the computerized portion of the simulation of the Robbers Cave Experiment. The description of situational events as presented in the content analysis of Appendix A is assumed to be a reasonable abstraction of the observed group interaction phenomena. Like other investigations, the purpose of this study is not the reduction of an observational to a mathematical system; rather it is to investigate and reduce an abstraction of the observed phenomena to informative principles. This may require the use of associated properties from other systems including mathematics, hence, simulation. This conceptual endeavor has not originated or been completed herein; yet, the application of simulation techniques opens avenues of understanding that have not appeared previously.

In a comparable manner to the procedural diagram of Example 1 in Chapter II, Figure 4.1 relates the stages of simulation that have evolved for the Robbers Cave Experiment. The principal development of this paper is indicated as the last step. This element has been denoted GELISIMA as an acronym for a generalized linear-element simulation machine. Certainly, the most critical and hardest to verify of these

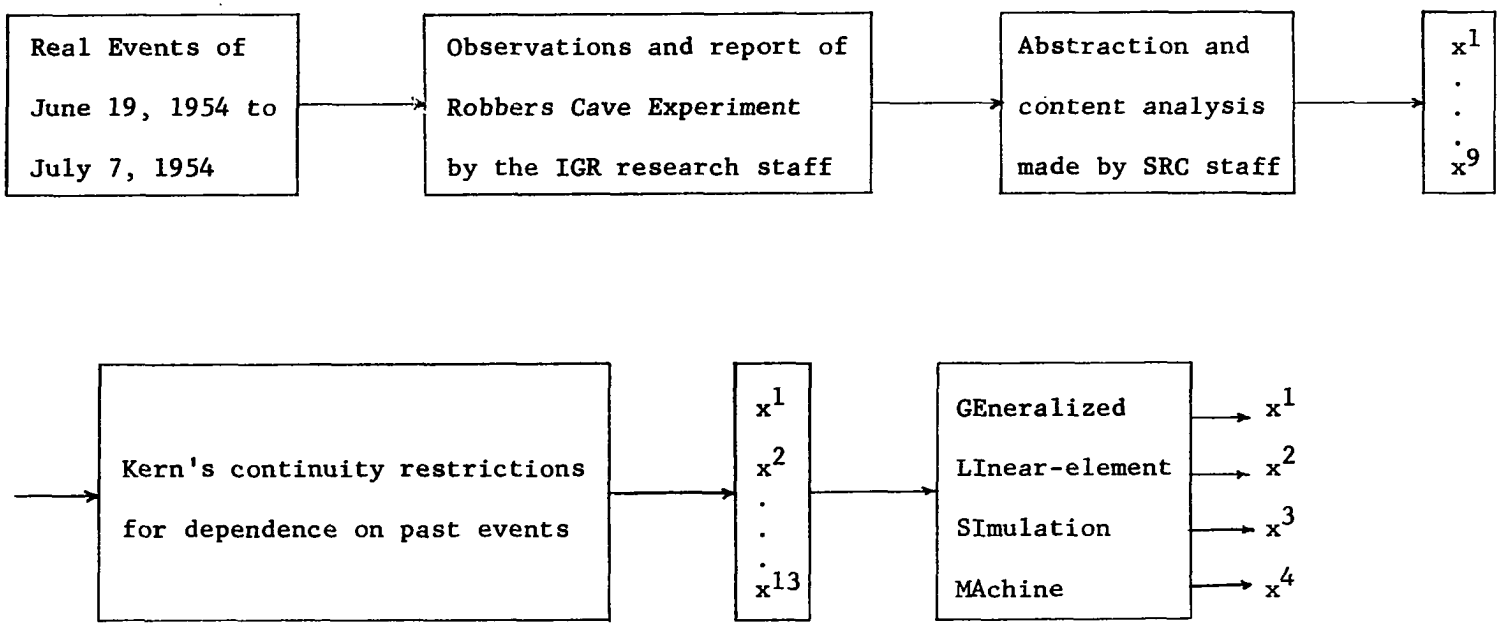

Figure 4.1 Abstraction Process of the Robbers Cave Experiment

abstractions is the quantification of attributes (cf. Chapter III and Appendix A) which are indicated as components (x^1, x^2, ..., x^9). The possibility of repeating the experiment several times with the intention of verifying these quantifications is impractical in terms of cost. At any rate, such an endeavor should have the verification of a theory of measure as an objective.

Another possibility is the comparison of a number of analyses to determine the "core of meaning". This was first mentioned in Chapter II and seems to be more plausible since it is possibly much less expensive. There are, however, some obstacles that could become insuperable unless carefully avoided. For example, if one sent the following request to several colleagues, "Please measure your desk and return the result.", he should not be surprised to receive answers such as 32 by 50, 2.5 x 60 x 2.6, six drawer roll-top, etc., along with some acrimonious inquiries. The point is that a rather rigid frame of reference is required. Even a restriction to replies of the form (length, width, height) could result in a variety of dimensional units. Before any comparison, either a linear transformation to a standardized set of units or a more restricted request is necessary.

Any such technique for comparing analyses of the Robbers Cave Experiment is of questionable value. One important aspect, in contrast to the above example, is that dimensional transformations (e.g., twelve inches per foot) are not known to be valid. However, some form of comparison is desired that relates to the principal objective which is the corroboration of quantified conceptual entities as fundamentals of group phenomena. If any further analogy is meaningful for the above

example, it appears that restrictions must be carefully imposed. Too few restrictions may elicit illogical comparisons, and too many restrictions may force the result to be independent of the observed phenomena. The final alternative is to attempt a verification of analyses by a multivariable realization like GELISIMA which has been indicated in the latter part of Figure 4.1. Through the use of pattern recognition techniques, tests can be made for properties of the proposed measurements (cf. Chapter III). Once a sufficient knowledge of these properties is obtained, it would be possible to ascertain the worth of other analyses. The remainder of this chapter is the consideration of the adaptive pattern recognition procedure.

As pointed out by Rosen (83), no general method exists for the selection of an appropriate measurement. The idea is to select distinguishing features and represent them in terms of real numbers, of which each set forms a pattern. A categorizer is then used to classify each pattern, according to the initially desired information. In this case, each categorizer is to sequentially form a coded version of each dependent variable in terms of a prescribed subset of the other variables. This is done in an effort to determine interrelations which could simplify the analysis. The direct effect is to ask for a decision structure based on linear approximations which duplicates the terminal behavior of the original observer. In other words, the pattern categorizer is an equivalence-class decision structure which is used to determine if the remaining variables are sufficient to realize a given output.

GELISIMA: A New Pattern Categorizer for Simulation of the Robbers Cave Experiment

In order to gain the advantages of pattern recognition while restricting the receptor output (cf. Figure 3.1) to be used as shown in Figure 4.1, a different type of adaptive structure has been developed. Most of the technical details of the computer program used in this procedure appear in Appendix B. This computational process is denoted GELISIMA for association with a generalized linear-element simulation machine. If the reader will kindly recall the adaline and madaline structures of Figure 2.7, an explanation of the GELISIMA categorizer is presented next, followed by a consideration of the training procedure.

The organizational aspects of the GELISIMA configuration are shown in Figure 4.2. Each rectangular terminal set off by an M represents a madaline component which in turn contributes a coordinate of a binary code vector, u. The scalar products, $\langle u, v_j \rangle$, where $j = 1, 2, \ldots, k$, are then used to determine the level (quantization value) of the original coordinate according to

$$\bar{x}^d = \left\{ x_j^d : \langle u, v_j \rangle \geq \langle u, v_n \rangle , n = 1, 2, \ldots, k \right\} \tag{4.1}$$

where, in this case, d ranges the index of dependent variables. The use of output coding types these categorizers as matched-filter logic devices; however, the previously mentioned restrictions concerning the measures used require special considerations.

In the vector u, the ith coordinate is u^i, and it is an element of the binary set $Q_i = \{-1, 1\}$. The set of all u vectors for any particular dependent variable is formed as the cartesian product $U(k) = Q_1 Q_2 \ldots Q_k = Q^k$. The number of elements of U(k) is clearly dependent

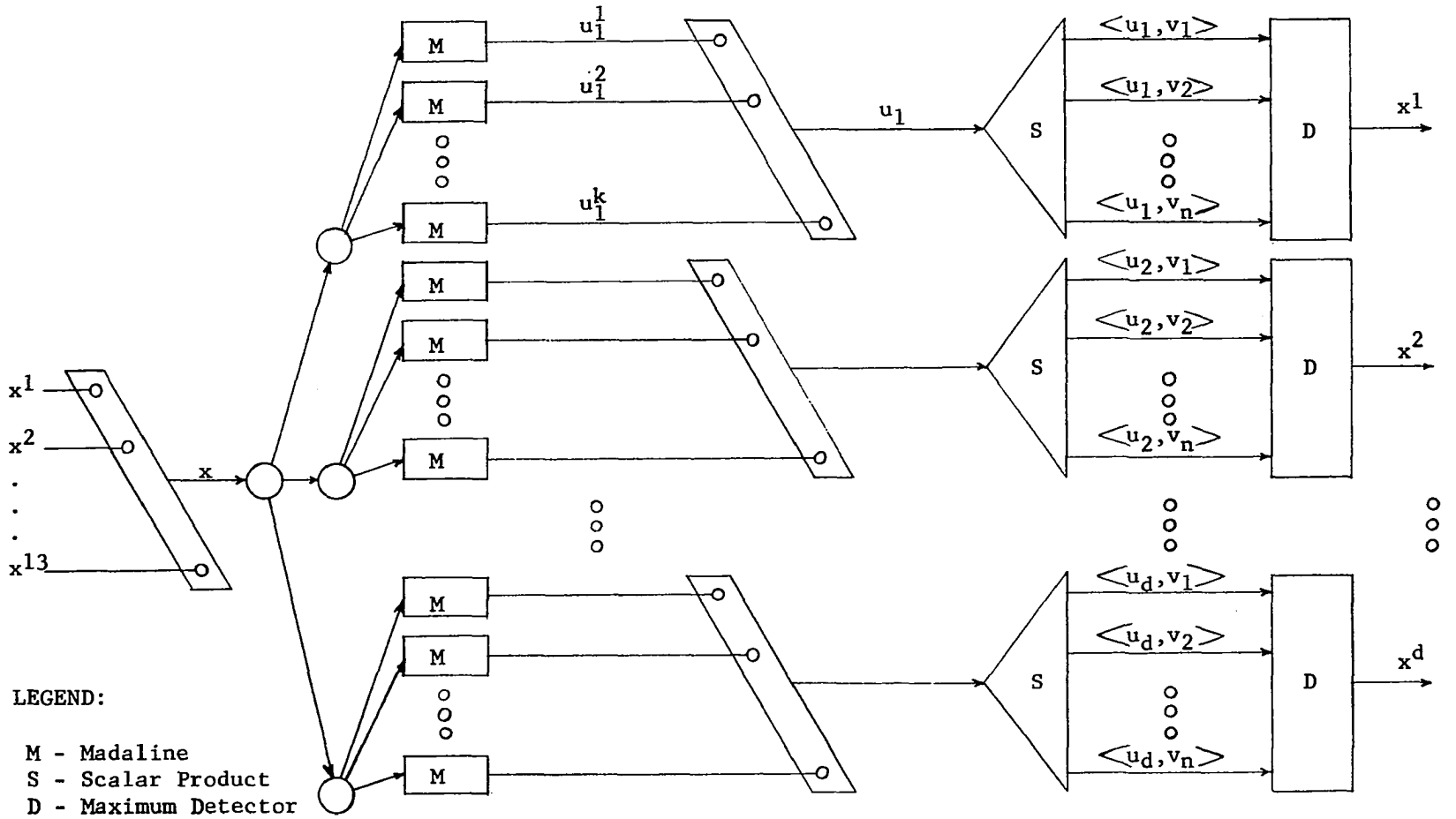

Figure 4.2. Organization of GELISIMA Structure

on the number of coordinates k as 2^k. The principal convenience is reflected by considering the scalar product of two elements, u and v, of U(k) as a projection. For k fixed as a positive integer, the inequality $-k \leq \langle u, v \rangle \leq k$ holds for all elements of U(k). The extremes are unique in that $\langle u, v \rangle = k$ implies that u = v and -k is for v equal to the negative of u, v = -u. The elements of U(k) may also be viewed as vertices of a k-dimensional hypercube. In this context, each edge is two units which is the smallest distance between two points of U(k).

In pattern recognition as well as general coding applications, the allowable size of k is important. For instance, to encode the set $\{1, 2, 3\}$ the value of k must be ≥ 2 and there is no unique k = 2 encoding. Thus, a binary coded decimal (BCD) correspondence with k = 2 would be

$$v_1^t = -1\ 1 \quad v_2^t = 1\ -1 \quad v_3^t = 1\ 1 \tag{4.2}$$

These were obtained from the conventional form by replacing 0 with -1. There are at least two reasons to consider this a poor representation. First, the metric properties associated with the original set are not preserved since there are single edges from v_3 to both v_1 and v_2. Secondly, any single coordinate error resulting in points of the object code set, $V = \{v_1, v_2, v_3\}$, will be incorrectly interpreted. Furthermore, a single coordinate error could occur as $u_0^t = -1\text{-}1$ which on the basis of distance might be interpreted as either v_1 or v_2.

The continuation then is to gradually allow k to increase while pursuing a code which correctly associates relative distances between code words with the original symbols and, also, possesses

reasonable error correcting properties. A distance preserving encoding could be the three level code:

$$v_1^t = -1\text{-}1\ 1 \quad v_2^t = -1\ 1\ 1 \quad v_3^t = 1\ 1\ 1 \tag{4.3}$$

whereby the set V is contained in $U = Q^3$. The relative distances are easily stated in terms of edges, or number of coordinates in disagreement, and are presented as a matrix in expression (4.4) below. Each element of the array, therefore, relates a measure of edges between its entries.

	v_1	v_2	v_3
v_1	0	1	2
v_2	1	0	1
v_3	2	1	0

(4.4)

A relation for determining the components of the ith code word, $v_i^t = (v_i^1, v_i^2, \ldots, v_i^j, \ldots, v_i^L)$, with L the number of levels is

$$v_i^j = \begin{cases} 1, & L\text{-}j < i \leq L \\ -1, & 0 \leq i \leq L\text{-}j \end{cases} \quad \text{where both } i, j = 1, 2, \ldots, L \tag{4.5}$$

The single-error correcting properties of the code in expression (4.3) are reasonable but not complete since u = 1-1 1 could be either v_1 or v_3.

Once again, the quest is for an L-level code with an order-property and some error-correction. In order to avoid the indecision of (4.2) et seq. where a point was equidistant to two code words, the difference between object code elements should be an odd number. A reasonable choice has proved to be twice the correction plus one. Thus, the distance between adjacent elements of the code, denoted x, with double error-correction is five. Ordering implies the ability to sequen-

tially arrange other elements with respect to a given one. The code words are now x edges apart from adjacent or first-neighbor elements and an increasing multiple of y from increasingly distant elements. Thus, two elements which are, say, third-neighbors differ by x + 2y edges or digits. The fact that y does not necessarily equal x often affords a more convenient word length.

Examples of object codes which satisfy the properties discussed are presented in Table 4.1. To form such an L level x + y binary code with $x \geq y$ and x + y even, use the following definitions and algorithms:

x is the number of digits (edges) by which vectors (code elements) for adjacent levels (first-neighbors) differ

x + y is the number of digits by which vectors for a two level (second-neighbors) separation differ

x + 2y is the number of digits by which vectors for a three level (third-neighbors) separation differ

x + (L - 2)y is the largest number of digits by which vectors in the code may differ.

Using a post-superscript t for transpose, elements of V are:

v_1^t = a k-tuple of $\left[x + (L - 2)\left(\frac{x + y}{2}\right)\right]$ 1s,

v_2^t = (x) -1s, followed by (k - x) 1s,

$v_3^t = \left[x - \left(\frac{x - y}{2}\right)\right]$ -1s, followed by $\left(\frac{x - y}{2}\right)$ 1s,

followed by $\left(\frac{x + y}{2}\right)$ -1s, followed by $\left[k - \left(\frac{3x + y}{2}\right)\right]$ 1s,

.
.
.

$v_j^t = \left[x - \left(\frac{x - y}{2}\right)\right]$ -1s, followed by $\left(\frac{x - y}{2}\right)$ 1s, followed by

Table 4.1. Binary Output Codes
[by permission of F. J. Kern (53)]

Type	Levels	Vector	Code
3 + 1	3	v_1^t	1 1 1 1 1
		v_2^t	-1-1-1 1 1
		v_3^t	-1-1 1-1-1
3 + 1	5	v_1^t	1 1 1 1 1 1 1 1 1
		v_2^t	-1-1-1 1 1 1 1 1 1
		v_3^t	-1-1 1-1-1 1 1 1 1
		v_4^t	-1-1 1-1 1-1-1 1 1
		v_5^t	-1-1 1-1 1-1 1-1-1
5 + 1	3	v_1^t	1 1 1 1 1 1 1 1
		v_2^t	-1-1-1-1-1 1 1 1
		v_3^t	-1-1-1 1 1-1-1-1
5 + 1	5	v_1^t	1 1 1 1 1 1 1 1 1 1 1 1 1 1
		v_2^t	-1-1-1-1-1 1 1 1 1 1 1 1 1 1
		v_3^t	-1-1-1 1 1-1-1-1 1 1 1 1 1 1
		v_4^t	-1-1-1 1 1-1 1 1-1-1-1 1 1 1
		v_5^t	-1-1-1 1 1-1 1 1-1 1 1-1-1-1
5 + 3	3	v_1^t	1 1 1 1 1 1 1 1 1
		v_2^t	-1-1-1-1-1 1 1 1 1
		v_3^t	-1-1-1-1 1-1-1-1-1
5 + 3	4	v_1^t	1 1 1 1 1 1 1 1 1 1 1 1 1
		v_2^t	-1-1-1-1-1 1 1 1 1 1 1 1 1
		v_3^t	-1-1-1-1 1-1-1-1-1 1 1 1 1
		v_4^t	-1-1-1-1 1-1-1-1 1-1-1-1-1
5 + 3	5	v_1^t	1 1 1 1 1 1 1 1 1 1 1 1 1 1 1 1 1
		v_2^t	-1-1-1-1-1 1 1 1 1 1 1 1 1 1 1 1
		v_3^t	-1-1-1-1 1-1-1-1-1 1 1 1 1 1 1 1 1
		v_4^t	-1-1-1-1 1-1-1-1 1-1-1-1-1 1 1 1 1
		v_5^t	-1-1-1-1 1-1-1-1 1-1-1-1 1-1-1-1-1

(j - 3) repetitions of the sequence

$\left\{(y)\ -1s, \text{ followed by } \left(\frac{x - y}{2}\right) +1s\right\}$, followed by $\left(\frac{x + y}{2}\right)$ -1s,

followed by $\left[k - \left(\frac{3x + y}{2}\right) - (j - 3)\left(\frac{x + y}{2}\right)\right]$ 1s for

$j = 4, 5, \ldots, L.$

Careful consideration shows that adjacent vectors differ by $\frac{x + y}{2} - y + \frac{x + y}{2} = x$ digits, and that the jth vector differs from the ith vector by $\left(\frac{x + y}{2}\right) - (i - j + 1)y + \left(\frac{x + y}{2}\right) = x + (i - j)y$ digits for $i>j>3$. Also, comparisons of v_1 to v_2, v_2 to v_3, and v_1 to v_3 indicate differences of x, x, and x + y digits, respectively.

Now it is possible to point out that the dependent coordinates x^1, x^2, x^3, and x^4 may be encoded according to 3, 3, 5, and 5 level codes, respectively, of Table 4.1. This is necessary in order to incorporate the madaline components of Figure 4.2 whose outputs are binary. The length of code used for each dependent variable dictates the number of madaline components for that variable. For example, the variable for group structure x^1, is given a 5 + 3 encoding for three levels which results in a code of $k = 5 + (3 - 2)\left(\frac{5 + 3}{2}\right) = 9$ dimensions. This then requires a nine madaline configuration; each madaline producing a single binary component of the transposed vector $u^t = (u^1, u^2, \ldots, u^9)$.

As in Figure 2.7b, the input portion of each madaline is an array of adalines. These form decision hyperplanes in the space of input variables in an effort to satisfy the demands of the output code. The parallel banks of adalines which form each madaline are connected through a boolean OR function on the adaline outputs q_i^j. In

connection with the output codes, the j of q_i^j identifies the object code coordinate to be formed and the i indicates the different adalines used to form the decision surface. Each such adaline output is an element of the set (-1, 1). It is, therefore, necessary to associate these with the boolean operational elements (∅, 1) and for the purposes herein, -1 corresponds to ∅. A further convenience is now introduced for the OR function as simply the maximum over a set of plus and minus ones.

An important aspect of the GELISIMA is that each madaline is to be minimized as to the number of adalines required to correctly reproduce the training set. The fewer the number of adalines per madaline, the simpler the actual decision surface would be. The best situation results for single adalines since this implies that the training set is linearly separable with respect to the output code segment [cf. Efron (24) or Novikoff (75)]. For a hypothetical instance, consider the classification of the elements shown in Figure 4.3. It is assumed that each one may be located in terms of coordinates $\bar{x}1$, $\bar{x}2$.

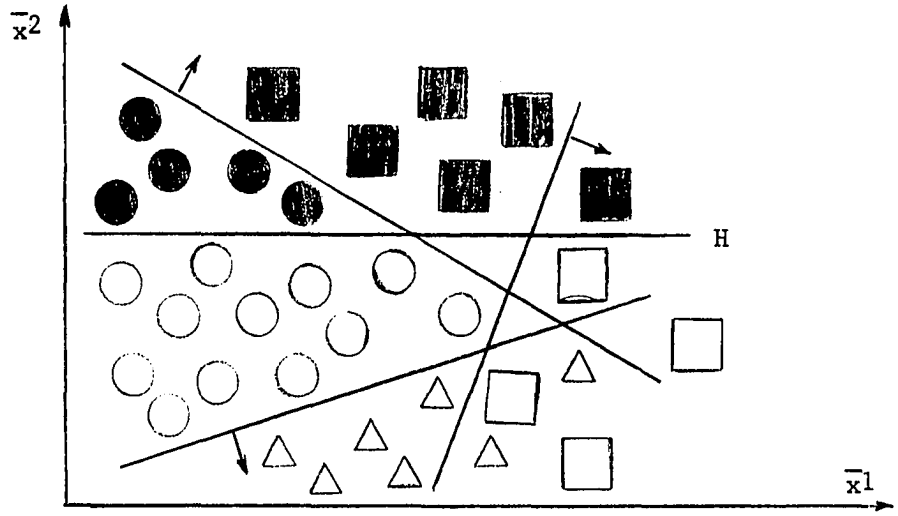

Figure 4.3. Sample Elements for Classification

If the elements are to be dichotomized as black or white, then the single horizontal line H would form a decision plane, i.e., black and white are linearly separable. If, however, the requirement is to classify elements as to smooth boundaries or with corners, the procedure is somewhat more involved. The key is that the former occur within a convex hull with respect to others. A single madaline with three adalines having the normal directions shown is sufficient. The reader should note that the errorless classification of triangles from all others is not possible with madalines since triangles are not convex in the given coordinates [cf. Duda, et al (23)].

It is clear that a madaline has some advantage over simple adaline configurations, namely, those classifications that are linearly separable, i.e., where patterns form sets with convex hulls which are pairwise disjoint, evolve as simple adalines. Also, those classifications that would require decision surfaces of higher degree may be approximated if the selected encoding delineates one pattern subset as convex with respect to the others. Thus, if a linearly separable situation exists, the madaline dichotomy is symmetric; otherwise, those patterns associated by the OR function as -1 (boolean $\emptyset$) are considered to be within a convex hull and separating hyperplanes are determined based on the training set.

The next consideration is the individual adalines and the adaptive training procedure. Each of the madalines for a particular dependent variable is adapted to reproduce one component, say u^j, of the object code. The training set is a fixed sequence of m patterns, expressed by the matrix

$$X = (x_1, x_2, \ldots, x_m) \tag{4.6}$$

Upon encoding of the dependent coordinate, there results a binary sequence, expressed as a transposed vector,

$$d^{jt} = (d_1^j, d_2^j, \ldots, d_m^j) \tag{4.7}$$

which represent known values of u^j. That is, for the ith pattern $u^j = d_i^j$, the vector d^j is to be duplicated by the jth madaline for corresponding input patterns.

As previously indicated, each madaline is initially a single adaline. The adaline element forms a scalar product

$$s_1^j = \langle x, w^j \rangle = \sum_{r=0}^{n} x^r w_r^j \tag{4.8}$$

for each input pattern, as shown in Figure 2.7a. The weight vector, w^j, gives the orientation of the decision hyperplane as the multipliers of the pattern components x^r for $1 \leq r \leq n$, and the distance from the origin is proportional to the coefficient of the umbral dimension $x^0 = 1$ [cf. Nilsson (74)].

The sum, s_1^j, is then quantified according to the two-level signum function to form the adaline output,

$$q_1^j = \operatorname{sgn}(s_1^j) = \begin{cases} 1, & s_1^j \geq 0 \\ -1, & s_1^j < 0 \end{cases} \tag{4.9}$$

In general, the OR gate which is characteristic of a madaline then forms the coordinate,

$$u^j = \max \left\{ q_p^j : \; p = 1, 2, \ldots, p_j \right\} \tag{4.10}$$

which relates p_j as the least number of adalines that can produce the jth object code coordinate for the training set. In the case of linear separability, the maximum of expression (4.10) becomes

$$u^j = q_1^j = \operatorname{sgn}(s_1^j) \tag{4.11}$$

This is the result of determining the n + 1 vector w^j such that

$$d^j = \text{sgn}\ (X^t w^j) \tag{4.12}$$

is a valid equation for the m patterns of the training set (4.6).

In order to efficiently present the technique used to determine weight vectors, another adaline is shown in Figure 4.4. More detail is given here to the error detection portion of the adaptive training apparatus in Figure 2.7a. The patterns of expression (4.6)

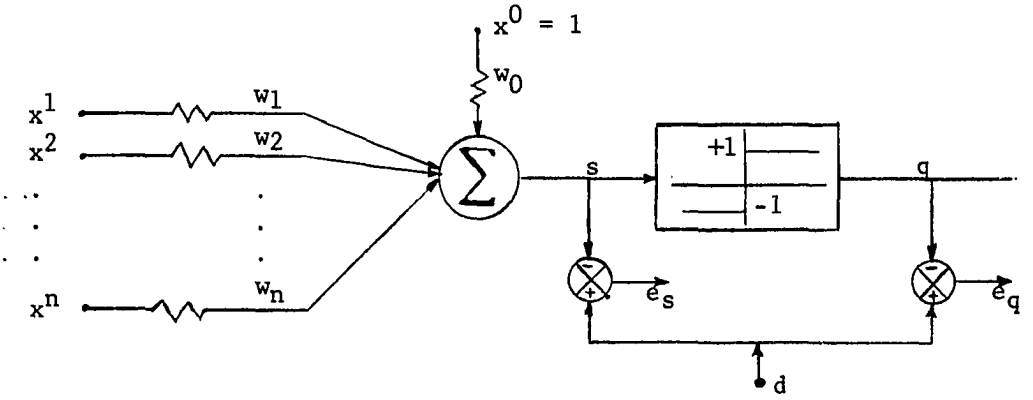

Figure 4.4. Adaline with Error Detection

are applied in the sequence given by the training set along with the corresponding desired outputs, d_i, from (4.7) for i = 1, 2, ..., m. Two errors are generated. One is the actual adaline quantized error,

$$e_{qi} = d_i - q_i \tag{4.13}$$

which is one of the three values (2, 0, -2). The other is

$$e_{si} = d_i - s_i \tag{4.14}$$

which differs from e_{qi} according to expression (4.9) above.

The motivation for the definition of an alternate error function is an effort to avoid direct usage of expression (4.9) which is nonlinear. The definition of e_{si} is much more appealing since it is analytic; however, momentary consideration must be given to their interdependence. Others introduce the notions of square errors at this point

and take an average for each type of error over the pattern set as

$$\bar{e}_q^2 = \frac{1}{m} \sum_{i=1}^{m} (e_{qi})^2 \tag{4.15a}$$

and

$$\bar{e}_s^2 = \frac{1}{m} \sum_{i=1}^{m} (e_{si})^2 \tag{4.15b}$$

which is certainly all right. However, the implications that $\bar{e}_q^2$ is a monotone function of $\bar{e}_s^2$ and, thereby, allows the assumption of statistical distributions in the stated form is an overindulgence. This contention is easily demonstrated by considering the four possibilities (d, q) = ($\pm$1, $\pm$1) of (4.13) in conjunction with the two functions of s determined by (4.14) for d = +1, -1. The results are given below in Figure 4.5 as the cartesian product of e_{si} and e_{qi} which is double valued for $|e_{si}| > 1$. It is possible to compare these values for sufficiently small intervals about the origin. That is to say, for a given pattern of the training set if $|e_{si}| < 1$, then $e_{qi} = 0$ and the pattern classifies correctly.

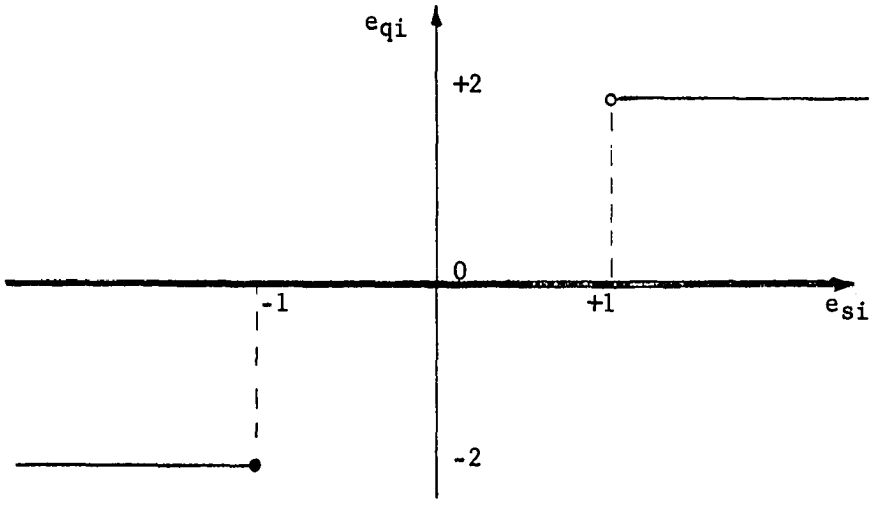

Figure 4.5. Multivalued Relation between Adaline Errors

The minimization of expression (4.15b) does not guarantee there will be no errors for the training set. It does determine a

best approximate solution of the system of equations,

$$X^t w = d \tag{4.16}$$

for those d vectors outside the range of the linear transformation associated with X^t. For those within the range, such minimization leads to the set of solutions (possibly singular). For a more comprehensive treatment of transformations, the reader should consult one of the standard texts such as Zadeh and Desoer (117) or Cheney (14).

Now it is possible to computationally construct the weight vector, w, using the minimization of the mean square error given by expression (4.15b) which now is seen to be a positive real function of vectors d and s. Furthermore, decision surfaces of higher than first degree may be approximated through adaptation of the object code with respect to convex pattern subsets in the sense of (4.10).

A description of the incremental determination of the least mean-square-error follows. Each of the pattern errors, e_{si}, is squared and added to all other such errors for the training set. For the moment, this is represented as

$$y = \frac{1}{m} \sum_{i=1}^{m} (e_i)^2 \tag{4.17}$$

For fixed m, y may be considered a surface in the coordinates of w and the directional derivatives

$$y_{wj} = \frac{\partial y}{\partial w_j} \qquad j = 0, 1, 2, \ldots, n \tag{4.18}$$

form the components of its gradient. Now it is desired to increment w along this directional derivative or gradient which is denoted

$$\text{grad } (y) = \left(\frac{\partial y}{\partial w0}, \frac{\partial y}{\partial w1}, \frac{\partial y}{\partial w2}, \cdots, \frac{\partial y}{\partial w_n}\right)^t.$$

It is not contended that this will intersect an extremal point, w*, which furnishes a minimum for the squared error. Incrementing

along the gradient is, however, the best local strategy for the change in squared error per unit of distance in the (n + 1)-tuple of w(weight-space). The determination of how much to translate along the gradient is the principal advantage of this approach. Other techniques, such as incremental error-correction as described by Nilsson (74), require a determination of those patterns which contribute the largest error, plus an assumed correction coefficient which is usually based on experience. These may contribute to an unnecessary extension of computation time.

For a given initial value of the weight vector, say $w = w_0$, the gradient of y is taken and evaluated as grad $(y)_0$. Now in order to determine the best increment an adaptation gain is defined as g and is incorporated as the variable of the single variable function

$$y(g) = \frac{1}{m}\sum_{i=1}^{m}\left[d_i - \sum_{r=0}^{n} x_i^r\left(w_{r0} + g\frac{\partial y}{\partial w_r}\Big|_{w_0}\right)\right]^2 \tag{4.19}$$

Each term of this last expression that corresponds to a pattern error is in the form of a parabola such as

$$y_i(g) = a_i(g - b_i)^2 + c_i \tag{4.20}$$

and the sum of these terms may be reformed as

$$y(g) = A(g - B)^2 + C \tag{4.21}$$

which is again parabolic in g. That equation (4.21) achieves its minimum for $g^* = B$ is clear by inspection; however, it is computationally expedient to consider the derivatives. The necessary condition of a critical or stationary point gives

$$\frac{dy}{dg} = 2A(g - B) = 0 \tag{4.22}$$

from which $g^* = B$, and the guarantee of a minimum insures that

$$\frac{d^2y}{dg^2} = 2A \tag{4.23}$$

is positive. From the first relation of (4.22) and from (4.23) the value of the adaptation gain may be solved for as

$$g^* = B = - \frac{\left.\frac{dy}{dg}\right|_{g = 0}}{\left.\frac{d^2y}{dg^2}\right|_{g = 0}} \tag{4.24}$$

The principal convenience of this result is that the evaluations of first and second derivatives in the neighborhood of g = 0 can use several of the calculations previously needed to determine the directional derivatives.

Once the value of g* is found with respect to a given initial value, a new weight vector is determined as

$$w_1 = w_0 + g^* \, \text{grad}(y)_0 \tag{4.25}$$

Each such iteration brings the weight vector to the exact minimum of the parabola determined by the gradient of y. The minimum so obtained is then the starting point for the next iteration. This computational procedure is continued until there is either no change in the value of y or no change in w, i.e., g* = 0. The adaline is then tested on the training set with the newly determined weights.

If the training set is correctly transformed by the weight vector into the space associated with the object code coordinate, then the inputs are linearly separable. If the test of the training set elicits one or more errors, then more than one adaline is to be incorporated into the madaline with the relationship of expression (4.10) as the objective. As previously indicated, this is accomplished by relaxing the restriction that patterns with +1 images are convex and leaving the assumption concerning those with -1 images.

In this latter case of a linearly inseparable training set, the first adaline is retrained with an adjusted object code. This change in the d-vector is done in such a manner that all -1s are preserved for all adalines. Those +1s correctly classified remain for the moment in the new first adaline while those +1s classified as -1 are replaced with zeros (0). The adaline is now retrained until it correctly classifies all -1s and 1s, ignoring 0s. Once trained, the object code is again changed to the extent that the 0s become +1s and +1s are now 0s. The next adaline is now introduced and trained, based on uniformly prescribed initial values for all, and the similar restriction of correct -1s is observed.

This procedure is repeated by introducing new adalines until the training set is correctly classified for the madaline. In the event the patterns are still inseparable, it is submitted that the input space has insufficient dimensionality to form the desired relationship. This, too, can possibly be remedied by an extension to consideration of more variables.

In summary, a binary object code coordinate, u^i, is to be formed as dependent on other variables with the use of hyperplanes in the space of the n original variables. In doing this, it is convenient to extend the space with the threshold coordinate, $x^0 = 1$. The hyperplane components and distance along the normal result from adaptively determining the least mean square error over the training set. This latter set has been assumed valid and is denoted $u^i = d$ as a vector over the elements of the training set. It happens that herein the training set has been taken as all the event sequence abstracted from the experiment.

This tacitly dictates a premise of an event-independent correspondence which is analogous to time-invariance in linear systems.

The GELISIMA is adaptive in that if code components are linearly inseparable over the training set, then -1s are assumed convex with respect to +1s and the least number of separating hyperplanes is sought. A formal expression for one of the coordinates of the object code vector of k components which is produced by GELISIMA is

$$u^i = \underset{1 \leq j_i \leq J_i}{\text{Max}} \left[\text{Sgn}(x^t W)\right] \quad \text{where } i = 1, 2, \ldots, k \tag{4.26}$$

In this expression, k has been determined by the object code. The J_i represent the number of adalines for the ith madaline which are dependent on the training set. The weights have been represented by the matrix,

$$W = (w_{1_1} w_{2_1} \cdots w_{J_1}; w_{1_2} w_{2_2} \cdots w_{J_2}; \ldots; w_{1_k} w_{2_k} \cdots w_{J_k}) \tag{4.27}$$

wherein each element is a column vector of (n + 1) components.

Some comments are in order concerning the computational aspects of GELISIMA. Several options have been incorporated so the program could have general application and most of those concerning program specifications are described in Appendix B. Also, the GELISIMA program has been flow charted and is presented in the latter part of Appendix B.

One of the important features of GELISIMA concerns the adaptation philosophy. The gradient or surface searching techniques have been given ample consideration in the literature and occur in several of the previously given references [e.g., Duda, et al. (23)]. For some reason, the determination of how far to increment along the normal, i.e., the adaptation gain of expression (4.24), is not usually discussed. The adaptation gain is computationally efficient since small errors in the

calculation of derivatives do not accumulate. Only a few (10-15) iterations are normally required for a minimum with two to three significant digits. In developing the GELISIMA program, some innovations have been to enhance the convergence properties and incorporate some "fixed-increment correction" capabilities [Nilsson (74)].

The convergence is improved by allowing an option on the accuracy of derivatives. This is done by comparing the first order approximation for the first derivative,

$$f'(x) \doteq f_1'(x,h) = \frac{f(x + h) - f(x)}{h} \tag{4.28}$$

with the second order approximation

$$f'(x) \doteq f_2'(x,h) \doteq \frac{f(x + h) - f(x - h)}{2h} \tag{4.29}$$

in the calculation of the gradient components $\frac{\partial y}{\partial w_i}$ where $i = 0, 1, \ldots, n$.

Since the function y is the surface of mean-square-error, it is clear that if the relative error is less than 0.1, i.e.,

$$\left|f_2'(x,h) - f_1'(x,h)\right| \leq 0.1 \left|f_2'(x,h)\right| \tag{4.30}$$

then the minimum is not close at hand, and the first value of (4.29) can be used without decreasing h. Otherwise, the increment h is decreased until successive calculations of equation (4.29) make favorable comparisons. This procedure directs the computer to require greater accuracy in the neighborhood of the minimum; however, away from a minima, the set of terms $\{f(x + h), f(x), f(x - h)\}$ need to be determined for only one value of h and a considerable savings is obtained.

Another important attribute is the GELISIMA contains a fixed-increment rule for error-correction when a pattern(s) persists in classifying improperly at the computed minimum of the mean-square-error.

For the moment, the incorrectly classified pattern from the training set is denoted x_i. The desired output is then d_i^j for the jth madaline, and a new weight-vector is determined as

$$w_r' = w_r + \frac{d_i^j x_i^r \left| w_r \right|}{\sqrt{\langle x_i, x_i \rangle}\ \sqrt{\langle w, w \rangle}} \qquad \text{where } r = 0, 1, 2, \ldots, n. \tag{4.31}$$

This relationship affects an increment in the proper direction for correcting that error due to the ith pattern. There exist two program situations where applications of expression (4.31) are important. The first occurs when it is not possible for GELISIMA to verify an assumed convexity of patterns, i.e., if a minimum persists which indicates one or all of the +1s are interior to an assumed convex set of -1s, then GELISIMA will branch to use (4.31) as a check.

The second case of need for fixed increments occurs as a programming convenience. During the training of GELISIMA, it often happens that two consecutive object code coordinates (a k-tuple) are identical over the training set. That is, the vector equation

$$d^{j+1} = d^j \qquad \text{where } 1 \leq j \leq k \tag{4.32}$$

holds for one or more values of j. When this happens, GELISIMA will "remember" its preceding capability and continue training from there. Any improvement in capability is then incorporated in all madalines before the end of training. Under certain conditions, the training of a madaline can result in a pair of identical adalines. Since GELISIMA initiates the training of a new adaline only if errors exist and each adaline is of singular value to a madaline, this form of inefficient redundancy is avoided by using the fixed increment of equation (4.31).

Both of the usages discussed above are for special cases of

trouble in training set classifications after minimization of the mean-square-error and control is always returned to this latter type of training. Therefore, the logical hierarchy of GELISIMA structures incremental-error correction below that of least-mean-square-error. This is an effective, yet, straightforward combination of the two techniques. This result has not appeared previously and as a combined technique, GELISIMA has general utility in either linear or piecewise linear extents, provided the convexity requirements can be satisfied.

In those cases where the pattern regions associated with -1s are determined not to be convex, then some other alternatives exist. For the general applications problem, the data is termed "modal" with respect to the input space. These cases may be investigated, as pointed out by Chow (15) and Nilsson (74), by a consideration of other functions of the input vectors. That is, for the expression (3.1),

$$S = \left\{s:\ s = \langle f(x), w \rangle\right\} \tag{4.33}$$

the vector-function f could be extended to include practically any other functions. This has been termed "preprocessing" since the manipulation and decision processes have not changed but possibly the number of inputs have.

A second alternative is to attempt a reformulation of the input space. This could be achieved by increasing the dimensionality through the addition of another coordinate. This appears to be the most practical in those cases where moderate success has been attained in classifying the training set [cf. Akers (1)]. This alternative is also preferred over that of preprocessing in heuristic applications, since the associated scalar products of the above equation in the input space are

more easily understood.

Finally, momentary consideration can be given to variation of the object code. Kern (53) indicates very little "sensitivity" to coding for his investigation. Since the primary consideration here has been a different internal structure and training scheme, a variety of codes have not been tried. Another deterrent in this step is that for m patterns in the training set there are 2^m possible different training vectors for each madaline. Any computational considerations along this line is questionable since the number of patterns may be large; besides, a classification scheme has been sought which is independent of the number of patterns used in training. As previously mentioned, it would be of considerable interest to discover any associations between properties of the input patterns and any restrictions placed on the training vectors by the choice of an object code.

CHAPTER V

CONCLUSIONS AND RECOMMENDATIONS

The goal of erecting a completely quantitative theory of group behavior has not been achieved here. This alone, however, has not been the intention. Techniques of analysis which are incorporated at present under a general heading of simulation have elsewhere been directed toward schemes capable of reducing large quantities of data. Some of these problems involve transmission and manipulation of what is termed "hard" data and certainly are of interest; however, other, more recent inquiries have been concerned with determining and validating extracted parameters. These latter problems are denoted as pattern recognition and may or may not be well formulated with respect to interpretative conclusions. They are, therefore, specified as heuristic procedures.

For the Robbers Cave Experiment and other group observations, pattern recognition offers the possibility of simulation in terms of principles used in multivariable systems - a traditional concern of engineers. The relations between the groups and their environments have first been qualitatively described and then quantitatively abstracted in terms of inputs and outputs. The inputs are taken as the environmental influences on each group and the outputs a set of resultant influences

on the environment. That the input-output relations are situationally dependent is clear; an important question is to what extent can these relations be abstracted, i. e., be made not to depend directly on the event. In studies that are validly oriented toward manipulation of a single variable and that involve physical constraints (known relations concerning variables), such terminal relations can be deduced and the question can be answered without qualification. Fortunately, this is not the case with a multivariable approach especially in the present context where any explicit requirements of metrics or function classes have been avoided. Therefore, the present approach has been to train on binary object codes which preserve order and restrict the decision hyperplanes to the quantified dimensions.

Doubtless, the reader realizes that a "nickelodeon" type of realization is easily possible with the respective group data. That is to say, a program could be devised such that the correct outputs result for each input set by table look-up. The possibilities of generalization in such an approach are quite limited and have been eschewed. This is done by disallowing any input with explicit representation of observational ordering such as an event or phase coordinate. Under this restriction, the GELISIMA program is unable to realize, completely without error, the chosen outputs.

The inability to realize the associated outputs for all the training set suggests two important considerations which intuitively appear to be related. Only the first has been considered to any meaningful degree in this investigation. The first, is the concept discussed by Mesarovic (62) that in multivariable analysis the sets of

inputs and outputs are insufficient to completely specify a system's structure. The result being that classes of systems with equivalent structures are admitted until further, possibly implicit, specifications reduce the choices. The second consideration is that of revising the measurement scheme with respect to the numerical values of Table A-1. For instance, an improved GELISIMA performance with equal ratios (as opposed to the equal interval scales presented) would support the assertion by Stevens (104) that interrelations between behavioral indicants are power functions.

Both of the above considerations are concerned with fundamental adjustments of the abstraction process. An effective attribute of the GELISIMA programs is the relative ease with which such changes are accomplished. Hence, with the notion that the assumed formulations of Chapter III for the output variables could represent an unwarranted dilatation, a second formulation has been introduced according to the equations,

$$x^i = F_i(x^1, x^2, \ldots, x^{i-1}, x^{i+1}, \ldots, x^n) \qquad (5.1)$$

where $i = 1, 2, 3, 4$ for the outputs and $n = 13$ to encompass all quantified attributes (cf. Tables A-2 and A-3). This represents a conscious attempt to allow each output to be influenced by all other variables. The adoption of a set of equations wherein each output is considered a different function of only the inputs has often occurred, especially in the study of control problems. This, however, puts a constraint on the formulation which is invalid without an explicit assumption (or justification) to the effect that there does not exist any coupling between outputs [Mesarovic (62)]. Further realization of this is

asserted by the fact that virtually every single variable control problem is an abstraction of an actual multivariable system.

This extension in the determination of weights for the training sets of each group results in several alternatives for comparison. The data of Appendix A has been used in two levels of realization based on the two different assumptions concerning the influence of variables, i. e., the internally uncoupled relations of Chapter III and those of equation (5.1). The levels used refer to GELISIMA training based on assumptions first of linear separability and then extending to the first-layer combinations using the OR functions. Results of these efforts are summarized in Table 5.1 in terms of the number of correctly classified patterns from the forty-one element training set. These results show a worst case as thirty-five of forty-one correct patterns (85%) which happens to occur with the fewer inputs used in the Kern formulation of structure (x^1) of Table 3.1.

With respect to the classification records given in Table 5.1, it is clear that a somewhat better than chance ability to determine output variables has evolved with the GELISIMA. In general, the results for the linearly separable realizations were nearly complete. Also, a discernible improvement was obtained with the use of multiple adalines. The assumed linear separability was completely verified only for the 13-variable training of Eagle frustration (x^4). With this one exception, all of the outputs required the double error-correction property of the object code to attain the indicated training results.

Several interpretations concerning errors were related at the end of Chapter IV, and it is not unthinkable that some are attributable,

Table 5.1. Summary of Training Results

Output Variables	Number of Arguments	Groups: Rattlers (R) Eagles (E)	Number of Patterns Correctly Classified for 41 Element Training Set	
			Assuming Linear Separability	Allowing up to 9 Adalines per Madaline in GELISIMA
Structure	7	R	40	41
		E	35	35
	13	R	40	41
		E	36	36
Morale	7	R	39	39
		E	38	38
	13	R	39	39
		E	40	40
Attitude	7	R	38	36
		E	36	36
	13	R	39	38
		E	39	39
Frustration	6	R	39	41
		E	37	38
	13	R	39	40
		E	41	41

inherently, to the simulation scheme. On the other hand, the ability to relate so much information with relatively little error is encouraging. This is further evidenced by overall improvement in classification obtained from both the extension of equations (5.1) and the use of multiple decision hyperplanes (madalines). For example, over the forty-one events, the training results for Kern's formulation of Table 3.1 were 35, 38, 36, and 37, respectively, for the Eagle indicants of structure (x^1), morale (x^2), attitude (x^3), and frustration (x^4). The results obtained using coupled outputs and madalines were 36, 40, 39, and 41, indicating a worthwhile improvement in these outputs.

The ability to completely realize the outputs in the coupled formulation of equation (5.1), i. e.,

$$x^i = F_i(x^1, x^2, \ldots, x^{i-1}, x^{i+1}, \ldots, x^n),\ i = 1, \ldots, 4,$$

logically precludes a complete realization of a direct structural formulation similar to Kern (cf. Table 3.1). This is clarified by the fact that the latter may be obtained from equations (5.1) in GELISIMA by properly restricting the weights of coupled outputs to be zero. In contrapositive, the incorrectly classified patterns indicated in Table 5.1 for the coupled outputs of equations (5.1) limit the associated training results of the direct formulations proposed by Kern (53).

Although further improvement is certainly desirable, the present capability is considered good enough to generalize with comparable results. This could be verified with two interdisciplinary studies, the first of which could be reasonably undertaken in terms of cost. That is, the possibility exists that the GELISIMA, or some im-

proved modification thereof, is simulating the content analysis in some manner that contradicts the experimental events. That the present content analysis is reasonable could be verified by redoing the analysis several times using different individuals. This, again, is a recommendation to determine the core of analysis. The present recommendation, however, is not an open-ended one since the GELISIMA program could be used to process the results. It is recommended, however, that in such a study some analyses be performed without the use of numeric symbols to ascertain any selectivity.

Favorable results in such an effort would then lead to a second study in which a "closed loop" type of computer experiment is undertaken with similar groups. This would entail partial control of the experiment by on-line computation of event conditions which could be used to test hypotheses concerning changes of group influences on an environment. The scope of both of these suggested extensions is such that grants or funded sponsorship is necessary.

Finally, it is in order to summarize what has been accomplished. An analysis of social-psychological observations has been carried out on the Robbers Cave Experiment. This has been done according to the principles and empirical hypotheses expressed in the original report of M. Sherif et al. (93) and is presented in Appendix A. The GELISIMA program was then developed in this study as a general self-adaptive device to aid in the simulation of observations without any preprocessing of the information received. This is presented in Appendix B. The computed results for realizing the outputs are too numerous to warrant reproduction. A summary of the training results has, therefore,

been presented in Table 5.1.

In order to indicate their form, a sample listing of weights is presented in Appendix C. They happen to be for Rattler outputs according to equations (5.1). These are preceded in Appendix C by graphs which attempt to indicate for each of the outputs its dependence on other variables through comparison of the weight magnitudes. These values were determined by taking an average for each madaline of the adalines which had been properly normalized [cf. Nilsson (74)]. A second average was then taken over all madalines associated with an output. Because of this double-averaging, the results should, therefore, be considered only as coarse estimates of an over-all dependence. Nevertheless, these magnitudes could be used to help formulate hypotheses. For example, both formulations for Eagle structure (x^1) indicate a strong reliance on their previous levels of frustration (x^{10}) and structure (x^{11}). The Rattler structure (x^1) depends somewhat more on the formulation used. In a more consistent manner, all the formulations of morale (x^2) seem to depend to some extent more on presence (x^8) than any other.

BIBLIOGRAPHY

1. Akers, S. B. and B. H. Rutter. "The Use of Threshold Logic in Character Recognition," Proceedings of the IEEE, Vol. 52, No. 8, August, 1964.

2. Arbib, M. A. Brains, Machines, and Mathematics. New York: McGraw-Hill, Inc., 1964.

3. Ashby, W. R. Design for a Brain. New York: John Wiley and Sons, Inc., 1960.

4. Atyenbeck, C. R. and D. Hampel. "Neural, Threshold, Majority, and Boolean Logic Techniques," Technical Report on Life Sciences. Camden, New Jersey: Radio Corporation of America, 1965.

5. Bellman, R. "Dynamic Programming, Learning, and Adaptive Processes," Memorandum RM-3777-PR. Santa Monica, California: The Rand Corporation, September, 1964.

6. Bellman, R., R. Kalaba, and L. Zadeh. "Abstraction and Pattern Classification," Journal of Mathematical Analysis and Applications, Vol. 13, No. 1, January, 1966.

7. Berrien, F. K. and B. P. Indik. "The Study of Organizational and Relevant Small Group and Individual Dimensions," Technical Report 13. Washington, D. C.: Office of Naval Research Contract Nonr-404(10), Department of Defense, AD 430511, December, 1963.

8. Biser, E. "Modal and Many-Valued Logics," USAELRDL Technical Report 2435. Fort Monmouth, N. J.: United States Army Electronic Research and Development Laboratories, AD 437998, February, 1964.

9. Blomgren, G. H., and H. C. Torng. "Single Threshold Device Realization," Journal of the Franklin Institute, Vol. 281, No. 2, February, 1966.

10. Brain, A. E., et al. "Graphical Data Processing Research Study and Experimental Investigation," Reports 7, 8, 9, and 13.

Prepared for U. S. Army Signal Research and Development Laboratory under Contract DA 36-039-SC-78343 and continuation. 1962 and 1963.

11. Brand, L. Advanced Calculus. New York: John Wiley and Sons, Inc., 1955.

12. Carnap, R. "Foundations of Logic and Mathematics," International Encyclopedia of Unified Science, Vol. 1, No. 3, 1939, pp. 1-70.

13. Caws, P. "Definition and Measurement in Physics," Measurement: Definitions and Theories. Edited by C. W. Churchman and P. Ratoosh. New York: John Wiley and Sons, Inc., 1959.

14. Cheney, E. W. Introduction to Approximation Theory. New York: McGraw-Hill, Inc., 1966.

15. Chow, C. K. "A Class of Nonlinear Recognition Procedures," IEEE Transactions on Systems Science and Cybernetics, Vol. SSC-2, No. 2, December, 1966.

16. Chow, C. K. and C. N. Liu, "An Approach to Structure Adaptation in Pattern Recognition," IEEE Transactions on Systems Science and Cybernetics, Vol. SSC-2, No. 2, December, 1966.

17. Coe, R. M. "Conflict, Interference and Aggression: Computer Simulation of a Social Process," Behavioral Science, Vol. 9, No. 2, April, 1964.

18. Coleman, J. S. "The Mathematical Study of Small Groups," Mathematical Thinking in the Measurement of Behavior. Edited by H. Solomon. Glencoe, Illinois: The Free Press of Glencoe, 1960, pp. 1-150.

19. Coleman, J. S. "Analysis of Social Structures and Simulation of Social Processes with Electronic Computers," Simulation in Social Science: Readings. Edited by H. Guetzkow. Englewood Cliffs, N. J.: Prentice-Hall, Inc., 1962, pp. 70-81.

20. Cover, T. M. "Classification and Generalization Capabilities of Linear Threshold Units," Rome Air Development Center Technical Documentary Report RADC-TDR-64-32, February, 1964.

21. Dawson, R. E. "Simulation in the Social Sciences," Simulation in Social Science: Readings. Edited by H. Guetzkow. Englewood Cliffs, N. J.: Prentice-Hall, Inc., 1962, pp. 1-15.

22. de Sola Pool, I. and R. Abelson. "The Simulmatics Project," Simulation in Social Science: Readings. Edited by H. Guetzkow. Englewood Cliffs, N. J.: Prentice-Hall, Inc., 1962, pp. 70-81.

23. Duda, R. O., J. W. Machanik, and R. C. Singleton. "Function Modeling Experiment," SRI Project 3605 Technical Report. Menlo Park, California: Stanford Research Institute, December, 1963, AD 427 018.

24. Efron, B. "The Perceptron Correction Procedure in Nonseparable Situations," Rome Air Development Center Technical Documentary Report RADC-TDR-63-533, February, 1964.

25. Farley, B. G. "Self-Organizing Models for Learned Perception," Self-Organizing Systems - 1959. Edited by M. C. Yovits and S. Cameron. New York: Pergamon Press, 1960, pp. 7-30.

26. Feibleman, J. "The Hypothesis of Esthetic Measure," Philosophy of Science, Vol. 12, No. 3, July, 1945, pp. 194-217.

27. Fiedler, F. E., et al. "Group and Organizational Factors Influencing Creativity," Annual Report October 1, 1962. Arlington, Virginia: Arlington Hall Station, ASTIA Document AD 291620.

28. Fisher, R. A. Contributions to Mathematical Statistics. New York: John Wiley and Sons, Inc., 1952.

29. Fix, E. and J. L. Hodges, Jr. "Discriminatory Analysis, Nonparametric Discrimination: Consistency Properties," Project 21-49-004, Report 4. Prepared at the University of California under Contract AF 41(128)-31, USAF School of Aviation Medicine, Randolph Field, Texas, February, 1951.

30. Formby, J. An Introduction to the Mathematical Formulation of Self-Organizing Systems. New York: D. Van Nostrand Company, Inc., 1965.

31. Fukunoga, K. and T. Ito. "Learning Effect in Self-Organizing Systems," Mitsubishi Denki Laboratory Reports, Vol. 6, No. 2, April, 1965.

32. Geisler, M. A. and A. S. Ginsburg. "Man-Machine Simulation Experience," Technical Report P-3214. Santa Monica, California: The Rand Corporation, August, 1965.

33. Gibb, J. R. "A Framework for Examining Change," Technical Report 9. Washington, D. C.: Office of Naval Research Contract Nonr-3088(00), National Training Laboratories, AD 282 646, November, 1961.

34. Gorginsky, H. L. "On the Design of Adaptive Systems," IRE Convention Record, Pt. 4, March, 1958, pp. 160-167.

35. Gose, E. E. "An Adaptive Network for Producing Real Functions of Binary Inputs," Information and Control, Vol. 8, 1965, pp. 111-123.

36. Green, B. F. "Computer Languages for Symbol Manipulations," IRE Transactions on Human Factors in Electronics, Vol. HFE-2, No. 1, March, 1961.

37. Grenberger, M. Computers and the World of the Future. Cambridge, Mass.: MIT Press, 1962.

38. Guetzkow, H. "A Use of Simulation in the Study of Inter-Nation Relations," Simulation in Social Science: Readings. Edited by H. Guetzkow. Englewood Cliffs, N. J.: Prentice-Hall, Inc., 1962, pp. 82-93.

39. Guetzkow, H. and B. Collins. A Social Psychology of Group Processes for Decision Making. New York: John Wiley and Sons, Inc., 1964.

40. Gullahorn, J. T., and J. E. Gullahorn. "A Computer Model of Elementary Social Behavior," Computers and Thought. Edited by E. A. Feigenbaum and J. Feldman. New York: McGraw-Hill, Inc., 1963.

41. Gullahorn, J. T. and J. E. Gullahorn. "A Computer Experiment in Elementary Social Behavior," IEEE Transactions on Systems Science and Cybernetics, Vol. SSC-1, No. 1, November, 1965.

42. Haring, D. R. "Multi-Threshold Elements" IEEE Transactions on Electronic Computers, Vol. 15, No. 1, January, 1966.

43. Helmer, O. "The Prospects of a Unified Theory of Organizations," Technical Report P-1053. Santa Monica, California: The Rand Corporation, April, 1957.

44. Helmer, O. "Social Technology," Technical Report P-3063. Santa Monica, California: The Rand Corporation, February, 1965.

45. Highleyman, W. H. "Linear Decision Functions with Application to Pattern Recognition," Proceedings IRE, Vol. 50, No. 6, June, 1962, pp. 1501-1514.

46. Homans, G. C. The Human Group. New York: Harcourt, Brace and Co., 1950.

47. Homans, G. C. Social Behavior: Its Elementary Forms. New York: Harcourt, Brace and Co., 1961.

48. Hovland, C. I. "Computer Simulation of Thinking," Simulation in Social Science: Readings. Edited by H. Guetzkow. Englewood Cliffs, N. J.: Prentice-Hall, Inc., 1962, pp. 16-28.

49. Hu, S. T. Threshold Logic. Berkely: University of California Press, 1965.

50. Kaszerman, D. "A 'Region' Concept and its Application to Threshold Logic," Information and Control, Vol. 8, No. 5, October, 1965, pp. 531-551.

51. Kaylor, D. J. "A Mathematical Model of a Two-Layer Network of Threshold Elements," Rome Air Development Center Technical Documentary Report RADC-TDR-63-534, March, 1964.

52. Kemeny, J. G., and J. L. Snell. Mathematical Models in the Social Sciences. Boston: Ginn and Company, 1962.

53. Kern, F. J. "An Application of Pattern Recognition Techniques to Social Systems Modeling," Doctoral Thesis at the University of Oklahoma, 1966.

54. Kimura, T. and T. Kuroda. "An Experiment on Compounding Recognition Systems," Mitsubishi Denki Laboratory Reports, Vol. 5, No. 3, July, 1964.

55. Knoop, D. E. and K. S. Fu. "An Adaptive Model of the Human Operator in a Control System," TR-EE64-15, Control and Systems Laboratory, School of Electrical Engineering, Purdue University, Lafayette, Indiana, 1964.

56. Langhaar, H. L. Dimensional Analysis and Theory of Models. New York: John Wiley and Sons, Inc., 1951.

57. Lewis, P. M. "The Characteristic Selection Problem in Recognition Systems," Transactions IRE on Information Theory, Vol. IT 8, No. 2, February, 1962, pp. 171-178.

58. Liu, C. L. and J. W. S. Liu. "On a Multiplexing Scheme for Threshold Logical Elements," Information and Control, Vol. 8, 1965, pp. 282-294.

59. McWhinney, W. H. "Simulating the Communication Network Experiments," Behavioral Science, Vol. 9, No. 1, January, 1964, pp. 80-84.

60. Marill, T. and D. M. Green. "On the Effectiveness of Receptors in Recognition Systems," Transactions IEEE on Information Theory, Vol. IT 9, No. 1, January, 1963, pp. 11-17.

61. Maron, M. E. "Cybernetics," Technical Report P-3144-1. Santa Monica, California: The Rand Corporation, December, 1965.

62. Mesarovic, M. D. The Control of Multivariable Systems. New York: The Technology Press of the Massachusetts Institute of Technology and John Wiley and Sons, Inc., 1960.

63. Miller, J. G. "Living Systems: Structure and Process," Behavioral Science, Vol. 10, No. 4, October, 1965.

64. Minsky, M. "A Selected Descriptor-Indexed Bibliography to the Literature on Artificial Intelligence," Computers and Thought. Edited by E. A. Feigenbaum and J. Feldman. New York: McGraw-Hill, Inc., 1963.

65. Minsky, M. "Steps Toward Artificial Intelligence," Computers and Thought. Edited by E. A. Feigenbaum and J. Feldman. New York: McGraw-Hill, Inc., 1963.

66. Moore, O. K. and M. I. Berkowitz. "Problem Solving and Social Interaction," Technical Report 1. New Haven, Conn.: Interaction Laboratory, Yale University, AD 118379, 1956.

67. Mosteller, F. and R. R. Bush. Stochastic Models for Learning. New York: John Wiley and Sons, Inc., 1955.

68. Murray, D. R., Jr. and R. D. Smallwood. Model Inference in Adaptive Pattern Recognition. Stanford, California: Institute in Engineering - Economic Systems, Stanford University.

69. Nash, L. K. The Nature of the Natural Sciences. Boston: Little, Brown and Company, 1963.

70. Naylor, T. H., J. L. Balintfy, D. S. Burdick, and K. Chu. Computer Simulation Techniques. New York: John Wiley and Sons, Inc., 1966.

71. Newell, A. "Limitations of the Current Stock of Ideas About Problem Solving," Technical Publication of the Systems and Communication Sciences Institute, Carnegie Institute of Technology, Pittsburg, Pennsylvania.

72. Newell, A. and G. Ernst. "The Search for Generality," Technical Publication of the Carnegie Institute of Technology, Pittsburg, Pennsylvania.

73. Newell, A. S. and H. A. Simon. "GPS, A Program that Simulates Human Thought," Computers and Thought. Edited by E. A. Feigenbaum and J. Feldman. New York: McGraw-Hill, Inc., 1963.

74. Nilsson, N. J. Learning Machines: Foundations of Trainable Pattern-Classifying Systems. New York: McGraw-Hill, Inc., 1965.

75. Novikoff, A. G. J. "On Convergence Proffs for Perceptrons," Stanford Research Institute Report. Prepared for the Office of Naval Research under Contract Nonr 3438(00). January, 1963.

76. Pask, G. "Interaction between a Group of Subjects and an Adaptive Automation to Produce a Self-Organizing System for Decision

Making," Self-Organizing Systems - 1962. Edited by M. Yovits, G. Jacobi, and G. Goldstein. Washington: Spartan Books, 1962.

77. Peterson, W. W. Error Correcting Codes. New York: Academic Press, Inc., 1959.

78. Pierce, W. H. "Interwoven Redundant Logic," Journal of the Franklin Institute, Vol. 277, No. 1, pp. 55-80.

79. Porter, W. A. Modern Foundations of Systems Engineering. New York: The Macmillan Co., 1966.

80. Reitman. "Programming Intelligent Problem Solvers," IRE Transactions on Human Factors in Electronics, Vol. HFE-2, No. 1, March, 1961.

81. Reza, F. M. An Introduction to Information Theory. New York: McGraw-Hill, Inc., 1961, P. 168.

82. Ridgway, W. C. "An Adaptive Logic System with Generalizing Properties," Stanford Electronics Laboratories Technical Report 1556-1. Prepared under Air Force Contract AF 33(616)-7726. Stanford, California: Stanford University, April, 1962.

83. Rosen, C. A. "Pattern Classification by Adaptive Machines," Science, Vol. 156, No. 3771, April 7, 1967, pp. 38-44.

84. Rosen, J. B. "Pattern Recognition by Convex Programming," Technical Report No. 30, Stanford University, June, 1963.

85. Rosenblatt, F. Principles of Neurodynamics. Washington, D. C.: Spartan Books, 1962.

86. Rosenblueth, A. and N. Wiener. "The Role of Models in Science," Philosophy of Science, Vol. XII, No. 4, October, 1945, pp. 316-321.

87. Schwartz, M. Information Transmission, Modulation, and Noise. New York: McGraw-Hill, Inc., 1959.

88. Sebestyen, G. "Pattern Recognition by an Adaptive Process of Sample Set Construction," Transactions IRE on Information Theory, Vol. 178, No. 5, September, 1962, pp. S82-S91.

89. Selfridge, O. G. and V. Neisser. "Pattern Recognition by Machine," Computers and Thought. Edited by E. A. Feigenbaum and J. Feldman. New York: McGraw-Hill, Inc., 1963.

90. Shannon, C. E. "Prediction and Entropy of Printed English," Bell Systems Technical Journal, Vol. 30, January, 1951, pp. 50-64.

91. Shepherd, C. R. Small Groups: Some Sociological Perspectives. San Francisco: Chandler Publishing Company, 1964.

92. Sherif, C. W., M. Sherif, and R. E. Nebergall. Attitude and Attitude Change. Philadelphia, Pa.: W. B. Aunders Co., 1965.

93. Sherif, M., O. J. Harvey, B. J. White, W. R. Hood, and C. W. Sherif. Intergroup Conflict and Cooperation, The Robbers Cave Experiment. The University of Oklahoma: Institute of Group Relations, 1961.

94. Simmons, P. L., and R. F. Simmons. "The Simulation of Cognitive Processes: An Annotated Bibliography," IRE Transactions on Electronic Computers, September, 1961.

95. Simon, H. A. "A Formal Theory of Interaction of Social Groups," American Sociological Review, Vol. 17, 1952, pp. 202-211.

96. Simon, H. A. "The Construction of Social Science Models," Mathematics and Psychology. Edited by G. A. Miller. New York: John Wiley and Sons, Inc., 1964, pp. 137-146.

97. Sklansky, J. "Adaptation Theory: A Tutorial Introduction to Current Research," Technical Report on Life Sciences. Camden, New Jersey: Radio Corporation of America, 1965.

98. Sklansky, J. "Learning Systems for Automatic Control," IEEE Transactions on Automatic Control, Vol. AC-11, No. 1, January, 1966.

99. Smith, G. L. "A Proposal to Determine the Usefulness to the Diagnosis and the Treatment of Cardiac Disorders of Correcting the Method of Measuring the Angular Value of the Mean Manifest Axis of the Heart through the Application of Electronic Instrumentation," Technical Memorandum, School of Electrical Engineering, University of Oklahoma, October, 1964.

100. Solomonoff, R. J. "Some Recent Work in Artificial Intelligence," Proceedings of the IEEE: Special Issue on Computers, Vol. 54, No. 12, December, 1966.

101. Specht, D. F. "Vectorcardiographic Diagnosis Utilizing Adaptive Pattern-Recognition Techniques" Technical Report Number 6763-1. Stanford: Systems Theory Laboratory, Stanford Electronics Laboratories, 1964.

102. Springer, C. E. Tensor and Vector Analysis: With Applications to Differential Geometry. New York: Ronald Press Company, 1962.

103. Stevens, S. S. Handbook of Experimental Psychology. New York: John Wiley and Sons, Inc., 1951.

104. Stevens, S. S. "Measurement, Psychophysics, and Utility," Measurement: Definitions and Theories. Edited by C. W. Churchman and P. Ratoosh. New York: John Wiley and Sons, Inc., 1959.

105. Uhr, L., and C. Vossler. "A Pattern-Recognition Program that Generates, Evaluates, and Adjusts its Own Operators," Computers and Thought. Edited by E. A. Feigenbaum and J. Feldman. New York: McGraw-Hill, Inc., 1963.

106. United States Senate's Committee on Foreign Relations. "Hearing on Psychological Aspects of International Relations," United States Senate Eighty-Ninth Congress Second Session Congressional Record May 25, 1966. J. W. Fulbright (D.-Ark.), Chairman. Washington, D. C.: U. S. Government Printing Office, 1966.

107. von der Groeben, J. "The Spatial Frequency Distribution of the QRS Loop as Studied on 154 Normal Individuals," American Heart Journal, Vol. 59, June, 1960, p. 875.

108. von Foerster, H. "On Self-Organizing Systems and Their Environments," Self-Organizing Systems - 1959. Edited by M. C. Yovits and S. Cameron. New York: Pergamon Press, 1960, pp. 31-50.

109. Walter, D. O. and W. R. Adey. "Linear and Nonlinear Mechanisms of Brain-Wave Generation," Advances in Biomedical Computer Applications, ANNALS OF THE NEW YORK ACADEMY OF SCIENCES, Vol. 128, Art. 3, January 31, 1966.

110. Weinberg, A. M. "Can Technology Replace Social Engineering?," The University of Chicago Magazine. Chicago, Illinois: The University of Chicago Alumni Association, October, 1966.

111. Widrow, B. "Generalization and Information Storage in Networks of Adaline 'Neurons'," Self-Organizing Systems - 1962. Edited by M. C. Yovits, G. T. Jacoby, and G. O. Goldstein. Washington, D. C.: Spartan Books, 1962, pp. 435-461.

112. Wiener, N. "Homeostasis in the Individual and Society." Journal of the Franklin Institute, Vol. 251, 1951, pp. 65-68.

113. Wooldridge, D. E. The Machinery of the Brain. New York: McGraw-Hill, Inc., 1963.

114. Yates, A. J. Frustration and Conflict. New York: John Wiley and Sons, Inc., 1962.

115. Yntema and Torgerson. "Man-Computer Cooperation in Decisions Requiring Common Sense," IRE Transactions on Human Factors in Electronics, Vol. HFE-2, No. 1, March, 1961

116. Youden, W. W. "Computer Literature Bibliography 1946-1963," Miscellaneous Publication 266, National Bureau of Standards, 1963.

117. Zadeh, L. A., and C. A. Desoer. Linear System Theory: The State Space Approach. New York: McGraw-Hill, Inc., 1963.

118. Ziller, R. T. "The Newcomer's Acceptance in Open and Closed Groups," Personnel Administration, Vol. 25, No. 5, September-October, 1962.

APPENDICES

APPENDIX A

CONTENT ANALYSIS OF THE ROBBERS CAVE EXPERIMENT

The information herein is used to abstract the content of Sherif's et al. (93) Robbers Cave Experiment into a sequence of events. Each is relevant according to the principles and empirical hypotheses expressed by the experimenters (cf. Chapter III) and has been quantized using the correspondences given in Table A-1. The results are given in Table A-2 for the Rattlers (R) and Table A-3 for the Eagles (E).

The reader will please note that each quantized event (pattern) contains thirteen components; the first nine components are the four dependent and five independent variables, respectively, discussed in Chapter III. The next four were added by Kern (53) to impart some of the continuity and dependence on past events that is apparent and was discussed in detail in the experiment. Those added by considerations of dependence on past events are:

Previous Frustration (x^{10}): the value of the frustration level for the last event,

Average Attitude (x^{11}): the value most closely associated to the average value of attitude level for the last three events with equal consideration given to each one,

Average Morale (x^{12}): the value most closely associated to the

average value of morale for the last three events with equal consideration given to each one,

Average Structure (x^{13}): the value most closely associated with the average value of structure for the last three events with equal consideration given to each one.

These variables are clearly postulational in nature, but have the primary attribute of instilling a portion of the observational continuity which is required in analyzing the events.

Finally, it is observed that the last pattern of both groups does not represent an interaction situation; rather, this last pattern is used to relate the number of quantification levels recognized in the associated variable. The program discussed in the next Appendix uses this information to form the correct output code. It is also pointed out that the total extent of the pattern space is formed with cartesian product of the variables which is equivalent to the simple product of the values of this last pattern. This occurs as 40,095,000 possible points in the 13-dimensional pattern space. This is associated with 792 possible independent-variable points, 225 possible dependent-variable points, and another 225 possible points due to the extension for dependence on previous values.

The following relates the second level of abstraction of the experimental events of June 19, 1954 to July 7, 1954 [cf. Kern (53)]:

Stage 1 - Rattlers:

A. System objects

1. Goal-oriented interaction ⟶ hierarchical structure

2. Structure ⟶ In-group identity

Stage 1 - Rattlers (Continued)

3. In-group identity → norms

4. Norms → sanctions

B. System inputs		C. System outputs
1. Discovery of swimming hole		1. a) Group selects largest boy (Brown) to make out swim buddy list b) Brown and Mills lead in improving swimming hole
2. Meal must be prepared		2. Simpson leads meal preparation
3. Canoe must be carried		3. Brown and Simpson lead canoe carrying operation
4. Latrine must be dug	"Toughness" norm	4. Brown hands shovel to Simpson; all cooperate in digging latrine
5. Discovery of the dam		5. Mills organizes dam climbing game
6. Canteen list required		6. Mills writes up canteen list
7. Discovery of paper cups		7. Resentment that "outsiders" had been there
8. Tent pitching practice		8. Lack of organization and enthusiasm
9. Group treasure hunt		9. Mills proposes hardball equipment
10. Baseball practice		10. Mills nominates Simpson for Captain (elected) and chooses own position; Mills the recognized leader
11. "Discovery" of the Eagles		11. a) Mills chooses "Rattlers" name for group b) Challenge of the Eagles to play ball game

Stage 1 - Rattlers (Continued)

c) Enthusiasm in possible competitive activities

d) Non-swimmers helped to swim - increase in solidarity and build-up of morale

Stage 1 - Eagles:

A. System objects:

1. Goal-oriented interaction → hierarchical structure
2. Structure → In-group identity
3. In-group identity → norms
4. Norms → sanctions

B. System inputs

1. Campfire
2. Sign left by earlier campers
3. Canoe carrying
4. Bridge building
5. Screen requirement

C. System outputs

1. a) Myers leads in building fire

   b) Craig stops Myers from "bossing"
2. Myers decides name of camp
3. Craig leads in canoe carrying
4. a) Mason leads bridge building

   b) Cutler walks bridge, to the surprise of all (emerging status relationships)
5. a) Craig says screens unnecessary; group disagrees - votes for them

   b) Craig leads in putting up screens

Stage 1 - Eagles (Continued)

6. Softball workout	6. a) Mason the best ball-player b) Craig and Davis scold Myers for clowning
7. Campout requested by boys (reservoir trip)	7. a) Myers astounds all by carrying 3 tents b) Mason says reservoir not good for swimming; Davis supports Mason's opinion c) Craig directs transportation of supplies back home d) Myers pelted with stones for leaving swimsuit and holding up gang e) Craig's song called "our song"
8. Canteen list	8. Craig and Davis take lead in drawing up canteen list
9. Treasure hunt	9. Craig given notes to read; Craig backs Davis' proposal for hardball equipment and instructs boys to sign petition for it. Craig lectures on how to play baseball
10. Baseball practice	10. Craig assigns each boy a number; Myers ignored when he objects to a decision; Craig not ignored when he objects to a decision, and gives in
11. Discovery of the Rattlers	11. Craig instructs staff to challenge Rattlers to a game
Homesickness of Davis and Boyd	Davis drops in status; Davis and Boyd leave for home

Stage 1 - Eagles (Continued)

Practice at wrestling, tumbling, tent pitching, baseball

Enthusiasm in practice

Craig's suggestion of name "Eagles" supported

Craig requires Mason to accept stencil on shirt

Craig tells staff the group has decided to sleep out in a tent

Stage 2

A. System objects:

1 - 4 as in Stage 1

5. Territorial dispute → intergroup hostility

6. Intergroup hostility → challenge to competition

7. Challenge to competition → intergroup interaction

8. Intergroup interaction → frustration

9. Frustration → unfavorable stereotype (of out-group)

10. Frustration/success → in-group solidarity

11. Frustration → change in group structure (+ norms, sanctions)

12. Frustration → reprisals

B. System inputs

12. Mutual challenge to play baseball

13. Day 1: Tournament announced

C. System outputs

12. Enthusiasm in both groups

13. a) Rattler response: Full confidence in victory; spend time in improving "their own" ball field;

Stage 2 (Continued)

	put Rattler flag on backstop; practice for events
	b) Eagle response: Cautious enthusiasm; mild expression of confidence; attach Eagle flag to a pole; practice for events
14. Day 2: First contact at baseball game	14. a) Rattlers show possession of ballfield - they were first to arrive (i.e., as "home team")
	b) Eagles arrive with flag and menacing song
	c) Mutual derogatory name calling, increasing as the game proceeds
15. Group adjustments under stress	15. a) Craig (E) tries to control Myers (E) with words about sportsmanship
	b) Mason (E) begins to displace Craig (E); chooses own pitching replacement; Craig accepts
	c) Rattlers win; and display "good sportsmanship" toward Eagles; Mason threatens his team if they do not try harder; Craig (E) throws Rattler glove into the water
16. Day 2: Lunch together	16. a) Mutual name calling and razing Meyers (E), in saying grace, suggests Eagles' fear that others (like Davis and Boyd) might get homesick and go home

Stage 2 (Continued)

17. Day 2: Practice for other events of tournament	17.	a) Rattlers: show stronger in-group feeling (e.g., deciding to wear their stenciled shirts at every game)
		b) Eagles: Mason takes over leadership of group (lectures on how to win; directs practice for various events); controls group by threatening to go home
18. Day 2: First tug-of-war	18.	a) Mason (E) assumes job of captain for tug-of-war; Simpson (R) assumes same job for Rattlers
		b) Craig (E) withdraws when he perceives Eagles are losing
		c) Rattlers win; show sportsmanship (3 cheers for the Eagles)
		d) Eagles' morale drops (Mason cries, says Rattlers are at least 8th graders, that he is going home, that he will fight)
		e) Eagles burn the Rattlers' flag
19. Day 3: Rattlers' discovery of their burnt flag	19.	a) Rattlers' response: noise and resentment; plan to fight the Eagles
		b) Rattlers and Eagles skirmish; Craig (E) admits that all the Eagles burned the flag
20. Day 3: Second ball game	20.	a) Eagles win the game, with cheers for the losers; ascribe their

Stage 2 (Continued)

			victory to prayers; ascribe Rattlers' loss to their "bad cussing"; decide to avoid cussing and not even to talk to Rattlers who are poor sports and "bad cussers".
			b) Rattlers response to loss of game: much internal friction, mutual recrimination; Brown (R) and Allen (R) write letters to ask to go home; Mills, the Rattler leader patches things up in group
21.	Day 3:	Second tug-of-war	21. a) Eagles employ strategy which brings contest to a tie; Rattlers are fatigued more than Eagles (who sat down and dug-in)
			b) Eagles considered the contest short, the Rattlers considered it long (p. 115)
22.	Day 3:	Rattlers raid Eagles' cabin	22. a) Eagles response: first astonishment, then anger; Craig pretends to sleep through raid
			b) Rattlers response: heroic and jubilant self-expression
23.	Day 4:	Eagles raid Rattlers' cabin	23. a) Rattlers furious at mess in their cabin
			b) Eagles prepare to meet retaliation
24.	Day 4:	Touch football game	24. a) Rattlers win game by narrow margin, and win tent-pitching; morale goes up

Stage 2 (Continued)

	b) Eagles do not feel too bad at losing by narrow margin; Craig walks away from contest
25. Day 4: Third baseball game	25. a) Eagles win; morale goes high; refrain from bragging in presence of Rattlers
	b) Rattlers explain loss because of the heaviness of the bats they used; show increase in in-group solidarity at breakfast next morning (plan to put flags on their property in the camp)
26. Day 5: Remaining contests	26. a) Rattlers win third tug-of-war
	b) Eagles win second tent-pitching
	c) Eagles win third tent-pitching
27. Indication of scores, and requirements to win	27. a) Rattlers decide to raid Eagles cabin if they (Rattlers) <u>win</u>, but not if they lose
	b) Eagles win the treasure hunt
28. Intergroup contacts after tournament results	28. a) Rattlers raid Eagles' cabin and take away prizes won by Eagles
	b) Mason (E) wants to fight; Craig (E), Bryan (E) and McGraw (E) return to cabin
	c) Mason (E) calls Craig and Bryan "yellow"

Stage 2 (Continued)

			d) Fight between groups breaks out and is stopped by counselors
			e) Neither group wants further association with the other; negative attitudes and social distance standardized in each group in relation to the other
29.	Day 6:	"Test situation" Rattlers explore Eagle territory (p. 113)	29. Display of persisting negative attitudes by both groups
30.	Day 7:	Stereotype ratings (pp. 137-138)	30. Tendency (pp. 137-138) to rate in-group favorably and out-group unfavorably; the first tendency more pronounced than the second
31.	Day 7:	Performance estimates (bean toss)	31. Performance of in-group judged significantly higher than that of out-group
			a) Rattlers (the losers of the tournament) overestimated their own performance less than the Eagles overestimated theirs
			b) Rattlers underestimated Eagles' performance, while Eagles overestimated Rattlers' performance (p. 146)
			c) For both groups, performance of in-group members judged significantly higher than that of out-group members
			d) Results reflect in-group solidarity and negative attitudes toward out-group

Stage 3:

A. System objects:

1 - 4 as in Stage 1

5. Frustration → intergroup friction

6. Intergroup friction → resistance to cooperation

7. Superordinate goals → cooperation

8. Cooperation → decrease of friction

B. System inputs

32. Seven contact situations

33. Superordinate Goal (SG) 1: The drinking water problem

C. System outputs

32. Intergroup friction remains: Name-calling, accusations, insults, food-throwing fight

33. a) Boys choose to search in small segregated teams - Eagles going with Eagle staff members, Rattlers going with Rattler staff members

b) Cooperation and communication between groups while trying to extract sack from faucet

1) Several members of each group take turns

2) Craig (E) gives advice to both E's and R's

3) Everett (R) asks Eagle participant observer to try it; staff completes the job

c) Common rejoicing; Ratt-

Stage 3 (Continued)

			lers (who had canteens) let Eagles (who did not have canteens) drink first, with no protest or name calling; some intermingling afterwards
			d) Negative attitudes persist after this SG: insults and food throwing at supper; lack of enthusiasm for idea of a trip together to Cedar Lake
34.	SG 2:	The problem of securing a movie	34. a) Groups decide without argument on choice of movie
			b) Mills (R leader) and Myers (E) lead in reaching a compromise solution for allocating costs between the groups
			c) Mason (E leader) does not participate in solution
			d) McGraw (E) and Martin (R) rend list of contributors
			e) Negative attitudes weaken: some scuffling among a few; one near-fight between Simpson (R) and Mason (E); seating at movie along group lines, with some exceptions; groups reach agreement on taking turns at entering dining room first for meals
35.	SG 3:	Camp-out at Cedar Lake	35. a) Mason (E leader) does not wish to go to Lake with Rattlers; the Rattlers had raised

Stage 3 (Continued)

	some objections previous day b) The two groups swim at same spot, but interact very little
36. SG 4: The truck stalls	36. a) Mills (R leader) suggests a "tug-of-war" against the stalled truck b) Clarke (E) and Mills (R) attach rope to bumper c) Harrison (R) suggests each group pull on a separate piece of rope d) Barton (R) says it doesn't make any difference who pulls where e) Groups pull on separate pieces, except that Swift (big R) joins Eagles as anchor man, and Craig (E) is next to Brown (R anchor man)
37. Contact situation after mutual accomplishment	37. a) Following successful starting of truck, there is much intermingling and friendly talk between groups; Mills (R), Hill (R), Craig (E) and Bryan (E) pump water for each other
38. SG 5: Meal preparation	38. a) Rattlers prefer to alternate meal preparation with Eagles - at Mills (R) suggestion b) Eagles are split on issue:

Stage 3 (Continued)

1) Low status members (Clarke, Cuttler, Lane) favor alternating with Rattlers

2) High status members support Mason's (E leader) opposition to alternating

3) In actual fact, while the two groups discussed their preferences about alternating, food preparation together began. (This was a result, in part, of having bulk food which had to be divided)

c) Negative attitudes decrease:

1) No one scolded Myers (E) for salting the Kool Aid by mistake; Harrison (R) even exonerated him

2) Low status members on each side particularly active in preparing and distributing food

3) Eating takes place in partly integrated fashion

4) At swim following this (p. 173), the groups are brought closer together by seeing a water moccasin; groups mix together in water

39. SG 6: Tent pitching

39. a) Cooperation in sorting out tent parts

Stage 3 (Continued)

b) Lack of competition - Rattlers lacked a mallet and Eagles had uneven site

c) No negative attitudes in evidence

40. SG 7: The truck stalls again

40. a) Rattlers initiate pushing truck, which gets rolled into a tree

b) Mills (R leader) gets tug-of-war rope; groups mix in pulling on same lines

c) Cooperative pattern established

1) In tug-of-war against the truck - groups mix

2) In meal preparation - Rattlers and Eagles work side by side

3) All eat together, with no group lines evident

4) Engage in friendly water fight, but not along group lines (p. 175)

41. SG 8: The trip to the border

41. a) McGraw (E) suggests that the Rattlers go to Arkansas first in their truck, and that Eagles go when they have returned

b) Mason (E leader) wants to return instead to Robbers Cave; Craig (E) supports him

c) Mills (R) proposes they

Stage 3 (Continued)

all go together in Rattler truck; Allen (low status R) and several Eagles support him; Simpson (R) says "let's don't".

d) Mills (R) and Clarke (E) settle the matter by leading a rush to get into the Rattler truck

e) Negative attitudes give way to cooperation, group singing; both groups instruct Myers (E) and Martin (R), who volunteered to draw up ice-cream lists, to do it together; they generally approve plan to ride bus together back to Oklahoma City (with Harrison (R) dissenting; and Mills (R) supporting it after he saw the rest wanted it)

42. SG 9: Last evening in camp

42. a) Groups enter mess hall separately (after discussion, the Eagles went first by agreement), and get food separately

b) Table arrangement made it difficult to sit by groups - they mixed with remarking on it

c) They agree (under Mill's (R) influence) to joint campfire at Stone Corral (part of R's territory)

d) They take turns at entertaining one another all evening

Stage 3 (Continued)

e) No evidence of negative attitudes remains

43. SG 10: The trip home

43. a) They decide to ride bus together

b) Seating arrangement does not follow group lines, as they go together on the bus

c) Mills (R) suggest R's $5.00 prize be spent to buy malts for all boys, both R's and E's Rattlers approve

d) Negative attitudes gone (Note: on pp. 185-196 are results of tests showing attitude changes under conditions of Stage 3)

Table A-1. Simulational Descriptors

Variable	Indicant	Possible Classes	Numeric Value	Number of Levels
x^1	structure (dependent)	low medium high	1 2 3	3
x^2	morale (dependent)	low medium high	1 2 3	3
x^3	attitude (dependent)	very bad bad indifferent good very good	1 2 3 4 5	5
x^4	frustration (dependent)	very frustrated frustrated neutral unfrustrated very unfrustrated	5 4 3 2 1	5
x^5	goal type (independent)	competitive neutral cooperative	3 2 1	3
x^6	goal value (independent)	none low medium high	0 1 2 3	4
x^7	goal attainment (independent)	attained tie not attained	3 2 1	3
x^8	presence (independent)	present not present	1 0	2
x^9	times in succession of same goal type	up to 11	1 2 3 4 5 6 7 8 9 10 11	11

Table A-2. Simulation Patterns for Rattler Group

Event Number	x^1	x^2	x^3	x^4	x^5	x^6	x^7	x^8	x^9	x^{10}	x^{11}	x^{12}	x^{13}
1	1	2	3	3	2	2	3	0	1	3	3	1	1
2	1	2	3	3	2	2	3	0	2	3	3	2	1
3	1	2	3	3	2	1	3	0	3	3	3	2	1
4	1	2	3	3	2	1	3	0	4	3	3	2	1
5	2	2	3	3	2	2	3	0	5	3	3	2	1
6	2	2	3	3	2	2	3	0	6	3	3	2	1
7	2	2	3	3	2	2	3	0	7	3	3	2	1
8	2	2	3	3	2	1	3	0	8	3	3	2	2
9	2	2	3	3	2	3	3	0	9	3	3	2	2
10	3	2	3	3	2	2	3	0	10	3	3	2	2
11	3	2	2	3	2	2	3	1	11	3	3	2	2
12	3	3	2	3	1	3	2	1	1	3	3	2	3
13	3	3	3	3	1	3	2	1	2	3	2	3	3
14	3	3	2	4	1	3	2	1	3	3	2	3	3
15	3	3	3	3	1	3	3	1	4	4	2	3	3
16	3	3	2	4	2	0	2	1	1	3	3	3	3
17	3	3	3	3	2	1	3	0	2	4	2	3	3
18	3	3	3	3	1	2	3	1	1	3	3	3	3
19	3	3	2	4	2	3	2	1	1	3	3	3	3
20	3	2	2	5	1	3	1	1	1	4	3	3	3
21	3	2	1	5	1	3	1	1	2	5	2	3	3
22	3	3	2	4	2	3	3	1	1	5	2	2	3
23	3	3	2	5	2	0	1	1	2	4	2	2	3
24	3	3	2	3	1	2	3	1	1	5	2	3	3
25	3	3	2	4	1	3	1	1	2	3	2	3	3
26	3	3	2	5	1	3	1	1	3	4	2	3	3
27	3	3	1	4	1	3	3	1	4	5	2	3	3
28	3	3	1	5	1	0	1	1	5	4	2	3	3
29	3	3	2	4	2	0	3	1	1	5	1	3	3
30	3	3	2	5	2	0	1	1	2	4	1	3	3
31	3	3	2	4	3	2	3	1	1	5	1	3	3
32	3	3	2	4	3	2	3	1	2	4	2	3	3
33	3	3	2	4	2	1	3	1	1	4	2	3	3
34	3	3	3	3	3	3	3	1	1	4	2	3	3
35	3	3	3	2	3	3	3	1	2	3	2	3	3
36	3	3	4	2	3	2	3	1	3	2	3	3	3
37	3	3	4	1	2	2	2	1	1	2	3	3	3
38	3	3	4	1	3	2	3	1	1	1	4	3	3
39	3	3	5	1	3	2	2	1	2	1	4	3	3
40	3	3	5	1	2	2	2	1	1	1	4	3	3
41	3	3	5	1	2	2	2	1	2	1	5	3	3
No. of Levels													
42	3	3	5	5	3	4	3	2	11	5	5	3	3

Values given are according to the events of the content analysis and the variables of Table A-1.

Table A-3. Simulation Patterns for Eagle Group

Event Number	x^1	x^2	x^3	x^4	x^5	x^6	x^7	x^8	x^9	x^{10}	x^{11}	x^{12}	x^{13}
1	1	2	3	3	2	1	3	0	1	3	3	2	1
2	1	2	3	3	2	1	3	0	2	3	3	2	1
3	2	2	3	3	2	1	3	0	3	3	3	2	1
4	1	2	3	3	2	3	3	0	4	3	3	2	1
5	1	2	3	3	2	2	3	0	5	3	3	2	1
6	2	2	3	3	2	2	3	0	6	3	3	2	1
7	3	2	3	3	2	2	3	0	7	3	3	2	2
8	3	2	3	3	2	2	3	0	8	3	3	2	3
9	3	2	3	3	2	3	3	0	9	3	3	2	3
10	3	2	3	3	2	2	3	0	10	3	3	2	3
11	3	2	2	3	2	2	3	1	11	3	3	2	3
12	3	2	2	3	1	3	2	1	1	3	3	2	3
13	3	3	3	3	1	3	2	1	2	3	2	2	3
14	2	2	2	4	1	3	2	1	3	3	2	2	3
15	2	1	2	4	1	3	1	1	4	4	2	2	2
16	2	1	2	4	2	0	2	1	1	4	2	2	2
17	2	2	3	3	2	1	3	0	2	4	2	1	2
18	3	1	2	4	1	2	1	1	1	3	2	1	2
19	3	2	2	5	2	3	3	1	1	4	2	1	2
20	3	3	3	4	1	3	3	1	1	5	2	2	2
21	3	3	3	3	1	3	3	1	2	4	2	2	2
22	3	3	1	4	2	0	1	1	1	3	3	3	3
23	3	3	2	3	2	3	3	1	2	4	2	3	3
24	3	3	2	4	1	2	1	1	1	3	2	3	3
25	3	3	2	3	1	3	3	1	2	4	2	3	3
26	3	3	2	3	1	3	1	1	3	3	2	3	3
27	3	3	2	4	1	0	1	1	4	3	2	3	3
28	3	3	1	5	1	0	1	1	5	4	2	3	3
29	3	2	2	4	2	0	1	1	1	5	2	3	3
30	3	3	1	5	2	0	3	1	2	4	2	3	3
31	3	3	2	4	3	3	3	1	1	5	1	3	3
32	3	3	2	4	3	2	3	1	2	4	2	3	3
33	3	3	2	4	2	1	3	1	1	4	2	3	3
34	3	3	3	3	3	3	3	1	1	4	2	3	3
35	2	3	3	2	3	3	3	1	2	3	2	3	3
36	1	3	4	2	3	2	3	1	3	2	2	3	3
37	1	3	4	1	2	2	3	1	1	2	3	3	2
38	1	3	4	1	3	2	2	1	1	1	4	3	1
39	1	3	5	1	3	2	3	1	2	1	4	3	1
40	1	3	5	1	2	2	2	1	1	1	5	3	1
41	1	3	5	1	2	2	2	1	2	1	5	3	1
No. of Levels													
42	3	3	5	5	3	4	3	2	11	5	5	3	3

Values given are according to the events of the content analysis and the variables of Table A-1.

APPENDIX B

FLOW DIAGRAM OF THE GELISIMA PROGRAM IN FORTRAN IV

The following pages contain a flow chart of the GELISIMA (generalized linear-element simulation machine) program used in this study. This program is useful for general categorization problems requiring several adaptive threshold elements with multilevel quantized inputs.

The program simulates a machine organization as in Figure 4.2 and, therefore, has the limitation that the loci of -1 encodings must be convex. The implications of this restriction along with more significant program features were described in earlier sections.

Some of the other convenient features include an option on the initial values of adaptable weights; the weights may be read in from data cards or all set to the same floating point number (1.0 in this case). Another feature is that the same program may be used for testing new patterns against a previously calculated set of weights.

Each data deck is preceded by a control card and any number of problems may be solved in a single computer run simply by specifying the upper limit of the first iteration statement and following one data deck with a control card and the next data deck. The control constants used are defined as follows:

JTS number of inputs to each adaline

JDP number of dependent variables

JIP number of independent variables plus one for the threshold coefficient

JN number of patterns used in training or testing

IN programmed number of iterations of weight changes of a particular adaline element before testing its response to the training set

ILP limit to the number of adaline elements for any madaline - a fewer number are used if complete separation is achieved before this limit

IMP limit to the number of madaline structures - corresponds to the number of binary components required in the encoding of a dependent variable

DLW initial increment for calculating the partial derivatives of the mean square error with respect to each weight

DLP initial increment for calculating the first and second derivatives of mean-square error with respect to adaptation gain

KSTOP set equal to 0 to bypass adaptation

set equal to 1 for adaptation plus readout of patterns on trained machine

NSTOP control for initial values of adaptable weights

set equal to 0 to fix all weights at 1.0

set equal to 1 to read weights from data cards

KOC set equal to 0 to compute output encoding

set equal to 1 to read output encoding from data cards

JXD distance between adjacent levels of output code

JYD distance multiplier for each additional level past adjacent levels and added to the adjacent distance.

Following a control card is the pattern set which is transferred into a two dimensional array ($H_{NPA,I}$) in the computer memory. Added to the regular pattern set is a final pattern indicating the number of quantization levels in each pattern coordinate. The product of the number of patterns in the training set and the number of inputs is limited by the size of the computer memory. Some modifications were required in the program structure to allow usage of the University of Oklahoma's 32K 360/40 to accommodate forty-one training patterns of thirteen inputs to each of up to nine adaline elements in as many as seventeen madalines. There is some evidence that greater sophistication in programming, such as a modular or overlay construction, could greatly enlarge the allowable number and dimension of patterns on which training or testing is to be performed. In order to write the programs in Fortran IV, it was necessary to change the notation from that of the present literature and Chapters I through IV. This innocuous step is clearly followed through study of the flow chart.

I

GELISIMA PROGRAM FOR ROBBERS CAVE SIMULATION

AN APPLICATION OF PATTERN RECOGNITION

TECHNIQUES TO ASCERTAIN INTERNAL DEPENDENCIES

```
      DOUBLE PRECISION Y,SDNJ,DLW,DLP
      DOUBLE PRECISION ESQB,WIN,ESQC,ESQA
      DOUBLE PRECISION DEO,GJ,GK,EJ,EK
      DOUBLE PRECISION DAD, TDE,EDE,RCE
      DOUBLE PRECISION DEP,ESDAP,ESDCP,DPI
      DOUBLE PRECISION TEPI,DOP,EFDP,P
      DOUBLE PRECISION ADG,DRSE,TDSE,RAC
      DOUBLE PRECISION H(42,17),F(17,50)
      DOUBLE PRECISION DCE(20),DVE(20),AMG(30)
      DOUBLE PRECISION HMG(50),DFF(17),DRMG
      DOUBLE PRECISION DAP(30),GCL(17),V(5,5,20)
      DOUBLE PRECISION RMS(75),ADV(15),PIN
      DOUBLE PRECISION A(17,9,16),G(50),E(50)
      DOUBLE PRECISION DLE(16),DRE(16)
      DOUBLE PRECISION FMG
      DIMENSION L(17,9),JFF(17),KF(42)
      DIMENSION LER(17,9)
1     FORMAT (7I5,2F6.3,5I5)
2     FORMAT (13F6.1)
3     FORMAT (4D20.8)
4     FORMAT (17F4.1)
5     FORMAT (I3)
6     FORMAT (20I3)
```

I

(CONTINUED ON PAGE 2)

```
GELISIMA PROGRAM FOR ROBBERS CAVE SIMULATION  PAGE   2
                          I
    7          FORMAT (9F4.1)
    8          FORMAT (7D17.8)
    9          FORMAT (17I8)
   49          FORMAT (1H1,13H NEW GELISIMA)
   50          FORMAT (28H ITERATIVE ELEMENT   DEP VAR,
               I3,7H,   MAD=I3,7H,   ADA,I3)
   51          FORMAT (3(1X,10D11.4,/))
   52          FORMAT (10H ADALINE (I3,2H ,,I3,2H ,,I3,2H ))
   53          FORMAT (11H ITERATION ,I3)
   54          FORMAT (11H RMS ERROR=,D24.12)
   55          FORMAT (17H ADAPTATION GAIN=,D24.12)
   56          FORMAT (5H KGL=,I5)
   57          FORMAT (34H ILP=1 ASSUMES LINEAR SEPARABILITY)
   58          FORMAT (1HO,33H NUMBER OF INCORRECT PATTERNS PER,
               34H MADALINE(ROW) AND ADALINE(COLUMN))
   59          FORMAT (1X,50I2)
   60          FORMAT (14H 8 IMPLIES PIC)
   61          FORMAT (5H SAT=,I3)
   62          FORMAT (14H FINAL WEIGHTS,/)
   63          FORMAT (29H TRAINED MACHINE OUTPUT   DEP,
               4H VAR,I3,4H MAD,I3,4H PAT,I3,3H = ,I2)
   64          FORMAT (14H CONF LEVEL = ,D10.4)
   65          FORMAT (13H OUTPUT CODE ,9F4.1)
   66          FORMAT (13H OUTPUT CODE ,17F4.1)
   67          FORMAT (1/,25H PATTERNS IMPROPERLY CATE,
               40HGORIZED FOR THE PRESENT ADALINE AND CODE/
               4H ARE,I3,4H OF ,I3,5H WITH,I3,10H -1S AS &1)
   68          FORMAT (29H 2ND LEVEL ADAPTATION PARAMET,
               37HERS  ESDCP  ESQB  ESDAP  DPI  TEPI  D,
               7HOP  PIN)
   69          FORMAT (29H NUMBER OF PATTERNS PER MADAL,
               40HINE SEPARABLE UNDER CONVEXITY ASSUMPTION)
                          I
     (CONTINUED ON PAGE   3)
```

```
GELISIMA PROGRAM FOR ROBBERS CAVE SIMULATION  PAGE   3
                        I
 71          FORMAT (/,19H REDUNDANT ADALINE )
 72          FORMAT (29H RELATIVE ADALINE INCREMENT =,
             D14.8,16H ADA MAGNITUDE =,D14.8)
 73          FORMAT (1H0,10X,23H NEW DEPENDENT VARIABLE)
 74          FORMAT (29H DIRECTIONAL DERIVATIVES ESQA,
             29H ESQB ESQC DAD TDE DRE(N) WIN)
 75          FORMAT (32H NONCONVEXITY CONDITION PATTERN ,I3)
 76          FORMAT (18H TRAINING RESULTS , 17F4.1)
 77          FORMAT (1H0,25H UNSEPARABLE WITHOUT MORE,
             37H ADALINES, TRAINING, OR DIMENSIONS BY,
             5H KFL=,I5)
 78          FORMAT (1H ,22H CONVEXITY ASSUMPTIONS,
             11H UNVERIFIED)
                        I
             ------------------------------------------
             I NRD   =1                               I
             I NPU   =2                               I
             I NPR   =3                               I
             ------------------------------------------
                        I
                        I
                 +-------------+
                + DO           +
+++++++++++       690          +
+               + LJK=1,4      +
+                +-------------+
+                       I
+
+       ***WRITE (NPR,49)
+
+       ***READ (NRD,1) JTS,JDP,JIP,JN,IN,ILP,IMP,
+          DLW,DLP,KSTOP,NSTOP,KOC,JXD,JYD
+                       I
+            ------------------------------------------
+            I JPP   =JDP                             I
+            I JA    =1                               I
+            I JB    =JTS                             I
+            I JE    =ILP                             I
+            I JC    =IMP                             I
+            I RDW   =(1.0D0)/DLW                     I
+            I JPL   =JN&1                            I
+            ------------------------------------------
+                       I
+                       I
+                +-------------+
+               + DO           +
+++++++++++       100          +
+               + NPA=1,JPL    +
+                +-------------+
+                       I
+                       I
```

(CONTINUED ON PAGE 4)

```
GELLSIMA PROGRAM FOR ROBBERS CAVE SIMULATION  PAGE   4
     +                    I
     +
 100 ++++++++READ (NRD,2) (H(NPA,I),I=1,JB)
     +                    I
     +          ------------------------------------------
     +          I JB    =JB&1                             I
     +          ------------------------------------------
     +                    I
     +                    I
     +              +-----------+
     +            + DO          +
     ++++++++++     101           +
     +            + NPA=1,JN      +
     +              +-----------+
     +                    I
     +                    I
     +          ------------------------------------------
 101 +++++++++I H(NPA,JB) =1.0                            I
     +          ------------------------------------------
     +                    I
     +          ------------------------------------------
 102 +          I M     =(3*JXD&JYD)/2                    I
     +          ------------------------------------------
     +                    I
     +                    I
     +              +-----------+
     +            + DO          +
     ++++++++++     103           +
     +            +  I=1,3        +
     +              +-----------+
     +                    I
     +
 103 +++++++++READ (NRD,7) (V(3,I,J),J=1,M)
     +                    I
     +              +-----------+
     +            + DO          +
     ++++++++++     104           +
     +            + I=1,3         +
     +              +-----------+
     +                    I
     +
 104 +++++++++WRITE (NPR,7) (V(3,I,J),J=1,M)
     +                    I
     +          ------------------------------------------
     +          I M     =(JXD&3*((JXD&JYD)/2))            I
     +          ------------------------------------------
     +                    I
     +                    I
     +              +-----------+
     +            + DO          +
     ++++++++++     105           +
     +            +  I=1,5        +
     +              +-----------+
     +                    I
     +
 105 +++++++++READ (NRD,4) (V(5,I,J),J=1,M)
     +                    I
       (CONTINUED ON PAGE   5)
```

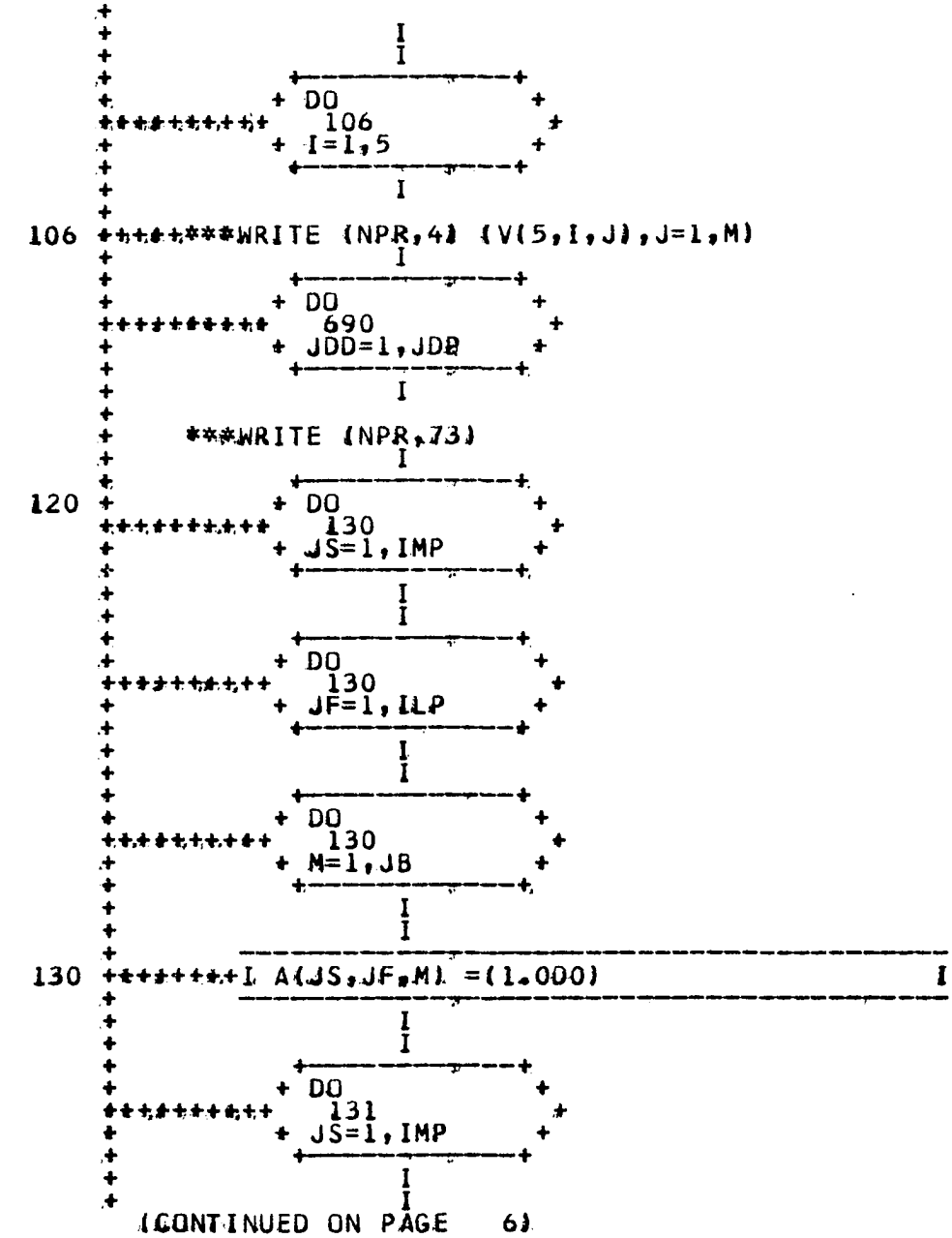

(CONTINUED ON PAGE 6)

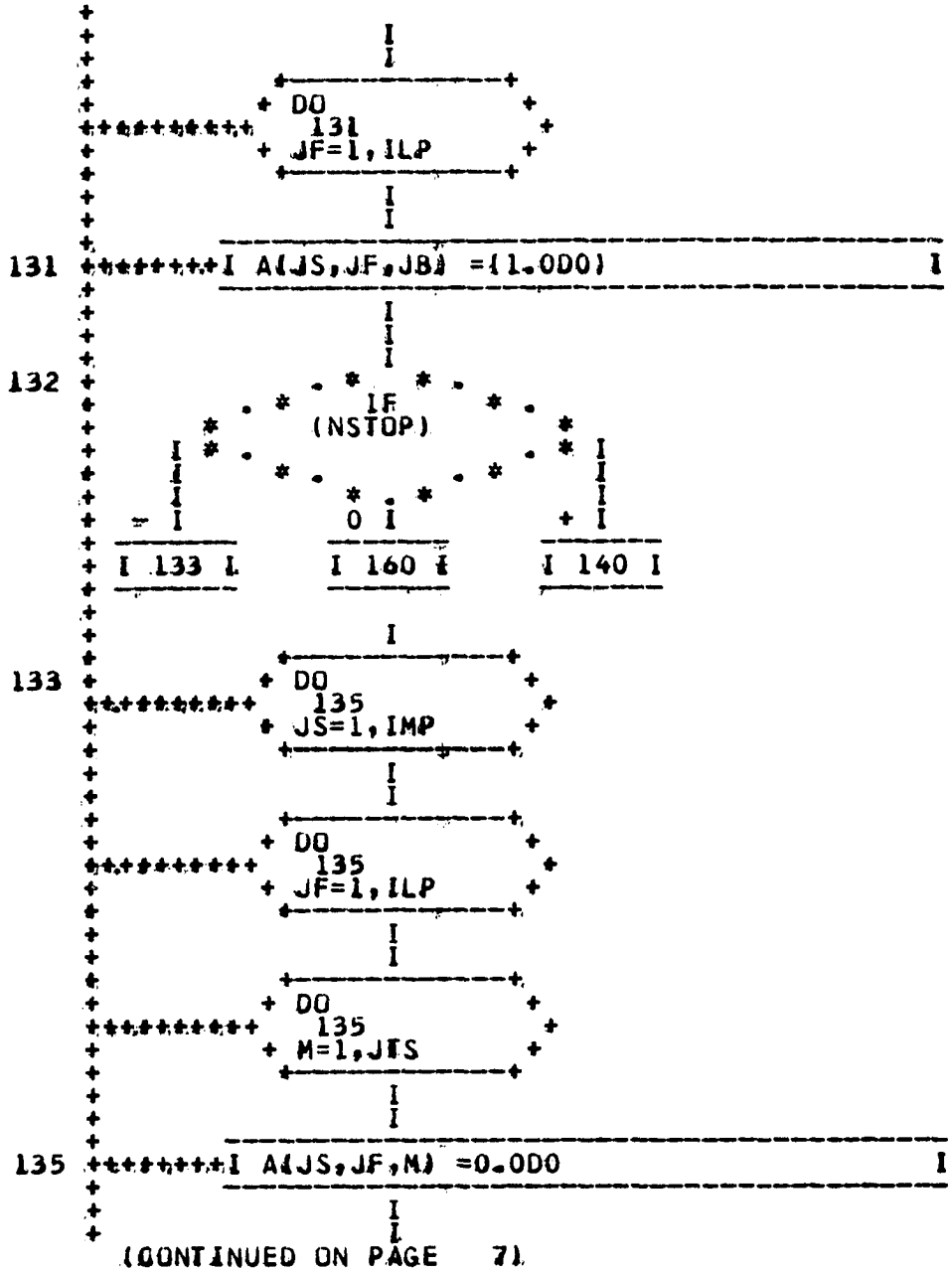

(CONTINUED ON PAGE 7)

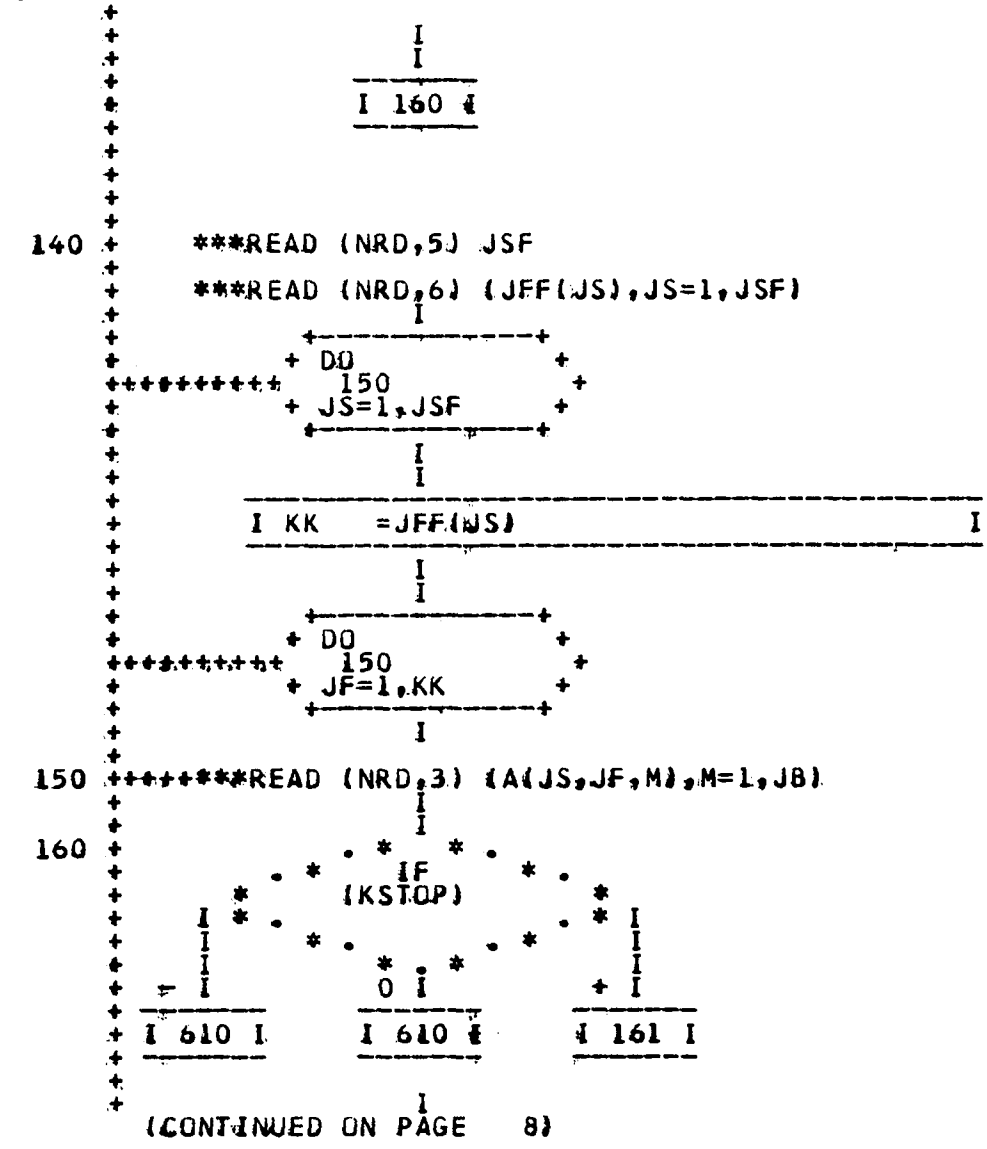
160
140 ***READ (NRD,5) JSF
***READ (NRD,6) (JFF(JS),JS=1,JSF)
DO 150 JS=1,JSF
KK =JFF(JS)
DO 150 JF=1,KK
150 READ (NRD,3) (A(JS,JF,M),M=1,JB)
160
IF (KSTOP) 0
610
610
161
(CONTINUED ON PAGE 8)

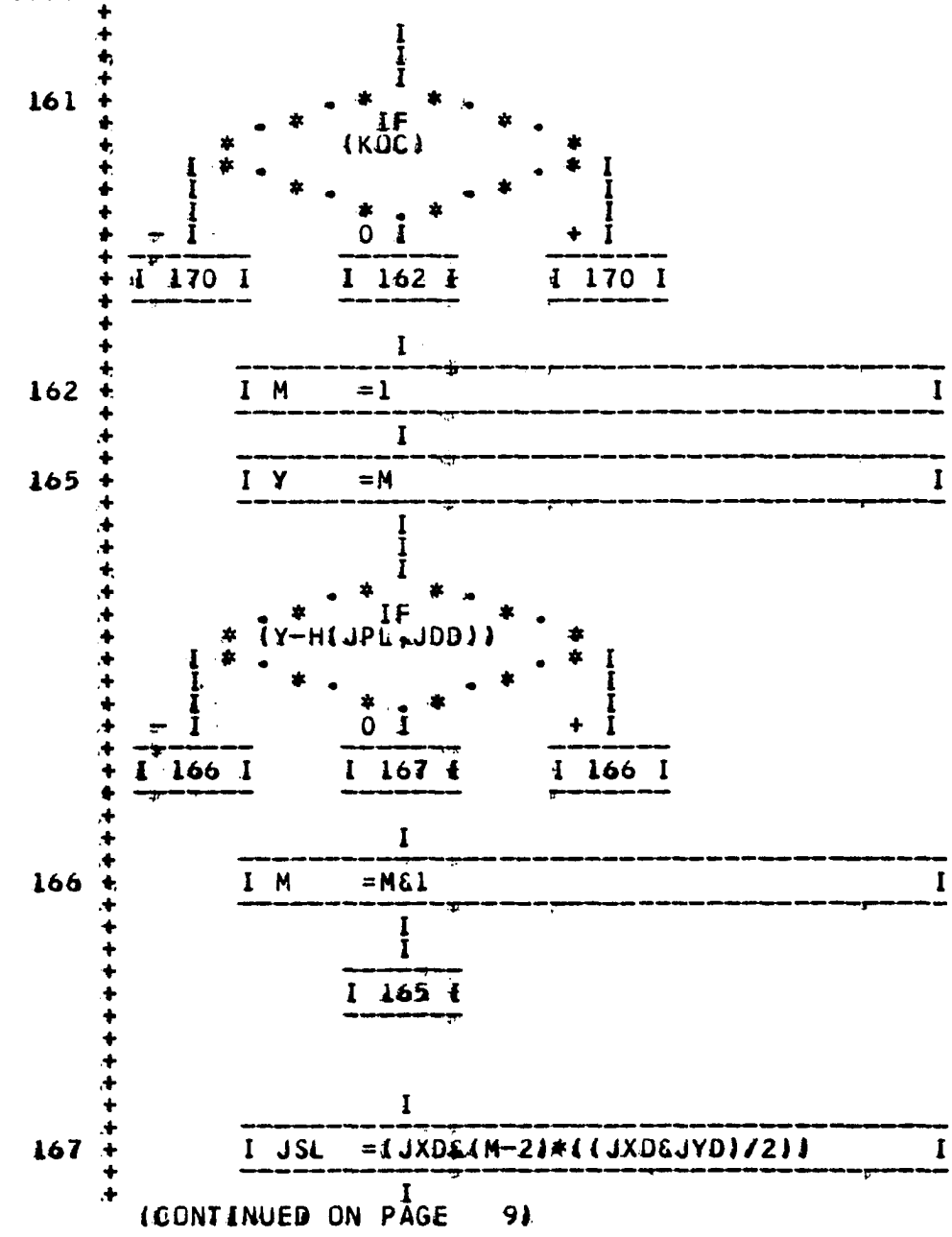

(CONTINUED ON PAGE 9)

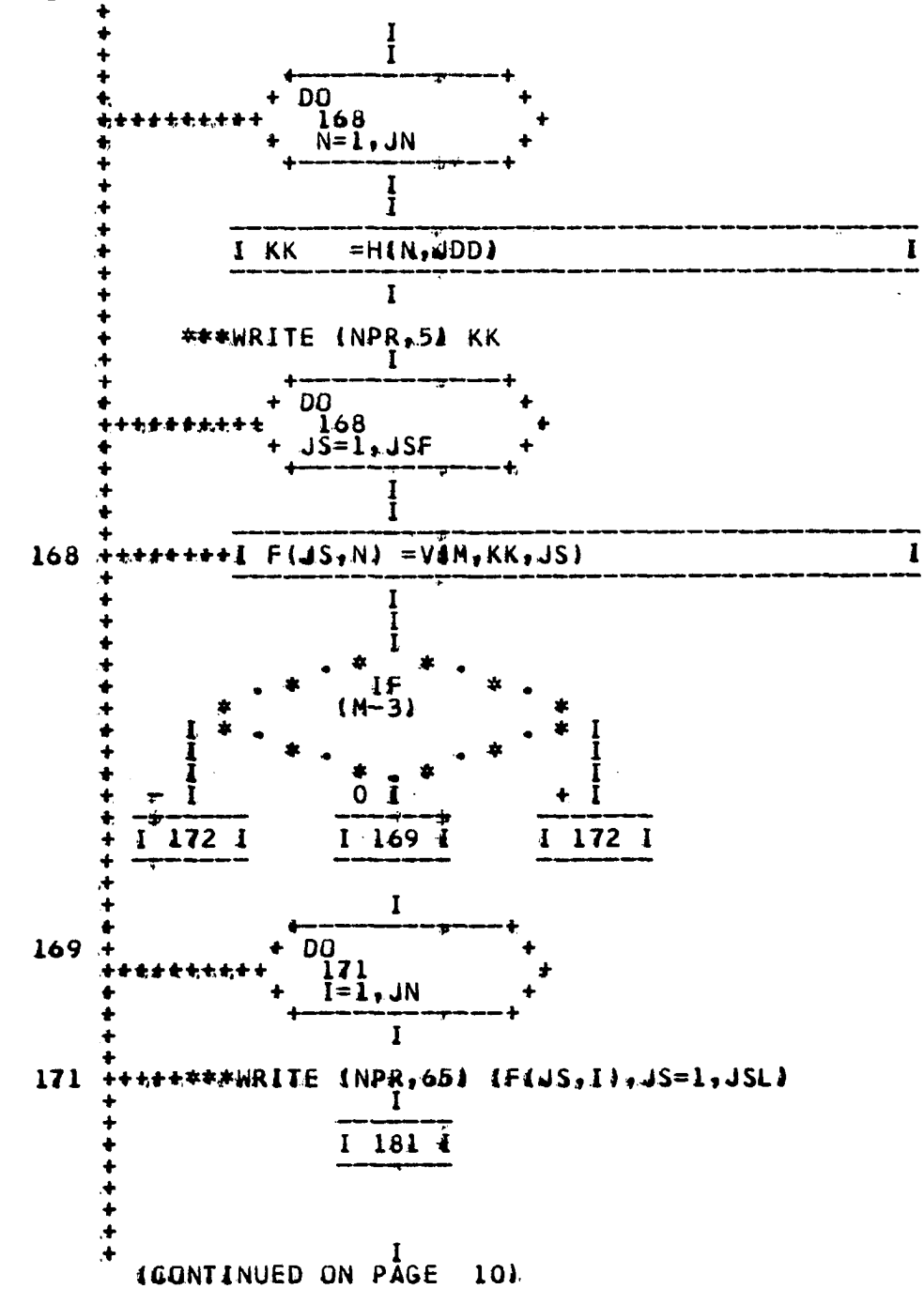

(CONTINUED ON PAGE 10)

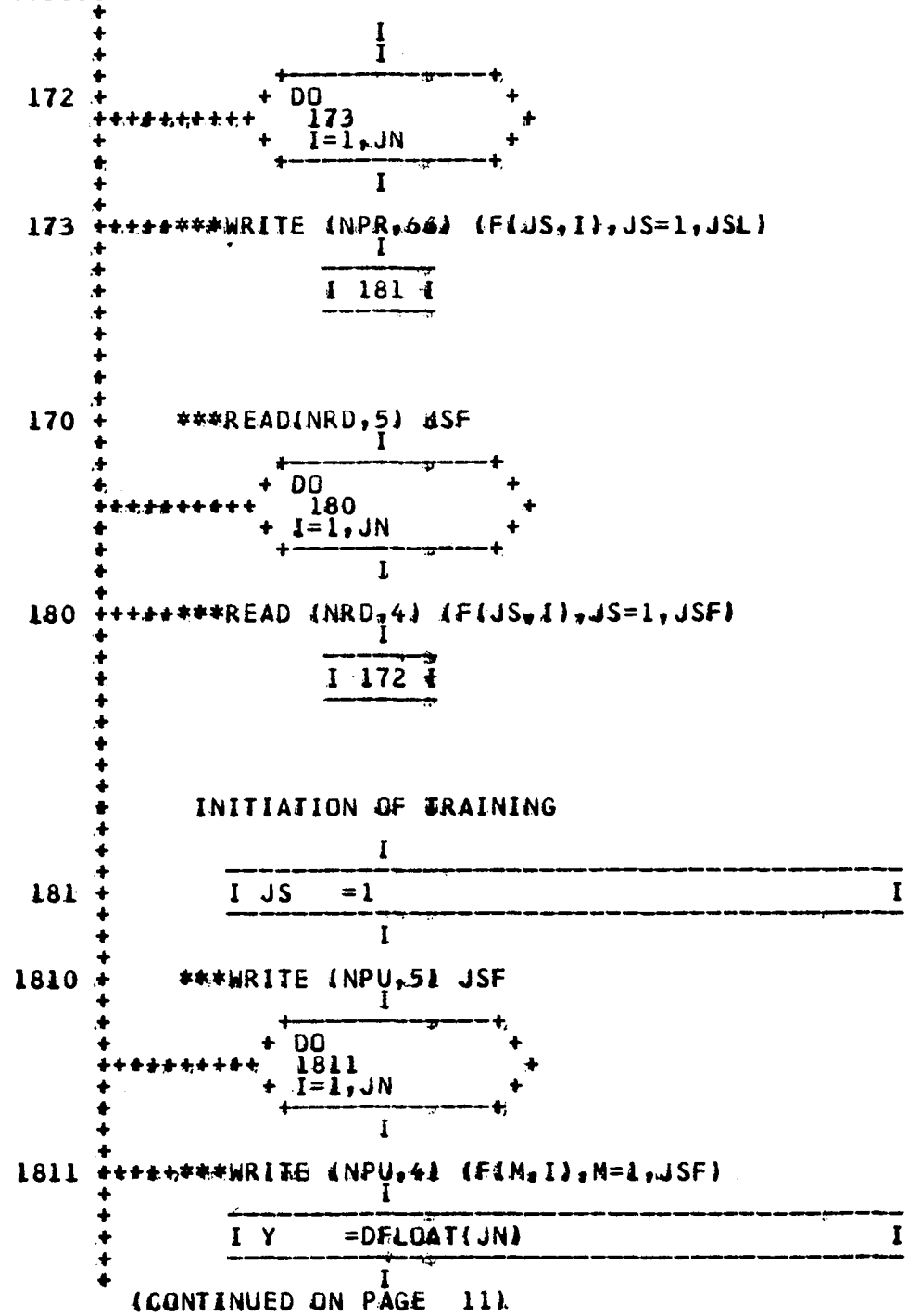

(CONTINUED ON PAGE 11)

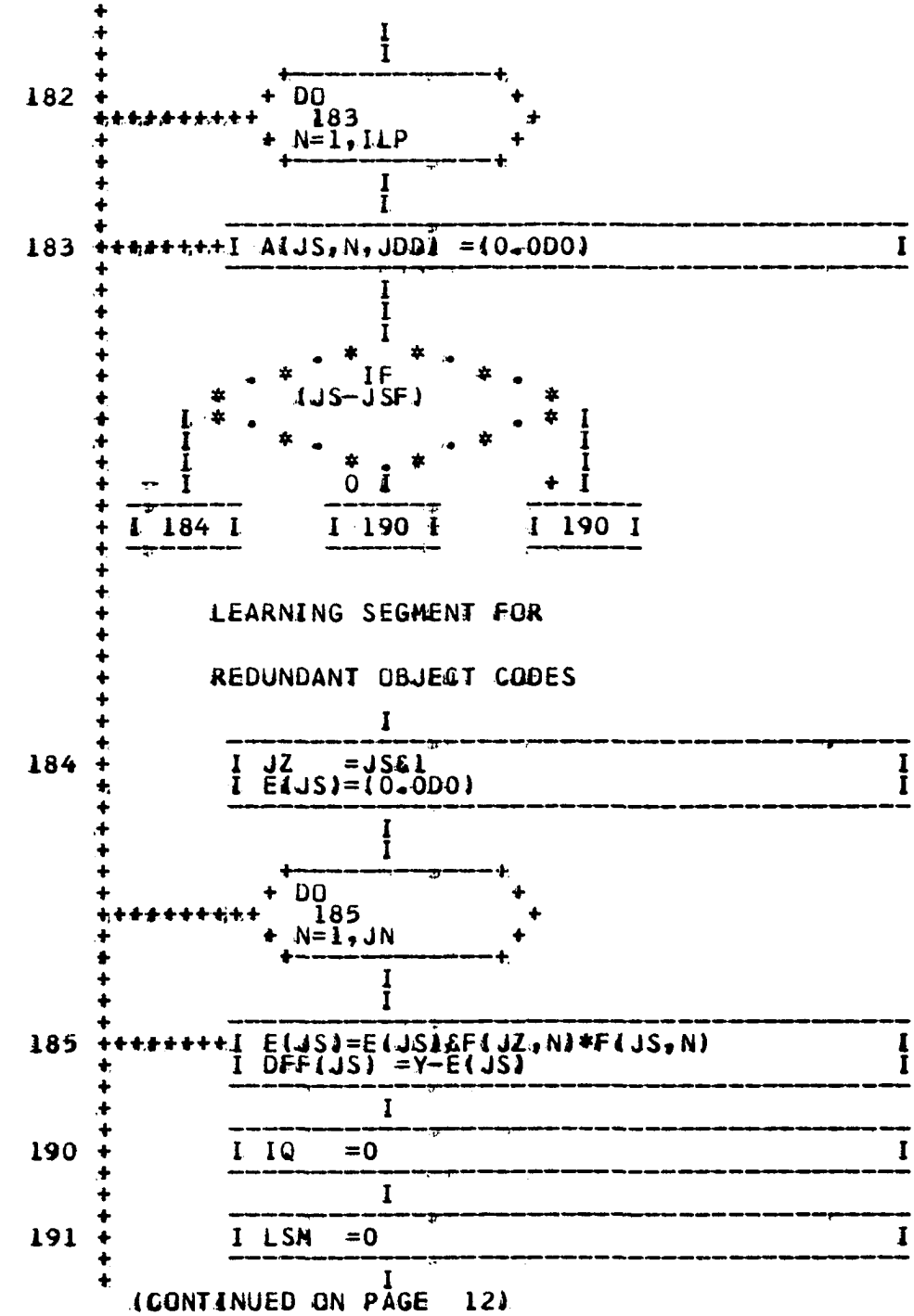

(CONTINUED ON PAGE 12)

```
GELISIMA PROGRAM FOR ROBBERS CAVE SIMULATION  PAGE  12
     +
     +                    I
 192 +        LSD=0
     +                    I
     +        ------------------------------------------
     +        I JF    =1                                I
     +        ------------------------------------------
     +                    I
     +        ------------------------------------------
 200 +        I IQ    =IQ&1                             I
     +        I MFP   =0                                I
     +        I MFQ   =0                                I
     +        ------------------------------------------
     +                    I
     +        ------------------------------------------
 201 +        I ESQB =(0.0D0)                           I
     +        I P     =0.0D0                            I
     +        ------------------------------------------
     +                    I
     +
     +     ***WRITE (NPR,50) JDD,JS,JF
     +
     +     ***WRITE (NPR,51) (A(JS,JF,M),M=1,JB)
     +                    I
     +        ------------------------------------------
 202 +        I AMG(JF) =0.0D0                          I
     +        ------------------------------------------
     +                    I
     +                    I
     +            +-------------+
     +            + DO          +
     +++++++++++    203         +
     +            + I=JA,JB     +
     +            +-------------+
     +                    I
     +                    I
     +        ------------------------------------------
 203 +++++++++I AMG(JF) =AMG(JF)&A(JS,JF,I)*A(JS,JF,I)I
     +        I RAC   =AMG(JF)                          I
     +        I AMG(JF) =DSQRT(RAC)                     I
     +        ------------------------------------------
     +                    I
     +                    I
     +            +-------------+
     +            + DO          +
     +++++++++++    206         +
     +            + M=1,JN      +
     +            +-------------+
     +                    I
     +                    I
     +        ------------------------------------------
 204 +        I HMG(M) =0.0D0                           I
     +        ------------------------------------------
     +                    I
```

(CONTINUED ON PAGE 13)

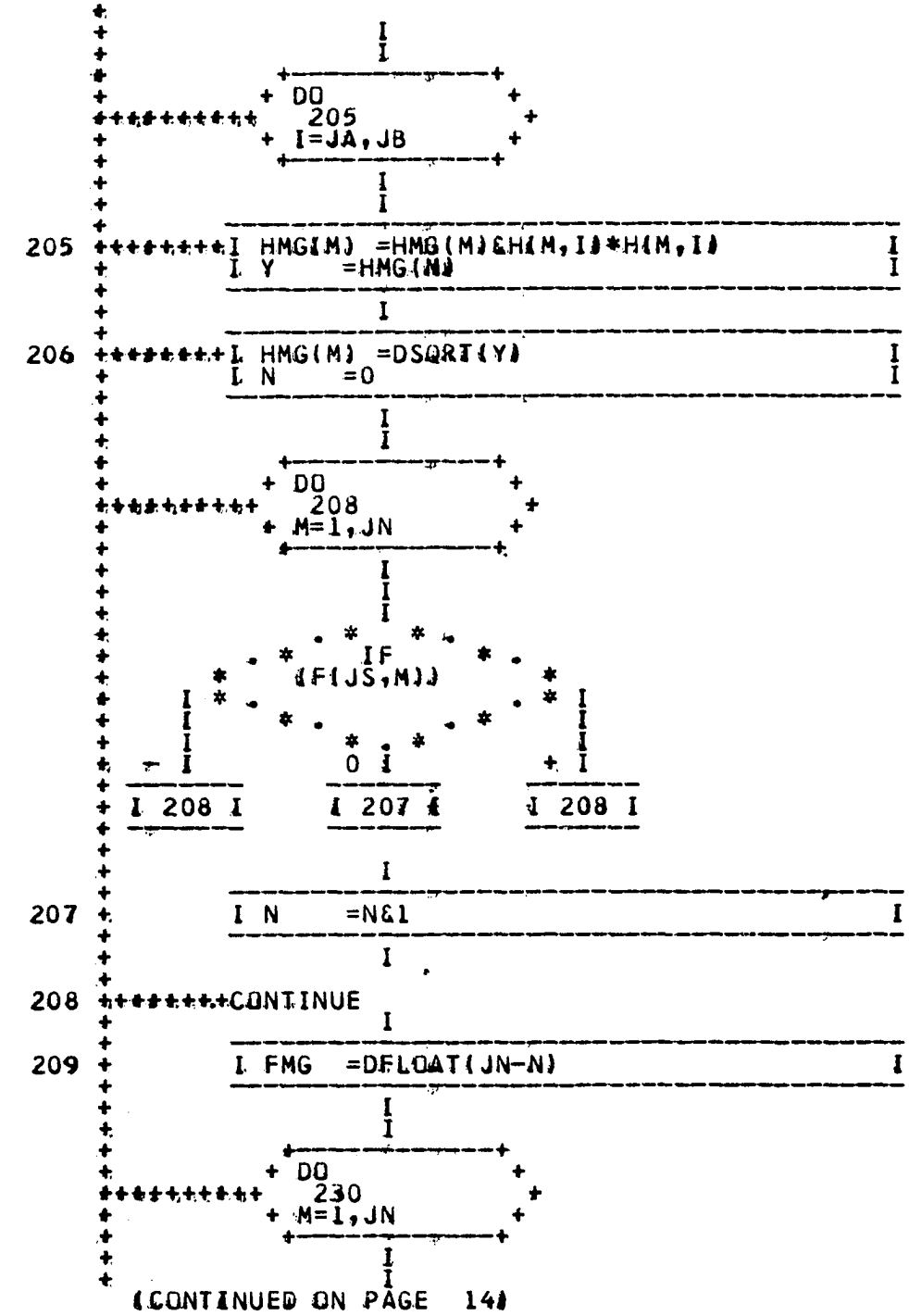

(CONTINUED ON PAGE 14)

```
      +                    I
      +
      +        PRESENT SUM OF
      +
      +
      +        SQUARED ERRORS
      +
      +                    I
      +          ------------------------------------------
  210 +          I G(M) =(0.0D0)                           I
      +          ------------------------------------------
      +                    I
      +                    I
      +              +-------------+
      +            + DO            +
      ++++++++++++   220            +
      +            + I=JA,JB       +
      +             +-------------+
      +                    I
      +                    I
      +          ------------------------------------------
  220 ++++++++++I G(M) =G(M)&A(JS,JF,I)*H(M,I)             I
      +          I E(M) =F(JS,M)-G(M)                      I
      +          I ESQB =ESQB&E(M)*E(M)                    I
      +          ------------------------------------------
      +                    I
      +
  230 ++++++++++CONTINUE
      +                    I
      +              +-------------+
      +            + DO            +
      ++++++++++++   260            +
      +            + N=JA,JB       +
      +             +-------------+
      +                    I
      +                    I
      +          ------------------------------------------
      +          I DRE(N) =0.0D0                           I
      +          I LOS  =0                                 I
      +          I WIN  =(15.0D0)*DLW)                     I
      +          ------------------------------------------
      +                    I
      +          ------------------------------------------
  233 +          I ESQC =(0.0D0)                           I
      +          I ESQA =(0.0D0)                           I
      +          I DEO  =DRE(N)                            I
      +          I WIN  =(2.0D-1)*WIN                      I
      +          I TDSE =KAC&WIN*WIN                       I
      +          I DRSE =2.0D0*WIN*A(JS,JF,N)              I
      +          I DEP  =DSQRT(TDSE-DRSE)                  I
      +          ------------------------------------------
      +                    I
      +                    I
        (CONTINUED ON PAGE  15)
```

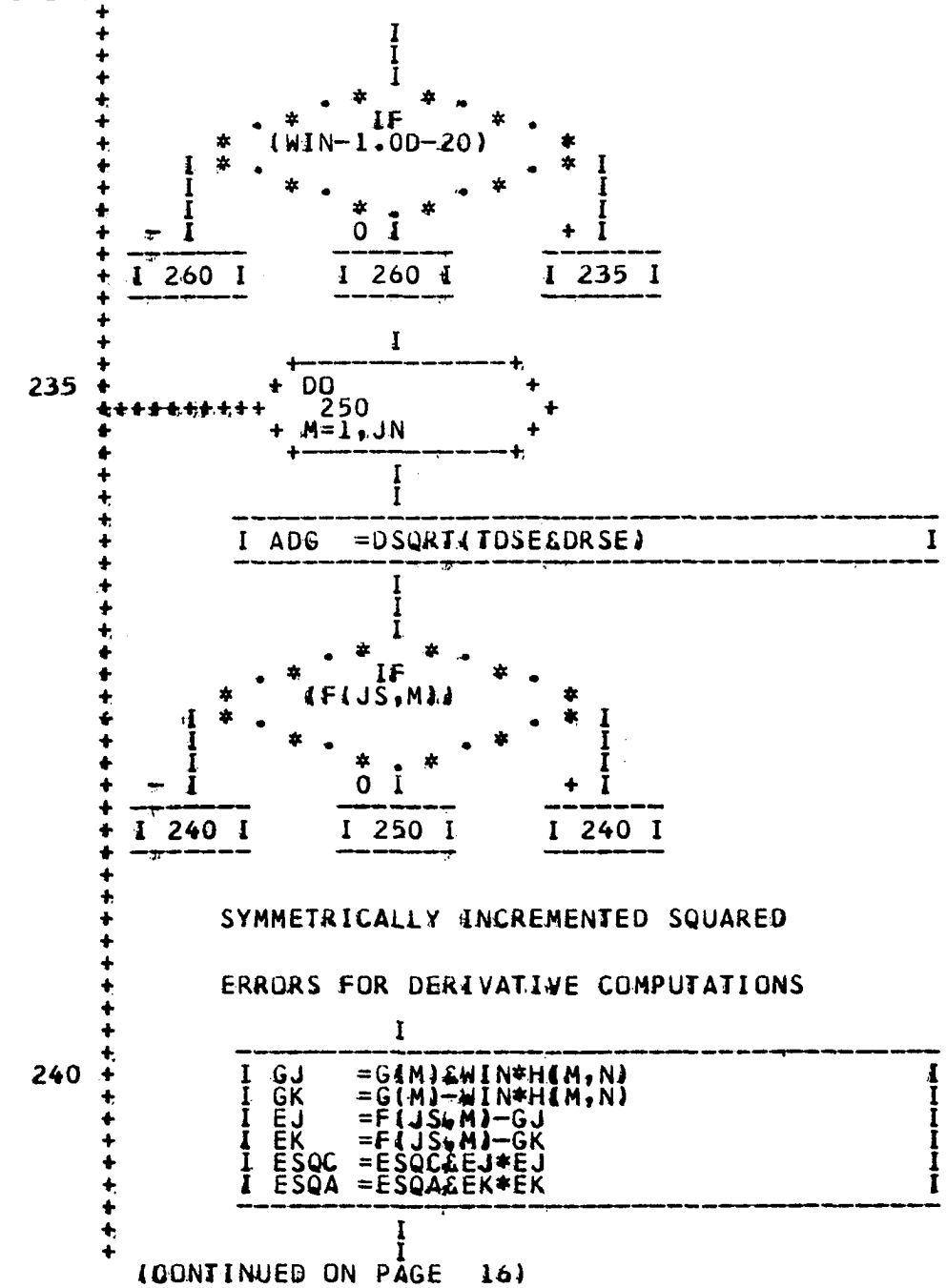

(CONTINUED ON PAGE 16)

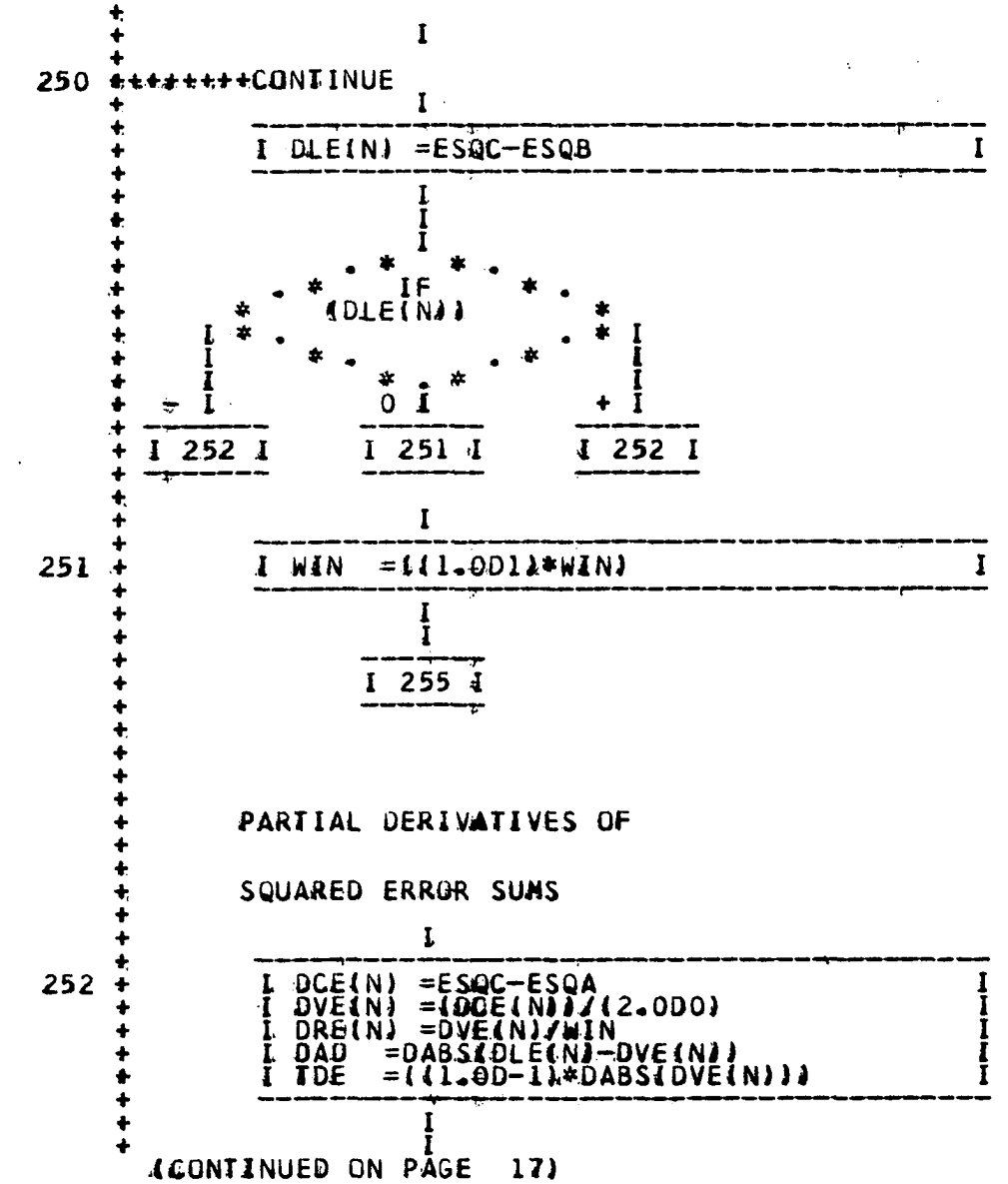

(CONTINUED ON PAGE 17)

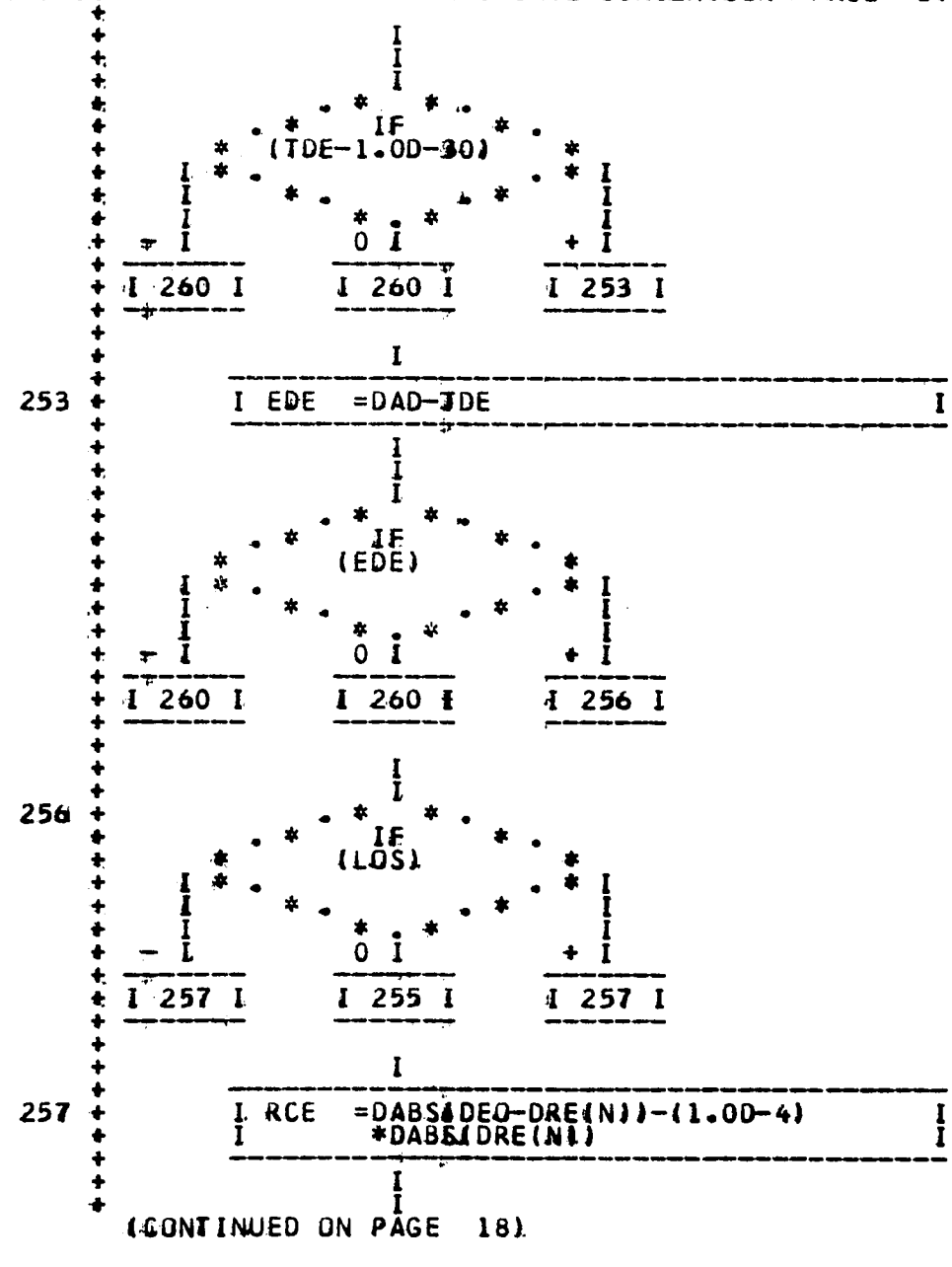

(CONTINUED ON PAGE 18)

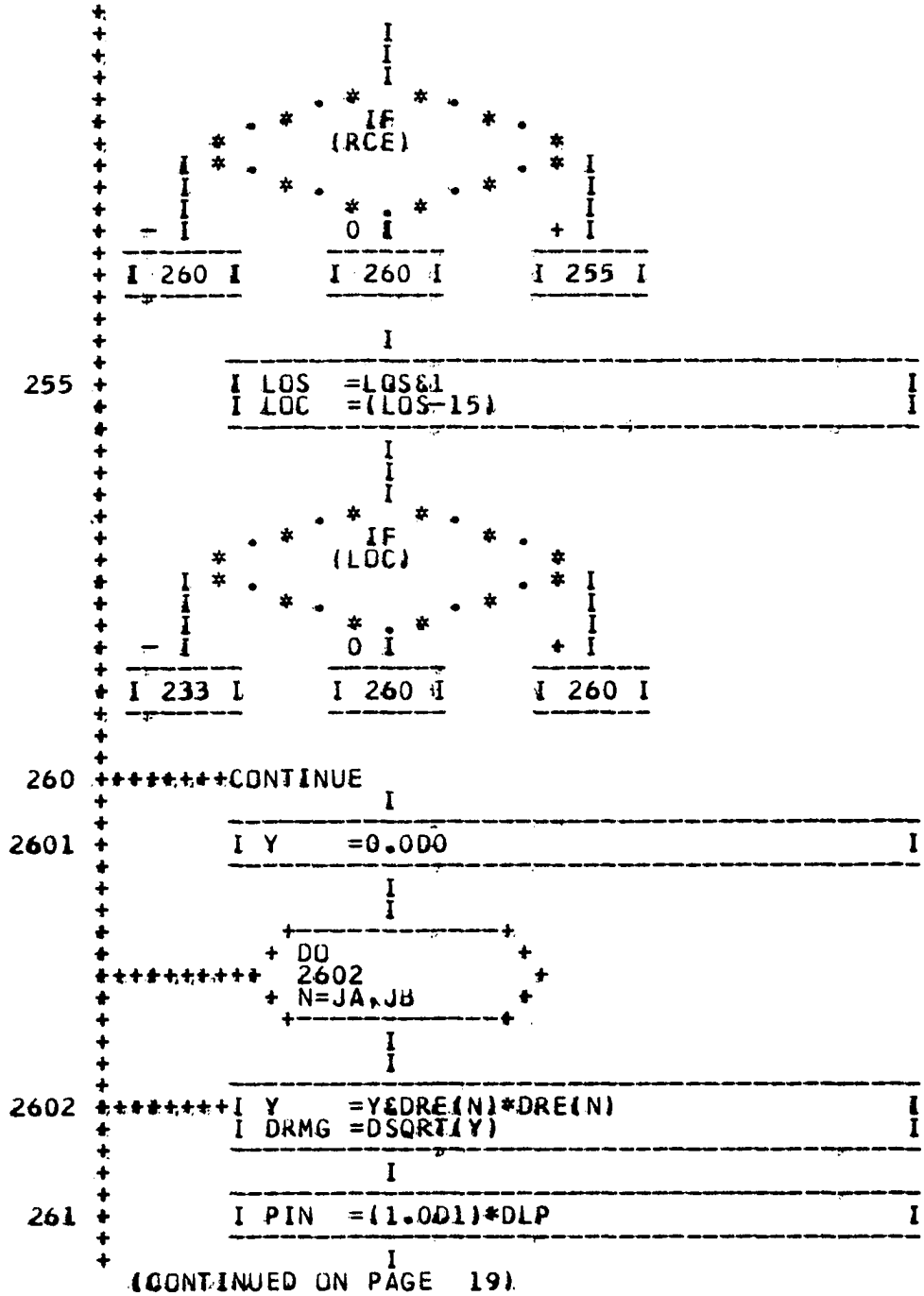

(CONTINUED ON PAGE 19)

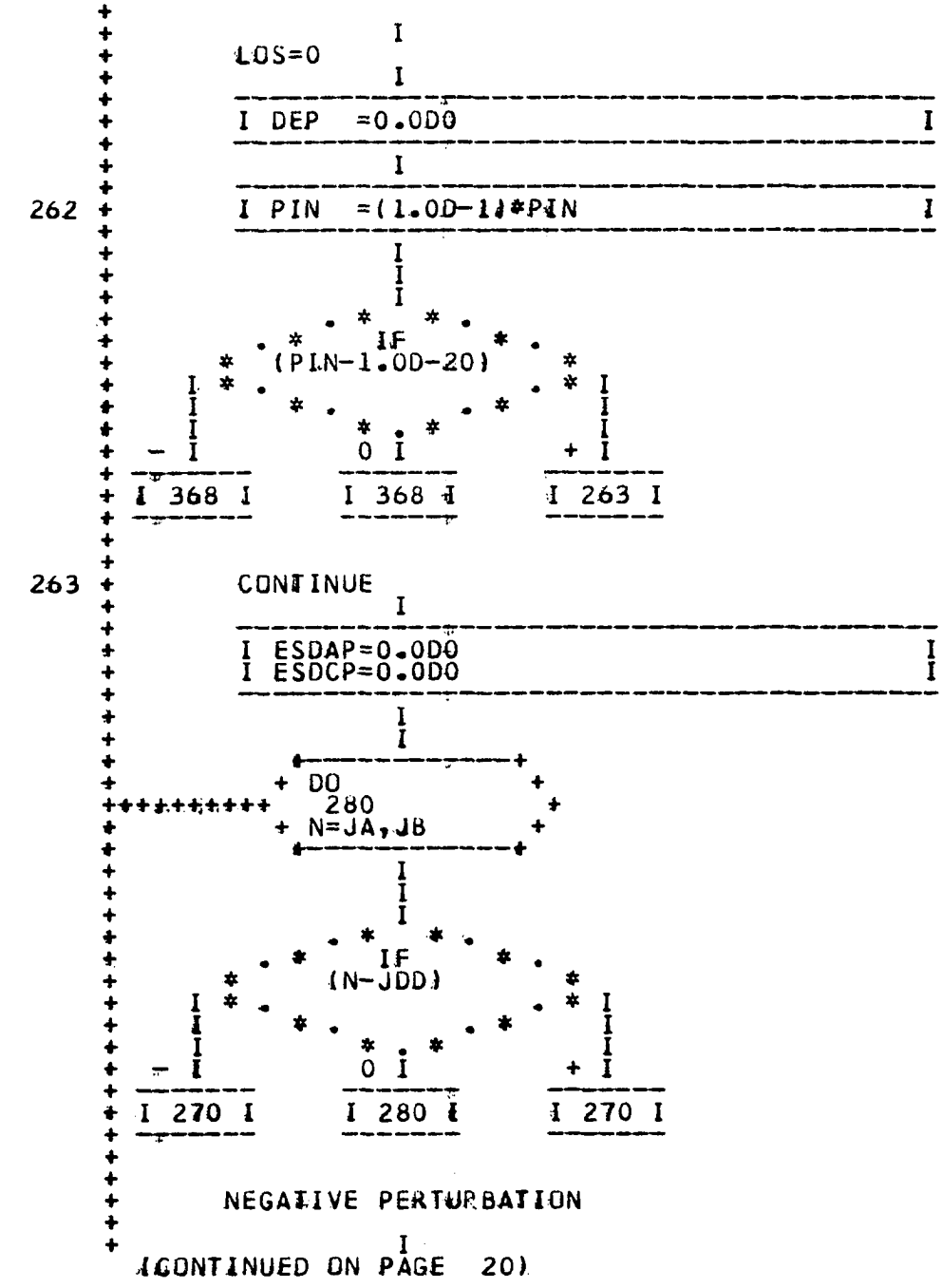

(CONTINUED ON PAGE 20)

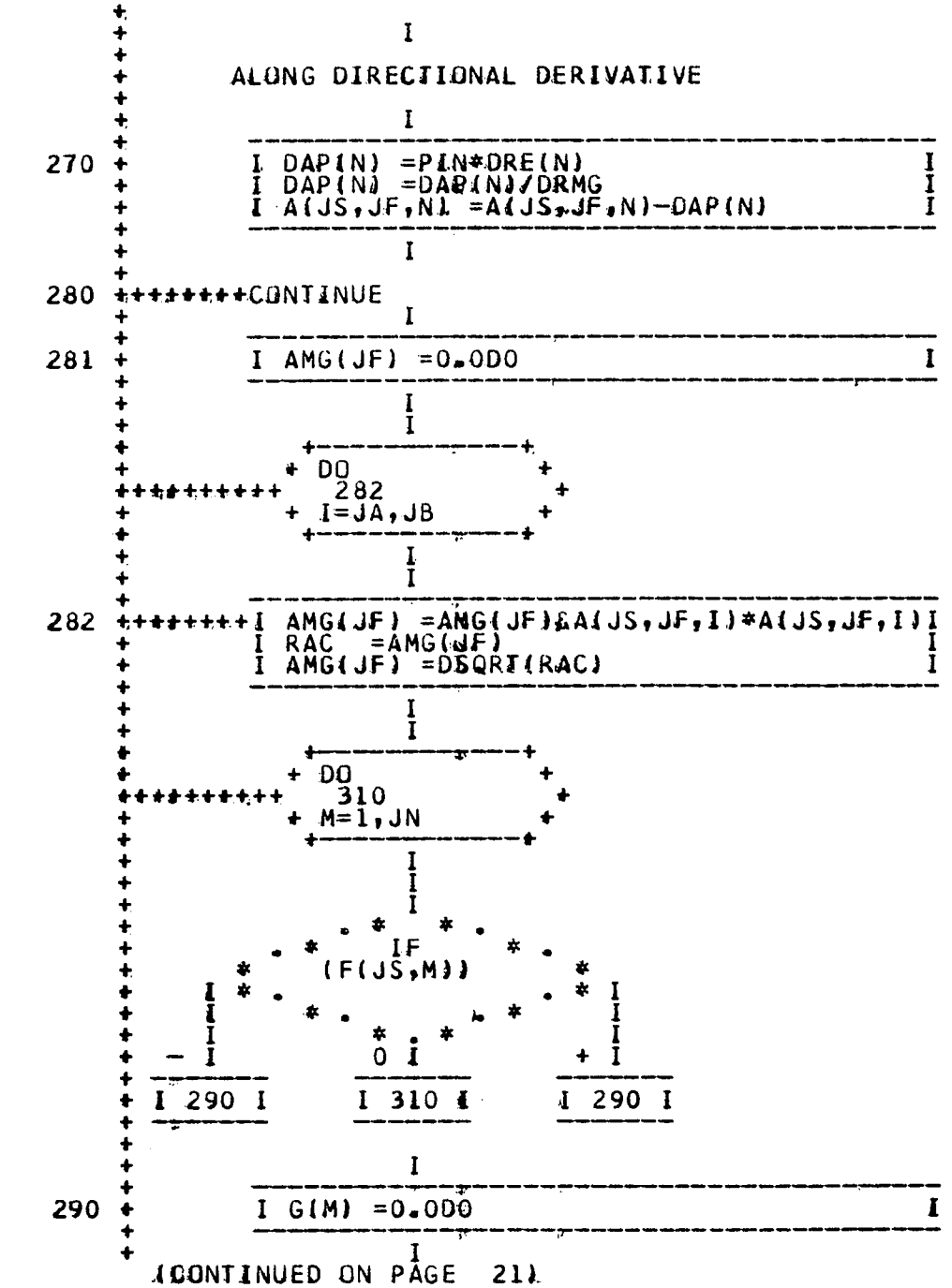

(CONTINUED ON PAGE 21)

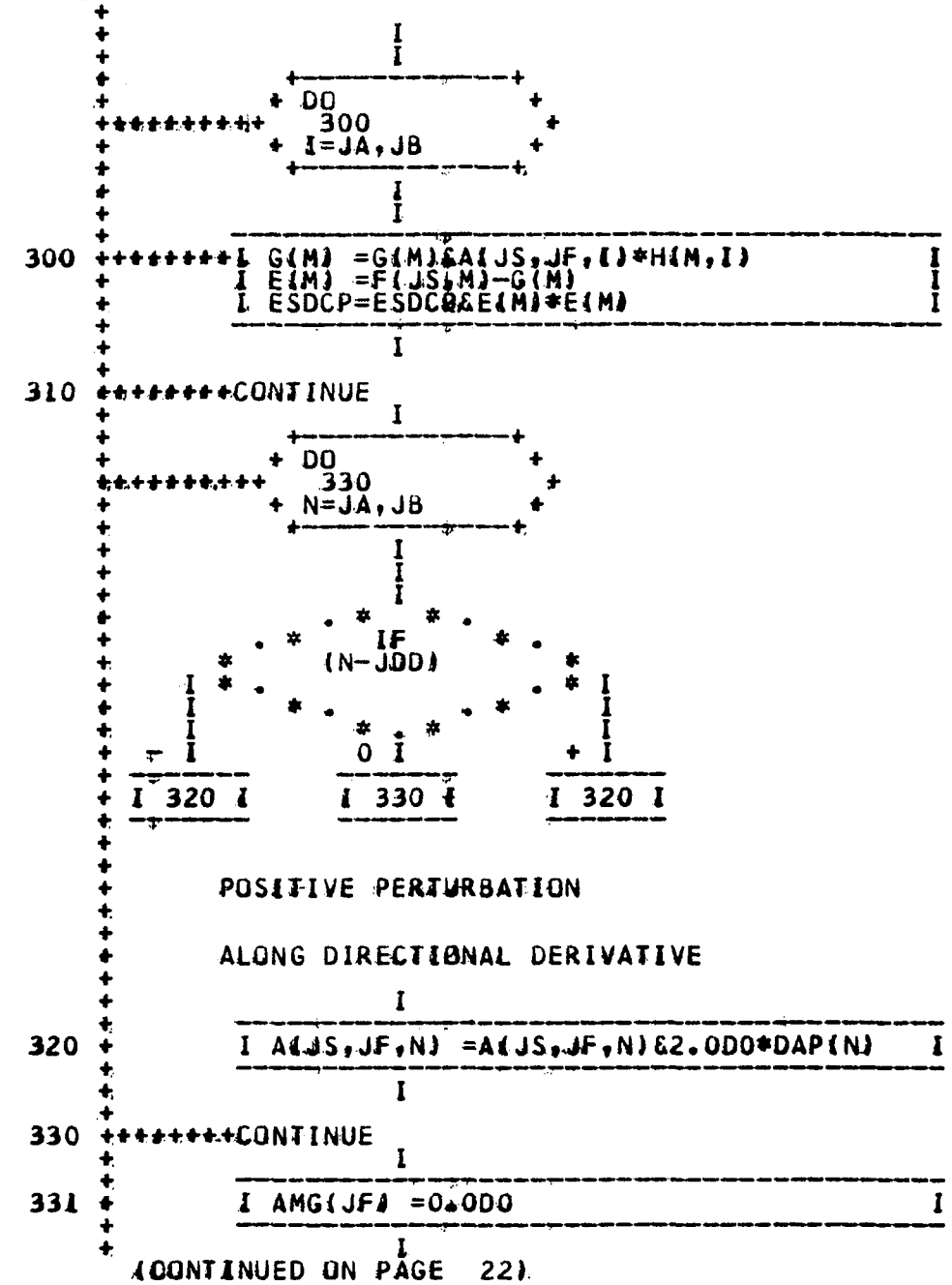

(CONTINUED ON PAGE 22)

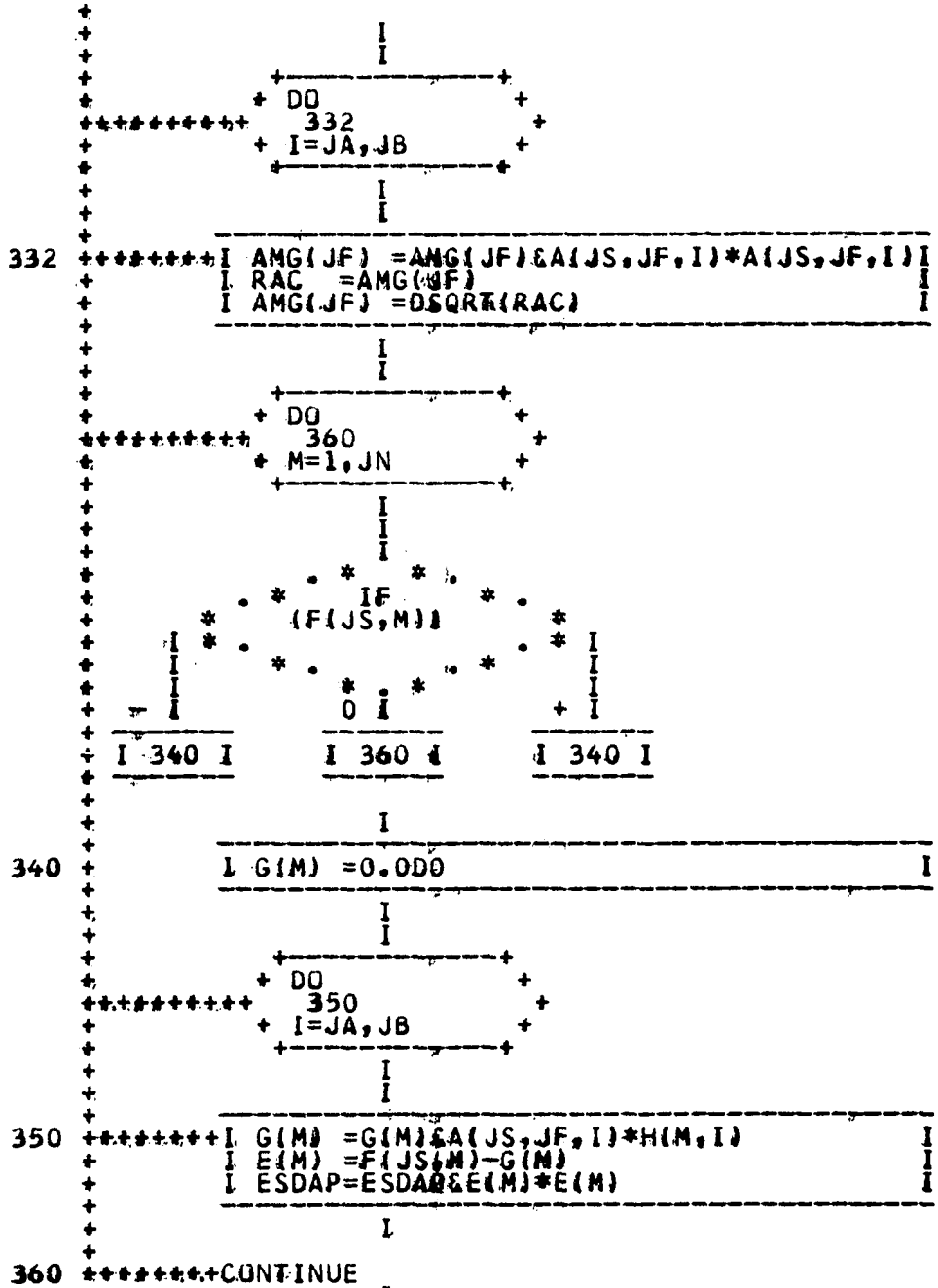

(CONTINUED ON PAGE 23)

```
GELISIMA PROGRAM FOR ROBBERS CAVE SIMULATION  PAGE  23
     +
     +                  I
     +
     +       VARIATIONS BOUNDED AWAY
     +
     +
     +       FROM REAL OR MACHINE ZERO
     +
     +                  I
     +        ---------------------------------------------
     +        I SDNJ =(ESDAP-ESQB)&(ESDCP-ESQB)          I
     +        ---------------------------------------------
     +                  I
     +                  I
     +                  I
     +              . *   * .
     +          . *    IF     * .
     +        *      (SDNJ)        *
     +     I * .                 . * I
     +     I      * .        . *     I
     +     I          * . *          I
     +   - I          0 I          + I
     +  -------      -------      -------
     +  I 361 I      I 3602I      I 361 I
     +  -------      -------      -------
     +
     +                  I
     +        ---------------------------------------------
3602 +        I PIN  =1.0D3*PIN                          I
     +        ---------------------------------------------
     +                  I
     +                  I
     +               -------
     +               I 3638I
     +               -------
     +
     +
     +
     +                  I
     +        ---------------------------------------------
 361 +        I DPI  =DABS(SDNJ)                         I
     +        I TEPI =((1.0D-1)*DABS(ESDAP-ESDCP))       I
     +        I DOP  =(ESDAP-ESDCP)/(2.0D0*PIN)          I
     +        ---------------------------------------------
     +                  I
     +                  I
```

(CONTINUED ON PAGE 24)

GELISIMA PROGRAM FOR ROBBERS CAVE SIMULATION PAGE 24

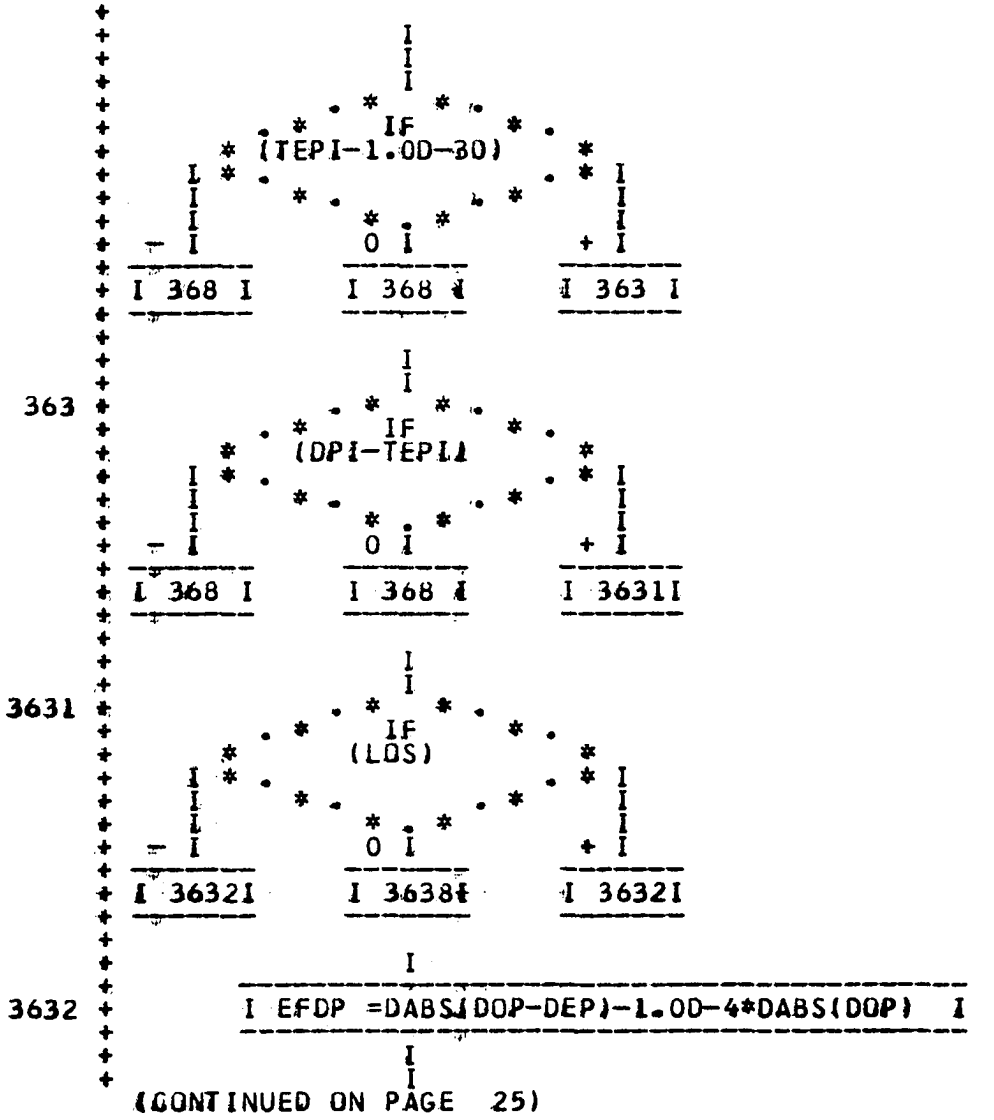

(CONTINUED ON PAGE 25)

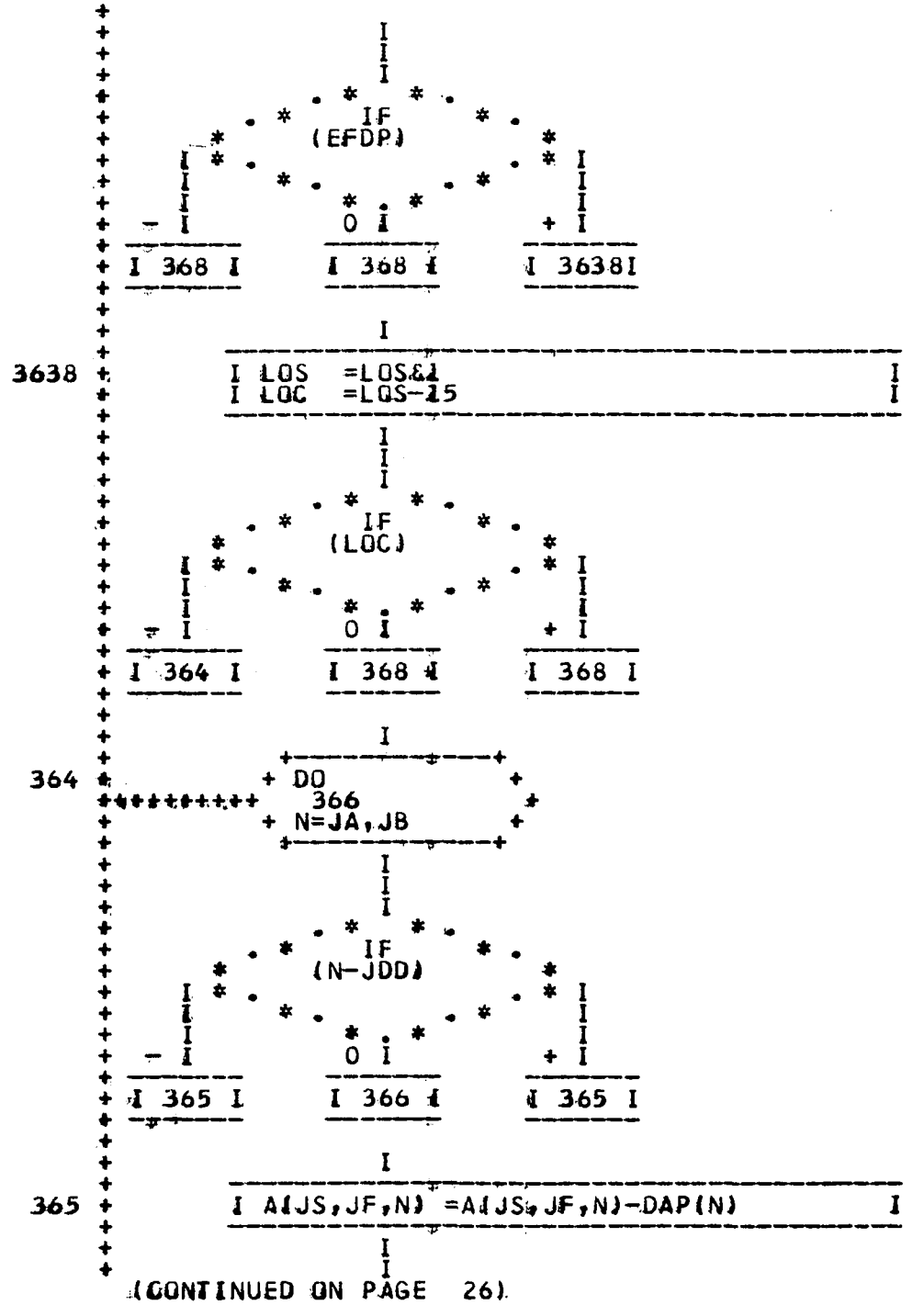

(CONTINUED ON PAGE 26)

```
GELISIMA PROGRAM FOR ROBBERS CAVE SIMULATION  PAGE  26
     +
     +                 I
     +
 366 +++++++++CONTINUE
     +                 I
     +        ------------------------------------------
     +        I DEP   =DOP                             I
     +        ------------------------------------------
     +                 I
     +                 I
     +              ------
 367 +              I 262 I
     +              ------
     +
     +
     +
     +
     +       COMPUTATION OF
     +
     +
     +       OPTIMUM ADAPTATION
     +
     +                 I
     +        ------------------------------------------
 368 +        I P     =PIN*(ESDAP-ESDCP)/((2.0D0)      I
     +        I        *SDNJ)                          I
     +        I Y     =DFLOAT(JN)                      I
     +        I RMS(IQ) =DSQRT(ESQB/Y)                 I
     +        I ADG   =-P                              I
     +        ------------------------------------------
     +                 I
     +
     +     ***WRITE (NPR,52) JDD,JS,JF
     +
     +     ***WRITE (NPR,53) IQ
     +
     +     ***WRITE (NPR,54) RMS(IQ)
     +
     +     ***WRITE (NPR,55) ADG
     +                 I
     +        ------------------------------------------
     +        I P     =P&PIN                           I
     +        ------------------------------------------
     +                 I
     +                 I
     +            +-----------+
     +           + DO          +
     +++++++++++   380          +
     +           + N=JA,JB     +
     +            +-----------+
     +                 I
     +                 I
```

(CONTINUED ON PAGE 27)

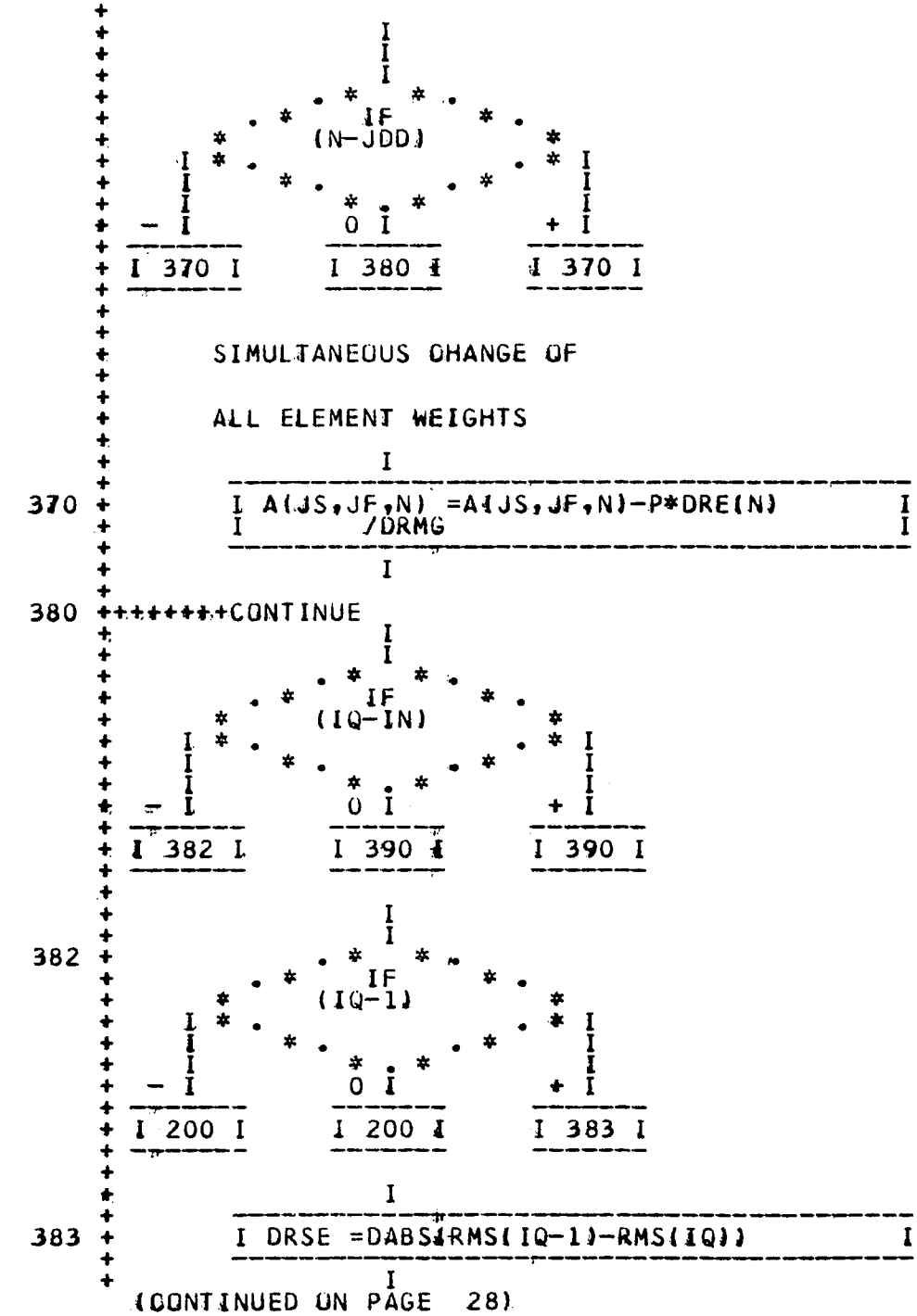

(CONTINUED ON PAGE 28)

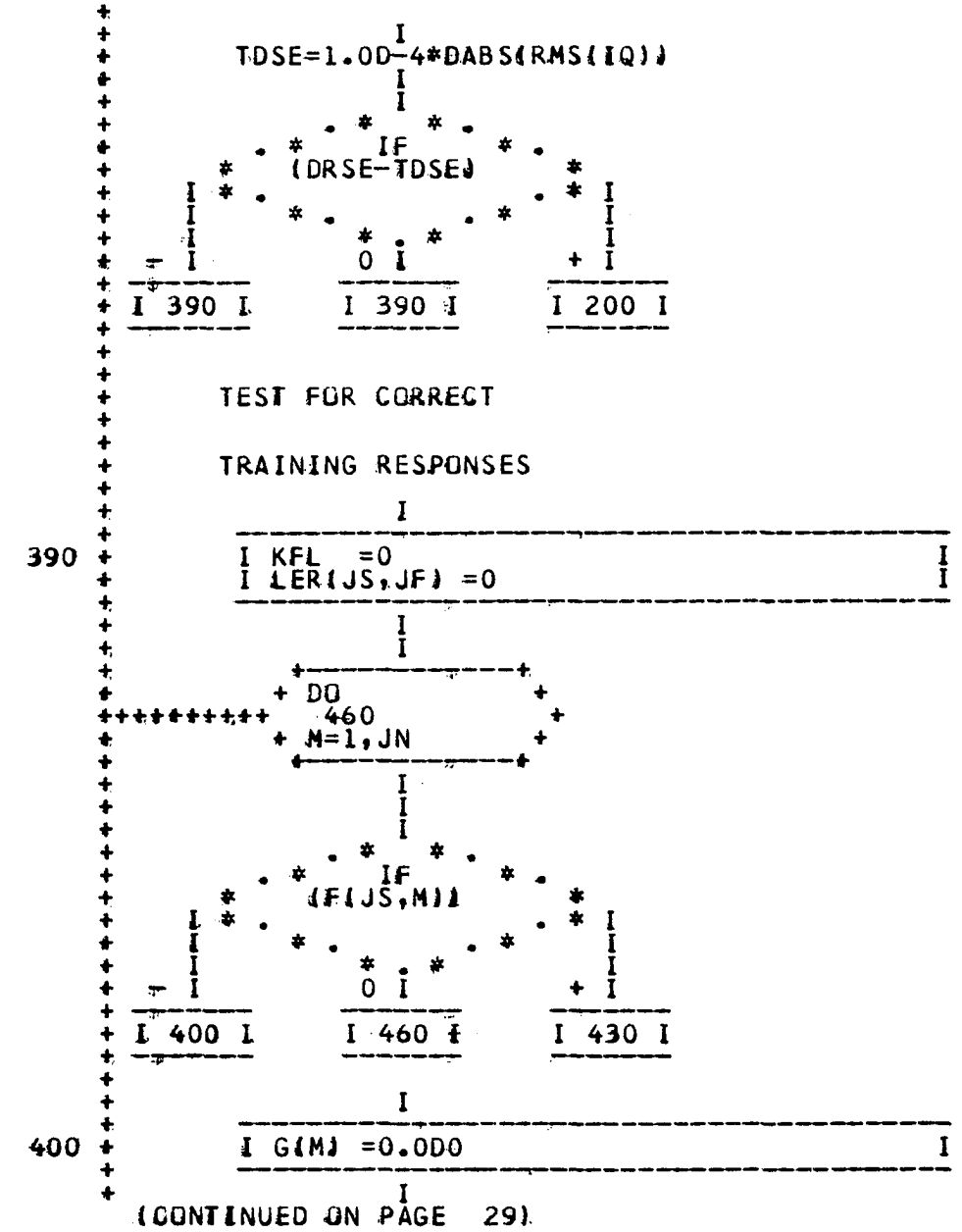

(CONTINUED ON PAGE 29)

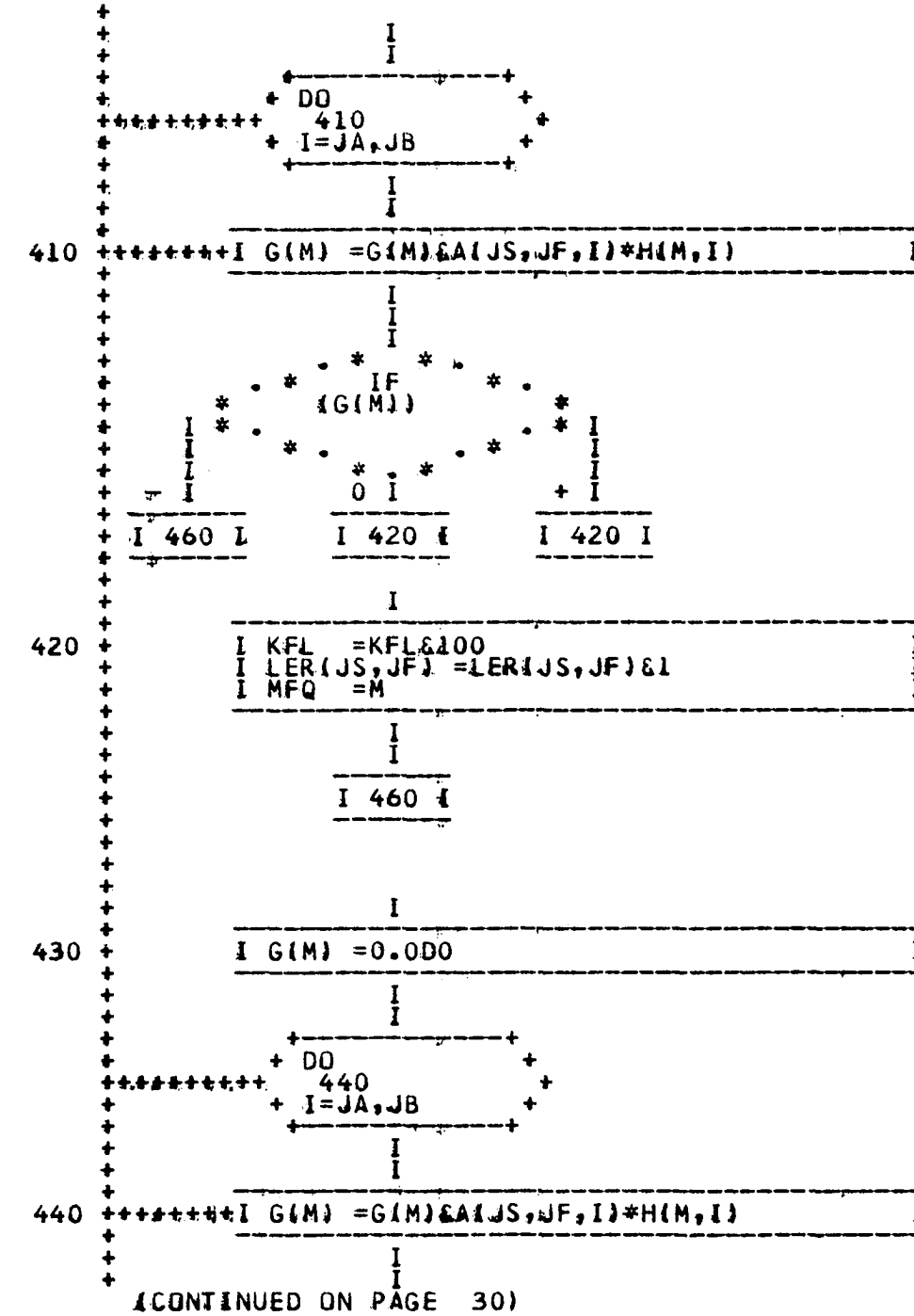

(CONTINUED ON PAGE 30)

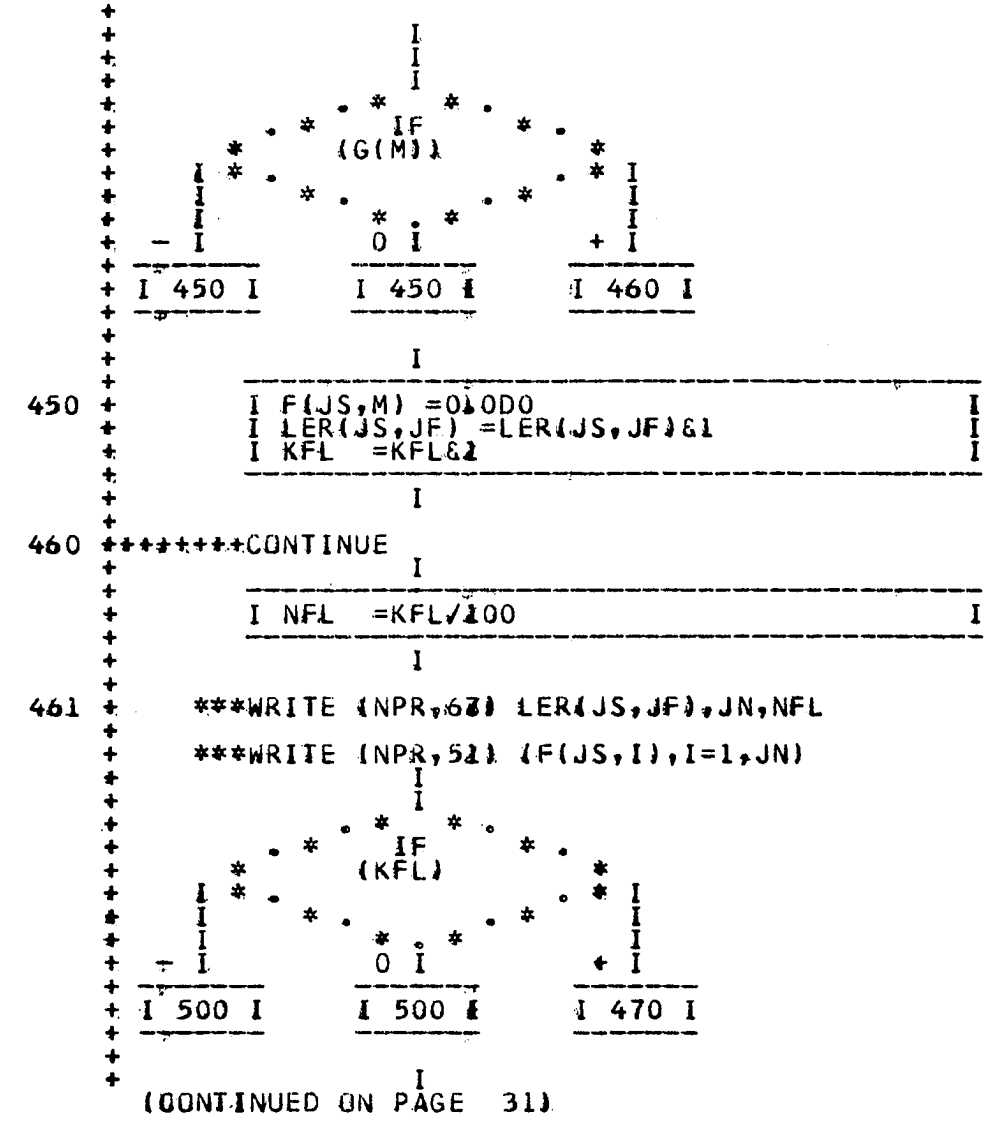

(CONTINUED ON PAGE 31)

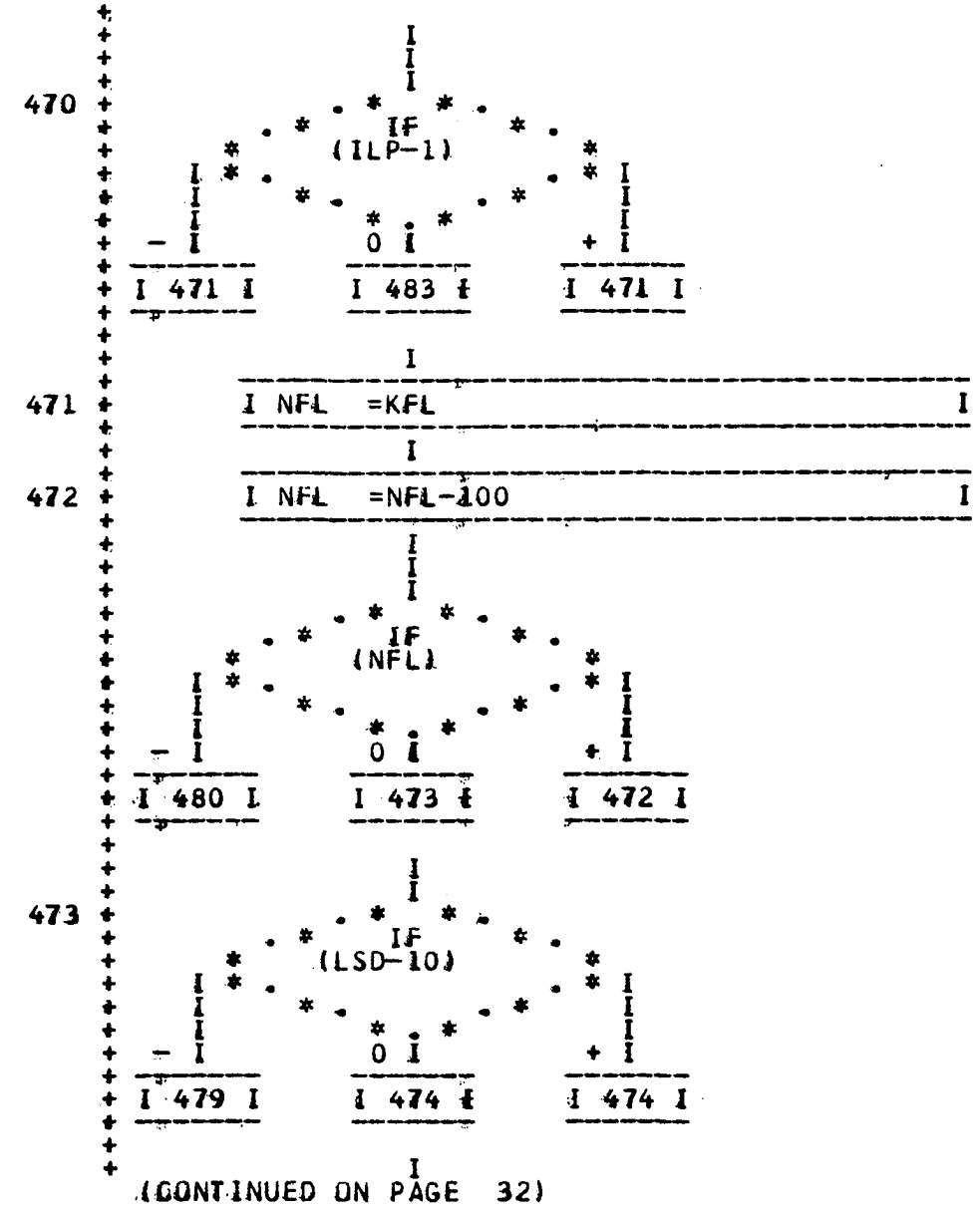

(CONTINUED ON PAGE 32)

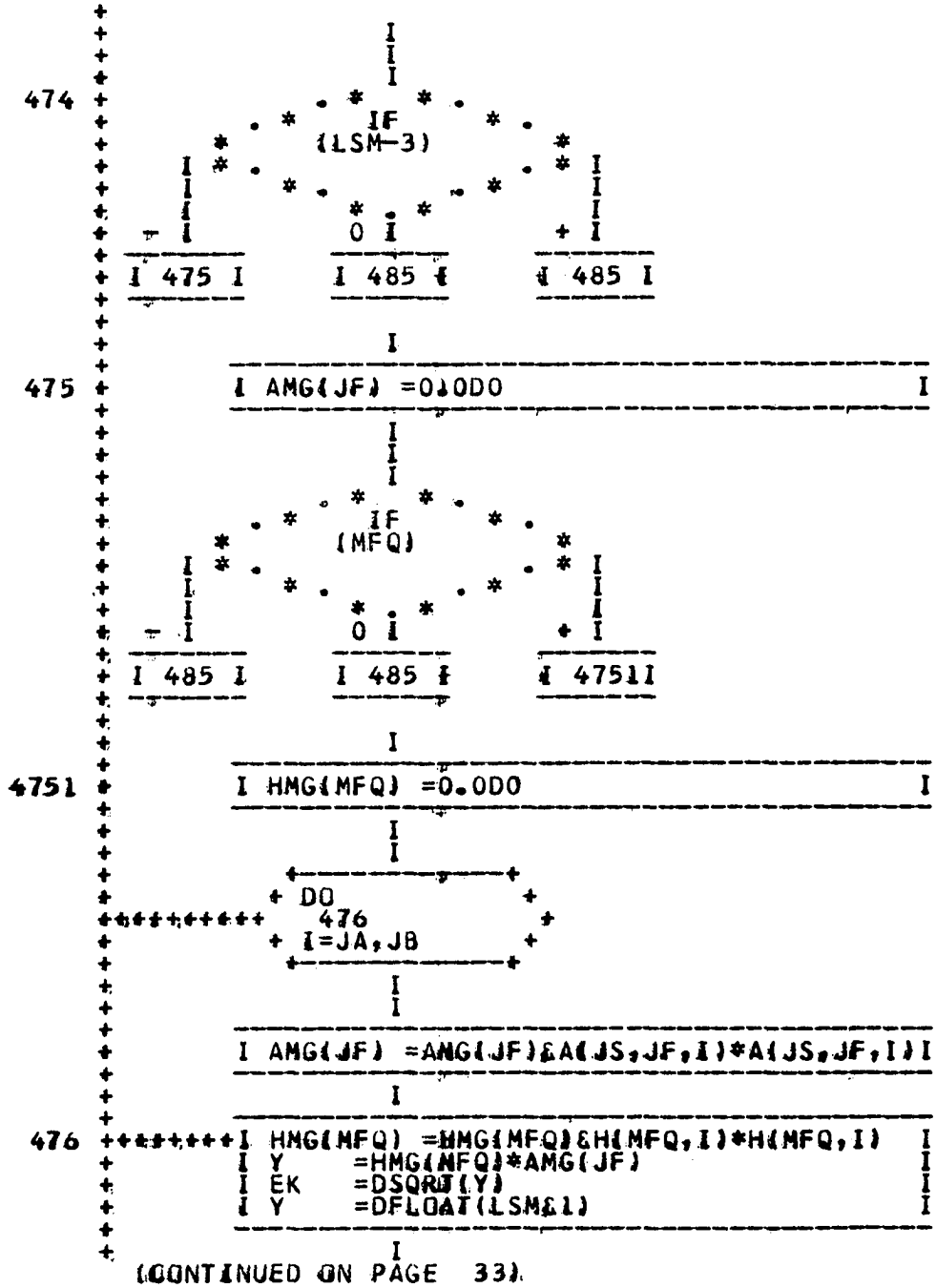

(CONTINUED ON PAGE 33)

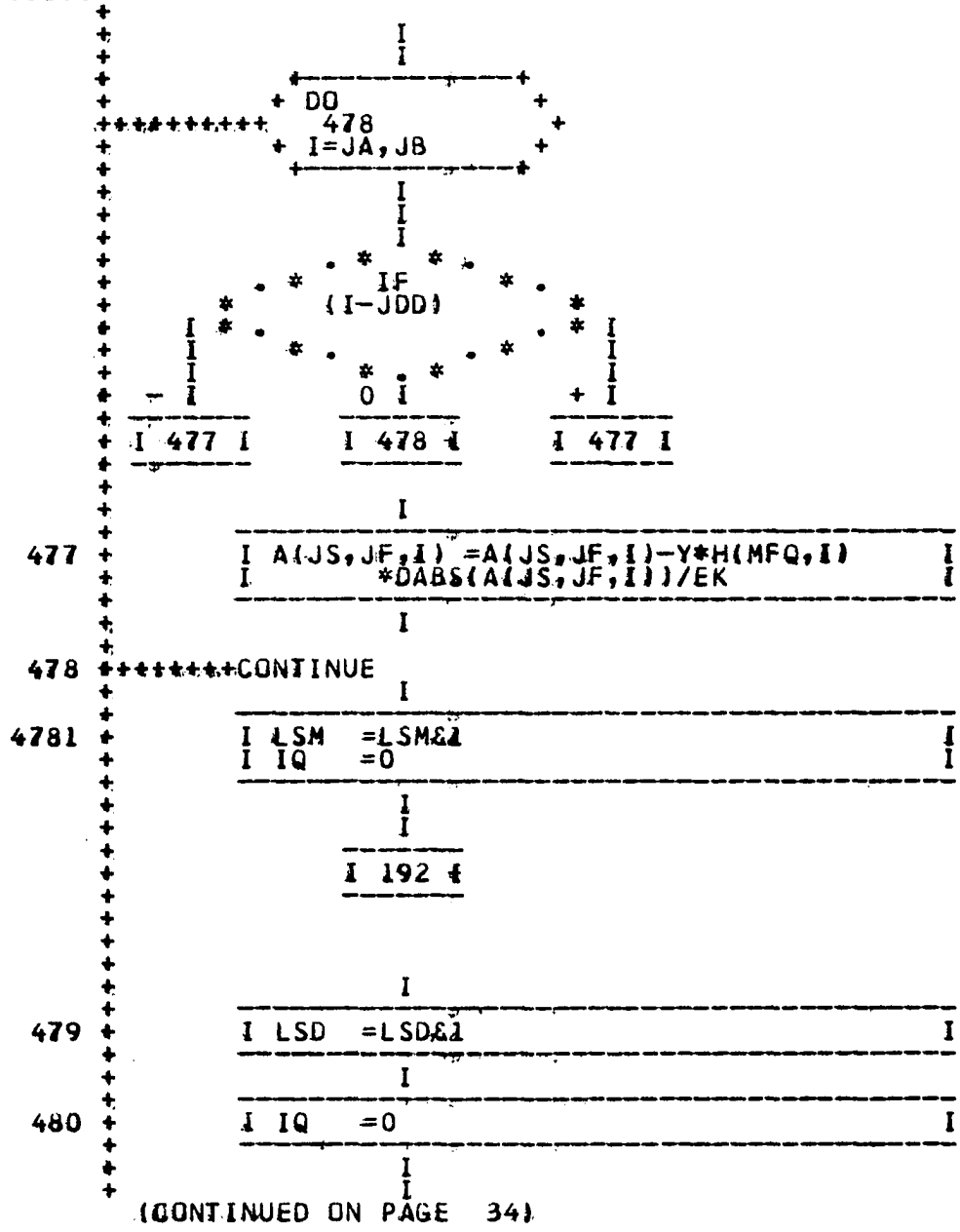

(CONTINUED ON PAGE 34)

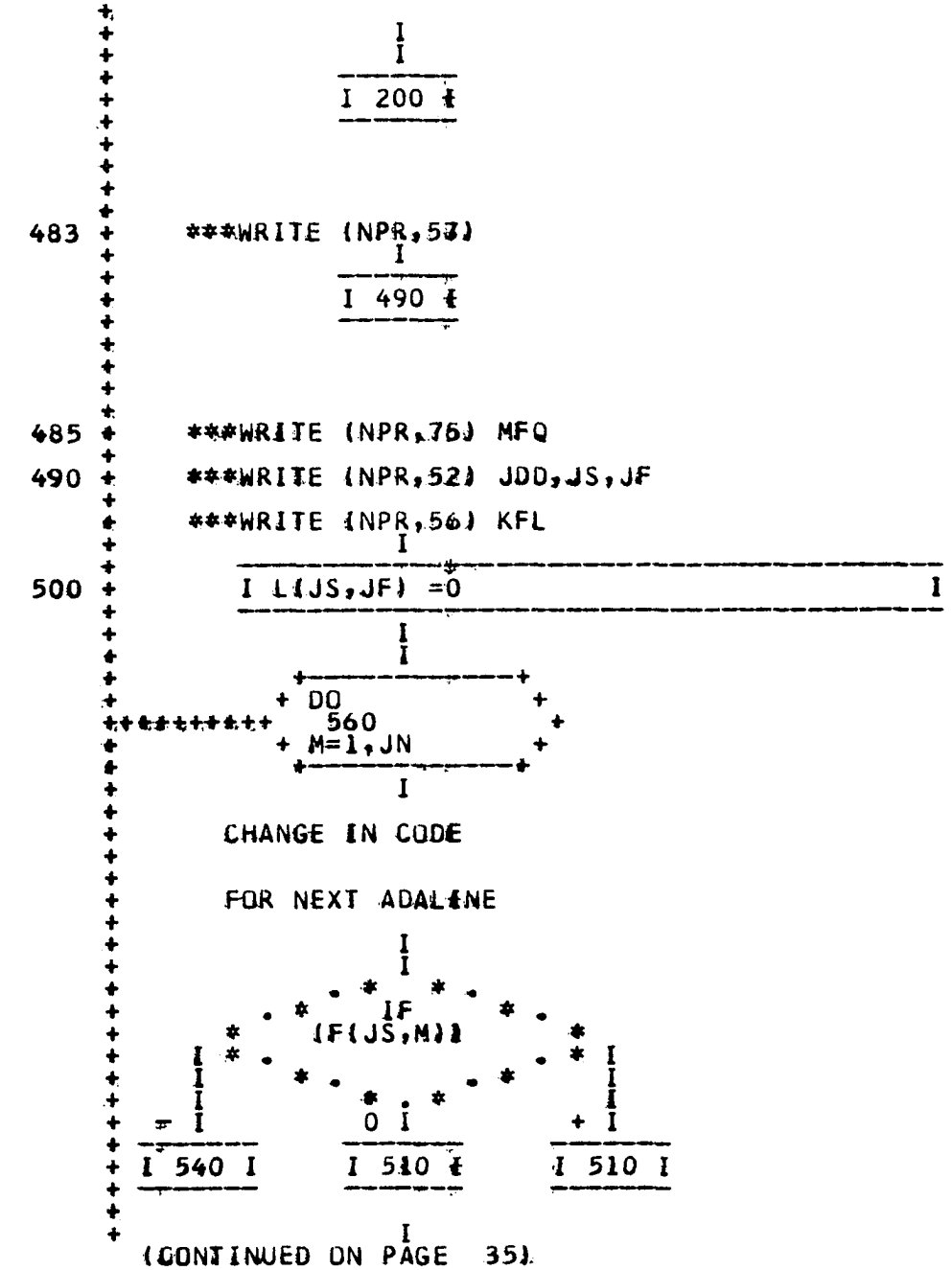

(CONTINUED ON PAGE 35)

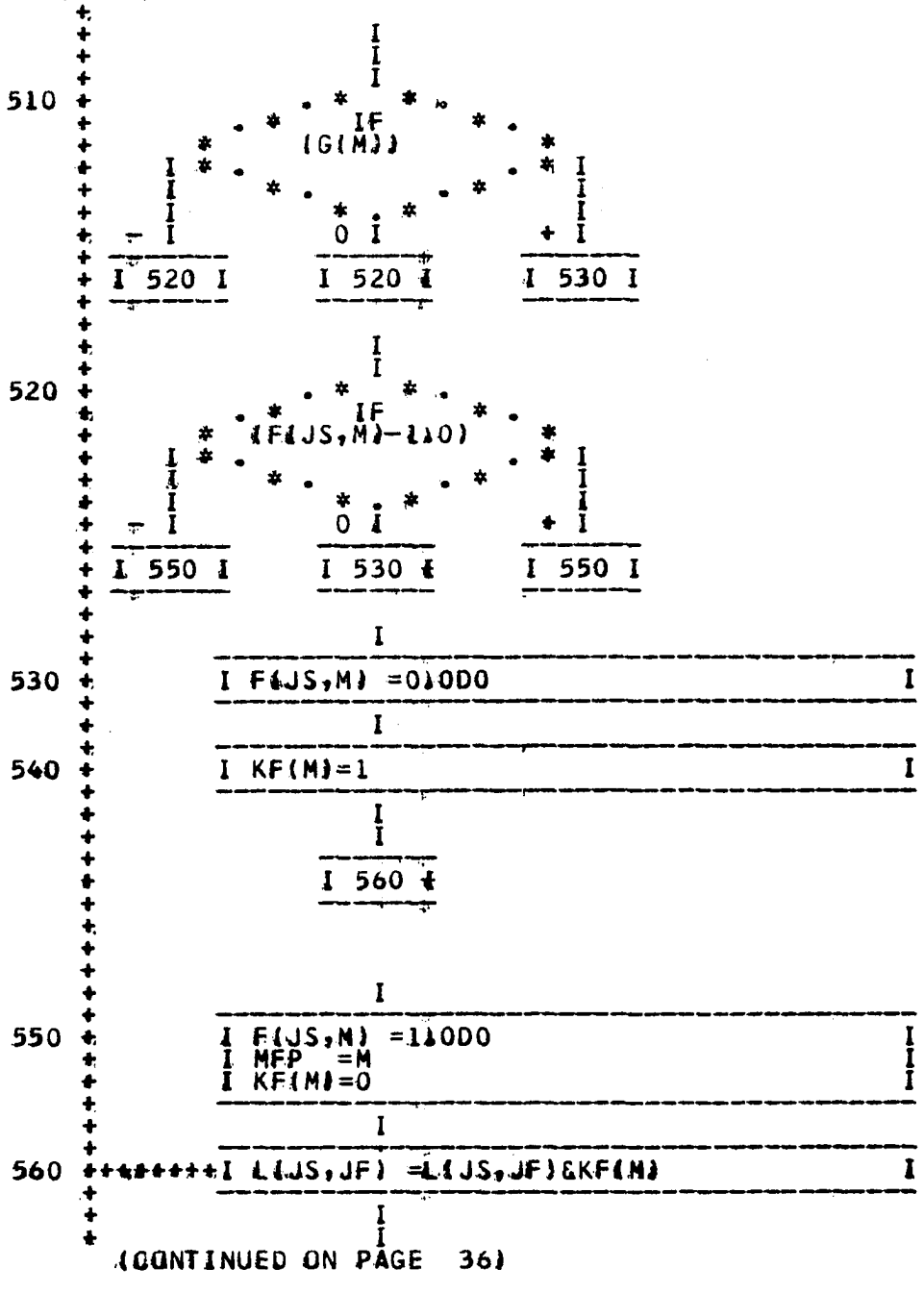

(CONTINUED ON PAGE 36)

```
GELISIMA PROGRAM FOR ROBBERS CAVE SIMULATION  PAGE  36
     +
     +                 I
     +
     +    ***WRITE (NPR,52) JDD,JS,JF
     +
     +    ***WRITE (NPR,51) (A(JS,JF,N),N=1,JB)
     +                 I
     +       ------------------------------------------
     +       I KIC  =JN-L(JS,JF)                      I
     +       ------------------------------------------
     +                 I
     +                 I
     +                 I
     +             . *   * .
     +         . *    IF     * .
     +       *      (KIC)        *
     +    I * .                . * I
     +    I     * .        . *     I
     +    I         * . *         I
     +  - I         0 I         + I
     +  -------     -------     -------
     +  I 590 I     I 590 I     I 570 I
     +  -------     -------     -------
     +
     +                 I
     +                 I
 570 +             . *   * .
     +         . *    IF     * .
     +       *    (JF-ILP)       *
     +    I * .                . * I
     +    I     * .        . *     I
     +    I         * . *         I
     +  - I         0 I         + I
     +  -------     -------     -------
     +  I 571 I     I 585 I     I 585 I
     +  -------     -------     -------
     +
     +                 I
     +                 I
 571 +             . *   * .
     +         . *    IF     * .
     +       *     (JF-1)        *
     +    I * .                . * I
     +    I     * .        . *     I
     +    I         * . *         I
     +  - I         0 I         + I
     +  -------     -------     -------
     +  I 580 I     I 580 I     I 572 I
     +  -------     -------     -------
     +
     +
     +       MEMORY USED TO AVOID
     +
     +                 I
```

(CONTINUED ON PAGE 37)

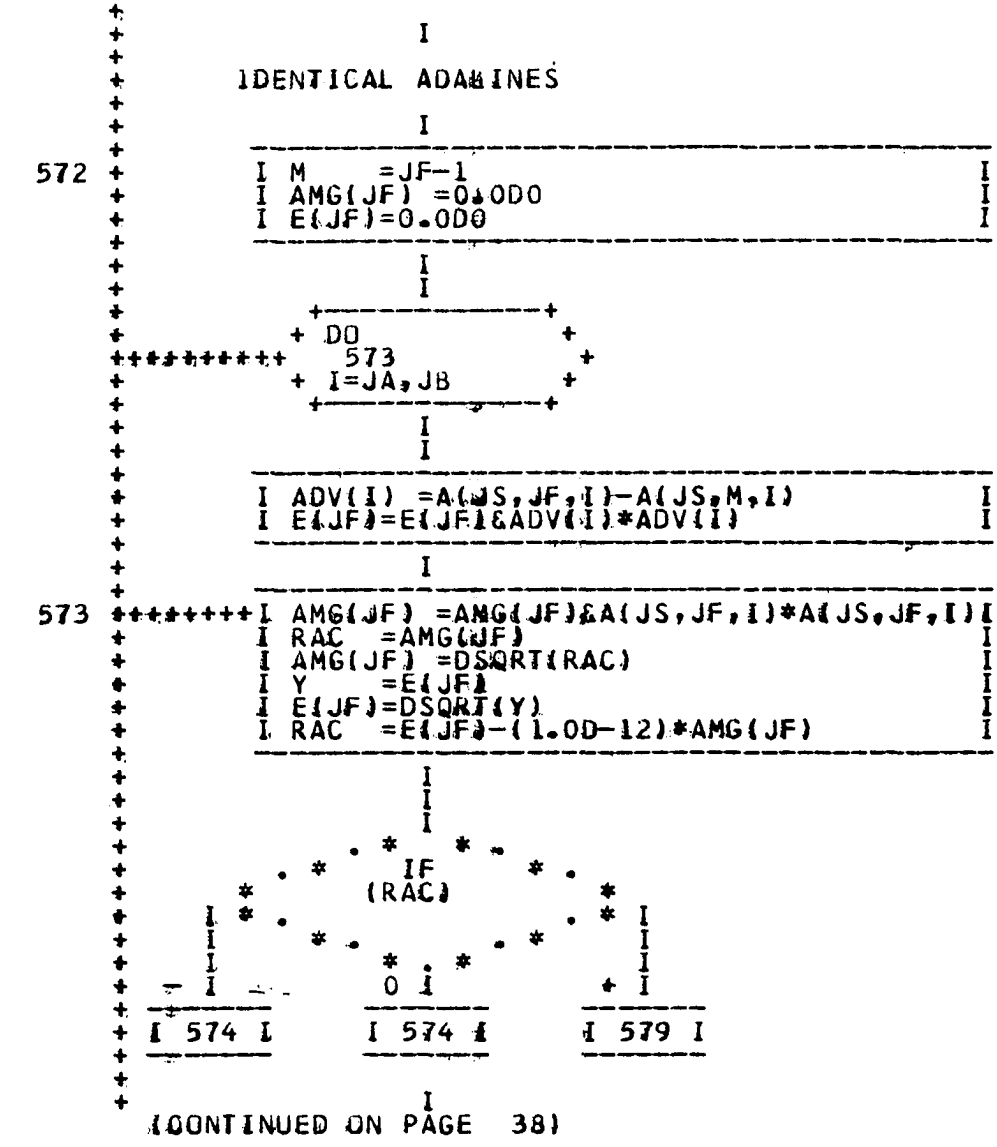

(CONTINUED ON PAGE 38)

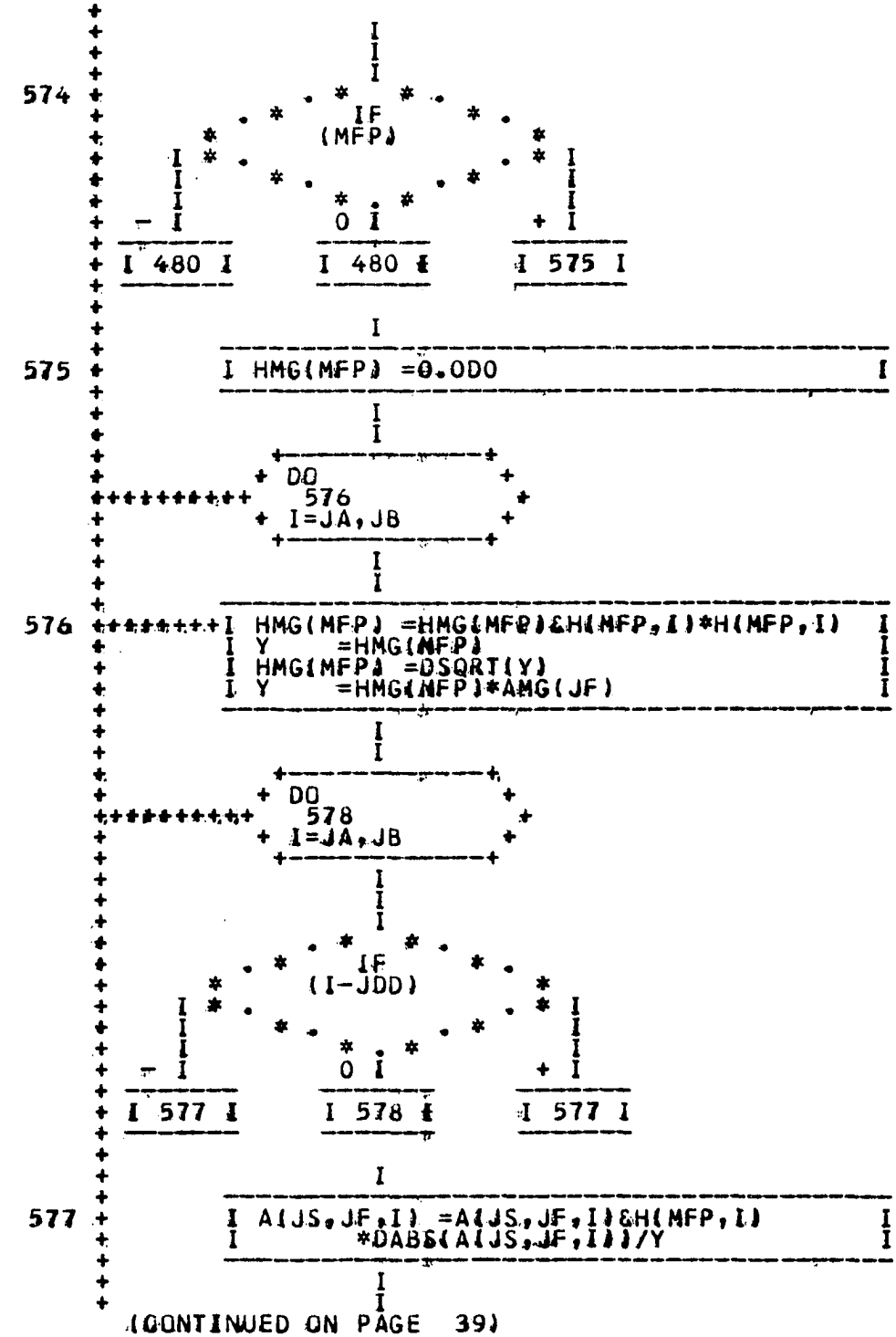

(CONTINUED ON PAGE 39)

```
GELISIMA PROGRAM FOR ROBBERS CAVE SIMULATION  PAGE  39
     +
     +                 I
     +
 578 +++++++++CONTINUE
     +
     +     ***WRITE (NPR,71)
     +
     +     ***WRITE (NPR,52) JDD,JS,JF
     +
     +     ***WRITE (NPR,52) (A(JS,JF,M),M=1,JB)
     +                 I
     +        ------------------------------------------
     +        I IQ   =0                                I
     +        ------------------------------------------
     +                 I
     +                 I
     +              -------
     +              I 200 I
     +              -------
     +
     +
     +
     +
 579 +     ***WRITE (NPR,72) RAC,AMG(JF)
     +
 580 +     ***WRITE (NPR,52) JDD,JS,JF
     +
     +     ***WRITE (NPR,59) (KF(M),M=1,JN)
     +
     +     ***WRITE (NPR,60)
     +                 I
     +        ------------------------------------------
     +        I JF   =JF&I                             I
     +        I IQ   =0                                I
     +        ------------------------------------------
     +                 I
     +                 I
     +              -------
     +              I 200 I
     +              -------
     +
     +
     +
     +                 I
     +                 I
 585 +            . *   * .
     +        . *    IF     * .
     +      *    (KFL-100)      *
     +    I * .                . * I
     +    I     * .        . *     I
     +    I         * . *          I
     +  - I         0 I          + I
     +  -------     -------      -------
     +  I 587 I     I 586 I      I 586 I
     +  -------     -------      -------
     +
     +                 I
```

(CONTINUED ON PAGE 40)

GELISIMA PROGRAM FOR ROBBERS CAVE SIMULATION PAGE 40

```
     +                    I
     +
 586 +     ***WRITE (NPR,78)
     +                    I
     +                 ------
     +                 I 590 I
     +                 ------
     +
     +
     +
     +
 587 +     ***WRITE (NPR,77) KFL
     +
 590 +     ***WRITE (NPR,52) JDD,JS,JF
     +
     +     ***WRITE (NPR,61) KIC
     +
 591 +     ***WRITE (NPR,66) (F(JS,I),I=1,JN)
     +                    I
     +          ------------------------------------------
 592 +          I JFF(JS) =JF                            I
     +          ------------------------------------------
     +                    I
     +                    I
     +                    I
     +                 . *   * .
     +            . *    IF     * .
     +          *    (JS-JSF)       *
     +       I * .                 . * I
     +       I     * .         . *     I
     +       I         * . *           I
     +     - I         0 I           + I
     +   -------      -------      -------
     +   I 593 I      I 594 I      I 594 I
     +   -------      -------      -------
     +
     +                    I
     +                    I
 593 +                 . *   * .
     +            . *    IF     * .
     +          *    (DFF(JS))      *
     +       I * .                 . * I
     +       I     * .         . *     I
     +       I         * . *           I
     +     - I         0 I           + I
     +   -------      -------      -------
     +   I 600 I      I 596 I      I 600 I
     +   -------      -------      -------
     +
     +
     +          MEMORY IMPLEMENTATION
     +
     +
     +          FOR CODE REDUNDANCIES
     +
     +                    I
     +          ------------------------------------------
 594 +          I NFL  =JSF-1                            I
     +          ------------------------------------------
     +                    I
```

(CONTINUED ON PAGE 41)

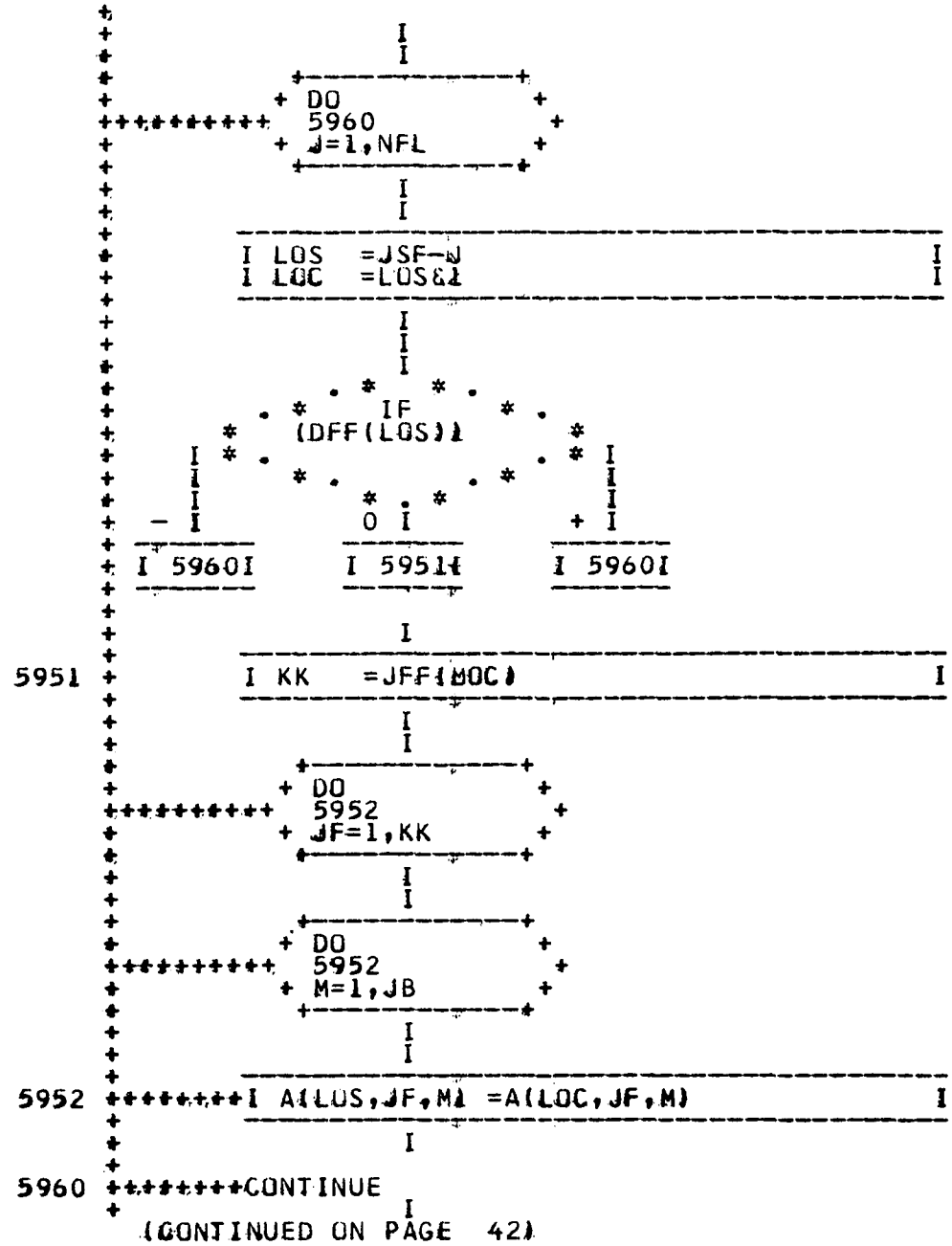

(CONTINUED ON PAGE 42)

```
     +
     +                  I
     +                  I
     +              -------
     +              I 601 I
     +              -------
     +
     +
     +
     +                  I
     +            +-------------+
 596 +          + DO            +
     ++++++++++   597            +
     +          + JF=1,ILP      +
     +            +-------------+
     +                  I
     +                  I
     +            +-------------+
     +          + DO            +
     ++++++++++   597            +
     +          + M=1,JB        +
     +            +-------------+
     +                  I
     +                  I
     +        ------------------------------------------------
 597 +++++++++I A(JZ,JF,M) =A(JS,JF,M)                        I
     +        ------------------------------------------------
     +                  I
     +        ------------------------------------------------
 600 +        I JS    =JS&1                                   I
     +        ------------------------------------------------
     +                  I
     +                  I
     +              -------
     +              I 182 I
     +              -------
     +
     +
     +
     +
 601 +     ***WRITE (NPR,58)
     +                  I
     +            +-------------+
     +          + DO            +
     ++++++++++   6010           +
     +          + JS=1,JSF      +
     +            +-------------+
     +                  I
     +                  I
     +        ------------------------------------------------
     +        I KK    =JFF(JS)                                I
     +        ------------------------------------------------
     +                  I
     +
6010 ++++++++WRITE (NPR,9) (LER(JS,JF),JF=1,KK)
     +
 602 +     ***WRITE (NPR,69)
     +                  I
```

(CONTINUED ON PAGE 43)

```
GELISIMA PROGRAM FOR ROBBERS CAVE SIMULATION  PAGE  43
     +
     +                  I
     +                  I
     +            +-------------+
     +           + DO            +
     ++++++++++    605            +
     +           + JS=1,JSF      +
     +            +-------------+
     +                  I
     +                  I
     +        ---------------------------------------------
     +        I KK    =JFF(JS)                            I
     +        ---------------------------------------------
     +                  I
     +
     +       READOUT FINAL WEIGHTS
     +
     +
     +       AND PERFORMANCE
     +
     +
 605 ++++++***WRITE (NPR,9) (L(JS,JF),JF=1,KK)
     +
 610 +     ***WRITE (NPR,62)
     +
     +     ***WRITE (NPU,5) JSF
     +
     +     ***WRITE (NPU,6) (JFF(JS),JS=1,JSF)
     +                  I
     +            +-------------+
     +           + DO            +
     ++++++++++    620            +
     +           + JS=1,JSF      +
     +            +-------------+
     +                  I
     +                  I
     +        ---------------------------------------------
     +        I I     =JFF(JS)                            I
     +        ---------------------------------------------
     +                  I
     +                  I
     +            +-------------+
     +           + DO            +
     ++++++++++    620            +
     +           + JF=1,I        +
     +            +-------------+
     +                  I
     +
     +     ***WRITE (NPR,50) JDD,JS,JF
     +
     +     ***WRITE (NPR,51) (A(JS,JF,M),M=1,JB)
     +
 620 ++++++***WRITE (NPU,3) (A(JS,JF,M),M=1,JB)
     +                  I
```

(CONTINUED ON PAGE 44)

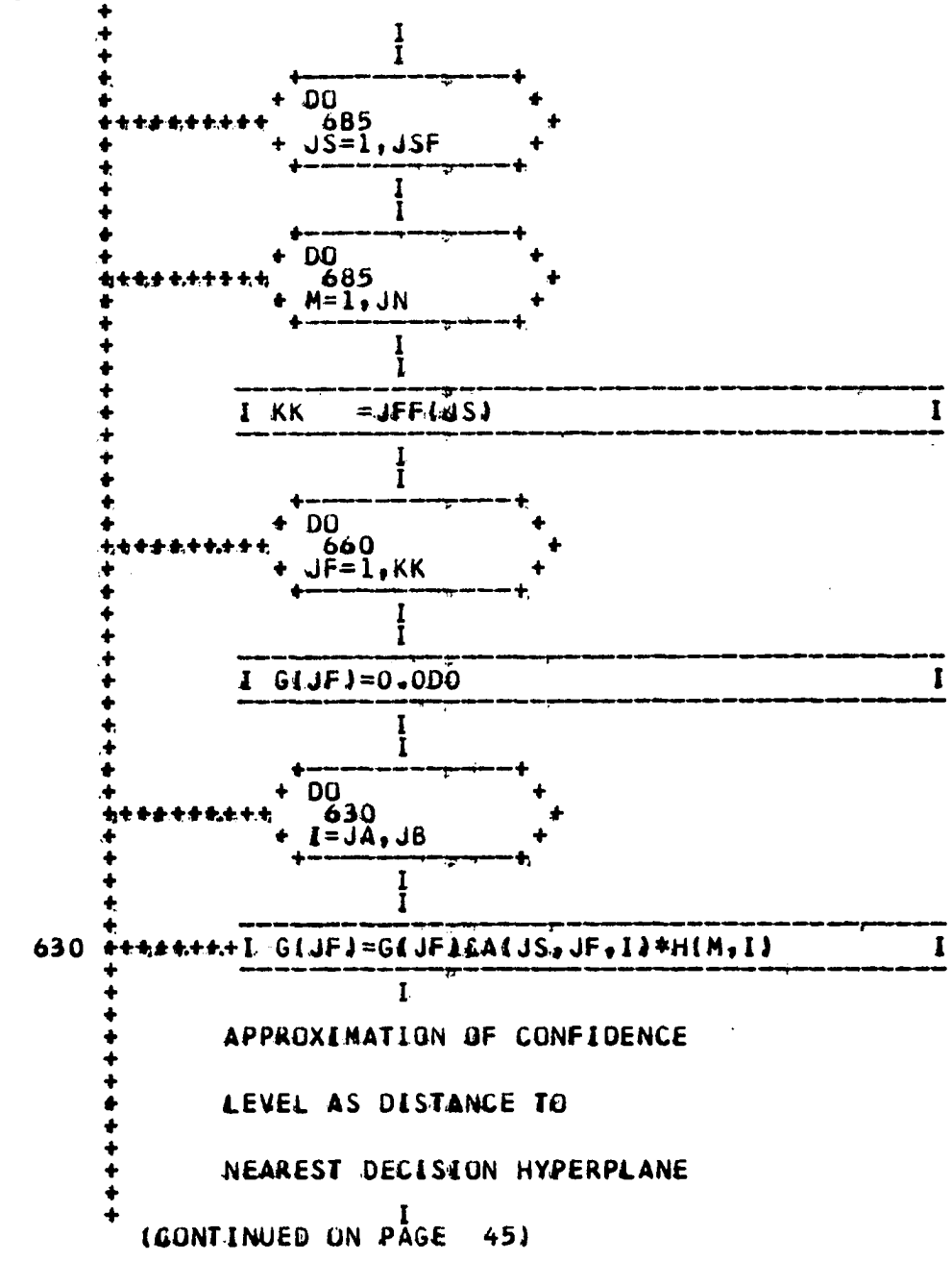

(CONTINUED ON PAGE 45)

GELISIMA PROGRAM FOR ROBBERS CAVE SIMULATION PAGE 45

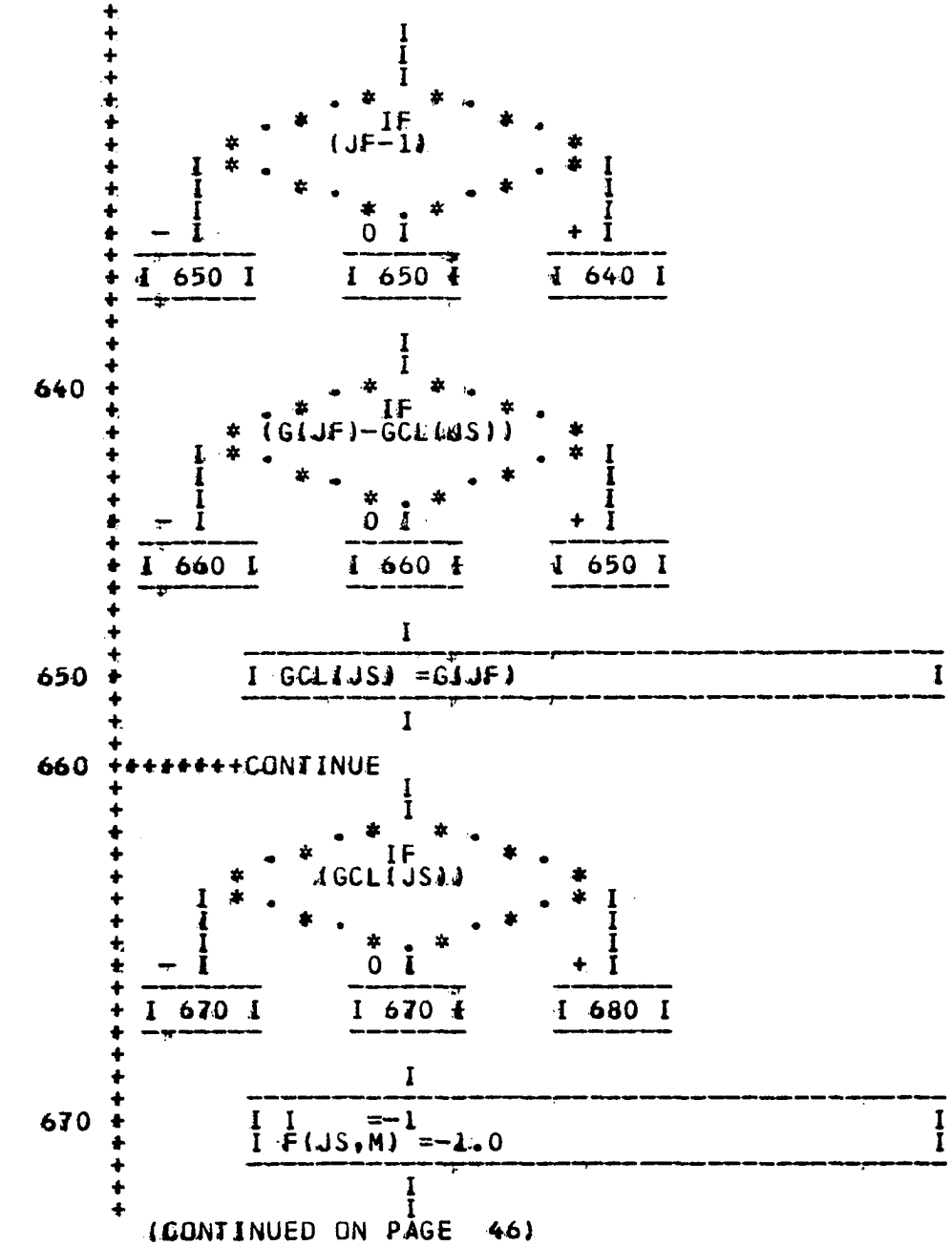

(CONTINUED ON PAGE 46)

```
GELISIMA PROGRAM FOR ROBBERS CAVE SIMULATION  PAGE  46
     +
     +                  I
     +
     +     ***WRITE (NPR,63) JDD,JS,M,I
     +                  I
     +               -------
     +               I 685 I
     +               -------
     +
     +
     +
     +                  I
     +        ------------------------------------------
 680 +        I I     =1                                I
     +        I F(JS,M) =110                            I
     +        ------------------------------------------
     +                  I
     +
     +     ***WRITE (NPR,63) JDD,JS,M,I
     +
 685 +++++***WRITE (NPR,64) GCL(JS)
     +
 686 +     ***WRITE (NPU,5) JSF
     +
     +       READOUT OF TRAINING RESULTS
     +
     +                  I
     +            +-------------+
     +           + DO           +
     +++++++++++   687           +
     +           + I=1,JN       +
     +            +-------------+
     +                  I
     +
     +     ***WRITE (NPU,4) (F(JS,I),JS=1,JSF)
     +
 687 +++++***WRITE (NPR,76) (F(JS,I),JS=1,JSF)
     +
 690 +++++++CONTINUE
             STOP

END
```

APPENDIX C

COMPARATIVE GRAPHS OF AVERAGED WEIGHTS FOR GROUP OUTPUTS AND A SAMPLE LISTING OF MADALINE WEIGHTS FOR THE COUPLED-OUTPUT FORMULATIONS OF THE RATTLER GROUP

The purpose of this appendix is to clarify the GELISIMA capability summarized in Chapter V by simply indicating the types of possible correspondences and some of the computational results. The reason for this tactic is that the expression of graphs or relations in more than three variables is conceptually difficult. In this study, the realizations have been sought in up to thirteen inputs. This is quite possible with a computer, but its reproduction is impractical.

In the GELISIMA program, each output is related through linear combinations of inputs as arguments of the signum functions. These results are used to form the object codes with the least possible square-error. That the input-output relations induced by this approach are nonlinear is evident from the definition of the signum function. However, the connection of the square-error criteria with the object codes indicates, in a general way, the dependence on the coefficients of the inputs, i.e., the weight vector components. Once normalized, the magnitudes of these components for any weight vector give approximate information concerning the relative importance of the inputs.

For example, if, of the six normalized weights of an object code coordinate, there are two with magnitudes greater than 0.1 and the other four have magnitudes less than 0.05, then the inputs associated with the larger magnitudes are correspondingly more important in forming that code coordinate of the output.

In order to obtain some similar indications of relevance between inputs, the GELISIMA weight vectors were double-averaged for each output. The averages were first formed over the normed adalines for each madaline, after which an average was then taken over all madalines. Magnitudes of these results are presented in the bar graphs of Figure C-1 through Figure C-4. Each figure contains the double averages for both groups and both formulations. The nomenclature for groups is (R) for Rattlers and (E) for Eagles. The formulations are denoted by K for those of Kern (53) which were presented in Table 3.1 and by C for the coupled-outputs related by equations (5.1).

Following Figure C-4 is a listing of the resulting GELISIMA weights for the Rattler group outputs according to equations (5.1). This presentation is intended as a sample representing about one-eighth of the total results which were summarized in Table 5.1.

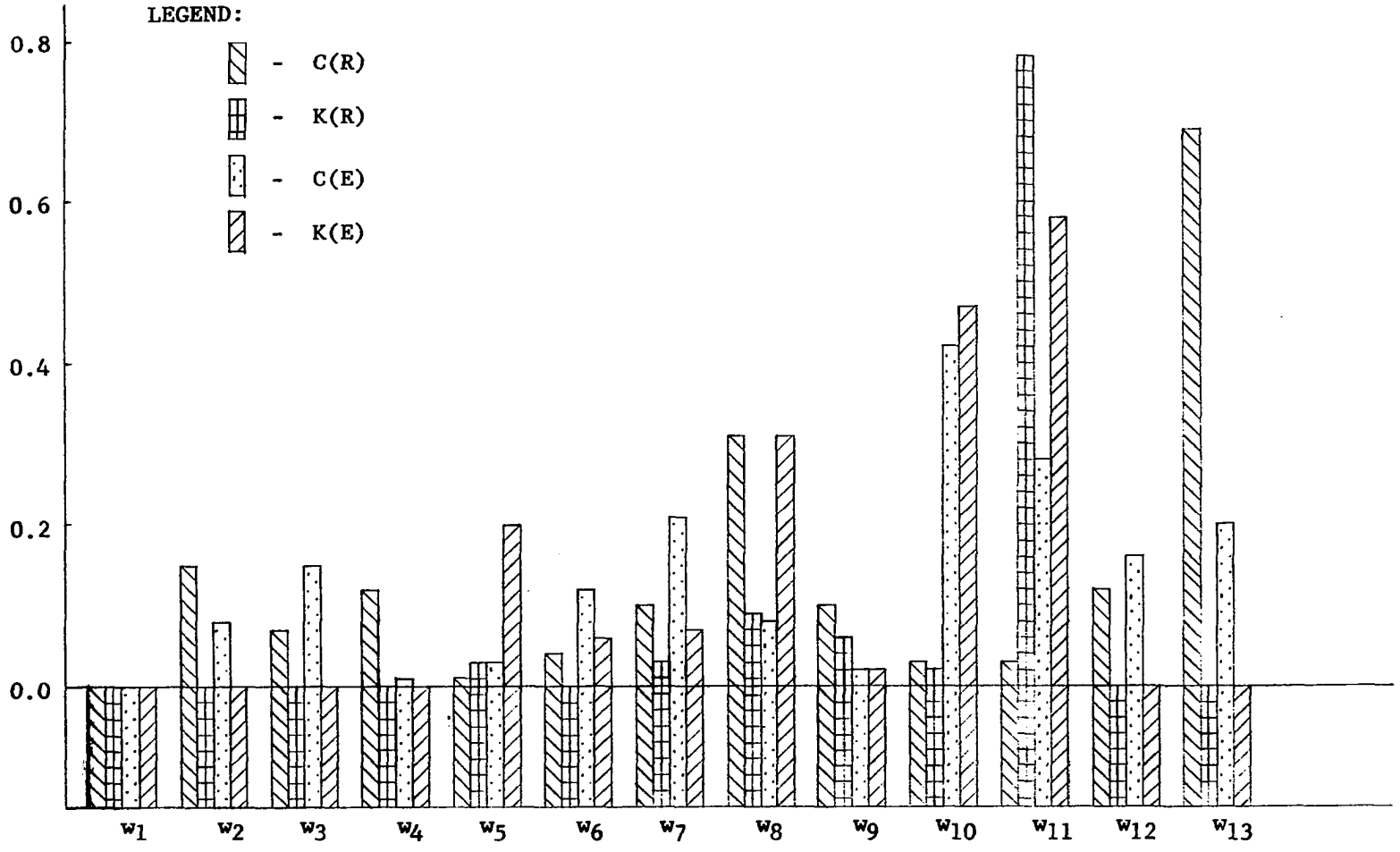

Figure C-1. Magnitudes of Double-Averaged Weights for Group Structure

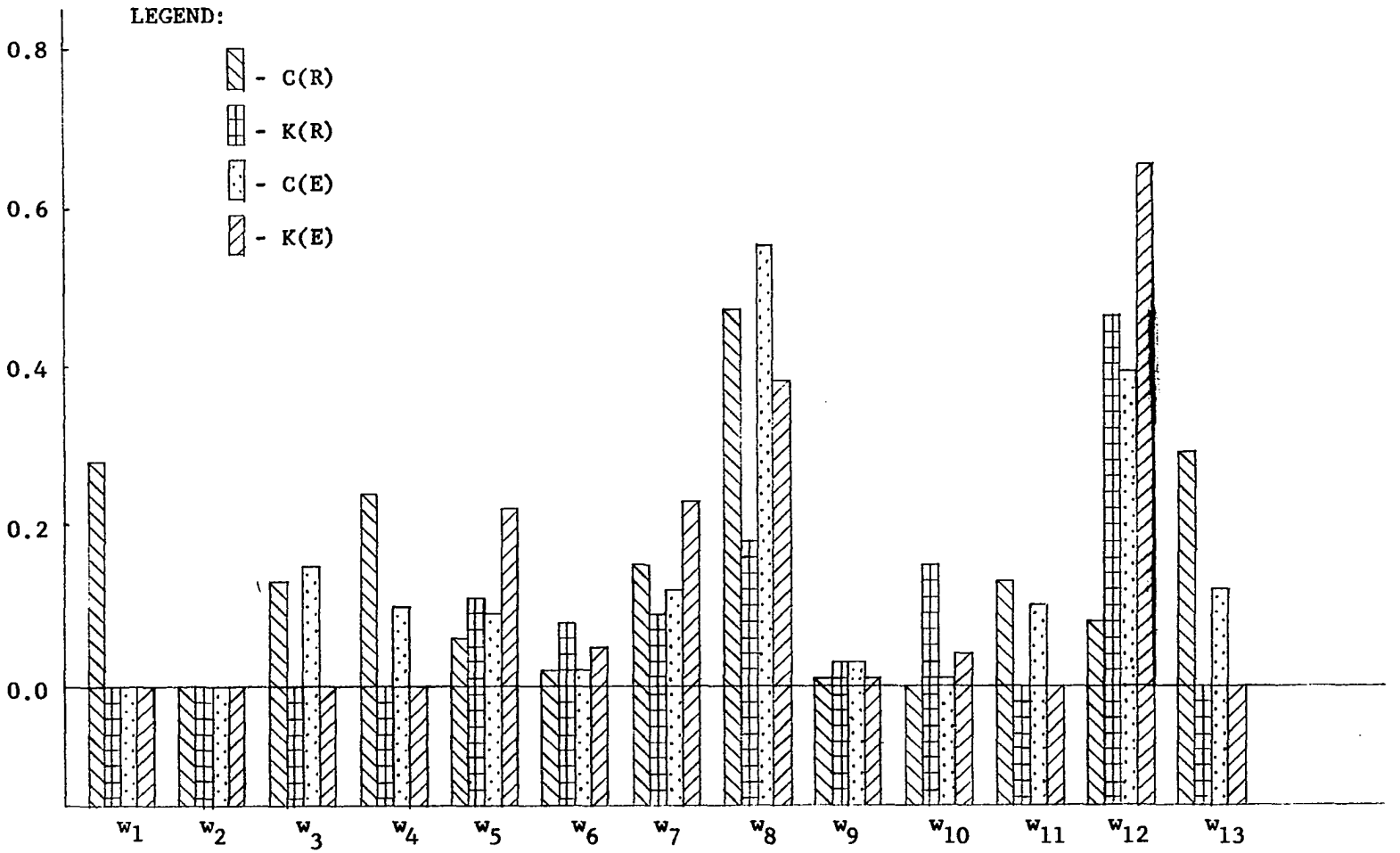

Figure C-2. Magnitudes of Double-Averaged Weights for Group Morale

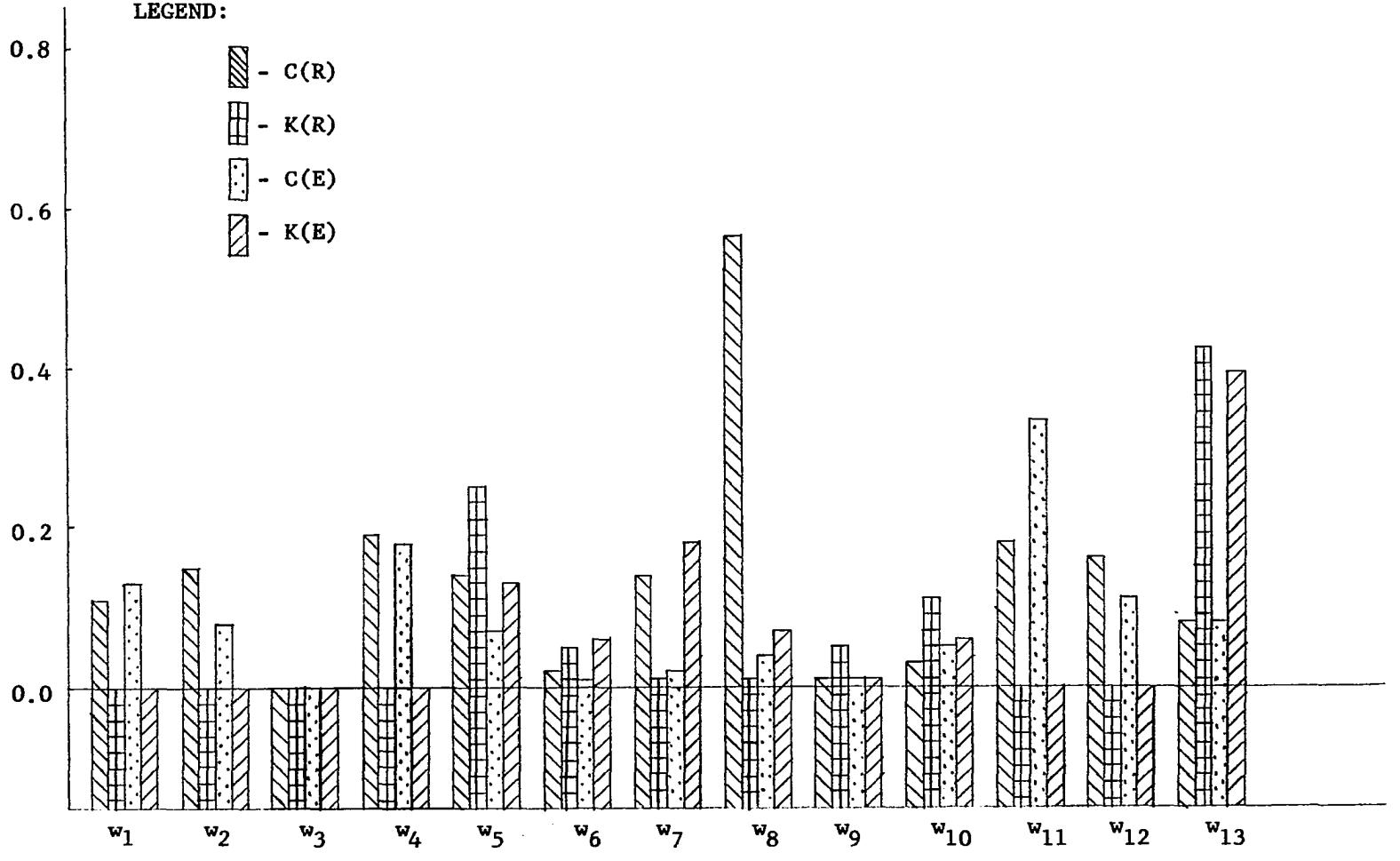

Figure C-3. Magnitudes of Double-Averaged Weights for Group Attitude

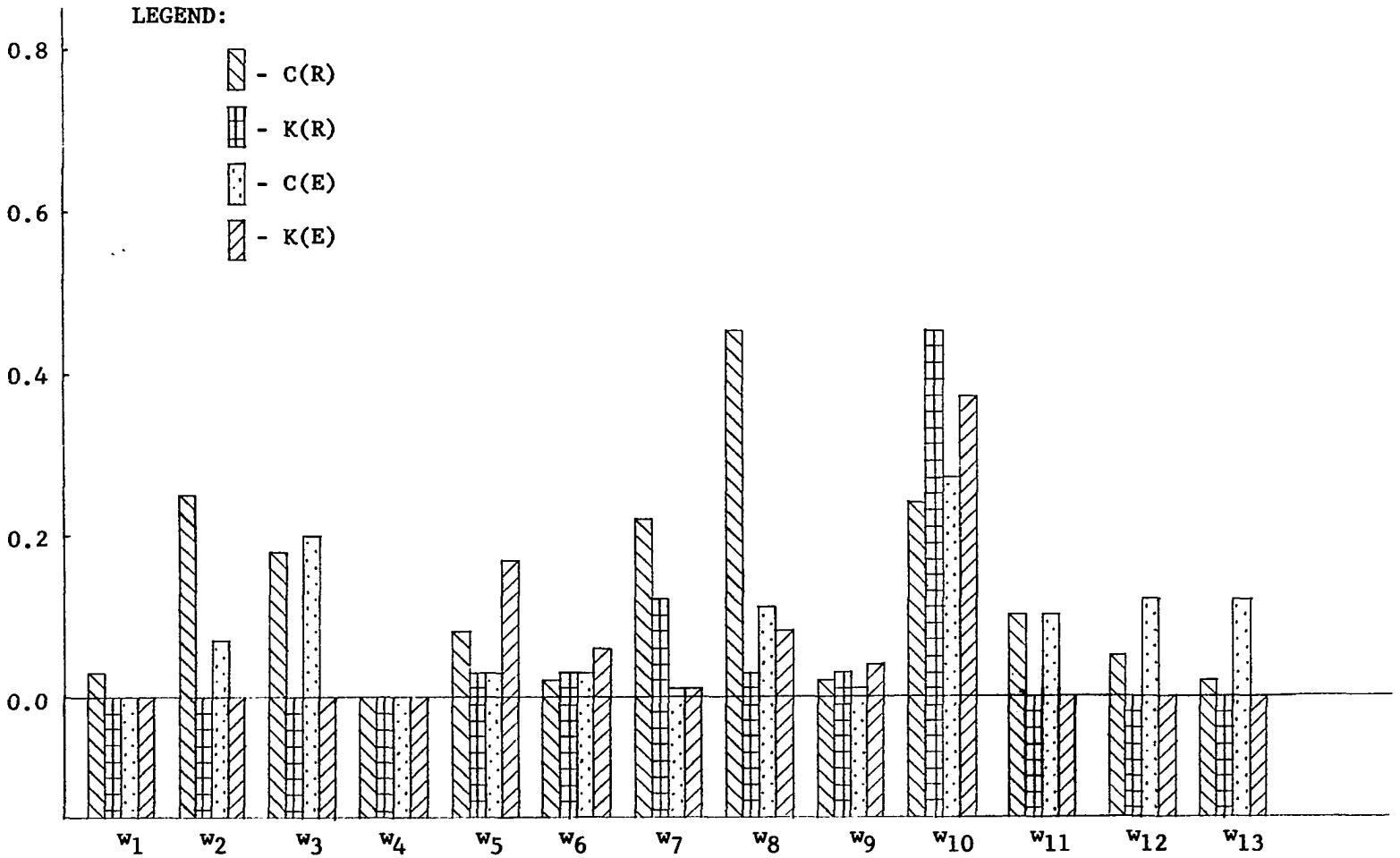

Figure C-4. Magnitudes of Double-Averaged Weights for Group Frustration

GROUP-RATTLERS DEPENDENT VARIABLE-STRUCTURE OBJECT CODE '5&3' 3-LEVEL

REALIZATION VARIABLES - MORALE, ATTITUDE, FRUSTRATION, GOAL TYPE, GOAL VALUE, ATTAINMENT, PRESENCE, NUMBER OF TIMES, LAST FRUSTRATION, AVERAGES OVER LAST THREE EVENTS OF STRUCTURE, MORALE, AND ATTITUDE

NORMALIZED WEIGHTS AND THRESHOLDS FOR 1 ADALINE(S) IN THE 1 OF 9 MADALINES

ADA 1	ADA 2	ADA 3	ADA 4	ADA 5	ADA 6	ADA 7	ADA 8	ADA 9	AVERAGE ADA
WEIGHTS									
0.0	0.0	0.0	0.0	0.0	0.0	0.0	0.0	0.0	0.0
-0.2480	0.0	0.0	0.0	0.0	0.0	0.0	0.0	0.0	-0.24801
0.1184	0.0	0.0	0.0	0.0	0.0	0.0	0.0	0.0	0.11841
0.1913	0.0	0.0	0.0	0.0	0.0	0.0	0.0	0.0	0.19126
-0.0375	0.0	0.0	0.0	0.0	0.0	0.0	0.0	0.0	-0.03745
-0.0706	0.0	0.0	0.0	0.0	0.0	0.0	0.0	0.0	-0.07055
0.1956	0.0	0.0	0.0	0.0	0.0	0.0	0.0	0.0	0.19555
0.3873	0.0	0.0	0.0	0.0	0.0	0.0	0.0	0.0	0.38733
-0.1617	0.0	0.0	0.0	0.0	0.0	0.0	0.0	0.0	-0.16175
-0.0152	0.0	0.0	0.0	0.0	0.0	0.0	0.0	0.0	-0.01519
0.1069	0.0	0.0	0.0	0.0	0.0	0.0	0.0	0.0	0.10691
-0.2490	0.0	0.0	0.0	0.0	0.0	0.0	0.0	0.0	-0.24903
-0.7703	0.0	0.0	0.0	0.0	0.0	0.0	0.0	0.0	-0.77033
THRESHOLDS - SIGNED DISTANCE TO DECISION HYPERPLANES									
-0.9356	0.0	0.0	0.0	0.0	0.0	0.0	0.0	0.0	-0.9356

GROUP-RATTLERS DEPENDENT VARIABLE-STRUCTURE OBJECT CODE '5&3' 3-LEVEL

REALIZATION VARIABLES - MORALE, ATTITUDE, FRUSTRATION, GOAL TYPE, GOAL VALUE, ATTAINMENT, PRESENCE, NUMBER OF TIMES, LAST FRUSTRATION, AVERAGES OVER LAST THREE EVENTS OF STRUCTURE, MORALE, AND ATTITUDE

NORMALIZED WEIGHTS AND THRESHOLDS FOR 1 ADALINE(S) IN THE 2 OF 9 MADALINES

ADA 1	ADA 2	ADA 3	ADA 4	ADA 5	ADA 6	ADA 7	ADA 8	ADA 9	AVERAGE ADA
WEIGHTS									
0.0	0.0	0.0	0.0	0.0	0.0	0.0	0.0	0.0	0.0
-0.2480	0.0	0.0	0.0	0.0	0.0	0.0	0.0	0.0	-0.24801
0.1184	0.0	0.0	0.0	0.0	0.0	0.0	0.0	0.0	0.11841
0.1913	0.0	0.0	0.0	0.0	0.0	0.0	0.0	0.0	0.19126
-0.0375	0.0	0.0	0.0	0.0	0.0	0.0	0.0	0.0	-0.03745
-0.0706	0.0	0.0	0.0	0.0	0.0	0.0	0.0	0.0	-0.07055
0.1956	0.0	0.0	0.0	0.0	0.0	0.0	0.0	0.0	0.19555
0.3873	0.0	0.0	0.0	0.0	0.0	0.0	0.0	0.0	0.38733
-0.1617	0.0	0.0	0.0	0.0	0.0	0.0	0.0	0.0	-0.16175
-0.0152	0.0	0.0	0.0	0.0	0.0	0.0	0.0	0.0	-0.01519
0.1069	0.0	0.0	0.0	0.0	0.0	0.0	0.0	0.0	0.10691
-0.2490	0.0	0.0	0.0	0.0	0.0	0.0	0.0	0.0	-0.24903
-0.7703	0.0	0.0	0.0	0.0	0.0	0.0	0.0	0.0	-0.77033
THRESHOLDS - SIGNED DISTANCE TO DECISION HYPERPLANES									
-0.9356	0.0	0.0	0.0	0.0	0.0	0.0	0.0	0.0	-0.9356

GROUP-RATTLERS DEPENDENT VARIABLE-STRUCTURE OBJECT CODE '5&3' 3-LEVEL

REALIZATION VARIABLES - MORALE, ATTITUDE, FRUSTRATION, GOAL TYPE, GOAL VALUE, ATTAINMENT, PRESENCE, NUMBER OF TIMES, LAST FRUSTRATION, AVERAGES OVER LAST THREE EVENTS OF STRUCTURE, MORALE, AND ATTITUDE

NORMALIZED WEIGHTS AND THRESHOLDS FOR 1 ADALINE(S) IN THE 3 OF 9 MADALINES

ADA 1	ADA 2	ADA 3	ADA 4	ADA 5	ADA 6	ADA 7	ADA 8	ADA 9	AVERAGE ADA
WEIGHTS									
0.0	0.0	0.0	0.0	0.0	0.0	0.0	0.0	0.0	0.0
-0.2480	0.0	0.0	0.0	0.0	0.0	0.0	0.0	0.0	-0.24801
0.1184	0.0	0.0	0.0	0.0	0.0	0.0	0.0	0.0	0.11841
0.1913	0.0	0.0	0.0	0.0	0.0	0.0	0.0	0.0	0.19126
-0.0375	0.0	0.0	0.0	0.0	0.0	0.0	0.0	0.0	-0.03745
-0.0706	0.0	0.0	0.0	0.0	0.0	0.0	0.0	0.0	-0.07055
0.1956	0.0	0.0	0.0	0.0	0.0	0.0	0.0	0.0	0.19555
0.3873	0.0	0.0	0.0	0.0	0.0	0.0	0.0	0.0	0.38733
-0.1617	0.0	0.0	0.0	0.0	0.0	0.0	0.0	0.0	-0.16175
-0.0152	0.0	0.0	0.0	0.0	0.0	0.0	0.0	0.0	-0.01519
0.1069	0.0	0.0	0.0	0.0	0.0	0.0	0.0	0.0	0.10691
-0.2490	0.0	0.0	0.0	0.0	0.0	0.0	0.0	0.0	-0.24903
-0.7703	0.0	0.0	0.0	0.0	0.0	0.0	0.0	0.0	-0.77033
THRESHOLDS - SIGNED DISTANCE TO DECISION HYPERPLANES									
-0.9356	0.0	0.0	0.0	0.0	0.0	0.0	0.0	0.0	-0.9356

GROUP-RATTLERS DEPENDENT VARIABLE-STRUCTURE OBJECT CODE '5&3' 3-LEVEL

REALIZATION VARIABLES - MORALE, ATTITUDE, FRUSTRATION, GOAL TYPE, GOAL VALUE, ATTAINMENT, PRESENCE, NUMBER OF TIMES, LAST FRUSTRATION, AVERAGES OVER LAST THREE EVENTS OF STRUCTURE, MORALE, AND ATTITUDE

NORMALIZED WEIGHTS AND THRESHOLDS FOR 1 ADALINE(S) IN THE 4 OF 9 MADALINES

ADA 1	ADA 2	ADA 3	ADA 4	ADA 5	ADA 6	ADA 7	ADA 8	ADA 9	AVERAGE ADA
WEIGHTS									
0.0	0.0	0.0	0.0	0.0	0.0	0.0	0.0	0.0	0.0
-0.2480	0.0	0.0	0.0	0.0	0.0	0.0	0.0	0.0	-0.24801
0.1184	0.0	0.0	0.0	0.0	0.0	0.0	0.0	0.0	0.11841
0.1913	0.0	0.0	0.0	0.0	0.0	0.0	0.0	0.0	0.19126
-0.0375	0.0	0.0	0.0	0.0	0.0	0.0	0.0	0.0	-0.03745
-0.0706	0.0	0.0	0.0	0.0	0.0	0.0	0.0	0.0	-0.07055
0.1956	0.0	0.0	0.0	0.0	0.0	0.0	0.0	0.0	0.19555
0.3873	0.0	0.0	0.0	0.0	0.0	0.0	0.0	0.0	0.38733
-0.1617	0.0	0.0	0.0	0.0	0.0	0.0	0.0	0.0	-0.16175
-0.0152	0.0	0.0	0.0	0.0	0.0	0.0	0.0	0.0	-0.01519
0.1069	0.0	0.0	0.0	0.0	0.0	0.0	0.0	0.0	0.10691
-0.2490	0.0	0.0	0.0	0.0	0.0	0.0	0.0	0.0	-0.24903
-0.7703	0.0	0.0	0.0	0.0	0.0	0.0	0.0	0.0	-0.77033
THRESHOLDS - SIGNED DISTANCE TO DECISION HYPERPLANES									
-0.9356	0.0	0.0	0.0	0.0	0.0	0.0	0.0	0.0	-0.9356

GROUP-RATTLERS DEPENDENT VARIABLE-STRUCTURE OBJECT CODE '5&3' 3-LEVEL

REALIZATION VARIABLES - MORALE, ATTITUDE, FRUSTRATION, GOAL TYPE, GOAL VALUE, ATTAINMENT, PRESENCE, NUMBER OF TIMES, LAST FRUSTRATION, AVERAGES OVER LAST THREE EVENTS OF STRUCTURE, MORALE, AND ATTITUDE

NORMALIZED WEIGHTS AND THRESHOLDS FOR 3 ADALINE(S) IN THE 5 OF 9 MADALINES

ADA 1	ADA 2	ADA 3	ADA 4	ADA 5	ADA 6	ADA 7	ADA 8	ADA 9	AVERAGE ADA
WEIGHTS									
0.0	0.0	0.0	0.0	0.0	0.0	0.0	0.0	0.0	0.0
0.0206	0.1570	0.1196	0.0	0.0	0.0	0.0	0.0	0.0	0.09909
-0.0831	-0.2762	-0.2145	0.0	0.0	0.0	0.0	0.0	0.0	-0.19123
0.0377	-0.1317	-0.2145	0.0	0.0	0.0	0.0	0.0	0.0	-0.10283
0.0039	0.1570	0.1196	0.0	0.0	0.0	0.0	0.0	0.0	0.09353
-0.0671	-0.0063	-0.1177	0.0	0.0	0.0	0.0	0.0	0.0	-0.06370
0.0830	-0.1317	-0.2145	0.0	0.0	0.0	0.0	0.0	0.0	-0.08772
0.9518	0.8789	0.7879	0.0	0.0	0.0	0.0	0.0	0.0	0.87285
-0.2636	0.0323	0.2679	0.0	0.0	0.0	0.0	0.0	0.0	0.01221
-0.0281	-0.1317	-0.2145	0.0	0.0	0.0	0.0	0.0	0.0	-0.12477
0.0544	-0.1317	-0.2145	0.0	0.0	0.0	0.0	0.0	0.0	-0.09727
-0.0113	0.1570	0.1196	0.0	0.0	0.0	0.0	0.0	0.0	0.08846
0.0254	0.0825	-0.1441	0.0	0.0	0.0	0.0	0.0	0.0	-0.01205
THRESHOLDS - SIGNED DISTANCE TO DECISION HYPERPLANES									
-0.9431	-0.4457	-0.4538	0.0	0.0	0.0	0.0	0.0	0.0	-0.6142

GROUP-RATTLERS DEPENDENT VARIABLE-STRUCTURE OBJECT CODE '563' 3-LEVEL

REALIZATION VARIABLES - MORALE, ATTITUDE, FRUSTRATION, GOAL TYPE, GOAL VALUE, ATTAINMENT, PRESENCE, NUMBER OF TIMES, LAST FRUSTRATION, AVERAGES OVER LAST THREE EVENTS OF STRUCTURE, MORALE, AND ATTITUDE

NORMALIZED WEIGHTS AND THRESHOLDS FOR 1 ADALINE(S) IN THE 6 OF 9 MADALINES

ADA 1	ADA 2	ADA 3	ADA 4	ADA 5	ADA 6	ADA 7	ADA 8	ADA 9	AVERAGE ADA
WEIGHTS									
0.0	0.0	0.0	0.0	0.0	0.0	0.0	0.0	0.0	0.0
0.0311	0.0	0.0	0.0	0.0	0.0	0.0	0.0	0.0	0.03110
0.1530	0.0	0.0	0.0	0.0	0.0	0.0	0.0	0.0	0.15299
0.1504	0.0	0.0	0.0	0.0	0.0	0.0	0.0	0.0	0.15043
0.0005	0.0	0.0	0.0	0.0	0.0	0.0	0.0	0.0	0.00048
0.0322	0.0	0.0	0.0	0.0	0.0	0.0	0.0	0.0	0.03231
0.0330	0.0	0.0	0.0	0.0	0.0	0.0	0.0	0.0	0.03304
-0.2027	0.0	0.0	0.0	0.0	0.0	0.0	0.0	0.0	-0.20268
-0.0670	0.0	0.0	0.0	0.0	0.0	0.0	0.0	0.0	-0.06696
0.0300	0.0	0.0	0.0	0.0	0.0	0.0	0.0	0.0	0.02996
0.0387	0.0	0.0	0.0	0.0	0.0	0.0	0.0	0.0	0.03867
0.0897	0.0	0.0	0.0	0.0	0.0	0.0	0.0	0.0	0.08969
-0.9460	0.0	0.0	0.0	0.0	0.0	0.0	0.0	0.0	-0.94597
THRESHOLDS - SIGNED DISTANCE TO DECISION HYPERPLANES									
-0.5967	0.0	0.0	0.0	0.0	0.0	0.0	0.0	0.0	-0.5967

GROUP-RATTLERS DEPENDENT VARIABLE-STRUCTURE OBJECT CODE '5&3' 3-LEVEL

REALIZATION VARIABLES - MORALE, ATTITUDE, FRUSTRATION, GOAL TYPE, GOAL VALUE, ATTAINMENT, PRESENCE, NUMBER OF TIMES, LAST FRUSTRATION, AVERAGES OVER LAST THREE EVENTS OF STRUCTURE, MORALE, AND ATTITUDE

NORMALIZED WEIGHTS AND THRESHOLDS FOR 1 ADALINE(S) IN THE 7 OF 9 MADALINES

ADA 1	ADA 2	ADA 3	ADA 4	ADA 5	ADA 6	ADA 7	ADA 8	ADA 9	AVERAGE ADA
WEIGHTS									
0.0	0.0	0.0	0.0	0.0	0.0	0.0	0.0	0.0	0.0
0.0311	0.0	0.0	0.0	0.0	0.0	0.0	0.0	0.0	0.03110
0.1530	0.0	0.0	0.0	0.0	0.0	0.0	0.0	0.0	0.15299
0.1504	0.0	0.0	0.0	0.0	0.0	0.0	0.0	0.0	0.15043
0.0005	0.0	0.0	0.0	0.0	0.0	0.0	0.0	0.0	0.00048
0.0328	0.0	0.0	0.0	0.0	0.0	0.0	0.0	0.0	0.03231
0.0330	0.0	0.0	0.0	0.0	0.0	0.0	0.0	0.0	0.03304
-0.2027	0.0	0.0	0.0	0.0	0.0	0.0	0.0	0.0	-0.20268
-0.0670	0.0	0.0	0.0	0.0	0.0	0.0	0.0	0.0	-0.06696
0.0300	0.0	0.0	0.0	0.0	0.0	0.0	0.0	0.0	0.02996
0.0387	0.0	0.0	0.0	0.0	0.0	0.0	0.0	0.0	0.03867
0.0897	0.0	0.0	0.0	0.0	0.0	0.0	0.0	0.0	0.08969
-0.9460	0.0	0.0	0.0	0.0	0.0	0.0	0.0	0.0	-0.94597
THRESHOLDS - SIGNED DISTANCE TO DECISION HYPERPLANES									
-0.5967	0.0	0.0	0.0	0.0	0.0	0.0	0.0	0.0	-0.5967

GROUP-RATTLERS DEPENDENT VARIABLE-STRUCTURE OBJECT CODE '5&3' 3-LEVEL

REALIZATION VARIABLES - MORALE, ATTITUDE, FRUSTRATION, GOAL TYPE, GOAL VALUE, ATTAINMENT, PRESENCE, NUMBER OF TIMES, LAST FRUSTRATION, AVERAGES OVER LAST THREE EVENTS OF STRUCTURE, MORALE, AND ATTITUDE

NORMALIZED WEIGHTS AND THRESHOLDS FOR 3 ADALINE(S) IN THE 8 OF 9 MADALINES

ADA 1	ADA 2	ADA 3	ADA 4	ADA 5	ADA 6	ADA 7	ADA 8	ADA 9	AVERAGE ADA
WEIGHTS									
0.0	0.0	0.0	0.0	0.0	0.0	0.0	0.0	0.0	0.0
0.0311	-0.3358	-0.4742	0.0	0.0	0.0	0.0	0.0	0.0	-0.25965
0.1530	-0.1099	0.0579	0.0	0.0	0.0	0.0	0.0	0.0	0.03368
0.1504	-0.0396	0.0161	0.0	0.0	0.0	0.0	0.0	0.0	0.04231
0.0005	0.0330	-0.0776	0.0	0.0	0.0	0.0	0.0	0.0	-0.01473
0.0323	-0.0323	-0.0509	0.0	0.0	0.0	0.0	0.0	0.0	-0.01698
0.0330	0.0860	0.1255	0.0	0.0	0.0	0.0	0.0	0.0	0.08152
-0.2027	0.8004	0.5959	0.0	0.0	0.0	0.0	0.0	0.0	0.39788
-0.0670	-0.0517	-0.0856	0.0	0.0	0.0	0.0	0.0	0.0	-0.06808
0.0300	-0.1406	-0.0927	0.0	0.0	0.0	0.0	0.0	0.0	-0.06778
0.0387	-0.1244	-0.1428	0.0	0.0	0.0	0.0	0.0	0.0	-0.07619
0.0897	-0.2423	-0.3225	0.0	0.0	0.0	0.0	0.0	0.0	-0.15839
-0.9460	-0.3559	-0.5017	0.0	0.0	0.0	0.0	0.0	0.0	-0.60120
THRESHOLDS - SIGNED DISTANCE TO DECISION HYPERPLANES									
-0.5967	-1.1716	-1.5196	0.0	0.0	0.0	0.0	0.0	0.0	-1.0960

GROUP-RATTLERS DEPENDENT VARIABLE-STRUCTURE OBJECT CODE '5&3' 3-LEVEL

REALIZATION VARIABLES - MORALE, ATTITUDE, FRUSTRATION, GOAL TYPE, GOAL VALUE, ATTAINMENT, PRESENCE, NUMBER OF TIMES, LAST FRUSTRATION, AVERAGES OVER LAST THREE EVENTS OF STRUCTURE, MORALE, AND ATTITUDE

NORMALIZED WEIGHTS AND THRESHOLDS FOR 3 ADALINE(S) IN THE 9 OF 9 MADALINES

ADA 1	ADA 2	ADA 3	ADA 4	ADA 5	ADA 6	ADA 7	ADA 8	ADA 9	AVERAGE ADA
WEIGHTS									
0.0	0.0	0.0	0.0	0.0	0.0	0.0	0.0	0.0	0.0
0.0311	-0.3358	-0.4742	0.0	0.0	0.0	0.0	0.0	0.0	-0.25965
0.1530	-0.1099	0.0579	0.0	0.0	0.0	0.0	0.0	0.0	0.03368
0.1504	-0.0396	0.0161	0.0	0.0	0.0	0.0	0.0	0.0	0.04231
0.0005	0.0330	-0.0776	0.0	0.0	0.0	0.0	0.0	0.0	-0.01473
0.0323	-0.0323	-0.0509	0.0	0.0	0.0	0.0	0.0	0.0	-0.01698
0.0330	0.0860	0.1255	0.0	0.0	0.0	0.0	0.0	0.0	0.08152
-0.2027	0.8004	0.5959	0.0	0.0	0.0	0.0	0.0	0.0	0.39788
-0.0670	-0.0517	-0.0856	0.0	0.0	0.0	0.0	0.0	0.0	-0.06808
0.0300	-0.1406	-0.0927	0.0	0.0	0.0	0.0	0.0	0.0	-0.06778
0.0387	-0.1244	-0.1428	0.0	0.0	0.0	0.0	0.0	0.0	-0.07619
0.0897	-0.2423	-0.3225	0.0	0.0	0.0	0.0	0.0	0.0	-0.15839
-0.9460	-0.3559	-0.5017	0.0	0.0	0.0	0.0	0.0	0.0	-0.60120

THRESHOLDS - SIGNED DISTANCE TO DECISION HYPERPLANES

-0.5967	-1.1716	-1.5196	0.0	0.0	0.0	0.0	0.0	0.0	-1.0960

GELISIMA CAN CORRECTLY CLASSIFY 41 OF 41 TRAINING PATTERNS ON THE ABOVE VARIABLE

AVERAGE OVER MADALINES OF AVERAGE ADALINES TO INDICATE DEPENDENCES
0.0 -0.15 0.07 0.12-0.01-0.04 0.10 0.31-0.10-0.03 0.03-0.12-0.69-0.86

GROUP-RATTLERS DEPENDENT VARIABLE-MORALE OBJECT CODE '5&3' 3-LEVEL

REALIZATION VARIABLES - STRUCTURE, ATTITUDE, FRUSTRATION, GOAL TYPE, GOAL VALUE, ATTAINMENT, PRESENCE, NUMBER OF TIMES, LAST FRUSTRATION, AVERAGES OVER LAST THREE EVENTS OF STRUCTURE, MORALE, AND ATTITUDE

NORMALIZED WEIGHTS AND THRESHOLDS FOR 1 ADALINE(S) IN THE 1 OF 9 MADALINES

ADA 1	ADA 2	ADA 3	ADA 4	ADA 5	ADA 6	ADA 7	ADA 8	ADA 9	AVERAGE ADA
WEIGHTS									
-0.2354	0.0	0.0	0.0	0.0	0.0	0.0	0.0	0.0	-0.23542
0.0	0.0	0.0	0.0	0.0	0.0	0.0	0.0	0.0	0.0
-0.2435	0.0	0.0	0.0	0.0	0.0	0.0	0.0	0.0	-0.24348
-0.3719	0.0	0.0	0.0	0.0	0.0	0.0	0.0	0.0	-0.37190
-0.1575	0.0	0.0	0.0	0.0	0.0	0.0	0.0	0.0	-0.15749
-0.0485	0.0	0.0	0.0	0.0	0.0	0.0	0.0	0.0	-0.04848
-0.1428	0.0	0.0	0.0	0.0	0.0	0.0	0.0	0.0	-0.14277
0.6369	0.0	0.0	0.0	0.0	0.0	0.0	0.0	0.0	0.63695
0.0093	0.0	0.0	0.0	0.0	0.0	0.0	0.0	0.0	0.00931
-0.1783	0.0	0.0	0.0	0.0	0.0	0.0	0.0	0.0	-0.17832
-0.4068	0.0	0.0	0.0	0.0	0.0	0.0	0.0	0.0	-0.40683
-0.2528	0.0	0.0	0.0	0.0	0.0	0.0	0.0	0.0	-0.25281
-0.1801	0.0	0.0	0.0	0.0	0.0	0.0	0.0	0.0	-0.18010
THRESHOLDS - SIGNED DISTANCE TO DECISION HYPERPLANES									
-1.8343	0.0	0.0	0.0	0.0	0.0	0.0	0.0	0.0	-1.8343

GROUP—RATTLERS DEPENDENT VARIABLE—MORALE OBJECT CODE '5&3' 3-LEVEL

REALIZATION VARIABLES — STRUCTURE, ATTITUDE, FRUSTRATION, GOAL TYPE, GOAL VALUE, ATTAINMENT, PRESENCE, NUMBER OF TIMES, LAST FRUSTRATION, AVERAGES OVER LAST THREE EVENTS OF STRUCTURE, MORALE, AND ATTITUDE

NORMALIZED WEIGHTS AND THRESHOLDS FOR 1 ADALINE(S) IN THE 2 OF 9 MADALINES

ADA 1	ADA 2	ADA 3	ADA 4	ADA 5	ADA 6	ADA 7	ADA 8	ADA 9	AVERAGE ADA
WEIGHTS									
-0.2354	0.0	0.0	0.0	0.0	0.0	0.0	0.0	0.0	-0.23542
0.0	0.0	0.0	0.0	0.0	0.0	0.0	0.0	0.0	0.0
-0.2435	0.0	0.0	0.0	0.0	0.0	0.0	0.0	0.0	-0.24348
-0.3719	0.0	0.0	0.0	0.0	0.0	0.0	0.0	0.0	-0.37190
-0.1575	0.0	0.0	0.0	0.0	0.0	0.0	0.0	0.0	-0.15749
-0.0485	0.0	0.0	0.0	0.0	0.0	0.0	0.0	0.0	-0.04848
-0.1428	0.0	0.0	0.0	0.0	0.0	0.0	0.0	0.0	-0.14277
0.6369	0.0	0.0	0.0	0.0	0.0	0.0	0.0	0.0	0.63695
0.0093	0.0	0.0	0.0	0.0	0.0	0.0	0.0	0.0	0.00931
-0.1783	0.0	0.0	0.0	0.0	0.0	0.0	0.0	0.0	-0.17832
-0.4068	0.0	0.0	0.0	0.0	0.0	0.0	0.0	0.0	-0.40683
-0.2528	0.0	0.0	0.0	0.0	0.0	0.0	0.0	0.0	-0.25281
-0.1801	0.0	0.0	0.0	0.0	0.0	0.0	0.0	0.0	-0.18010
THRESHOLDS — SIGNED DISTANCE TO DECISION HYPERPLANES									
-1.8343	0.0	0.0	0.0	0.0	0.0	0.0	0.0	0.0	-1.8343

GROUP-RATTLERS DEPENDENT VARIABLE-MORALE OBJECT CODE '5&3' 3-LEVEL

REALIZATION VARIABLES - STRUCTURE, ATTITUDE, FRUSTRATION, GOAL TYPE, GOAL VALUE, ATTAINMENT, PRESENCE, NUMBER OF TIMES, LAST FRUSTRATION, AVERAGES OVER LAST THREE EVENTS OF STRUCTURE, MORALE, AND ATTITUDE

NORMALIZED WEIGHTS AND THRESHOLDS FOR 1 ADALINE(S) IN THE 3 OF 9 MADALINES

ADA 1	ADA 2	ADA 3	ADA 4	ADA 5	ADA 6	ADA 7	ADA 8	ADA 9	AVERAGE ADA
WEIGHTS									
-0.2354	0.0	0.0	0.0	0.0	0.0	0.0	0.0	0.0	-0.23542
0.0	0.0	0.0	0.0	0.0	0.0	0.0	0.0	0.0	0.0
-0.2435	0.0	0.0	0.0	0.0	0.0	0.0	0.0	0.0	-0.24348
-0.3719	0.0	0.0	0.0	0.0	0.0	0.0	0.0	0.0	-0.37190
-0.1575	0.0	0.0	0.0	0.0	0.0	0.0	0.0	0.0	-0.15749
-0.0485	0.0	0.0	0.0	0.0	0.0	0.0	0.0	0.0	-0.04848
-0.1428	0.0	0.0	0.0	0.0	0.0	0.0	0.0	0.0	-0.14277
0.6369	0.0	0.0	0.0	0.0	0.0	0.0	0.0	0.0	0.63695
0.0093	0.0	0.0	0.0	0.0	0.0	0.0	0.0	0.0	0.00931
-0.1783	0.0	0.0	0.0	0.0	0.0	0.0	0.0	0.0	-0.17832
-0.4068	0.0	0.0	0.0	0.0	0.0	0.0	0.0	0.0	-0.40683
-0.2528	0.0	0.0	0.0	0.0	0.0	0.0	0.0	0.0	-0.25281
-0.1801	0.0	0.0	0.0	0.0	0.0	0.0	0.0	0.0	-0.18010
THRESHOLDS - SIGNED DISTANCE TO DECISION HYPERPLANES									
-1.8343	0.0	0.0	0.0	0.0	0.0	0.0	0.0	0.0	-1.8343

GROUP-RATTLERS DEPENDENT VARIABLE-MORALE OBJECT CODE '563' 3-LEVEL

REALIZATION VARIABLES - STRUCTURE, ATTITUDE, FRUSTRATION, GOAL TYPE, GOAL VALUE, ATTAINMENT, PRESENCE, NUMBER OF TIMES, LAST FRUSTRATION, AVERAGES OVER LAST THREE EVENTS OF STRUCTURE, MORALE, AND ATTITUDE

NORMALIZED WEIGHTS AND THRESHOLDS FOR 1 ADALINE(S) IN THE 4 OF 9 MADALINES

ADA 1	ADA 2	ADA 3	ADA 4	ADA 5	ADA 6	ADA 7	ADA 8	ADA 9	AVERAGE ADA
WEIGHTS									
-0.2354	0.0	0.0	0.0	0.0	0.0	0.0	0.0	0.0	-0.23542
0.0	0.0	0.0	0.0	0.0	0.0	0.0	0.0	0.0	0.0
-0.2485	0.0	0.0	0.0	0.0	0.0	0.0	0.0	0.0	-0.24348
-0.3719	0.0	0.0	0.0	0.0	0.0	0.0	0.0	0.0	-0.37190
-0.1575	0.0	0.0	0.0	0.0	0.0	0.0	0.0	0.0	-0.15749
-0.0485	0.0	0.0	0.0	0.0	0.0	0.0	0.0	0.0	-0.04848
-0.1428	0.0	0.0	0.0	0.0	0.0	0.0	0.0	0.0	-0.14277
0.6369	0.0	0.0	0.0	0.0	0.0	0.0	0.0	0.0	0.63695
0.0093	0.0	0.0	0.0	0.0	0.0	0.0	0.0	0.0	0.00931
-0.1783	0.0	0.0	0.0	0.0	0.0	0.0	0.0	0.0	-0.17832
-0.4068	0.0	0.0	0.0	0.0	0.0	0.0	0.0	0.0	-0.40683
-0.2528	0.0	0.0	0.0	0.0	0.0	0.0	0.0	0.0	-0.25281
-0.1801	0.0	0.0	0.0	0.0	0.0	0.0	0.0	0.0	-0.18010
THRESHOLDS - SIGNED DISTANCE TO DECISION HYPERPLANES									
-1.8343	0.0	0.0	0.0	0.0	0.0	0.0	0.0	0.0	-1.8343

GROUP-RATTLERS DEPENDENT VARIABLE-MORALE OBJECT CODE '563' 3-LEVEL

REALIZATION VARIABLES - STRUCTURE, ATTITUDE, FRUSTRATION, GOAL TYPE, GOAL VALUE, ATTAINMENT, PRESENCE, NUMBER OF TIMES, LAST FRUSTRATION, AVERAGES OVER LAST THREE EVENTS OF STRUCTURE, MORALE, AND ATTITUDE

NORMALIZED WEIGHTS AND THRESHOLDS FOR 1 ADALINE(S) IN THE 5 OF 9 MADALINES

ADA 1	ADA 2	ADA 3	ADA 4	ADA 5	ADA 6	ADA 7	ADA 8	ADA 9	AVERAGE ADA
WEIGHTS									
0.2293	0.0	0.0	0.0	0.0	0.0	0.0	0.0	0.0	0.22933
0.0	0.0	0.0	0.0	0.0	0.0	0.0	0.0	0.0	0.0
0.0543	0.0	0.0	0.0	0.0	0.0	0.0	0.0	0.0	0.05429
-0.0781	0.0	0.0	0.0	0.0	0.0	0.0	0.0	0.0	-0.07810
-0.1778	0.0	0.0	0.0	0.0	0.0	0.0	0.0	0.0	-0.17784
-0.1326	0.0	0.0	0.0	0.0	0.0	0.0	0.0	0.0	-0.13258
0.2533	0.0	0.0	0.0	0.0	0.0	0.0	0.0	0.0	0.25326
0.6010	0.0	0.0	0.0	0.0	0.0	0.0	0.0	0.0	0.60100
-0.0952	0.0	0.0	0.0	0.0	0.0	0.0	0.0	0.0	-0.09522
-0.2864	0.0	0.0	0.0	0.0	0.0	0.0	0.0	0.0	-0.28636
-0.4463	0.0	0.0	0.0	0.0	0.0	0.0	0.0	0.0	-0.44634
0.0414	0.0	0.0	0.0	0.0	0.0	0.0	0.0	0.0	0.04140
0.4145	0.0	0.0	0.0	0.0	0.0	0.0	0.0	0.0	0.41451
THRESHOLDS - SIGNED DISTANCE TO DECISION HYPERPLANES									
-0.5950	0.0	0.0	0.0	0.0	0.0	0.0	0.0	0.0	-0.5950

GROUP-RATTLERS DEPENDENT VARIABLE-MORALE OBJECT CODE '5&3' 3-LEVEL

REALIZATION VARIABLES - STRUCTURE, ATTITUDE, FRUSTRATION, GOAL TYPE, GOAL VALUE, ATTAINMENT, PRESENCE, NUMBER OF TIMES, LAST FRUSTRATION, AVERAGES OVER LAST THREE EVENTS OF STRUCTURE, MORALE, AND ATTITUDE

NORMALIZED WEIGHTS AND THRESHOLDS FOR 3 ADALINE(S) IN THE 6 OF 9 MADALINES

ADA 1	ADA 2	ADA 3	ADA 4	ADA 5	ADA 6	ADA 7	ADA 8	ADA 9	AVERAGE ADA
WEIGHTS									
-0.3038	-0.5212	-0.5353	0.0	0.0	0.0	0.0	0.0	0.0	-0.45346
0.0	0.0	0.0	0.0	0.0	0.0	0.0	0.0	0.0	0.0
-0.0840	-0.0687	-0.0655	0.0	0.0	0.0	0.0	0.0	0.0	-0.07272
-0.1191	-0.1400	-0.1535	0.0	0.0	0.0	0.0	0.0	0.0	-0.13752
0.1790	0.0236	0.0320	0.0	0.0	0.0	0.0	0.0	0.0	0.07820
0.0512	0.0336	0.0356	0.0	0.0	0.0	0.0	0.0	0.0	0.04017
-0.2538	-0.2630	-0.2869	0.0	0.0	0.0	0.0	0.0	0.0	-0.26792
-0.2359	0.5424	0.4747	0.0	0.0	0.0	0.0	0.0	0.0	0.26038
0.1298	-0.0697	-0.0699	0.0	0.0	0.0	0.0	0.0	0.0	-0.00324
0.3296	0.1992	0.2273	0.0	0.0	0.0	0.0	0.0	0.0	0.25204
0.3741	0.1337	0.1455	0.0	0.0	0.0	0.0	0.0	0.0	0.21776
0.0229	0.0698	0.1064	0.0	0.0	0.0	0.0	0.0	0.0	0.06638
-0.6824	-0.5212	-0.5353	0.0	0.0	0.0	0.0	0.0	0.0	-0.57967
THRESHOLDS - SIGNED DISTANCE TO DECISION HYPERPLANES									
-0.5685	-0.9817	-1.0239	0.0	0.0	0.0	0.0	0.0	0.0	-0.8580

GROUP-RATTLERS DEPENDENT VARIABLE-MORALE OBJECT CODE '5&3' 3-LEVEL

REALIZATION VARIABLES - STRUCTURE, ATTITUDE, FRUSTRATION, GOAL TYPE, GOAL VALUE, ATTAINMENT, PRESENCE, NUMBER OF TIMES, LAST FRUSTRATION, AVERAGES OVER LAST THREE EVENTS OF STRUCTURE, MORALE, AND ATTITUDE

NORMALIZED WEIGHTS AND THRESHOLDS FOR 3 ADALINE(S) IN THE 7 OF 9 MADALINES

ADA 1	ADA 2	ADA 3	ADA 4	ADA 5	ADA 6	ADA 7	ADA 8	ADA 9	AVERAGE ADA
WEIGHTS									
-0.3038	-0.5212	-0.5353	0.0	0.0	0.0	0.0	0.0	0.0	-0.45346
0.0	0.0	0.0	0.0	0.0	0.0	0.0	0.0	0.0	0.0
-0.0840	-0.0687	-0.0655	0.0	0.0	0.0	0.0	0.0	0.0	-0.07272
-0.1191	-0.1400	-0.1535	0.0	0.0	0.0	0.0	0.0	0.0	-0.13752
0.1790	0.0236	0.0320	0.0	0.0	0.0	0.0	0.0	0.0	0.07820
0.0512	0.0336	0.0356	0.0	0.0	0.0	0.0	0.0	0.0	0.04017
-0.2538	-0.2630	-0.2869	0.0	0.0	0.0	0.0	0.0	0.0	-0.26792
-0.2359	0.5424	0.4747	0.0	0.0	0.0	0.0	0.0	0.0	0.26038
0.1298	-0.0697	-0.0699	0.0	0.0	0.0	0.0	0.0	0.0	-0.00324
0.3296	0.1992	0.2273	0.0	0.0	0.0	0.0	0.0	0.0	0.25204
0.3741	0.1337	0.1455	0.0	0.0	0.0	0.0	0.0	0.0	0.21776
0.0229	0.0698	0.1064	0.0	0.0	0.0	0.0	0.0	0.0	0.06638
-0.6824	-0.5212	-0.5353	0.0	0.0	0.0	0.0	0.0	0.0	-0.57967
THRESHOLDS - SIGNED DISTANCE TO DECISION HYPERPLANES									
-0.5685	-0.9817	-1.0239	0.0	0.0	0.0	0.0	0.0	0.0	-0.8580

GROUP-RATTLERS DEPENDENT VARIABLE-MORALE OBJECT CODE '5&3' 3-LEVEL

REALIZATION VARIABLES - STRUCTURE, ATTITUDE, FRUSTRATION, GOAL TYPE, GOAL VALUE, ATTAINMENT, PRESENCE, NUMBER OF TIMES, LAST FRUSTRATION, AVERAGES OVER LAST THREE EVENTS OF STRUCTURE, MORALE, AND ATTITUDE

NORMALIZED WEIGHTS AND THRESHOLDS FOR 3 ADALINE(S) IN THE 8 OF 9 MADALINES

ADA 1	ADA 2	ADA 3	ADA 4	ADA 5	ADA 6	ADA 7	ADA 8	ADA 9	AVERAGE ADA
WEIGHTS									
-0.3038	-0.5212	-0.5353	0.0	0.0	0.0	0.0	0.0	0.0	-0.45346
0.0	0.0	0.0	0.0	0.0	0.0	0.0	0.0	0.0	0.0
-0.0840	-0.0687	-0.0655	0.0	0.0	0.0	0.0	0.0	0.0	-0.07272
-0.1191	-0.1400	-0.1535	0.0	0.0	0.0	0.0	0.0	0.0	-0.13752
0.1790	0.0236	0.0320	0.0	0.0	0.0	0.0	0.0	0.0	0.07820
0.0512	0.0336	0.0356	0.0	0.0	0.0	0.0	0.0	0.0	0.04017
-0.2538	-0.2630	-0.2869	0.0	0.0	0.0	0.0	0.0	0.0	-0.26792
-0.2359	0.5424	0.4747	0.0	0.0	0.0	0.0	0.0	0.0	0.26038
0.1298	-0.0697	-0.0699	0.0	0.0	0.0	0.0	0.0	0.0	-0.00324
0.3296	0.1992	0.2273	0.0	0.0	0.0	0.0	0.0	0.0	0.25204
0.3741	0.1337	0.1455	0.0	0.0	0.0	0.0	0.0	0.0	0.21776
0.0229	0.0698	0.1064	0.0	0.0	0.0	0.0	0.0	0.0	0.06638
-0.6824	-0.5212	-0.5353	0.0	0.0	0.0	0.0	0.0	0.0	-0.57967
THRESHOLDS - SIGNED DISTANCE TO DECISION HYPERPLANES									
-0.5685	-0.9817	-1.0239	0.0	0.0	0.0	0.0	0.0	0.0	-0.8580

GROUP-RATTLERS DEPENDENT VARIABLE-MORALE OBJECT CODE '5&3' 3-LEVEL

REALIZATION VARIABLES - STRUCTURE, ATTITUDE, FRUSTRATION, GOAL TYPE, GOAL VALUE, ATTAINMENT, PRESENCE, NUMBER OF TIMES, LAST FRUSTRATION, AVERAGES OVER LAST THREE EVENTS OF STRUCTURE, MORALE, AND ATTITUDE

NORMALIZED WEIGHTS AND THRESHOLDS FOR 3 ADALINE(S) IN THE 9 OF 9 MADALINES

ADA 1	ADA 2	ADA 3	ADA 4	ADA 5	ADA 6	ADA 7	ADA 8	ADA 9	AVERAGE ADA
WEIGHTS									
-0.3038	-0.5212	-0.5353	0.0	0.0	0.0	0.0	0.0	0.0	-0.45346
0.0	0.0	0.0	0.0	0.0	0.0	0.0	0.0	0.0	0.0
-0.0840	-0.0687	-0.0655	0.0	0.0	0.0	0.0	0.0	0.0	-0.07272
-0.1191	-0.1400	-0.1535	0.0	0.0	0.0	0.0	0.0	0.0	-0.13752
0.1790	0.0236	0.0320	0.0	0.0	0.0	0.0	0.0	0.0	0.07820
0.0512	0.0336	0.0356	0.0	0.0	0.0	0.0	0.0	0.0	0.04017
-0.2538	-0.2630	-0.2869	0.0	0.0	0.0	0.0	0.0	0.0	-0.26792
-0.2359	0.5424	0.4747	0.0	0.0	0.0	0.0	0.0	0.0	0.26038
0.1298	-0.0697	-0.0699	0.0	0.0	0.0	0.0	0.0	0.0	-0.00324
0.3296	0.1992	0.2273	0.0	0.0	0.0	0.0	0.0	0.0	0.25204
0.3741	0.1337	0.1455	0.0	0.0	0.0	0.0	0.0	0.0	0.21776
0.0229	0.0698	0.1064	0.0	0.0	0.0	0.0	0.0	0.0	0.06638
-0.6824	-0.5212	-0.5353	0.0	0.0	0.0	0.0	0.0	0.0	-0.57967
THRESHOLDS - SIGNED DISTANCE TO DECISION HYPERPLANES									
-0.5685	-0.9817	-1.0239	0.0	0.0	0.0	0.0	0.0	0.0	-0.8580

GELISIMA CAN CORRECTLY CLASSIFY 39 OF 41 TRAINING PATTERNS ON THE ABOVE VARIABLE

AVERAGE OVER MADALINES OF AVERAGE ADALINES TO INDICATE DEPENDENCES
0.28 0.0 -0.13-0.24-0.06-0.02-0.15 0.47-0.01 0.00-0.13-0.08-0.29-1.26

GROUP-RATTLERS DEPENDENT VARIABLE-ATTITUDE OBJECT CODE '5&3' 5-LEVEL

REALIZATION VARIABLES - STRUCTURE, MORALE, FRUSTRATION, GOAL TYPE, GOAL VALUE, ATTAINMENT, PRESENCE, NUMBER OF TIMES, LAST FRUSTRATION, AVERAGES OVER LAST THREE EVENTS OF STRUCTURE, MORALE, AND ATTITUDE

NORMALIZED WEIGHTS AND THRESHOLDS FOR 3 ADALINE(S) IN THE 1 OF 17 MADALINES

ADA 1	ADA 2	ADA 3	ADA 4	ADA 5	ADA 6	ADA 7	ADA 8	ADA 9	AVERAGE ADA
WEIGHTS									
-0.3172	-0.2130	-0.2145	0.0	0.0	0.0	0.0	0.0	0.0	-0.24823
-0.3879	-0.2628	-0.2553	0.0	0.0	0.0	0.0	0.0	0.0	-0.30200
0.0	0.0	0.0	0.0	0.0	0.0	0.0	0.0	0.0	0.0
-0.2861	-0.0860	-0.1150	0.0	0.0	0.0	0.0	0.0	0.0	-0.16232
-0.1498	-0.0603	-0.0996	0.0	0.0	0.0	0.0	0.0	0.0	-0.10325
-0.0655	-0.0142	-0.0296	0.0	0.0	0.0	0.0	0.0	0.0	-0.03643
-0.2338	-0.1031	-0.1156	0.0	0.0	0.0	0.0	0.0	0.0	-0.15086
0.6983	0.8960	0.8971	0.0	0.0	0.0	0.0	0.0	0.0	0.83047
0.0431	0.0312	0.0344	0.0	0.0	0.0	0.0	0.0	0.0	0.03624
0.2638	-0.0386	0.0080	0.0	0.0	0.0	0.0	0.0	0.0	0.07775
-0.0177	-0.1965	-0.1624	0.0	0.0	0.0	0.0	0.0	0.0	-0.12551
0.1617	-0.0842	-0.0646	0.0	0.0	0.0	0.0	0.0	0.0	0.00431
-0.0097	-0.1127	-0.1221	0.0	0.0	0.0	0.0	0.0	0.0	-0.08149
THRESHOLDS - SIGNED DISTANCE TO DECISION HYPERPLANES									
-0.6701	-0.8643	-0.8781	0.0	0.0	0.0	0.0	0.0	0.0	-0.8042

GROUP-RATTLERS DEPENDENT VARIABLE-ATTITUDE OBJECT CODE '5&3' 5-LEVEL

REALIZATION VARIABLES - STRUCTURE, MORALE, FRUSTRATION, GOAL TYPE, GOAL VALUE, ATTAINMENT, PRESENCE, NUMBER OF TIMES, LAST FRUSTRATION, AVERAGES OVER LAST THREE EVENTS OF STRUCTURE, MORALE, AND ATTITUDE

NORMALIZED WEIGHTS AND THRESHOLDS FOR 3 ADALINE(S) IN THE 2 OF 17 MADALINES

ADA 1	ADA 2	ADA 3	ADA 4	ADA 5	ADA 6	ADA 7	ADA 8	ADA 9	AVERAGE ADA
WEIGHTS									
-0.3172	-0.2130	-0.2145	0.0	0.0	0.0	0.0	0.0	0.0	-0.24823
-0.3879	-0.2628	-0.2553	0.0	0.0	0.0	0.0	0.0	0.0	-0.30200
0.0	0.0	0.0	0.0	0.0	0.0	0.0	0.0	0.0	0.0
-0.2861	-0.0860	-0.1150	0.0	0.0	0.0	0.0	0.0	0.0	-0.16232
-0.1498	-0.0603	-0.0996	0.0	0.0	0.0	0.0	0.0	0.0	-0.10325
-0.0655	-0.0142	-0.0296	0.0	0.0	0.0	0.0	0.0	0.0	-0.03643
-0.2338	-0.1031	-0.1156	0.0	0.0	0.0	0.0	0.0	0.0	-0.15086
0.6983	0.8960	0.8971	0.0	0.0	0.0	0.0	0.0	0.0	0.83047
0.0431	0.0312	0.0344	0.0	0.0	0.0	0.0	0.0	0.0	0.03624
0.2638	-0.0386	0.0080	0.0	0.0	0.0	0.0	0.0	0.0	0.07775
-0.0177	-0.1965	-0.1624	0.0	0.0	0.0	0.0	0.0	0.0	-0.12551
0.1617	-0.0842	-0.0646	0.0	0.0	0.0	0.0	0.0	0.0	0.00431
-0.0097	-0.1127	-0.1221	0.0	0.0	0.0	0.0	0.0	0.0	-0.08149
THRESHOLDS - SIGNED DISTANCE TO DECISION HYPERPLANES									
-0.6701	-0.8643	-0.8781	0.0	0.0	0.0	0.0	0.0	0.0	-0.8042

GROUP-RATTLERS DEPENDENT VARIABLE-ATTITUDE OBJECT CODE '5&3' 5-LEVEL

REALIZATION VARIABLES - STRUCTURE, MORALE, FRUSTRATION, GOAL TYPE, GOAL VALUE, ATTAINMENT, PRESENCE, NUMBER OF TIMES, LAST FRUSTRATION, AVERAGES OVER LAST THREE EVENTS OF STRUCTURE, MORALE, AND ATTITUDE

NORMALIZED WEIGHTS AND THRESHOLDS FOR 3 ADALINE(S) IN THE 3 OF 17 MADALINES

ADA 1	ADA 2	ADA 3	ADA 4	ADA 5	ADA 6	ADA 7	ADA 8	ADA 9	AVERAGE ADA
WEIGHTS									
-0.3172	-0.2130	-0.2145	0.0	0.0	0.0	0.0	0.0	0.0	-0.24823
-0.3879	-0.2628	-0.2553	0.0	0.0	0.0	0.0	0.0	0.0	-0.30200
0.0	0.0	0.0	0.0	0.0	0.0	0.0	0.0	0.0	0.0
-0.2861	-0.0860	-0.1150	0.0	0.0	0.0	0.0	0.0	0.0	-0.16232
-0.1498	-0.0603	-0.0996	0.0	0.0	0.0	0.0	0.0	0.0	-0.10325
-0.0655	-0.0142	-0.0296	0.0	0.0	0.0	0.0	0.0	0.0	-0.03643
-0.2338	-0.1031	-0.1156	0.0	0.0	0.0	0.0	0.0	0.0	-0.15086
0.6983	0.8960	0.8971	0.0	0.0	0.0	0.0	0.0	0.0	0.83047
0.0431	0.0312	0.0344	0.0	0.0	0.0	0.0	0.0	0.0	0.03624
0.2638	-0.0386	0.0080	0.0	0.0	0.0	0.0	0.0	0.0	0.07775
-0.0177	-0.1965	-0.1624	0.0	0.0	0.0	0.0	0.0	0.0	-0.12551
0.1617	-0.0842	-0.0646	0.0	0.0	0.0	0.0	0.0	0.0	0.00431
-0.0097	-0.1127	-0.1221	0.0	0.0	0.0	0.0	0.0	0.0	-0.08149
THRESHOLDS - SIGNED DISTANCE TO DECISION HYPERPLANES									
-0.6701	-0.8643	-0.8781	0.0	0.0	0.0	0.0	0.0	0.0	-0.8042

GROUP-RATTLERS DEPENDENT VARIABLE-ATTITUDE OBJECT CODE '5&3' 5-LEVEL

REALIZATION VARIABLES - STRUCTURE, MORALE, FRUSTRATION, GOAL TYPE, GOAL VALUE, ATTAINMENT, PRESENCE, NUMBER OF TIMES, LAST FRUSTRATION, AVERAGES OVER LAST THREE EVENTS OF STRUCTURE, MORALE, AND ATTITUDE

NORMALIZED WEIGHTS AND THRESHOLDS FOR 3 ADALINE(S) IN THE 4 OF 17 MADALINES

ADA 1	ADA 2	ADA 3	ADA 4	ADA 5	ADA 6	ADA 7	ADA 8	ADA 9	AVERAGE ADA
WEIGHTS									
-0.3172	-0.2130	-0.2145	0.0	0.0	0.0	0.0	0.0	0.0	-0.24823
-0.3879	-0.2628	-0.2553	0.0	0.0	0.0	0.0	0.0	0.0	-0.30200
0.0	0.0	0.0	0.0	0.0	0.0	0.0	0.0	0.0	0.0
-0.2861	-0.0860	-0.1150	0.0	0.0	0.0	0.0	0.0	0.0	-0.16232
-0.1498	-0.0603	-0.0996	0.0	0.0	0.0	0.0	0.0	0.0	-0.10325
-0.0655	-0.0142	-0.0296	0.0	0.0	0.0	0.0	0.0	0.0	-0.03643
-0.2338	-0.1031	-0.1156	0.0	0.0	0.0	0.0	0.0	0.0	-0.15086
0.6983	0.8960	0.8971	0.0	0.0	0.0	0.0	0.0	0.0	0.83047
0.0431	0.0312	0.0344	0.0	0.0	0.0	0.0	0.0	0.0	0.03624
0.2638	-0.0386	0.0080	0.0	0.0	0.0	0.0	0.0	0.0	0.07775
-0.0177	-0.1965	-0.1624	0.0	0.0	0.0	0.0	0.0	0.0	-0.12551
0.1617	-0.0842	-0.0646	0.0	0.0	0.0	0.0	0.0	0.0	0.00431
-0.0097	-0.1127	-0.1221	0.0	0.0	0.0	0.0	0.0	0.0	-0.08149
THRESHOLDS - SIGNED DISTANCE TO DECISION HYPERPLANES									
-0.6701	-0.8643	-0.8781	0.0	0.0	0.0	0.0	0.0	0.0	-0.8042

GROUP-RATTLERS DEPENDENT VARIABLE-ATTITUDE OBJECT CODE '5&3' 5-LEVEL

REALIZATION VARIABLES - STRUCTURE, MORALE, FRUSTRATION,
GOAL TYPE, GOAL VALUE, ATTAINMENT, PRESENCE, NUMBER OF TIMES, LAST FRUSTRATION,
AVERAGES OVER LAST THREE EVENTS OF STRUCTURE, MORALE, AND ATTITUDE

NORMALIZED WEIGHTS AND THRESHOLDS FOR 3 ADALINE(S) IN THE 5 OF 17 MADALINES

ADA 1	ADA 2	ADA 3	ADA 4	ADA 5	ADA 6	ADA 7	ADA 8	ADA 9	AVERAGE ADA
WEIGHTS									
-0.6636	-0.1807	-0.1990	0.0	0.0	0.0	0.0	0.0	0.0	-0.34776
0.2064	-0.1044	-0.1421	0.0	0.0	0.0	0.0	0.0	0.0	-0.01338
0.0	0.0	0.0	0.0	0.0	0.0	0.0	0.0	0.0	0.0
-0.4513	-0.3964	-0.3991	0.0	0.0	0.0	0.0	0.0	0.0	-0.41560
0.2442	0.3251	0.2327	0.0	0.0	0.0	0.0	0.0	0.0	0.26732
0.0323	0.0331	0.0276	0.0	0.0	0.0	0.0	0.0	0.0	0.03099
-0.0290	-0.0444	-0.1475	0.0	0.0	0.0	0.0	0.0	0.0	-0.07367
-0.1494	0.7746	0.7984	0.0	0.0	0.0	0.0	0.0	0.0	0.47452
0.0791	-0.0879	-0.0567	0.0	0.0	0.0	0.0	0.0	0.0	-0.02181
0.0637	-0.2624	-0.1516	0.0	0.0	0.0	0.0	0.0	0.0	-0.11677
0.2416	0.0181	-0.0838	0.0	0.0	0.0	0.0	0.0	0.0	0.05862
0.3626	0.1063	0.1718	0.0	0.0	0.0	0.0	0.0	0.0	0.21357
-0.1713	-0.0493	-0.0636	0.0	0.0	0.0	0.0	0.0	0.0	-0.09472
THRESHOLDS - SIGNED DISTANCE TO DECISION HYPERPLANES									
-0.6750	-0.8419	-0.9263	0.0	0.0	0.0	0.0	0.0	0.0	-0.8144

GROUP-RATTLERS DEPENDENT VARIABLE-ATTITUDE OBJECT CODE '5&3' 5-LEVEL

REALIZATION VARIABLES - STRUCTURE, MORALE, FRUSTRATION, GOAL TYPE, GOAL VALUE, ATTAINMENT, PRESENCE, NUMBER OF TIMES, LAST FRUSTRATION, AVERAGES OVER LAST THREE EVENTS OF STRUCTURE, MORALE, AND ATTITUDE

NORMALIZED WEIGHTS AND THRESHOLDS FOR 1 ADALINE(S) IN THE 6 OF 17 MADALINES

ADA 1	ADA 2	ADA 3	ADA 4	ADA 5	ADA 6	ADA 7	ADA 8	ADA 9	AVERAGE ADA
WEIGHTS									
0.1985	0.0	0.0	0.0	0.0	0.0	0.0	0.0	0.0	0.19846
-0.2706	0.0	0.0	0.0	0.0	0.0	0.0	0.0	0.0	-0.27057
0.0	0.0	0.0	0.0	0.0	0.0	0.0	0.0	0.0	0.0
0.2216	0.0	0.0	0.0	0.0	0.0	0.0	0.0	0.0	0.22158
-0.0800	0.0	0.0	0.0	0.0	0.0	0.0	0.0	0.0	-0.07996
-0.0664	0.0	0.0	0.0	0.0	0.0	0.0	0.0	0.0	-0.06645
-0.0355	0.0	0.0	0.0	0.0	0.0	0.0	0.0	0.0	-0.03548
0.6778	0.0	0.0	0.0	0.0	0.0	0.0	0.0	0.0	0.67782
-0.0365	0.0	0.0	0.0	0.0	0.0	0.0	0.0	0.0	-0.03648
0.0979	0.0	0.0	0.0	0.0	0.0	0.0	0.0	0.0	0.09789
-0.0398	0.0	0.0	0.0	0.0	0.0	0.0	0.0	0.0	-0.03981
-0.5685	0.0	0.0	0.0	0.0	0.0	0.0	0.0	0.0	-0.56855
0.1762	0.0	0.0	0.0	0.0	0.0	0.0	0.0	0.0	0.17623
THRESHOLDS - SIGNED DISTANCE TO DECISION HYPERPLANES									
-0.2127	0.0	0.0	0.0	0.0	0.0	0.0	0.0	0.0	-0.2127

GROUP-RATTLERS DEPENDENT VARIABLE-ATTITUDE OBJECT CODE '583' 5-LEVEL

REALIZATION VARIABLES - STRUCTURE, MORALE, FRUSTRATION, GOAL TYPE, GOAL VALUE, ATTAINMENT, PRESENCE, NUMBER OF TIMES, LAST FRUSTRATION, AVERAGES OVER LAST THREE EVENTS OF STRUCTURE, MORALE, AND ATTITUDE

NORMALIZED WEIGHTS AND THRESHOLDS FOR 1 ADALINE(S) IN THE 7 OF 17 MADALINES

ADA 1	ADA 2	ADA 3	ADA 4	ADA 5	ADA 6	ADA 7	ADA 8	ADA 9	AVERAGE ADA
WEIGHTS									
0.1985	0.0	0.0	0.0	0.0	0.0	0.0	0.0	0.0	0.19846
-0.2706	0.0	0.0	0.0	0.0	0.0	0.0	0.0	0.0	-0.27057
0.0	0.0	0.0	0.0	0.0	0.0	0.0	0.0	0.0	0.0
0.2216	0.0	0.0	0.0	0.0	0.0	0.0	0.0	0.0	0.22158
-0.0800	0.0	0.0	0.0	0.0	0.0	0.0	0.0	0.0	-0.07996
-0.0664	0.0	0.0	0.0	0.0	0.0	0.0	0.0	0.0	-0.06645
-0.0355	0.0	0.0	0.0	0.0	0.0	0.0	0.0	0.0	-0.03548
0.6778	0.0	0.0	0.0	0.0	0.0	0.0	0.0	0.0	0.67782
-0.0365	0.0	0.0	0.0	0.0	0.0	0.0	0.0	0.0	-0.03648
0.0979	0.0	0.0	0.0	0.0	0.0	0.0	0.0	0.0	0.09789
-0.0398	0.0	0.0	0.0	0.0	0.0	0.0	0.0	0.0	-0.03981
-0.5685	0.0	0.0	0.0	0.0	0.0	0.0	0.0	0.0	-0.56855
0.1762	0.0	0.0	0.0	0.0	0.0	0.0	0.0	0.0	0.17623
THRESHOLDS - SIGNED DISTANCE TO DECISION HYPERPLANES									
-0.2127	0.0	0.0	0.0	0.0	0.0	0.0	0.0	0.0	-0.2127

GROUP-RATTLERS DEPENDENT VARIABLE-ATTITUDE OBJECT CODE '5&3' 5-LEVEL

REALIZATION VARIABLES - STRUCTURE, MORALE, FRUSTRATION, GOAL TYPE, GOAL VALUE, ATTAINMENT, PRESENCE, NUMBER OF TIMES, LAST FRUSTRATION, AVERAGES OVER LAST THREE EVENTS OF STRUCTURE, MORALE, AND ATTITUDE

NORMALIZED WEIGHTS AND THRESHOLDS FOR 1 ADALINE(S) IN THE 8 OF 17 MADALINES

ADA 1	ADA 2	ADA 3	ADA 4	ADA 5	ADA 6	ADA 7	ADA 8	ADA 9	AVERAGE ADA
WEIGHTS									
0.1985	0.0	0.0	0.0	0.0	0.0	0.0	0.0	0.0	0.19846
-0.2706	0.0	0.0	0.0	0.0	0.0	0.0	0.0	0.0	-0.27057
0.0	0.0	0.0	0.0	0.0	0.0	0.0	0.0	0.0	0.0
0.2216	0.0	0.0	0.0	0.0	0.0	0.0	0.0	0.0	0.22158
-0.0800	0.0	0.0	0.0	0.0	0.0	0.0	0.0	0.0	-0.07996
-0.0664	0.0	0.0	0.0	0.0	0.0	0.0	0.0	0.0	-0.06645
-0.0355	0.0	0.0	0.0	0.0	0.0	0.0	0.0	0.0	-0.03548
0.6778	0.0	0.0	0.0	0.0	0.0	0.0	0.0	0.0	0.67782
-0.0365	0.0	0.0	0.0	0.0	0.0	0.0	0.0	0.0	-0.03648
0.0979	0.0	0.0	0.0	0.0	0.0	0.0	0.0	0.0	0.09789
-0.0398	0.0	0.0	0.0	0.0	0.0	0.0	0.0	0.0	-0.03981
-0.5685	0.0	0.0	0.0	0.0	0.0	0.0	0.0	0.0	-0.56855
0.1762	0.0	0.0	0.0	0.0	0.0	0.0	0.0	0.0	0.17623
THRESHOLDS - SIGNED DISTANCE TO DECISION HYPERPLANES									
-0.2127	0.0	0.0	0.0	0.0	0.0	0.0	0.0	0.0	-0.2127

GROUP-RATTLERS DEPENDENT VARIABLE-ATTITUDE OBJECT CODE '563' 5-LEVEL

REALIZATION VARIABLES - STRUCTURE, MORALE, FRUSTRATION, GOAL TYPE, GOAL VALUE, ATTAINMENT, PRESENCE, NUMBER OF TIMES, LAST FRUSTRATION, AVERAGES OVER LAST THREE EVENTS OF STRUCTURE, MORALE, AND ATTITUDE

NORMALIZED WEIGHTS AND THRESHOLDS FOR 3 ADALINE(S) IN THE 9 OF 17 MADALINES

ADA 1	ADA 2	ADA 3	ADA 4	ADA 5	ADA 6	ADA 7	ADA 8	ADA 9	AVERAGE ADA
WEIGHTS									
0.1758	-0.0275	-0.0924	0.0	0.0	0.0	0.0	0.0	0.0	0.01866
-0.1753	-0.1189	-0.1632	0.0	0.0	0.0	0.0	0.0	0.0	-0.15245
0.0	0.0	0.0	0.0	0.0	0.0	0.0	0.0	0.0	0.0
0.0588	-0.1683	-0.0351	0.0	0.0	0.0	0.0	0.0	0.0	-0.04819
0.1335	0.2301	0.0070	0.0	0.0	0.0	0.0	0.0	0.0	0.12352
-0.1743	-0.0026	-0.1329	0.0	0.0	0.0	0.0	0.0	0.0	-0.10327
-0.4018	-0.1948	-0.2168	0.0	0.0	0.0	0.0	0.0	0.0	-0.27112
0.7945	0.8456	0.9248	0.0	0.0	0.0	0.0	0.0	0.0	0.85498
-0.0412	0.0440	0.0583	0.0	0.0	0.0	0.0	0.0	0.0	0.02039
0.0041	-0.3755	-0.0708	0.0	0.0	0.0	0.0	0.0	0.0	-0.14739
0.1398	0.0124	-0.1210	0.0	0.0	0.0	0.0	0.0	0.0	0.01042
-0.2161	-0.0876	-0.1371	0.0	0.0	0.0	0.0	0.0	0.0	-0.14693
0.1612	0.0104	-0.0421	0.0	0.0	0.0	0.0	0.0	0.0	0.04316
THRESHOLDS - SIGNED DISTANCE TO DECISION HYPERPLANES									
-0.3733	-0.6927	-0.7603	0.0	0.0	0.0	0.0	0.0	0.0	-0.6090

GROUP-RATTLERS DEPENDENT VARIABLE-ATTITUDE OBJECT CODE '563' 5-LEVEL

REALIZATION VARIABLES - STRUCTURE, MORALE, FRUSTRATION, GOAL TYPE, GOAL VALUE, ATTAINMENT, PRESENCE, NUMBER OF TIMES, LAST FRUSTRATION, AVERAGES OVER LAST THREE EVENTS OF STRUCTURE, MORALE, AND ATTITUDE

NORMALIZED WEIGHTS AND THRESHOLDS FOR 1 ADALINE(S) IN THE 10 OF 17 MADALINES

ADA 1	ADA 2	ADA 3	ADA 4	ADA 5	ADA 6	ADA 7	ADA 8	ADA 9	AVERAGE ADA
WEIGHTS									
-0.1237	0.0	0.0	0.0	0.0	0.0	0.0	0.0	0.0	-0.12369
0.0095	0.0	0.0	0.0	0.0	0.0	0.0	0.0	0.0	0.00952
0.0	0.0	0.0	0.0	0.0	0.0	0.0	0.0	0.0	0.0
0.5631	0.0	0.0	0.0	0.0	0.0	0.0	0.0	0.0	0.56314
-0.3853	0.0	0.0	0.0	0.0	0.0	0.0	0.0	0.0	-0.38529
0.1015	0.0	0.0	0.0	0.0	0.0	0.0	0.0	0.0	0.10150
0.4573	0.0	0.0	0.0	0.0	0.0	0.0	0.0	0.0	0.45728
0.2160	0.0	0.0	0.0	0.0	0.0	0.0	0.0	0.0	0.21604
0.0270	0.0	0.0	0.0	0.0	0.0	0.0	0.0	0.0	0.02699
-0.0254	0.0	0.0	0.0	0.0	0.0	0.0	0.0	0.0	-0.02538
-0.3649	0.0	0.0	0.0	0.0	0.0	0.0	0.0	0.0	-0.36489
-0.2418	0.0	0.0	0.0	0.0	0.0	0.0	0.0	0.0	-0.24179
-0.2449	0.0	0.0	0.0	0.0	0.0	0.0	0.0	0.0	-0.24491
THRESHOLDS - SIGNED DISTANCE TO DECISION HYPERPLANES									
-0.9304	0.0	0.0	0.0	0.0	0.0	0.0	0.0	0.0	-0.9304

GROUP-RATTLERS DEPENDENT VARIABLE-ATTITUDE OBJECT CODE '5&3' 5-LEVEL

REALIZATION VARIABLES - STRUCTURE, MORALE, FRUSTRATION, GOAL TYPE, GOAL VALUE, ATTAINMENT, PRESENCE, NUMBER OF TIMES, LAST FRUSTRATION, AVERAGES OVER LAST THREE EVENTS OF STRUCTURE, MORALE, AND ATTITUDE

NORMALIZED WEIGHTS AND THRESHOLDS FOR 1 ADALINE(S) IN THE 11 OF 17 MADALINES

ADA 1	ADA 2	ADA 3	ADA 4	ADA 5	ADA 6	ADA 7	ADA 8	ADA 9	AVERAGE ADA
WEIGHTS									
-0.1237	0.0	0.0	0.0	0.0	0.0	0.0	0.0	0.0	-0.12369
0.0095	0.0	0.0	0.0	0.0	0.0	0.0	0.0	0.0	0.00952
0.0	0.0	0.0	0.0	0.0	0.0	0.0	0.0	0.0	0.0
0.5631	0.0	0.0	0.0	0.0	0.0	0.0	0.0	0.0	0.56314
-0.3853	0.0	0.0	0.0	0.0	0.0	0.0	0.0	0.0	-0.38529
0.1015	0.0	0.0	0.0	0.0	0.0	0.0	0.0	0.0	0.10150
0.4573	0.0	0.0	0.0	0.0	0.0	0.0	0.0	0.0	0.45728
0.2160	0.0	0.0	0.0	0.0	0.0	0.0	0.0	0.0	0.21604
0.0270	0.0	0.0	0.0	0.0	0.0	0.0	0.0	0.0	0.02699
-0.0254	0.0	0.0	0.0	0.0	0.0	0.0	0.0	0.0	-0.02538
-0.3649	0.0	0.0	0.0	0.0	0.0	0.0	0.0	0.0	-0.36489
-0.2418	0.0	0.0	0.0	0.0	0.0	0.0	0.0	0.0	-0.24179
-0.2449	0.0	0.0	0.0	0.0	0.0	0.0	0.0	0.0	-0.24491
THRESHOLDS - SIGNED DISTANCE TO DECISION HYPERPLANES									
-0.9304	0.0	0.0	0.0	0.0	0.0	0.0	0.0	0.0	-0.9304

GROUP-RATTLERS DEPENDENT VARIABLE-ATTITUDE OBJECT CODE '5&3' 5-LEVEL

REALIZATION VARIABLES - STRUCTURE, MORALE, FRUSTRATION, GOAL TYPE, GOAL VALUE, ATTAINMENT, PRESENCE, NUMBER OF TIMES, LAST FRUSTRATION, AVERAGES OVER LAST THREE EVENTS OF STRUCTURE, MORALE, AND ATTITUDE

NORMALIZED WEIGHTS AND THRESHOLDS FOR 1 ADALINE(S) IN THE 12 OF 17 MADALINES

ADA 1	ADA 2	ADA 3	ADA 4	ADA 5	ADA 6	ADA 7	ADA 8	ADA 9	AVERAGE ADA
WEIGHTS									
-0.1237	0.0	0.0	0.0	0.0	0.0	0.0	0.0	0.0	-0.12369
0.0095	0.0	0.0	0.0	0.0	0.0	0.0	0.0	0.0	0.00952
0.0	0.0	0.0	0.0	0.0	0.0	0.0	0.0	0.0	0.0
0.5631	0.0	0.0	0.0	0.0	0.0	0.0	0.0	0.0	0.56314
-0.3853	0.0	0.0	0.0	0.0	0.0	0.0	0.0	0.0	-0.38529
0.1015	0.0	0.0	0.0	0.0	0.0	0.0	0.0	0.0	0.10150
0.4573	0.0	0.0	0.0	0.0	0.0	0.0	0.0	0.0	0.45728
0.2160	0.0	0.0	0.0	0.0	0.0	0.0	0.0	0.0	0.21604
0.0270	0.0	0.0	0.0	0.0	0.0	0.0	0.0	0.0	0.02699
-0.0254	0.0	0.0	0.0	0.0	0.0	0.0	0.0	0.0	-0.02538
-0.3649	0.0	0.0	0.0	0.0	0.0	0.0	0.0	0.0	-0.36489
-0.2418	0.0	0.0	0.0	0.0	0.0	0.0	0.0	0.0	-0.24179
-0.2449	0.0	0.0	0.0	0.0	0.0	0.0	0.0	0.0	-0.24491
THRESHOLDS - SIGNED DISTANCE TO DECISION HYPERPLANES									
-0.9304	0.0	0.0	0.0	0.0	0.0	0.0	0.0	0.0	-0.9304

GROUP-RATTLERS DEPENDENT VARIABLE-ATTITUDE OBJECT CODE '563' 5-LEVEL

REALIZATION VARIABLES - STRUCTURE, MORALE, FRUSTRATION, GOAL TYPE, GOAL VALUE, ATTAINMENT, PRESENCE, NUMBER OF TIMES, LAST FRUSTRATION, AVERAGES OVER LAST THREE EVENTS OF STRUCTURE, MORALE, AND ATTITUDE

NORMALIZED WEIGHTS AND THRESHOLDS FOR 2 ADALINE(S) IN THE 13 OF 17 MADALINES

ADA 1	ADA 2	ADA 3	ADA 4	ADA 5	ADA 6	ADA 7	ADA 8	ADA 9	AVERAGE ADA
WEIGHTS									
-0.3270	-0.1734	0.0	0.0	0.0	0.0	0.0	0.0	0.0	-0.25018
0.2302	-0.1734	0.0	0.0	0.0	0.0	0.0	0.0	0.0	0.02841
0.0	0.0	0.0	0.0	0.0	0.0	0.0	0.0	0.0	0.0
0.3002	-0.0208	0.0	0.0	0.0	0.0	0.0	0.0	0.0	0.13972
-0.5298	0.1296	0.0	0.0	0.0	0.0	0.0	0.0	0.0	-0.20010
0.0515	0.2185	0.0	0.0	0.0	0.0	0.0	0.0	0.0	0.13499
0.1381	-0.4413	0.0	0.0	0.0	0.0	0.0	0.0	0.0	-0.15163
0.4310	0.6104	0.0	0.0	0.0	0.0	0.0	0.0	0.0	0.52069
0.0472	-0.0810	0.0	0.0	0.0	0.0	0.0	0.0	0.0	-0.01691
0.3182	-0.3238	0.0	0.0	0.0	0.0	0.0	0.0	0.0	-0.00530
0.1318	0.3689	0.0	0.0	0.0	0.0	0.0	0.0	0.0	0.25034
-0.0860	-0.1734	0.0	0.0	0.0	0.0	0.0	0.0	0.0	-0.12968
-0.3698	-0.1734	0.0	0.0	0.0	0.0	0.0	0.0	0.0	-0.27157
THRESHOLDS - SIGNED DISTANCE TO DECISION HYPERPLANES									
-0.8726	-0.6104	0.0	0.0	0.0	0.0	0.0	0.0	0.0	-0.7415

GROUP-RATTLERS DEPENDENT VARIABLE-ATTITUDE OBJECT CODE '563' 5-LEVEL

REALIZATION VARIABLES - STRUCTURE, MORALE, FRUSTRATION, GOAL TYPE, GOAL VALUE, ATTAINMENT, PRESENCE, NUMBER OF TIMES, LAST FRUSTRATION, AVERAGES OVER LAST THREE EVENTS OF STRUCTURE, MORALE, AND ATTITUDE

NORMALIZED WEIGHTS AND THRESHOLDS FOR 1 ADALINE(S) IN THE 14 OF 17 MADALINES

ADA 1	ADA 2	ADA 3	ADA 4	ADA 5	ADA 6	ADA 7	ADA 8	ADA 9	AVERAGE ADA
WEIGHTS									
-0.1280	0.0	0.0	0.0	0.0	0.0	0.0	0.0	0.0	-0.12803
-0.1051	0.0	0.0	0.0	0.0	0.0	0.0	0.0	0.0	-0.10512
0.0	0.0	0.0	0.0	0.0	0.0	0.0	0.0	0.0	0.0
0.4573	0.0	0.0	0.0	0.0	0.0	0.0	0.0	0.0	0.45734
-0.1770	0.0	0.0	0.0	0.0	0.0	0.0	0.0	0.0	-0.17699
0.0741	0.0	0.0	0.0	0.0	0.0	0.0	0.0	0.0	0.07408
0.5585	0.0	0.0	0.0	0.0	0.0	0.0	0.0	0.0	0.55845
0.4373	0.0	0.0	0.0	0.0	0.0	0.0	0.0	0.0	0.43733
0.0194	0.0	0.0	0.0	0.0	0.0	0.0	0.0	0.0	0.01944
-0.1785	0.0	0.0	0.0	0.0	0.0	0.0	0.0	0.0	-0.17853
-0.4108	0.0	0.0	0.0	0.0	0.0	0.0	0.0	0.0	-0.41079
-0.0707	0.0	0.0	0.0	0.0	0.0	0.0	0.0	0.0	-0.07069
-0.1321	0.0	0.0	0.0	0.0	0.0	0.0	0.0	0.0	-0.13211
THRESHOLDS - SIGNED DISTANCE TO DECISION HYPERPLANES									
-1.1178	0.0	0.0	0.0	0.0	0.0	0.0	0.0	0.0	-1.1178

GROUP-RATTLERS DEPENDENT VARIABLE-ATTITUDE OBJECT CODE '5&3' 5-LEVEL

REALIZATION VARIABLES - STRUCTURE, MORALE, FRUSTRATION, GOAL TYPE, GOAL VALUE, ATTAINMENT, PRESENCE, NUMBER OF TIMES, LAST FRUSTRATION, AVERAGES OVER LAST THREE EVENTS OF STRUCTURE, MORALE, AND ATTITUDE

NORMALIZED WEIGHTS AND THRESHOLDS FOR 1 ADALINE(S) IN THE 15 OF 17 MADALINES

ADA 1	ADA 2	ADA 3	ADA 4	ADA 5	ADA 6	ADA 7	ADA 8	ADA 9	AVERAGE ADA
WEIGHTS									
-0.1280	0.0	0.0	0.0	0.0	0.0	0.0	0.0	0.0	-0.12803
-0.1051	0.0	0.0	0.0	0.0	0.0	0.0	0.0	0.0	-0.10512
0.0	0.0	0.0	0.0	0.0	0.0	0.0	0.0	0.0	0.0
0.4573	0.0	0.0	0.0	0.0	0.0	0.0	0.0	0.0	0.45734
-0.1770	0.0	0.0	0.0	0.0	0.0	0.0	0.0	0.0	-0.17699
0.0741	0.0	0.0	0.0	0.0	0.0	0.0	0.0	0.0	0.07408
0.5585	0.0	0.0	0.0	0.0	0.0	0.0	0.0	0.0	0.55845
0.4373	0.0	0.0	0.0	0.0	0.0	0.0	0.0	0.0	0.43733
0.0194	0.0	0.0	0.0	0.0	0.0	0.0	0.0	0.0	0.01944
-0.1785	0.0	0.0	0.0	0.0	0.0	0.0	0.0	0.0	-0.17853
-0.4108	0.0	0.0	0.0	0.0	0.0	0.0	0.0	0.0	-0.41079
-0.0707	0.0	0.0	0.0	0.0	0.0	0.0	0.0	0.0	-0.07069
-0.1321	0.0	0.0	0.0	0.0	0.0	0.0	0.0	0.0	-0.13211
THRESHOLDS - SIGNED DISTANCE TO DECISION HYPERPLANES									
-1.1178	0.0	0.0	0.0	0.0	0.0	0.0	0.0	0.0	-1.1178

GROUP-RATTLERS DEPENDENT VARIABLE-ATTITUDE OBJECT CODE '563' 5-LEVEL

REALIZATION VARIABLES - STRUCTURE, MORALE, FRUSTRATION, GOAL TYPE, GOAL VALUE, ATTAINMENT, PRESENCE, NUMBER OF TIMES, LAST FRUSTRATION, AVERAGES OVER LAST THREE EVENTS OF STRUCTURE, MORALE, AND ATTITUDE

NORMALIZED WEIGHTS AND THRESHOLDS FOR 1 ADALINE(S) IN THE 16 OF 17 MADALINES

ADA 1	ADA 2	ADA 3	ADA 4	ADA 5	ADA 6	ADA 7	ADA 8	ADA 9	AVERAGE ADA
WEIGHTS									
-0.1280	0.0	0.0	0.0	0.0	0.0	0.0	0.0	0.0	-0.12803
-0.1051	0.0	0.0	0.0	0.0	0.0	0.0	0.0	0.0	-0.10512
0.0	0.0	0.0	0.0	0.0	0.0	0.0	0.0	0.0	0.0
0.4573	0.0	0.0	0.0	0.0	0.0	0.0	0.0	0.0	0.45734
-0.1770	0.0	0.0	0.0	0.0	0.0	0.0	0.0	0.0	-0.17699
0.0741	0.0	0.0	0.0	0.0	0.0	0.0	0.0	0.0	0.07408
0.5585	0.0	0.0	0.0	0.0	0.0	0.0	0.0	0.0	0.55845
0.4373	0.0	0.0	0.0	0.0	0.0	0.0	0.0	0.0	0.43733
0.0194	0.0	0.0	0.0	0.0	0.0	0.0	0.0	0.0	0.01944
-0.1785	0.0	0.0	0.0	0.0	0.0	0.0	0.0	0.0	-0.17853
-0.4108	0.0	0.0	0.0	0.0	0.0	0.0	0.0	0.0	-0.41079
-0.0707	0.0	0.0	0.0	0.0	0.0	0.0	0.0	0.0	-0.07069
-0.1321	0.0	0.0	0.0	0.0	0.0	0.0	0.0	0.0	-0.13211
THRESHOLDS - SIGNED DISTANCE TO DECISION HYPERPLANES									
-1.1178	0.0	0.0	0.0	0.0	0.0	0.0	0.0	0.0	-1.1178

GROUP-RATTLERS DEPENDENT VARIABLE-ATTITUDE OBJECT CODE '5&3' 5-LEVEL

REALIZATION VARIABLES - STRUCTURE, MORALE, FRUSTRATION, GOAL TYPE, GOAL VALUE, ATTAINMENT, PRESENCE, NUMBER OF TIMES, LAST FRUSTRATION, AVERAGES OVER LAST THREE EVENTS OF STRUCTURE, MORALE, AND ATTITUDE

NORMALIZED WEIGHTS AND THRESHOLDS FOR 1 ADALINE(S) IN THE 17 OF 17 MADALINES

ADA 1	ADA 2	ADA 3	ADA 4	ADA 5	ADA 6	ADA 7	ADA 8	ADA 9	AVERAGE ADA
WEIGHTS									
-0.1280	0.0	0.0	0.0	0.0	0.0	0.0	0.0	0.0	-0.12803
-0.1051	0.0	0.0	0.0	0.0	0.0	0.0	0.0	0.0	-0.10512
0.0	0.0	0.0	0.0	0.0	0.0	0.0	0.0	0.0	0.0
0.4573	0.0	0.0	0.0	0.0	0.0	0.0	0.0	0.0	0.45734
-0.1770	0.0	0.0	0.0	0.0	0.0	0.0	0.0	0.0	-0.17699
0.0741	0.0	0.0	0.0	0.0	0.0	0.0	0.0	0.0	0.07408
0.5585	0.0	0.0	0.0	0.0	0.0	0.0	0.0	0.0	0.55845
0.4373	0.0	0.0	0.0	0.0	0.0	0.0	0.0	0.0	0.43733
0.0194	0.0	0.0	0.0	0.0	0.0	0.0	0.0	0.0	0.01944
-0.1785	0.0	0.0	0.0	0.0	0.0	0.0	0.0	0.0	-0.17853
-0.4108	0.0	0.0	0.0	0.0	0.0	0.0	0.0	0.0	-0.41079
-0.0707	0.0	0.0	0.0	0.0	0.0	0.0	0.0	0.0	-0.07069
-0.1321	0.0	0.0	0.0	0.0	0.0	0.0	0.0	0.0	-0.13211

THRESHOLDS - SIGNED DISTANCE TO DECISION HYPERPLANES

-1.1178	0.0	0.0	0.0	0.0	0.0	0.0	0.0	0.0	-1.1178

GELISIMA CAN CORRECTLY CLASSIFY 38 OF 41 TRAINING PATTERNS ON THE ABOVE VARIABLE

AVERAGE OVER MADALINES OF AVERAGE ADALINES TO INDICATE DEPENDENCES
0.11-0.15 0.0 0.19-0.14 0.02 0.14 0.56 0.01-0.03-0.18-0.16-0.08-0.78

GROUP-RATTLERS DEPENDENT VARIABLE-FRUSTRATION OBJECT CODE '5&3' 5-LEVEL

REALIZATION VARIABLES - STRUCTURE, MORALE, ATTITUDE, GOAL TYPE, GOAL VALUE, ATTAINMENT, PRESENCE, NUMBER OF TIMES, LAST FRUSTRATION, AVERAGES OVER LAST THREE EVENTS OF STRUCTURE, MORALE, AND ATTITUDE

NORMALIZED WEIGHTS AND THRESHOLDS FOR 1 ADALINE(S) IN THE 1 OF 17 MADALINES

ADA 1	ADA 2	ADA 3	ADA 4	ADA 5	ADA 6	ADA 7	ADA 8	ADA 9	AVERAGE ADA
WEIGHTS									
0.1760	0.0	0.0	0.0	0.0	0.0	0.0	0.0	0.0	0.17600
-0.7421	0.0	0.0	0.0	0.0	0.0	0.0	0.0	0.0	-0.74215
0.2908	0.0	0.0	0.0	0.0	0.0	0.0	0.0	0.0	0.29076
0.0	0.0	0.0	0.0	0.0	0.0	0.0	0.0	0.0	0.0
0.0367	0.0	0.0	0.0	0.0	0.0	0.0	0.0	0.0	0.03668
-0.1078	0.0	0.0	0.0	0.0	0.0	0.0	0.0	0.0	-0.10778
-0.0172	0.0	0.0	0.0	0.0	0.0	0.0	0.0	0.0	-0.01723
0.3900	0.0	0.0	0.0	0.0	0.0	0.0	0.0	0.0	0.39002
-0.0731	0.0	0.0	0.0	0.0	0.0	0.0	0.0	0.0	-0.07312
-0.3200	0.0	0.0	0.0	0.0	0.0	0.0	0.0	0.0	-0.31996
0.0444	0.0	0.0	0.0	0.0	0.0	0.0	0.0	0.0	0.04436
0.0515	0.0	0.0	0.0	0.0	0.0	0.0	0.0	0.0	0.05154
0.2366	0.0	0.0	0.0	0.0	0.0	0.0	0.0	0.0	0.23659
THRESHOLDS - SIGNED DISTANCE TO DECISION HYPERPLANES									
-0.1938	0.0	0.0	0.0	0.0	0.0	0.0	0.0	0.0	-0.1938

GROUP-RATTLERS DEPENDENT VARIABLE-FRUSTRATION OBJECT CODE '5&3' 5-LEVEL

REALIZATION VARIABLES - STRUCTURE, MORALE, ATTITUDE,
GOAL TYPE, GOAL VALUE, ATTAINMENT, PRESENCE, NUMBER OF TIMES, LAST FRUSTRATION,
AVERAGES OVER LAST THREE EVENTS OF STRUCTURE, MORALE, AND ATTITUDE

NORMALIZED WEIGHTS AND THRESHOLDS FOR 1 ADALINE(S) IN THE 2 OF 17 MADALINES

ADA 1	ADA 2	ADA 3	ADA 4	ADA 5	ADA 6	ADA 7	ADA 8	ADA 9	AVERAGE ADA
WEIGHTS									
0.1760	0.0	0.0	0.0	0.0	0.0	0.0	0.0	0.0	0.17600
-0.7421	0.0	0.0	0.0	0.0	0.0	0.0	0.0	0.0	-0.74215
0.2908	0.0	0.0	0.0	0.0	0.0	0.0	0.0	0.0	0.29076
0.0	0.0	0.0	0.0	0.0	0.0	0.0	0.0	0.0	0.0
0.0367	0.0	0.0	0.0	0.0	0.0	0.0	0.0	0.0	0.03668
-0.1078	0.0	0.0	0.0	0.0	0.0	0.0	0.0	0.0	-0.10778
-0.0172	0.0	0.0	0.0	0.0	0.0	0.0	0.0	0.0	-0.01723
0.3900	0.0	0.0	0.0	0.0	0.0	0.0	0.0	0.0	0.39002
-0.0731	0.0	0.0	0.0	0.0	0.0	0.0	0.0	0.0	-0.07312
-0.3200	0.0	0.0	0.0	0.0	0.0	0.0	0.0	0.0	-0.31996
0.0444	0.0	0.0	0.0	0.0	0.0	0.0	0.0	0.0	0.04436
0.0515	0.0	0.0	0.0	0.0	0.0	0.0	0.0	0.0	0.05154
0.2366	0.0	0.0	0.0	0.0	0.0	0.0	0.0	0.0	0.23659
THRESHOLDS - SIGNED DISTANCE TO DECISION HYPERPLANES									
-0.1938	0.0	0.0	0.0	0.0	0.0	0.0	0.0	0.0	-0.1938

GROUP-RATTLERS DEPENDENT VARIABLE-FRUSTRATION OBJECT CODE '5&3' 5-LEVEL

REALIZATION VARIABLES - STRUCTURE, MORALE, ATTITUDE,
GOAL TYPE, GOAL VALUE, ATTAINMENT, PRESENCE, NUMBER OF TIMES, LAST FRUSTRATION,
AVERAGES OVER LAST THREE EVENTS OF STRUCTURE, MORALE, AND ATTITUDE

NORMALIZED WEIGHTS AND THRESHOLDS FOR 1 ADALINE(S) IN THE 3 OF 17 MADALINES

ADA 1	ADA 2	ADA 3	ADA 4	ADA 5	ADA 6	ADA 7	ADA 8	ADA 9	AVERAGE ADA
WEIGHTS									
0.1760	0.0	0.0	0.0	0.0	0.0	0.0	0.0	0.0	0.17600
-0.7421	0.0	0.0	0.0	0.0	0.0	0.0	0.0	0.0	-0.74215
0.2908	0.0	0.0	0.0	0.0	0.0	0.0	0.0	0.0	0.29076
0.0	0.0	0.0	0.0	0.0	0.0	0.0	0.0	0.0	0.0
0.0367	0.0	0.0	0.0	0.0	0.0	0.0	0.0	0.0	0.03668
-0.1078	0.0	0.0	0.0	0.0	0.0	0.0	0.0	0.0	-0.10778
-0.0172	0.0	0.0	0.0	0.0	0.0	0.0	0.0	0.0	-0.01723
0.3900	0.0	0.0	0.0	0.0	0.0	0.0	0.0	0.0	0.39002
-0.0731	0.0	0.0	0.0	0.0	0.0	0.0	0.0	0.0	-0.07312
-0.3200	0.0	0.0	0.0	0.0	0.0	0.0	0.0	0.0	-0.31996
0.0444	0.0	0.0	0.0	0.0	0.0	0.0	0.0	0.0	0.04436
0.0515	0.0	0.0	0.0	0.0	0.0	0.0	0.0	0.0	0.05154
0.2366	0.0	0.0	0.0	0.0	0.0	0.0	0.0	0.0	0.23659
THRESHOLDS - SIGNED DISTANCE TO DECISION HYPERPLANES									
-0.1938	0.0	0.0	0.0	0.0	0.0	0.0	0.0	0.0	-0.1938

GROUP-RATTLERS DEPENDENT VARIABLE-FRUSTRATION OBJECT CODE '5&3' 5-LEVEL

REALIZATION VARIABLES - STRUCTURE, MORALE, ATTITUDE,
GOAL TYPE, GOAL VALUE, ATTAINMENT, PRESENCE, NUMBER OF TIMES, LAST FRUSTRATION,
AVERAGES OVER LAST THREE EVENTS OF STRUCTURE, MORALE, AND ATTITUDE

NORMALIZED WEIGHTS AND THRESHOLDS FOR 1 ADALINE(S) IN THE 4 OF 17 MADALINES

ADA 1	ADA 2	ADA 3	ADA 4	ADA 5	ADA 6	ADA 7	ADA 8	ADA 9	AVERAGE ADA
WEIGHTS									
0.1760	0.0	0.0	0.0	0.0	0.0	0.0	0.0	0.0	0.17600
-0.7421	0.0	0.0	0.0	0.0	0.0	0.0	0.0	0.0	-0.74215
0.2908	0.0	0.0	0.0	0.0	0.0	0.0	0.0	0.0	0.29076
0.0	0.0	0.0	0.0	0.0	0.0	0.0	0.0	0.0	0.0
0.0367	0.0	0.0	0.0	0.0	0.0	0.0	0.0	0.0	0.03668
-0.1078	0.0	0.0	0.0	0.0	0.0	0.0	0.0	0.0	-0.10778
-0.0172	0.0	0.0	0.0	0.0	0.0	0.0	0.0	0.0	-0.01723
0.3900	0.0	0.0	0.0	0.0	0.0	0.0	0.0	0.0	0.39002
-0.0731	0.0	0.0	0.0	0.0	0.0	0.0	0.0	0.0	-0.07312
-0.3200	0.0	0.0	0.0	0.0	0.0	0.0	0.0	0.0	-0.31996
0.0444	0.0	0.0	0.0	0.0	0.0	0.0	0.0	0.0	0.04436
0.0515	0.0	0.0	0.0	0.0	0.0	0.0	0.0	0.0	0.05154
0.2366	0.0	0.0	0.0	0.0	0.0	0.0	0.0	0.0	0.23659
THRESHOLDS - SIGNED DISTANCE TO DECISION HYPERPLANES									
-0.1938	0.0	0.0	0.0	0.0	0.0	0.0	0.0	0.0	-0.1938

GROUP-RATTLERS DEPENDENT VARIABLE-FRUSTRATION OBJECT CODE '563' 5-LEVEL

REALIZATION VARIABLES - STRUCTURE, MORALE, ATTITUDE,
GOAL TYPE, GOAL VALUE, ATTAINMENT, PRESENCE, NUMBER OF TIMES, LAST FRUSTRATION,
AVERAGES OVER LAST THREE EVENTS OF STRUCTURE, MORALE, AND ATTITUDE

NORMALIZED WEIGHTS AND THRESHOLDS FOR 1 ADALINE(S) IN THE 5 OF 17 MADALINES

ADA 1	ADA 2	ADA 3	ADA 4	ADA 5	ADA 6	ADA 7	ADA 8	ADA 9	AVERAGE ADA
WEIGHTS									
-0.0655	0.0	0.0	0.0	0.0	0.0	0.0	0.0	0.0	-0.06549
0.0940	0.0	0.0	0.0	0.0	0.0	0.0	0.0	0.0	0.09396
0.2188	0.0	0.0	0.0	0.0	0.0	0.0	0.0	0.0	0.21882
0.0	0.0	0.0	0.0	0.0	0.0	0.0	0.0	0.0	0.0
-0.5184	0.0	0.0	0.0	0.0	0.0	0.0	0.0	0.0	-0.51842
-0.1475	0.0	0.0	0.0	0.0	0.0	0.0	0.0	0.0	-0.14753
-0.1177	0.0	0.0	0.0	0.0	0.0	0.0	0.0	0.0	-0.11775
0.4911	0.0	0.0	0.0	0.0	0.0	0.0	0.0	0.0	0.49110
0.0152	0.0	0.0	0.0	0.0	0.0	0.0	0.0	0.0	0.01515
0.4062	0.0	0.0	0.0	0.0	0.0	0.0	0.0	0.0	0.40615
0.3289	0.0	0.0	0.0	0.0	0.0	0.0	0.0	0.0	0.32894
-0.1415	0.0	0.0	0.0	0.0	0.0	0.0	0.0	0.0	-0.14151
-0.3163	0.0	0.0	0.0	0.0	0.0	0.0	0.0	0.0	-0.31625
THRESHOLDS - SIGNED DISTANCE TO DECISION HYPERPLANES									
-1.1596	0.0	0.0	0.0	0.0	0.0	0.0	0.0	0.0	-1.1596

GROUP-RATTLERS DEPENDENT VARIABLE-FRUSTRATION OBJECT CODE '5&3' 5-LEVEL

REALIZATION VARIABLES - STRUCTURE, MORALE, ATTITUDE, GOAL TYPE, GOAL VALUE, ATTAINMENT, PRESENCE, NUMBER OF TIMES, LAST FRUSTRATION, AVERAGES OVER LAST THREE EVENTS OF STRUCTURE, MORALE, AND ATTITUDE

NORMALIZED WEIGHTS AND THRESHOLDS FOR 1 ADALINE(S) IN THE 6 OF 17 MADALINES

ADA 1	ADA 2	ADA 3	ADA 4	ADA 5	ADA 6	ADA 7	ADA 8	ADA 9	AVERAGE ADA
WEIGHTS									
-0.0320	0.0	0.0	0.0	0.0	0.0	0.0	0.0	0.0	-0.03202
-0.4394	0.0	0.0	0.0	0.0	0.0	0.0	0.0	0.0	-0.43935
0.2649	0.0	0.0	0.0	0.0	0.0	0.0	0.0	0.0	0.26494
0.0	0.0	0.0	0.0	0.0	0.0	0.0	0.0	0.0	0.0
0.2128	0.0	0.0	0.0	0.0	0.0	0.0	0.0	0.0	0.21276
-0.0102	0.0	0.0	0.0	0.0	0.0	0.0	0.0	0.0	-0.01023
0.0475	0.0	0.0	0.0	0.0	0.0	0.0	0.0	0.0	0.04749
0.5557	0.0	0.0	0.0	0.0	0.0	0.0	0.0	0.0	0.55567
-0.0367	0.0	0.0	0.0	0.0	0.0	0.0	0.0	0.0	-0.03671
-0.5110	0.0	0.0	0.0	0.0	0.0	0.0	0.0	0.0	-0.51101
-0.2229	0.0	0.0	0.0	0.0	0.0	0.0	0.0	0.0	-0.22286
0.1023	0.0	0.0	0.0	0.0	0.0	0.0	0.0	0.0	0.10229
0.2382	0.0	0.0	0.0	0.0	0.0	0.0	0.0	0.0	0.23821
THRESHOLDS - SIGNED DISTANCE TO DECISION HYPERPLANES									
-0.4469	0.0	0.0	0.0	0.0	0.0	0.0	0.0	0.0	-0.4469

GROUP-RATTLERS DEPENDENT VARIABLE-FRUSTRATION OBJECT CODE '5&3' 5-LEVEL

REALIZATION VARIABLES - STRUCTURE, MORALE, ATTITUDE, GOAL TYPE, GOAL VALUE, ATTAINMENT, PRESENCE, NUMBER OF TIMES, LAST FRUSTRATION, AVERAGES OVER LAST THREE EVENTS OF STRUCTURE, MORALE, AND ATTITUDE

NORMALIZED WEIGHTS AND THRESHOLDS FOR 1 ADALINE(S) IN THE 7 OF 17 MADALINES

ADA 1	ADA 2	ADA 3	ADA 4	ADA 5	ADA 6	ADA 7	ADA 8	ADA 9	AVERAGE ADA
WEIGHTS									
-0.0320	0.0	0.0	0.0	0.0	0.0	0.0	0.0	0.0	-0.03202
-0.4394	0.0	0.0	0.0	0.0	0.0	0.0	0.0	0.0	-0.43935
0.2649	0.0	0.0	0.0	0.0	0.0	0.0	0.0	0.0	0.26494
0.0	0.0	0.0	0.0	0.0	0.0	0.0	0.0	0.0	0.0
0.2128	0.0	0.0	0.0	0.0	0.0	0.0	0.0	0.0	0.21276
-0.0102	0.0	0.0	0.0	0.0	0.0	0.0	0.0	0.0	-0.01023
0.0475	0.0	0.0	0.0	0.0	0.0	0.0	0.0	0.0	0.04749
0.5567	0.0	0.0	0.0	0.0	0.0	0.0	0.0	0.0	0.55567
-0.0367	0.0	0.0	0.0	0.0	0.0	0.0	0.0	0.0	-0.03671
-0.5110	0.0	0.0	0.0	0.0	0.0	0.0	0.0	0.0	-0.51101
-0.2229	0.0	0.0	0.0	0.0	0.0	0.0	0.0	0.0	-0.22286
0.1023	0.0	0.0	0.0	0.0	0.0	0.0	0.0	0.0	0.10229
0.2382	0.0	0.0	0.0	0.0	0.0	0.0	0.0	0.0	0.23821
THRESHOLDS - SIGNED DISTANCE TO DECISION HYPERPLANES									
-0.4469	0.0	0.0	0.0	0.0	0.0	0.0	0.0	0.0	-0.4469

GROUP-RATTLERS DEPENDENT VARIABLE-FRUSTRATION OBJECT CODE '583' 5-LEVEL

REALIZATION VARIABLES - STRUCTURE, MORALE, ATTITUDE,
GOAL TYPE, GOAL VALUE, ATTAINMENT, PRESENCE, NUMBER OF TIMES, LAST FRUSTRATION,
AVERAGES OVER LAST THREE EVENTS OF STRUCTURE, MORALE, AND ATTITUDE

NORMALIZED WEIGHTS AND THRESHOLDS FOR 1 ADALINE(S) IN THE 8 OF 17 MADALINES

ADA 1	ADA 2	ADA 3	ADA 4	ADA 5	ADA 6	ADA 7	ADA 8	ADA 9	AVERAGE ADA
WEIGHTS									
-0.0320	0.0	0.0	0.0	0.0	0.0	0.0	0.0	0.0	-0.03202
-0.4394	0.0	0.0	0.0	0.0	0.0	0.0	0.0	0.0	-0.43935
0.2649	0.0	0.0	0.0	0.0	0.0	0.0	0.0	0.0	0.26494
0.0	0.0	0.0	0.0	0.0	0.0	0.0	0.0	0.0	0.0
0.2128	0.0	0.0	0.0	0.0	0.0	0.0	0.0	0.0	0.21276
-0.0102	0.0	0.0	0.0	0.0	0.0	0.0	0.0	0.0	-0.01023
0.0475	0.0	0.0	0.0	0.0	0.0	0.0	0.0	0.0	0.04749
0.5557	0.0	0.0	0.0	0.0	0.0	0.0	0.0	0.0	0.55567
-0.0367	0.0	0.0	0.0	0.0	0.0	0.0	0.0	0.0	-0.03671
-0.5110	0.0	0.0	0.0	0.0	0.0	0.0	0.0	0.0	-0.51101
-0.2229	0.0	0.0	0.0	0.0	0.0	0.0	0.0	0.0	-0.22286
0.1023	0.0	0.0	0.0	0.0	0.0	0.0	0.0	0.0	0.10229
0.2382	0.0	0.0	0.0	0.0	0.0	0.0	0.0	0.0	0.23821
THRESHOLDS - SIGNED DISTANCE TO DECISION HYPERPLANES									
-0.4469	0.0	0.0	0.0	0.0	0.0	0.0	0.0	0.0	-0.4469

GROUP-RATTLERS DEPENDENT VARIABLE—FRUSTRATION OBJECT CODE '563' 5-LEVEL

REALIZATION VARIABLES - STRUCTURE, MORALE, ATTITUDE, GOAL TYPE, GOAL VALUE, ATTAINMENT, PRESENCE, NUMBER OF TIMES, LAST FRUSTRATION, AVERAGES OVER LAST THREE EVENTS OF STRUCTURE, MORALE, AND ATTITUDE

NORMALIZED WEIGHTS AND THRESHOLDS FOR 3 ADALINE(S) IN THE 9 OF 17 MADALINES

ADA 1	ADA 2	ADA 3	ADA 4	ADA 5	ADA 6	ADA 7	ADA 8	ADA 9	AVERAGE ADA
WEIGHTS									
-0.0057	-0.1645	-0.1373	0.0	0.0	0.0	0.0	0.0	0.0	-0.10252
-0.1013	-0.1459	-0.1110	0.0	0.0	0.0	0.0	0.0	0.0	-0.11941
-0.3176	-0.3496	-0.5422	0.0	0.0	0.0	0.0	0.0	0.0	-0.40311
0.0	0.0	0.0	0.0	0.0	0.0	0.0	0.0	0.0	0.0
0.5163	0.3329	0.2362	0.0	0.0	0.0	0.0	0.0	0.0	0.36182
-0.1314	-0.1213	-0.0278	0.0	0.0	0.0	0.0	0.0	0.0	-0.09352
-0.4647	-0.0231	0.0030	0.0	0.0	0.0	0.0	0.0	0.0	-0.16160
0.3348	0.7948	0.6867	0.0	0.0	0.0	0.0	0.0	0.0	0.60541
-0.0476	0.0035	0.0064	0.0	0.0	0.0	0.0	0.0	0.0	-0.01258
-0.2139	-0.1367	0.1881	0.0	0.0	0.0	0.0	0.0	0.0	-0.05416
0.0882	-0.2219	-0.3086	0.0	0.0	0.0	0.0	0.0	0.0	-0.14743
0.4533	-0.0444	-0.1230	0.0	0.0	0.0	0.0	0.0	0.0	0.09529
0.1255	-0.0421	-0.0319	0.0	0.0	0.0	0.0	0.0	0.0	0.01712
THRESHOLDS - SIGNED DISTANCE TO DECISION HYPERPLANES									
-0.4924	-0.8934	-0.8516	0.0	0.0	0.0	0.0	0.0	0.0	-0.7458

GROUP—RATTLERS DEPENDENT VARIABLE—FRUSTRATION OBJECT CODE '583' 5—LEVEL

REALIZATION VARIABLES - STRUCTURE, MORALE, ATTITUDE,
GOAL TYPE, GOAL VALUE, ATTAINMENT, PRESENCE, NUMBER OF TIMES, LAST FRUSTRATION,
AVERAGES OVER LAST THREE EVENTS OF STRUCTURE, MORALE, AND ATTITUDE

NORMALIZED WEIGHTS AND THRESHOLDS FOR 3 ADALINE(S) IN THE 10 OF 17 MADALINES

ADA 1	ADA 2	ADA 3	ADA 4	ADA 5	ADA 6	ADA 7	ADA 8	ADA 9	AVERAGE ADA
WEIGHTS									
-0.0670	-0.2499	-0.2384	0.0	0.0	0.0	0.0	0.0	0.0	-0.18511
-0.2928	-0.0174	0.0097	0.0	0.0	0.0	0.0	0.0	0.0	-0.10018
0.6842	0.1744	0.1292	0.0	0.0	0.0	0.0	0.0	0.0	0.32927
0.0	0.0	0.0	0.0	0.0	0.0	0.0	0.0	0.0	0.0
-0.3015	-0.3237	-0.3147	0.0	0.0	0.0	0.0	0.0	0.0	-0.31326
0.0378	-0.0268	-0.0225	0.0	0.0	0.0	0.0	0.0	0.0	-0.00384
0.3747	0.1157	0.1064	0.0	0.0	0.0	0.0	0.0	0.0	0.19892
0.2306	0.7597	0.7829	0.0	0.0	0.0	0.0	0.0	0.0	0.59105
0.0570	0.0001	-0.0124	0.0	0.0	0.0	0.0	0.0	0.0	0.01488
-0.1698	0.0276	0.0170	0.0	0.0	0.0	0.0	0.0	0.0	-0.04173
-0.2823	-0.1361	-0.1449	0.0	0.0	0.0	0.0	0.0	0.0	-0.18775
-0.2008	-0.3593	-0.3527	0.0	0.0	0.0	0.0	0.0	0.0	-0.30427
-0.0599	-0.2499	-0.2384	0.0	0.0	0.0	0.0	0.0	0.0	-0.18272
THRESHOLDS — SIGNED DISTANCE TO DECISION HYPERPLANES									
-0.4559	-0.7597	-0.7829	0.0	0.0	0.0	0.0	0.0	0.0	-0.6661

GROUP-RATTLERS DEPENDENT VARIABLE-FRUSTRATION OBJECT CODE '5&3' 5-LEVEL

REALIZATION VARIABLES - STRUCTURE, MORALE, ATTITUDE,
GOAL TYPE, GOAL VALUE, ATTAINMENT, PRESENCE, NUMBER OF TIMES, LAST FRUSTRATION,
AVERAGES OVER LAST THREE EVENTS OF STRUCTURE, MORALE, AND ATTITUDE

NORMALIZED WEIGHTS AND THRESHOLDS FOR 3 ADALINE(S) IN THE 11 OF 17 MADALINES

ADA 1	ADA 2	ADA 3	ADA 4	ADA 5	ADA 6	ADA 7	ADA 8	ADA 9	AVERAGE ADA
WEIGHTS									
-0.0670	-0.2499	-0.2384	0.0	0.0	0.0	0.0	0.0	0.0	-0.18511
-0.2928	-0.0174	0.0097	0.0	0.0	0.0	0.0	0.0	0.0	-0.10018
0.6842	0.1744	0.1292	0.0	0.0	0.0	0.0	0.0	0.0	0.32927
0.0	0.0	0.0	0.0	0.0	0.0	0.0	0.0	0.0	0.0
-0.3015	-0.3237	-0.3147	0.0	0.0	0.0	0.0	0.0	0.0	-0.31326
0.0378	-0.0268	-0.0225	0.0	0.0	0.0	0.0	0.0	0.0	-0.00384
0.3747	0.1157	0.1064	0.0	0.0	0.0	0.0	0.0	0.0	0.19892
0.2306	0.7597	0.7829	0.0	0.0	0.0	0.0	0.0	0.0	0.59105
0.0570	0.0001	-0.0124	0.0	0.0	0.0	0.0	0.0	0.0	0.01488
-0.1698	0.0276	0.0170	0.0	0.0	0.0	0.0	0.0	0.0	-0.04173
-0.2823	-0.1361	-0.1449	0.0	0.0	0.0	0.0	0.0	0.0	-0.18775
-0.2008	-0.3593	-0.3527	0.0	0.0	0.0	0.0	0.0	0.0	-0.30427
-0.0599	-0.2499	-0.2384	0.0	0.0	0.0	0.0	0.0	0.0	-0.18272
THRESHOLDS - SIGNED DISTANCE TO DECISION HYPERPLANES									
-0.4559	-0.7597	-0.7829	0.0	0.0	0.0	0.0	0.0	0.0	-0.6661

GROUP-RATTLERS DEPENDENT VARIABLE-FRUSTRATION OBJECT CODE '5&3' 5-LEVEL

REALIZATION VARIABLES - STRUCTURE, MORALE, ATTITUDE, GOAL TYPE, GOAL VALUE, ATTAINMENT, PRESENCE, NUMBER OF TIMES, LAST FRUSTRATION, AVERAGES OVER LAST THREE EVENTS OF STRUCTURE, MORALE, AND ATTITUDE

NORMALIZED WEIGHTS AND THRESHOLDS FOR 3 ADALINE(S) IN THE 12 OF 17 MADALINES

ADA 1	ADA 2	ADA 3	ADA 4	ADA 5	ADA 6	ADA 7	ADA 8	ADA 9	AVERAGE ADA
WEIGHTS									
-0.0670	-0.2499	-0.2384	0.0	0.0	0.0	0.0	0.0	0.0	-0.18511
-0.2928	-0.0174	0.0097	0.0	0.0	0.0	0.0	0.0	0.0	-0.10018
0.6842	0.1744	0.1292	0.0	0.0	0.0	0.0	0.0	0.0	0.32927
0.0	0.0	0.0	0.0	0.0	0.0	0.0	0.0	0.0	0.0
-0.3015	-0.3237	-0.3147	0.0	0.0	0.0	0.0	0.0	0.0	-0.31326
0.0378	-0.0268	-0.0225	0.0	0.0	0.0	0.0	0.0	0.0	-0.00384
0.3747	0.1157	0.1064	0.0	0.0	0.0	0.0	0.0	0.0	0.19892
0.2306	0.7597	0.7829	0.0	0.0	0.0	0.0	0.0	0.0	0.59105
0.0570	0.0001	-0.0124	0.0	0.0	0.0	0.0	0.0	0.0	0.01488
-0.1698	0.0276	0.0170	0.0	0.0	0.0	0.0	0.0	0.0	-0.04173
-0.2823	-0.1361	-0.1449	0.0	0.0	0.0	0.0	0.0	0.0	-0.18775
-0.2008	-0.3593	-0.3527	0.0	0.0	0.0	0.0	0.0	0.0	-0.30427
-0.0599	-0.2499	-0.2384	0.0	0.0	0.0	0.0	0.0	0.0	-0.18272
THRESHOLDS - SIGNED DISTANCE TO DECISION HYPERPLANES									
-0.4559	-0.7597	-0.7829	0.0	0.0	0.0	0.0	0.0	0.0	-0.6661

GROUP-RATTLERS DEPENDENT VARIABLE-FRUSTRATION OBJECT CODE '5&3' 5-LEVEL

REALIZATION VARIABLES - STRUCTURE, MORALE, ATTITUDE, GOAL TYPE, GOAL VALUE, ATTAINMENT, PRESENCE, NUMBER OF TIMES, LAST FRUSTRATION, AVERAGES OVER LAST THREE EVENTS OF STRUCTURE, MORALE, AND ATTITUDE

NORMALIZED WEIGHTS AND THRESHOLDS FOR 4 ADALINE(S) IN THE 13 OF 17 MADALINES

ADA 1	ADA 2	ADA 3	ADA 4	ADA 5	ADA 6	ADA 7	ADA 8	ADA 9	AVERAGE ADA
WEIGHTS									
-0.1655	-0.2417	-0.3181	-0.3550	0.0	0.0	0.0	0.0	0.0	-0.27004
-0.4281	-0.2417	-0.3181	-0.3550	0.0	0.0	0.0	0.0	0.0	-0.33570
0.6684	0.5186	0.2107	0.2207	0.0	0.0	0.0	0.0	0.0	0.40458
0.0	0.0	0.0	0.0	0.0	0.0	0.0	0.0	0.0	0.0
-0.1472	-0.0580	-0.0469	-0.1808	0.0	0.0	0.0	0.0	0.0	-0.10822
-0.0850	0.2148	-0.0116	0.0411	0.0	0.0	0.0	0.0	0.0	0.03983
-0.4352	0.3679	0.1286	0.1731	0.0	0.0	0.0	0.0	0.0	0.05860
0.1466	0.4902	0.7783	0.7008	0.0	0.0	0.0	0.0	0.0	0.52895
0.0932	-0.0861	0.0604	-0.0303	0.0	0.0	0.0	0.0	0.0	0.00927
0.2942	-0.1990	-0.0699	-0.0108	0.0	0.0	0.0	0.0	0.0	0.00361
-0.0719	0.0462	-0.0318	-0.0857	0.0	0.0	0.0	0.0	0.0	-0.03578
-0.0323	-0.2857	-0.1339	0.0976	0.0	0.0	0.0	0.0	0.0	-0.08857
-0.0383	-0.2417	-0.3181	-0.3550	0.0	0.0	0.0	0.0	0.0	-0.23825
THRESHOLDS - SIGNED DISTANCE TO DECISION HYPERPLANES									
-0.4864	-0.4902	-0.7783	-0.7008	0.0	0.0	0.0	0.0	0.0	-0.6139

GROUP-RATTLERS DEPENDENT VARIABLE-FRUSTRATION OBJECT CODE '5&3' 5-LEVEL

REALIZATION VARIABLES - STRUCTURE, MORALE, ATTITUDE,
GOAL TYPE, GOAL VALUE, ATTAINMENT, PRESENCE, NUMBER OF TIMES, LAST FRUSTRATION,
AVERAGES OVER LAST THREE EVENTS OF STRUCTURE, MORALE, AND ATTITUDE

NORMALIZED WEIGHTS AND THRESHOLDS FOR 1 ADALINE(S) IN THE 14 OF 17 MADALINES

ADA 1	ADA 2	ADA 3	ADA 4	ADA 5	ADA 6	ADA 7	ADA 8	ADA 9	AVERAGE ADA
WEIGHTS									
-0.0127	0.0	0.0	0.0	0.0	0.0	0.0	0.0	0.0	-0.01274
0.1745	0.0	0.0	0.0	0.0	0.0	0.0	0.0	0.0	0.17448
-0.0140	0.0	0.0	0.0	0.0	0.0	0.0	0.0	0.0	-0.01405
0.0	0.0	0.0	0.0	0.0	0.0	0.0	0.0	0.0	0.0
-0.2463	0.0	0.0	0.0	0.0	0.0	0.0	0.0	0.0	-0.24627
0.0780	0.0	0.0	0.0	0.0	0.0	0.0	0.0	0.0	0.07799
0.8083	0.0	0.0	0.0	0.0	0.0	0.0	0.0	0.0	0.80828
0.2593	0.0	0.0	0.0	0.0	0.0	0.0	0.0	0.0	0.25930
-0.0186	0.0	0.0	0.0	0.0	0.0	0.0	0.0	0.0	-0.01864
-0.3676	0.0	0.0	0.0	0.0	0.0	0.0	0.0	0.0	-0.36764
-0.1831	0.0	0.0	0.0	0.0	0.0	0.0	0.0	0.0	-0.18314
-0.0833	0.0	0.0	0.0	0.0	0.0	0.0	0.0	0.0	-0.08330
-0.0770	0.0	0.0	0.0	0.0	0.0	0.0	0.0	0.0	-0.07700
THRESHOLDS - SIGNED DISTANCE TO DECISION HYPERPLANES									
-0.5238	0.0	0.0	0.0	0.0	0.0	0.0	0.0	0.0	-0.5238

GROUP—RATTLERS DEPENDENT VARIABLE—FRUSTRATION OBJECT CODE '5&3' 5—LEVEL

REALIZATION VARIABLES — STRUCTURE, MORALE, ATTITUDE,
GOAL TYPE, GOAL VALUE, ATTAINMENT, PRESENCE, NUMBER OF TIMES, LAST FRUSTRATION,
AVERAGES OVER LAST THREE EVENTS OF STRUCTURE, MORALE, AND ATTITUDE

NORMALIZED WEIGHTS AND THRESHOLDS FOR 1 ADALINE(S) IN THE 15 OF 17 MADALINES

ADA 1	ADA 2	ADA 3	ADA 4	ADA 5	ADA 6	ADA 7	ADA 8	ADA 9	AVERAGE ADA
WEIGHTS									
-0.0127	0.0	0.0	0.0	0.0	0.0	0.0	0.0	0.0	-0.01274
0.1745	0.0	0.0	0.0	0.0	0.0	0.0	0.0	0.0	0.17448
-0.0140	0.0	0.0	0.0	0.0	0.0	0.0	0.0	0.0	-0.01405
0.0	0.0	0.0	0.0	0.0	0.0	0.0	0.0	0.0	0.0
-0.2463	0.0	0.0	0.0	0.0	0.0	0.0	0.0	0.0	-0.24627
0.0780	0.0	0.0	0.0	0.0	0.0	0.0	0.0	0.0	0.07799
0.8083	0.0	0.0	0.0	0.0	0.0	0.0	0.0	0.0	0.80828
0.2593	0.0	0.0	0.0	0.0	0.0	0.0	0.0	0.0	0.25930
-0.0186	0.0	0.0	0.0	0.0	0.0	0.0	0.0	0.0	-0.01864
-0.3676	0.0	0.0	0.0	0.0	0.0	0.0	0.0	0.0	-0.36764
-0.1831	0.0	0.0	0.0	0.0	0.0	0.0	0.0	0.0	-0.18314
-0.0833	0.0	0.0	0.0	0.0	0.0	0.0	0.0	0.0	-0.08330
-0.0770	0.0	0.0	0.0	0.0	0.0	0.0	0.0	0.0	-0.07700
THRESHOLDS — SIGNED DISTANCE TO DECISION HYPERPLANES									
-0.5238	0.0	0.0	0.0	0.0	0.0	0.0	0.0	0.0	-0.5238

GROUP-RATTLERS DEPENDENT VARIABLE-FRUSTRATION OBJECT CODE '5&3' 5-LEVEL

REALIZATION VARIABLES - STRUCTURE, MORALE, ATTITUDE, GOAL TYPE, GOAL VALUE, ATTAINMENT, PRESENCE, NUMBER OF TIMES, LAST FRUSTRATION, AVERAGES OVER LAST THREE EVENTS OF STRUCTURE, MORALE, AND ATTITUDE

NORMALIZED WEIGHTS AND THRESHOLDS FOR 1 ADALINE(S) IN THE 16 OF 17 MADALINES

ADA 1	ADA 2	ADA 3	ADA 4	ADA 5	ADA 6	ADA 7	ADA 8	ADA 9	AVERAGE ADA
WEIGHTS									
-0.0127	0.0	0.0	0.0	0.0	0.0	0.0	0.0	0.0	-0.01274
0.1745	0.0	0.0	0.0	0.0	0.0	0.0	0.0	0.0	0.17448
-0.0140	0.0	0.0	0.0	0.0	0.0	0.0	0.0	0.0	-0.01405
0.0	0.0	0.0	0.0	0.0	0.0	0.0	0.0	0.0	0.0
-0.2463	0.0	0.0	0.0	0.0	0.0	0.0	0.0	0.0	-0.24627
0.0780	0.0	0.0	0.0	0.0	0.0	0.0	0.0	0.0	0.07799
0.8083	0.0	0.0	0.0	0.0	0.0	0.0	0.0	0.0	0.80828
0.2593	0.0	0.0	0.0	0.0	0.0	0.0	0.0	0.0	0.25930
-0.0186	0.0	0.0	0.0	0.0	0.0	0.0	0.0	0.0	-0.01864
-0.3676	0.0	0.0	0.0	0.0	0.0	0.0	0.0	0.0	-0.36764
-0.1831	0.0	0.0	0.0	0.0	0.0	0.0	0.0	0.0	-0.18314
-0.0833	0.0	0.0	0.0	0.0	0.0	0.0	0.0	0.0	-0.08330
-0.0770	0.0	0.0	0.0	0.0	0.0	0.0	0.0	0.0	-0.07700
THRESHOLDS - SIGNED DISTANCE TO DECISION HYPERPLANES									
-0.5238	0.0	0.0	0.0	0.0	0.0	0.0	0.0	0.0	-0.5238

GROUP-RATTLERS DEPENDENT VARIABLE-FRUSTRATION OBJECT CODE '563' 5-LEVEL

REALIZATION VARIABLES - STRUCTURE, MORALE, ATTITUDE,
GOAL TYPE, GOAL VALUE, ATTAINMENT, PRESENCE, NUMBER OF TIMES, LAST FRUSTRATION,
AVERAGES OVER LAST THREE EVENTS OF STRUCTURE, MORALE, AND ATTITUDE

NORMALIZED WEIGHTS AND THRESHOLDS FOR 1 ADALINE(S) IN THE 17 OF 17 MADALINES

ADA 1	ADA 2	ADA 3	ADA 4	ADA 5	ADA 6	ADA 7	ADA 8	ADA 9	AVERAGE ADA
WEIGHTS									
-0.0127	0.0	0.0	0.0	0.0	0.0	0.0	0.0	0.0	-0.01274
0.1745	0.0	0.0	0.0	0.0	0.0	0.0	0.0	0.0	0.17448
-0.0140	0.0	0.0	0.0	0.0	0.0	0.0	0.0	0.0	-0.01405
0.0	0.0	0.0	0.0	0.0	0.0	0.0	0.0	0.0	0.0
-0.2463	0.0	0.0	0.0	0.0	0.0	0.0	0.0	0.0	-0.24627
0.0780	0.0	0.0	0.0	0.0	0.0	0.0	0.0	0.0	0.07799
0.8083	0.0	0.0	0.0	0.0	0.0	0.0	0.0	0.0	0.80828
0.2593	0.0	0.0	0.0	0.0	0.0	0.0	0.0	0.0	0.25930
-0.0186	0.0	0.0	0.0	0.0	0.0	0.0	0.0	0.0	-0.01864
-0.3676	0.0	0.0	0.0	0.0	0.0	0.0	0.0	0.0	-0.36764
-0.1831	0.0	0.0	0.0	0.0	0.0	0.0	0.0	0.0	-0.18314
-0.0833	0.0	0.0	0.0	0.0	0.0	0.0	0.0	0.0	-0.08330
-0.0770	0.0	0.0	0.0	0.0	0.0	0.0	0.0	0.0	-0.07700

THRESHOLDS - SIGNED DISTANCE TO DECISION HYPERPLANES

-0.5238	0.0	0.0	0.0	0.0	0.0	0.0	0.0	0.0	-0.5238

GELISIMA CAN CORRECTLY CLASSIFY 40 OF 41 TRAINING PATTERNS ON THE ABOVE VARIABLE

AVERAGE OVER MADALINES OF AVERAGE ADALINES TO INDICATE DEPENDENCES
0.03-0.25 0.18 0.0 -0.08-0.02 0.22 0.45-0.02-0.24-0.10-0.05 0.02-0.51