INFORMATION TO USERS

This material was produced from a microfilm copy of the original document. While the most advanced technological means to photograph and reproduce this document have been used, the quality is heavily dependent upon the quality of the original submitted.

The following explanation of techniques is provided to help you understand markings or patterns which may appear on this reproduction.

1. The sign or "target" for pages apparently lacking from the document photographed is "Missing Page(s)". If it was possible to obtain the missing page(s) or section, they are spliced into the film along with adjacent pages. This may have necessitated cutting thru an image and duplicating adjacent pages to insure you complete continuity.

2. When an image on the film is obliterated with a large round black mark, it is an indication that the photographer suspected that the copy may have moved during exposure and thus cause a blurred image. You will find a good image of the page in the adjacent frame.

3. When a map, drawing or chart, etc., was part of the material being photographed the photographer followed a definite method in "sectioning" the material. It is customary to begin photoing at the upper left hand corner of a large sheet and to continue photoing from left to right in equal sections with a small overlap. If necessary, sectioning is continued again — beginning below the first row and continuing on until complete.

4. The majority of users indicate that the textual content is of greatest value, however, a somewhat higher quality reproduction could be made from "photographs" if essential to the understanding of the dissertation. Silver prints of "photographs" may be ordered at additional charge by writing the Order Department, giving the catalog number, title, author and specific pages you wish reproduced.

5. PLEASE NOTE: Some pages may have indistinct print. Filmed as received.

Xerox University Microfilms
300 North Zeab Road
Ann Arbor, Michigan 48106

Downloaded from SHAREOK. Persistent Handle URL: https://hdl.handle.net/11244/3772

74-21,995

STURGEON, James Ivan, 1945-
JOINT VENTURES IN THE INTERNATIONAL PETROLEUM INDUSTRY: EXPLORATION AND DRILLING.

The University of Oklahoma, Ph.D., 1974
Economics, general

University Microfilms, A XEROX Company, Ann Arbor, Michigan

© 1974

JAMES IVAN STURGEON

ALL RIGHTS RESERVED

THIS DISSERTATION HAS BEEN MICROFILMED EXACTLY AS RECEIVED.

THE UNIVERSITY OF OKLAHOMA

GRADUATE COLLEGE

JOINT VENTURES IN THE INTERNATIONAL PETROLEUM INDUSTRY: EXPLORATION AND DRILLING

A DISSERTATION

SUBMITTED TO THE GRADUATE FACULTY

in partial fulfillment of the requirements for the

degree of

DOCTOR OF PHILOSOPHY

BY

JAMES I. STURGEON

Norman, Oklahoma

1974

JOINT VENTURES IN THE INTERNATIONAL PETROLEUM

INDUSTRY: EXPLORATION AND DRILLING

APPROVED BY

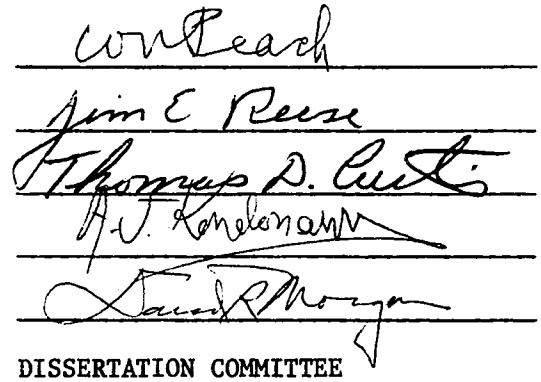

DISSERTATION COMMITTEE

ACKNOWLEDGEMENTS

This study is submitted with appreciative acknowledgements;

To Dr. W. Nelson Peach, George Lynn Cross Research Professor of Economics, for supervision of the study;

To other committee members, Dr. Jim E. Reese, David Ross Boyd Professor of Economics, Dr. Alexander J. Kondonassis, David Ross Boyd Professor of Economics, Dr. Thomas D. Curtis, Associate Professor of Economics, and Dr. David R. Morgan, Associate Professor of Political Science, for their advice and suggestions.

To Maribeth Sturgeon for her assistance in editing the manuscript.

TABLE OF CONTENTS

		Page
ACKNOWLEDGEMENTS		iv
LIST OF TABLES		vii
LIST OF FIGURES		xi
Chapter		
I.	INTRODUCTION	1
	Framework and Scope	
	Sources	
	Procedure	
II.	SURVEY OF THE LITERATURE	14
	Industrial Organization Literature	
	Petroleum Industry Literature	
	The View of Industry	
	The Antitrust View	
III.	MAGNITUDE, PARTICIPATION AND CONTROL OF JOINT VENTURES	39
	Joint Activity Characteristics	
	Joint Exploration Activities	
	Joint Concession Activities	
	Joint Drilling Activities	
	Joint Discoveries	
	Magnitude	
	Participation	
	International Majors	
	International Minors	
	Local Private Capital	
	Local Governments	
	Non-Host Governments	
	"Others"	
	Individual Company Participation	

Chapter Page

Control
International Majors
International Minors
"Miscellaneous"
Summary

IV. JOINT VENTURE PARTICIPATION PATTERNS 94

International Majors
Majors and Local Private Capital
Majors and Governments
International Minors
Minors and Local Private Capital and Governments
International Majors and Minors
Consistent Partnerships
Joint Venture Evolution

V. JOINT OWNERSHIP OF THE MEANS OF PRODUCTION IN THE INTERNATIONAL PETROLEUM INDUSTRY 154

Joint Venture Magnitude
International Majors
International Minors
International Majors and Minors
Order and Organization

VI. SUMMARY AND CONCLUSIONS 190

APPENDIX 196

BIBLIOGRAPHY 451

LIST OF TABLES

Table		Page
1.	Number and Size of Joint Concessions in Ten Geographic Areas, 1957-1971	53
2.	Exploration and Drilling Joint Ventures, by Type of Activity and Area, 1957-1971	59
3.	Participation in Joint Activities, Ten Areas, 1957-1971	60
4.	Joint Ventures and Joint Activities by Geographic Area, by Type of Activity, and by Participant, 1957-1971	66
5.	Joint Venture Participation by Company and by Geographic Area, 1957-1971	77
6.	Control of Joint Ventures and Joint Activities, by Participant Group and Geographic Area, 1957-1971	83
7.	Joint Venture Concessions by Area and Participant Control, 1957-1971	86
8.	Joint Venture Control, by Group Participant and Area, 1957-1971	88
9.	Joint Ventures by Type of Participant and by Type of Activity, Ten Areas, 1957-1971	96
10.	Illustrative Joint Ventures Involving Two International Majors, 1957-1971	98
11.	Illustrative Joint Ventures Involving Three or Four International Majors, 1957-1971	100
12.	Average Number of Participants In Joint Ventures For the International Majors and International Minors, Ten Geographic Areas, 1957-1971	102
13.	Participants in Iranian Oil Exploration and Producing Company, 1971	103

Table | Page

14. Joint Interlocking Ownership Arrangements Among the International Majors in Which the Majors Own Controlling Interest, Ten Geographic Areas, 1957-1971 106

15. Illustrative Joint Ventures Between the International Majors and Local Private Capital, 1957-1971 111

16. Joint Interlocking Ownership Arrangements Among the International Majors and Local Private Capital, Local Governments, and Non-host Governments, Ten Geographic Areas, 1957-1971 115

17. Illustrative Joint Ventures Between the International Minors, 1957-1971 118

18. Joint Interlocking Ownership Arrangements Among the International Minors, Ten Geographic Areas, 1957-1971 122

19. Illustrative Joint Ventures Between the International Minors and Local Private Capital, Local Governments, and Non-host Governments, 1957-1971 127

20. Joint Interlocking Ownership Arrangements Between the International Minors and Local Private Capital, Local Governments, and Non-host Governments, Ten Geographic Areas, 1957-1971 129

21. Illustrative Joint Ventures Between the International Majors and the International Minors, 1957-1971 132

22. Joint Interlocking Ownership Arrangements Between the International Majors and the International Minors, Ten Geographic Areas, 1957-1971 135

23. Joint Interlocking Ownership Arrangements Among the International Majors and Minors, Ten Geographic Areas, 1957-1971 140

24. Joint Interlocking Ownership Arrangements by Participant and Geographic Area, 1957-1971 141

25. Illustrative Consistent Partnerships in Joint Ventures for Selected Participants, 1957-1971 146

26. Ownership Changes in Dansk Underground Consortium and Arabian American Oil Company, by Participant and Company, 1933-1965 149

Table		Page
27.	Joint Petroleum Concessions, Production, Pipelines, and Refining Capacity, Ten Geographic Areas, 1971	158
28.	Number of Joint Interlocking Ownership Arrangements in Exploration and Drilling, Producing Operations, Pipeline Systems, and Refining Operations, Ten Geographic Areas, 1957-1971	159
29.	Amount of Joint Petroleum Concessions, Production, Pipelines, and Refining Capacity Controlled by the International Majors, Ten Geographic Areas, 1971	163
30.	Amount of One-owner Petroleum Production, Pipelines, and Refining Capacity, Controlled by the International Majors, Ten Geographic Areas, 1971	164
31.	Number of Joint Interlocking Ownership Arrangements in Exploration and Drilling, Producing Operations, Pipeline Systems, and Refining Operations, International Majors, Ten Geographic Areas, 1957-1971	166
32.	Amount of One-owner Petroleum Production, Pipelines, and Refining Capacity Controlled by the International Minors, Ten Geographic Areas, 1971	170
33.	Amount of Joint Venture Petroleum Concessions, Production, Pipelines, and Refining Capacity Controlled by the International Minors, Ten Geographic Areas, 1971	171
34.	Number of Joint Interlocking Ownership Arrangements in Exploration and Drilling, Producing Operations, Pipeline Systems, and Refining Operations, International Minors, Ten Geographic Areas, 1957-1971	173
35.	Number of Joint Interlocking Ownership Arrangements in Exploration and Drilling, Producing Operations, Pipeline Systems, and Refining Operations, International Majors and Minors, Ten Geographic Areas, 1957-1971	175
A1.	Legal Titles, Acronyms, Home Country, and Sales of Selected Companies Examined in the Study	
A2.	Joint Ventures in Exploration and Drilling by Kind of Activity, Africa, 1957-1971	
A3.	Joint Ventures in Exploration and Drilling by Kind of Activity, Alaska, 1957-1971	

Table Page

A4. Joint Ventures in Exploration and Drilling by Kind of Activity, Asia-Pacific, 1957-1971 .....

A5. Joint Ventures in Exploration and Drilling by Kind of Activity, Australasia, 1957-1971 .....

A6. Joint Ventures in Exploration and Drilling by Kind of Activity, Canada, 1957-1971 .....

A7. Joint Ventures in Exploration and Drilling by Kind of Activity, Central America, 1957-1971 .....

A8. Joint Ventures in Exploration and Drilling by Kind of Activity, Middle East, 1957-1971 .....

A9. Joint Ventures in Exploration and Drilling by Kind of Activity, North Sea, 1957-1971 .....

A10. Joint Ventures in Exploration and Drilling by Kind of Activity, South America, 1957-1971 .....

A11. Joint Ventures in Exploration and Drilling by Kind of Activity, Western Europe, 1957-1971 .....

A12. Ownership, Capacity, and Location of Crude Oil Refineries, Africa, 1971 .....

A13. Ownership, Capacity, and Location of Crude Oil Refineries, Alaska, 1971 .....

A14. Ownership, Capacity, and Location of Crude Oil Refineries, Asia-Pacific, 1971 .....

A15. Ownership, Capacity, and Location of Crude Oil Refineries, Australasia, 1971 .....

A16. Ownership, Capacity, and Location of Crude Oil Refineries, Canada, 1971 .....

A17. Ownership, Capacity, and Location of Crude Oil Refineries, Central America, 1971 .....

A18. Ownership, Capacity, and Location of Crude Oil Refineries, Middle East, 1971 .....

A19. Ownership, Capacity, and Location of Crude Oil Refineries, South America, 1971 .....

A20. Ownership, Capacity, and Location of Crude Oil Refineries, Europe, 1971 .....

LIST OF FIGURES

Figure		Page
1.	Petroleum Concessions, North Sea, 1969	48
2.	Petroleum Concessions, Libya, 1966	50
3.	Illustrative Example of Possible Indirect Interlocking Connections Resulting from Four Direct Interlocking Connections	108
4.	Joint Venture Producing and Refining Arrangements of Mene Grande Oil Company of Venezuela	167

JOINT VENTURES IN THE INTERNATIONAL PETROLEUM INDUSTRY: EXPLORATION AND DRILLING

CHAPTER I

INTRODUCTION

This is an empirical examination of joint ventures in the international oil industry. Emphasis is on the exploration and drilling phase. The magnitude, participation, control, and participant patterns of joint ventures are studied. A comparison of this data with similar data on producing operations, pipelines, and refineries concludes the study. A detailed examination of producing operations and pipelines was done separately by John R. Munkirs.

A joint venture is defined as a legal arrangement through which two or more economic or political entities combine to engage in some aspect of oil production. This definition allows several types of joint ventures. Two types are singled out for purposes of this study.

One type of joint venture is a joint subsidiary. A joint subsidiary may be owned in equal or unequal shares by two or more participants. An example of this type of joint venture is P. T. Stanvac, Indonesia. It is owned in equal shares through subsidiaries of two international oil companies, Standard Oil Company (New Jersey) (Exxon)

and Mobil Oil Corporation. This type of venture is prevalent among most of the participants in the petroleum industry.

The second type of joint venture is a contractual agreement.[1] This type usually involves either production sharing or cost and profit sharing.

Under a production sharing agreement, one partner assumes the cost and operation of all activities, while the other partner (or partners) receives a share of realized production. An agreement between a subsidiary of Standard Oil Company (Indiana) and Egyptian General Petroleum Company, an Egyptian government company, is an example of this type of joint venture. Standard of Indiana assumes the costs of exploration and production and Egyptian General shares the production. This type is more prominent when a government or a government company is part of a joint venture. The government usually receives a negotiated share of production.

An example of a cost and profit sharing agreement is Phillips Petroleum Company and Ente Nazionale Idrocarburi (ENI), an Italian government company. Under this agreement the partners share equally in both costs and profits. However, there are agreements of this type in which the partners share costs and profits unequally. For example, Total Indonesie, a subsidiary of Compagnie Francaise des Petroles (CFP), a French company, and Pertamina, the Indonesian government company, have a joint concession in Sumatra. In this agreement Total holds a 35 percent

---

[1]This is not to imply that a contract is not involved in a joint subsidiary. The difference lies in the type of contract and the relative permanency implicit in the two types of contracts.

interest and Pertamina has a 65 percent interest. The two participants share costs and profits in these amounts. A cost and profit sharing agreement is most common when one of the participants in the joint venture is an international minor.[2]

There are several reasons for participation in joint ventures. The reasons vary between the participants. The reasons usually given by the company participants are: (a) to spread the financial and political risks involved in oil production; (b) to bring and maintain order or stability in the oil market; (c) to sustain harmony with local business practices and customs; and (d) to spread the cost of exploring and drilling for oil.[3] The first three reasons are usually given by the international majors. The fourth is the one the international minors and small companies usually give.

The reasons usually given by governmental participants are: (a) to gain some degree of control over native resources and (b) to secure a stable supply of oil from producing areas.[4] The first reason is usually given by the less-industrialized oil exporting countries. The second reason is usually given by the industrialized oil importing countries.[5]

---

[2]A detailed description and analysis of the financial and structural types of joint ventures in the international oil industry can be found in the unpublished Ph.D. thesis by John R. Munkirs, "Joint Ventures in the International Petroleum Industry: Production and Pipelines", done at the University of Oklahoma, 1973.

[3]See Munkirs, op. cit., pp. 95-96.

[4]Ibid., p. 96.

[5]A detailed description and analysis of the reasons for joint ventures can be found in Chapter III of the work of John R. Munkirs.

Framework and Scope

The framework of this study is a description of the magnitude, participation, control, and patterns of joint ventures in the oil industry. This is done by distinguishing six groups of participants and examining their role in each of the above categories.

The first group of participants is the international majors. This group consists of Standard Oil Company (New Jersey)(Exxon), the Royal Dutch/Shell Group, Texaco Incorporated, Mobil Oil Corporation, Gulf Oil Corporation, Standard Oil Company of California, and the British Petroleum Company Limited.

Four criteria are used to distinguish this group. The first is participation. These seven companies engage in each aspect of oil production in each of the ten geographic areas included in this study (described on pp. 7-8). The second is relative size. These companies have collective assets of approximately $80 billion.[6] This is an average of about $11 billion per company. The third criterion is control. These companies control approximately 80 percent of the oil reserves outside of the Communist bloc countries.[7] The fourth criterion is convention. Some of the literature surveyed differentiates this group, for example, Harvey O'Connor's book, The Empire of Oil.[8]

---

[6]Calculated from data in Fortune, "The Fortune Directory of the 200 Largest Industrials Outside the United States," (August, 1971), p. 150, and Fortune, "The Fortune Directory of the 500 Largest Industrial Corporations," (May, 1971), p. 172.

[7]See Munkirs, op.cit.,p. 104.

[8]Harvey O'Connor, The Empire of Oil (New York: Monthly Review Press, 1955), p. 19.

The second group of participants is the international minors. The group consists of Standard Oil Company (Indiana), Atlantic Richfield Company, Tenneco Incorporated, Phillips Petroleum Company, Continental Oil Company, Sun Oil Company, Occidental Petroleum Corporation, Union Oil Company of California, Cities Service Company, Getty Oil Company, Standard Oil Company (Ohio), Ashland Oil Incorporated, Marathon Oil Company, Amerada-Hess Corporation, The Signal Companies, Compagnie Francaise des Petroles, Badische Anilin und Sodafabrik, and Petrofina, S.A.

Two criteria are used to distinguish this group of eighteen participants. The first is participation. Each of these companies, except Occidental Petroleum Corporation, is integrated and engages in each aspect of oil production in at least five of the geographic areas included in this study. Occidental is included because of its relative size in terms of assets and its growing relative importance in the international oil industry.

The second criterion is relative size. These eighteen companies have collective assets of approximately $48 billion.[9] This is an average of about $2.6 billion per company.

The third group of participants is non-host government companies. These companies are primarily from the oil importing countries, but operate in all or almost all of the geographic areas studied and are usually integrated companies. Examples of these government companies are: ENI,

---

[9]Calculated from data in Fortune, "The Fortune Directory of the 200 Largest Industrials Outside the United States," (August, 1971), pp. 150-151, and Fortune, "The Fortune Directory of the 500 Largest Industrial Corporations," (May, 1971), pp. 172, 174, 176.

Deutsche Erdolversorgungsgesellschaft, MbH., (Deminex)[10] and Japan Petroleum Exploration Company (JAPEX), Italy, Germany, and Japan's government companies, respectively.

The fourth group is local government companies. These companies are mainly from the oil exporting countries and operate almost exclusively in their mother countries. They are usually not integrated companies and usually are involved in production or profit sharing agreements with non-domestic companies. Examples of these government companies are: National Iranian Oil Company, Iran's government company; Yacimientos Petroliferas Fiscales (YFP), Argentina's government company; and Sonatarch, Algeria's government company.

The fifth group is local private capital. The participants in this group are generally small companies which operate in one area and are domiciled in that area. An example of local private capital is the Australian Oil and Gas Company. This company is located in Australia and operates almost exclusively in this area.

The sixth group is called "others." There are two types of participants in this group. One of these types is made up of smaller companies whose main product is petroleum. Not all of these companies are integrated, but they are active internationally. They include, for example, Kerr-McGee Corporation, The superior Oil Company, Gelsenberg A. G., and several European and Japanese companies. The second type is made up of companies which are not characteristically petroleum companies, but

---

[10]Deminex is not a government-owned company. It is owned by ten private German firms, (see the Appendix, Table A-11, Venture Number 15, P. 364). However, its objectives are similar to those of ENI and JAPEX.

which occasionally participate in exploration and drilling ventures. Included in this type are such companies as Dow Chemical Company, Freeport Sulphur, Monsanto Corporation, and Imperial Chemical Industries.

The time period covered in this study includes the years 1957 through 1971. The scope is limited to exploration and drilling joint ventures and an integration of this phase of production with producing operations, pipeline systems, and refining operations. The geographic area covered is the world, with two exceptions. These are the Communist bloc countries[11] and the continental United States, including offshore areas. The Communist bloc countries were omitted because the primary sources did not contain sufficient data to justify an attempt to study this area. The continental United States was omitted because the primary sources often did not include ownership percentages. These percentages were not available to the author from government documents or the Securities and Exchange Commission. One reason is that the Securities and Exchange Commission does not require companies to report the ownership of subsidiaries in which a company owns less than fifty percent.

Data were collected, tabulated, and analyzed for ten geographic areas. These areas include: Africa,[12] Alaska, the Asia-Pacific area,[13]

---

[11]The Communist bloc includes: Albania, Bulgaria, Czechoslovakia, East Germany, Hungary, North Korea, People's Republic of China, Poland, Romania, Union of Soviet Socialist Republics, and Yugoslavia.

[12]The Countries included in Africa are: Algeria, Cameroon, Chad, Dahomey, Egypt, Gabon, Ganbia, Ghana, Ivory Coast, Liberia, Libya, Mauretania, Morocco, Niger, Nigeria, Senegal, Sierra Leone, Spanish Sahara, Togo, and Tunisia.

[13]Asia-Pacific includes: Borneo, Burma, Indonesia, India, Japan, New Guinea, Philippines, South Korea, Taiwan, West Irian, and West Pakistan.

Australasia,[14] Central America,[15] the Middle East,[16] the North Sea,[17] South America,[18] and Western Europe.[19]

There are four activities included in the exploration and drilling phase of oil production. The first is exploration. This activity includes seismic surveys, aerial surveys, geomagnetic surveys, and other geological surveys.

The second activity is buying or leasing concessions. The concessions included in this study are the ones in effect at some time during the period 1957 through 1971. Some of the concessions were granted before 1957, but no systematic search was made for concessions granted before 1957. Most of the concessions were in effect as of December, 1971. Some concessions may have expired before this time, while others may have been released or reduced.

The third activity is drilling. There is more than one type of drilling activity. Exploratory drilling is undertaken to determine the location of possible oil pools. If oil is discovered, the area is tested

---

[14]Australasia includes: Australia, New Zealand, and Papua.

[15]Central America includes: Bahama Islands, British Honduras, Costa Rica, Cuba, Dominican Republic, Guatemala, Honduras, Jamaica, Mexico, Nicaragua, Panama, Tobago, and Trinidad.

[16]The Middle East includes: Abu Dhabi, Aden, Bahrain, Dhofar, Dubai, Iran, Iraq, Israel, Jordan, Kuwait, Muscat, Neutral Zone, Oman, Qatar, Saudi Arabia, Trucial Coast, and Turkey.

[17]The North Sea is divided into: the British, Danish, German, Netherlands, Norwegian, and Scottish North Seas.

[18]The countries included in South America are: Argentina, Bolivia, Colombia, Ecuador, Guyana, Paraguay, Peru, and Venezuela.

[19]Western Europe includes: Austria, Denmark, France, Great Britain, Italy, the Netherlands, Spain, and West Germany.

by drilling other wells to determine if the discovery is commercial. Upon determination of commercial production, more wells are strategically drilled in order to maximize the recovery of oil. The data in this study include only the first two types of drilling. The number of these types of drilling is all that is included in this category when determining the number of drilling operations in the various areas.

The fourth activity is discoveries. The discoveries are those considered by the companies to be commercial. A series of discoveries in an area may lead to a producing field or a producing operation. Only those discoveries reported by the primary sources, The Oil And Gas Journal and World Oil, are included in this study.

Sources

The data for this study are from two primary sources and five secondary sources. The primary sources are The Oil and Gas Journal, 1957-1971, and World Oil, 1957-1971. The Oil and Gas Journal is a weekly publication of the Petroleum Publishing Company. World Oil is a monthly publication of Gulf Publishing Company. It has two special editions: one in February and one in August. These editions contain a survey of the international oil industry's activities.

The Oil and Gas Journal's sources include foreign government agencies and oil companies. World Oil's sources include foreign government agencies, oil companies, and other "trade sources" which are undisclosed.

The secondary sources are: (1) The International Petroleum Register, 1966-1967, (2) directories of oil companies, (3) the International Petroleum Encyclopedia, 1970 and 1971, (4) the Aramco Handbook, Oil and

the Middle East, and (5) personal interviews.

The International Petroleum Register contains a list of oil companies, the phase or phases of oil production they are engaged in, and some of their principal subsidiaries. This source was especially helpful in determining the ownership of French, German, and Italian companies. It was also used to cross-check the data from the primary sources.

Three directories published by the Petroleum Publishing Company were made available to the author. These were: Petroleum Directory, Eastern Hemisphere; Petroleum Directory, Latin America; and USA Oil Industry Directory. The first two list the companies operating in each country for their respective areas. They were useful in obtaining the correct or most recent names of the companies and their operating subsidiaries in various countries. In a few instances these directories supplied ownership percentages for joint subsidiaries. The third directory contains a historical sketch of each integrated United States oil company. It lists the principal subsidiaries of integrated companies. Also, it lists nonintegrated United States Oil companies. This source was consulted for names of subsidiaries and ownership of some joint subsidiaries.

The Aramco Handbook, published by the Arabian American Oil Company, was used as a cross-check on concessions in the Middle East. The source was prepared in 1967. There have been changes in concessions and ownership since that time. At times the data in this source conflicted with the data from the primary sources. In such cases the data from the primary sources were used.

Three sets of personal interviews were helpful in gathering

material for this study. The first set of interviews was in Tulsa, Oklahoma, at the Petroleum Publishing Company. Mr. John C. McCaslin, Exploration Editor, and Mr. Donald W. Wilson, Manager of the Directory Department for The Oil and Gas Journal, were interviewed. Mr. McCaslin provided several area maps which were used to cross-check data on the geographic areas in this study. He also suggested several sources of information which proved to be helpful. Mr. Wilson suggested several sources from which to obtain information about oil companies. He also donated the three company directories mentioned above.

The second set of interviews was in Houston, Texas, at the Gulf Publishing Company. Mr. Gene Kliewer, Special Project Editor for World Oil; Mr. George B. Gibbs, Editorial Director for Hydrocarbon Processing; and Mr. Charles H. Vervalin, Manager of Training and Development Services for Gulf Publishing Company, were interviewed. Mr. Kliewer discussed various sources of information and methods of acquiring information. Mr. Gibbs and Mr. Vervalin discussed several technical aspects of oil processing and management of international oil companies respectively.

The third set of interviews was in Washington, D. C. This trip was made possible by a grant from the Graduate College of the University of Oklahoma. The grant was obtained via a recommendation from the Department of Economics. The agencies visited were the Federal Trade Commission, the Justice Department, the Senate Subcommittee on Antitrust and Monopoly, and the Interstate Commerce Commission.

At the Federal Trade Commission, Mr. Frank Lipson, a staff lawyer with the Bureau of Competition, was interviewed. At the Justice

Department, Mr. John Lamont, a staff lawyer for the Antitrust Division was interviewed. Dr. David Martin and Dr. Walter Measday, staff economists for the Senate Subcommittee on Antitrust and Monopoly, were interviewed. Upon referral by the Interstate Commerce Commission Mr. James E. Hickey, Jr., a lawyer with the law office of Northcutt Ely, was interviewed. In addition to these agencies, Mr. Jerry S. Cohen and Mr. Arthur S. Miller, lawyers working in the areas of industrial organization and antitrust policy, were interviewed.

Each of the Agencies and the two lawyers provided insights into the organization and operation of the oil industry. They also made available several government studies.

Procedure

Each issue of The Oil and Gas Journal and World Oil, between 1957 and 1971, was examined for announcements of joint ventures. Many announcements contained ownership percentages, operating subsidiaries, if any, and the nature of the activity. When the announcements did not contain this information or a discrepancy between the sources occurred, the secondary sources were used. However, there were instances in which it was not possible to obtain ownership percentages for some joint ventures.

The announcements were first sorted by year. Parent company and subsidiary names were cross-checked against the directories and the International Petroleum Register. With the joint ventures arranged in this form, eleven distinct geographic areas emerged. Due to the relative amount of data for the West Indies and Central America, it was decided, for the purposes of this study, to merge these two areas into one.

The data were sorted by area and year and then arranged and tabulated by similarity of the joint ventures. Patterns and anomalies between and among the areas and the participants could then be discerned.

The following is an outline of the study. Chapter II presents a survey of the literature. In Chapter III there is a discussion of the magnitude, participation, and control of joint ventures in ten geographic areas. Chapter IV contains an analysis of participation patterns among the majors, the minors, and others. Chapter V contains a discussion of joint ventures as a means to bring order and organization into the international petroleum industry. Chapter VI presents a summary and the conclusions of the study.

CHAPTER II

SURVEY OF THE LITERATURE

Two types of literature are included in this survey. Industrial organization is the subject of the first type. The oil industry is the subject of the second. There is a vast amount of literature on each topic. This survey provides selected samples of this literature. The selections are thought to be representative of the types of research which have been undertaken in the two areas.

The industrial organization literature is in two parts. First, is literature dealing with joint ventures in non-petroleum industries. Second, literature in the area of international industrial and business organization is surveyed.

The literature on the oil industry is also in two parts. First, is literature which deals with joint ventures in the industry. Second, is a discussion of different writers' views of the industry's organization.

Industrial Organization Literature

The industrial organization literature that deals with joint ventures discerns some general characteristics and definitions of this concept. However, it seems to offer no clear-cut concept of joint ventures.

Some literature has a fragmentary discussion of joint ventures. Often this discussion is confined to a chapter or a section of a chapter. A typical example of this literature is a book by Michael Z. Brooke and H. Lee Remmers. In this book two sections are devoted to joint ventures. These sections examine the advantages and disadvantages of joint ventures. The advantages are from three standpoints: (1) managerial and technological, (2) financial, and (3) political. The disadvantages are: (1) conflicts of interest with local partners, (2) a reluctance to disclose information to outsiders, and (3) an unwillingness to share earnings of the investment.[1] The advantages and disadvantages are individually discussed, but no conclusion is reached as to what is more important in each category. No conclusion is reached as to whether the advantages outweigh the disadvantages, or vice versa.

Some books are devoted entirely to a particular facet of joint ventures. One example is a book by Lawrence G. Franco. Franco studied 159 corporations based in the United States. Each corporation had manufacturing operations in at least six countries in 1964. One hundred seventy firms qualified under this criteria; however, two were eliminated by merger and one for lack of historical data on subsidiaries. The other eight which were eliminated were petroleum firms. The reasons for omitting these firms are stated as:

> The eight petroleum firms in the original 170-company sample were excluded from consideration at the outset of this study on the grounds that their operations were of

---

[1]Michael Z. Brooke and H. Lee Remmers, The Strategy of Multinational Enterprise, Organization and Finance (New York: American Elsevier Publishing Company, Inc., 1970), pp. 269-272.

> sufficient complexity and singularity to warrant a separate examination, . . .[2]

The joint ventures were between American firms and a foreign entity. The foreign entities were either companies, governments, or individuals.[3]

Franco's study deals mainly with the conditions under which joint ventures are likely to survive. Two primary conditions for survival are given. One is the original choice of the partner for the venture. The other is the main reason for entering the joint venture at the outset.[4]

Two books on joint ventures were done as group research projects by the Legal Research Program at Columbia University. The first book was published in 1961. This study attempts to give ". . . a comparative analysis of the existence, types, and operations of joint international business ventures."[5] The authors express the conviction that joint ventures will become increasingly more important as a form of business association between the Western world and the economically backward states.[6]

The authors argue that joint ventures have become more common in recent years as a way of conducting international business. As they state in their opening chapter, this device is conceived as a method to reduce conflicts:

> . . . the central question is . . . whether the joint inter-

---

[2]Lawrence G. Franco, Joint Venture Survival in Multinational Corporations (New York: Praeger Publishers, 1970), p. 23.

[3]Ibid., p. 1.

[4]Ibid., pp. 195-196.

[5]Wolfgang G. Friedmann and George Kalmanoff (eds.), Joint International Business Ventures (New York: Columbia University Press, 1961), p. 11.

[6]Ibid., p. 4.

> sufficient complexity and singularity to warrant a separate examination, . . .[2]

The joint ventures were between American firms and a foreign entity. The foreign entities were either companies, governments, or individuals.[3]

Franco's study deals mainly with the conditions under which joint ventures are likely to survive. Two primary conditions for survival are given. One is the original choice of the partner for the venture. The other is the main reason for entering the joint venture at the outset.[4]

Two books on joint ventures were done as group research projects by the Legal Research Program at Columbia University. The first book was published in 1961. This study attempts to give ". . . a comparative analysis of the existence, types, and operations of joint international business ventures."[5] The authors express the conviction that joint ventures will become increasingly more important as a form of business association between the Western world and the economically backward states.[6]

The authors argue that joint ventures have become more common in recent years as a way of conducting international business. As they state in their opening chapter, this device is conceived as a method to reduce conflicts:

> . . . the central question is . . . whether the joint inter-

---

[2]Lawrence G. Franco, Joint Venture Survival in Multinational Corporations (New York: Praeger Publishers, 1970), p. 23.

[3]Ibid., p. 1.

[4]Ibid., pp. 195-196.

[5]Wolfgang G. Friedmann and George Kalmanoff (eds.), Joint International Business Ventures (New York: Columbia University Press, 1961), p. 11.

[6]Ibid., p. 4.

> national business venture shows promise of lessening the conflicts and producing a greater degree of cooperation than can be anticipated from available or conceivable alternatives.[7]

The second book was published in 1971. This study is a follow-up to the earlier study. The authors contend that in the ten years between the two publications ". . . the joint international business venture has become the predominant form of foreign investment in developing countries."[8]

The book is mainly a case study approach to joint ventures. The cases represent a wide variety of joint venture types. These include bipartite and multipartite ventures among private partners as well as government entities.[9]

Each chapter is a case study of an industry in a particular country. A number of countries are surveyed in the cases. Primarily the ventures are between economic entities of developed countries and governments of underdeveloped countries.[10]

An article published in the Harvard Business Review in 1959 examined some aspects of joint ventures. This article emphasizes the joint subsidiary. Malcolm West, the author, observes that joint subsidiaries are most common in the petroleum and steel industries. However, he states

---

[7] Ibid., p. 6.

[8] Wolfgang G. Friedmann and Jean-Pierre Béguin (eds.), Joint International Business Ventures in Developing Countries (New York: Columbia University Press, 1971), p. vi.

[9] Ibid., pp. vi-vii.

[10] For example, in Chapter 3 of Part II, a joint venture in Liberian iron ore mining is discussed. This venture is between a Liberian government company and a multinational corporation.

there is an increase in joint subsidiaries in other industries.

> In an increasingly broad range of industries, companies have been forming joint subsidiaries. Under continual pressure for greater diversification and for more new products, but hampered by the limitations of their own know-how, by heavy investment requirements, and also by antitrust legislation, more and more businesses have found in joint subsidiaries one answer to their dilemma.[11]

West asserts that joint subsidiaries are gaining "a permanent place on the business scene."[12]

Antitrust aspects of joint ventures are the subject of several articles. These articles are mainly in law journals and The Antitrust Bulletin.

An article by Paul R. Dixon, the former chairman of the Federal Trade Commission, examines the implications of joint ventures for competition. Dixon states that the joint venture is both an old and a new device in business organization. It is the new and more sophisticated type of joint venture which interests the Federal Trade Commission. This type of joint venture:

> . . . is the offspring of two or more giant corporations, each with vast financial resources, which--for one reason or another--want to conduct jointly through it an enterprise in a field in which they have a common interest.[13]

The main question with which Dixon is concerned is the probable effect of joint ventures on competition. After noting that the Commission is not concerned with mergers or joint ventures between or among companies

---

[11]Malcolm W. West, Jr., "Thinking Ahead: The Jointly Owned Subsidiary," Harvard Business Review, Vol. 37, (July-August, 1959), p. 31.

[12]Ibid., p. 172.

[13]Paul Rand Dixon, "Joint Ventures: What Is Their Impact on Competition?" The Antitrust Bulletin, VII (May-June, 1962), p. 398.

with small market shares, he states:

> . . . if two firms, each with a sizeable share of the market for a commodity, pool this business into a joint venture, the effect--for all practical purposes--is similar to that of a merger. It is really the old "trust" technique in modern dress. The damage to competition is clearcut, and, if possible, the move should be quickly halted. The particular device used to achieve the result is irrelevant. It is the effect upon competition that counts.[14]

Dixon argues that the antitrust laws are applicable to foreign joint ventures involving American firms. It cannot be assumed, he states:

> . . . that corporations may stand as one in foreign countries or markets, but that within the territorial confines of the United States they are vigorous rivals in the competitive struggle.[15]

Dixon concludes that when potential competitors become participants in joint ventures, potential competition is diluted or lost. This problem, he claims, must be dealt with if the Federal Trade Commission is to function as it should.[16]

Michael Bergman has also examined the relationship between joint ventures and the antitrust laws. He says that joint ventures have recently been modified in form and are becoming a significant form of business association. He further states that the effects of joint ventures on competition must be ascertained before the legalities of these arrangements can be determined. In his words:

> Throughout the entire history of antitrust development, the law has been concerned with substance rather than with form. Courts have traditionally shown a disregard for "the mere form in which the assailed trans-

---

[14] Ibid., p. 407.

[15] Ibid., p. 410.

[16] Ibid., pp. 409-410.

> actions are clothed." Accordingly, to describe a combination as a "joint venture" denotes neither illegality per se nor absolute immunity under the antitrust laws.[17]

Bergman concludes that the proper use of joint subsidiaries can contribute to emerging technological fields. They can also facilitate competition in established industries. However, the author claims that:

> . . . the competitive sword of the joint venture is double-edged. Just as it vitalizes it can depress; just as it opens it can congest. If the restrictive effects are to be prevented, and yet the constructive aspects encouraged, then the permissible bounds of corporate collaboration must be clearly defined.[18]

The remaining literature in this section examines the general subject of industrial and business organization. Two views are examined. The first is the world-organization aspect of corporations. The second is the role of technology as a force in the organization of international industry and business.

In the last five to ten years there has been a marked increase in the literature on multinational corporations. It seems reasonable that these books and their relative increase point to the idea that the structure of international business organization is changing.

One thesis is that the multinational corporation will become a new form of world organization. The proponents of this view think that the corporation may supersede the national state as a structure for organizing the peoples of the world.

This view was put forth as early as 1932 by Adolf A. Berle and

---

[17]Michael Bergman, "The Corporate Joint Venture Under the Antitrust Laws," New York University Law Review, Vol. 37, (June, 1962), p. 714.

[18]Ibid., p. 734.

Gardner C. Means. One theme of their book was that the corporation provided a vehicle to aggregate economic power under one set of leaders, the management of the corporation. Further, they argued that this form of economic and political organization was in operation not only in the United States, but throughout the world. They concisely state their argument this way:

> The rise of the modern corporation has brought concentration of economic power which can compete on equal terms with the modern state--economic power versus political power, each strong in its own field. The state seeks in some aspects to regulate the corporation, while the corporation, steadily becoming more powerful, makes every effort to avoid such regulation. Where its own interests are concerned, it even attempts to dominate the state. The future may see the economic organism, now typified by the corporation, not only on an equal plane with the state, but possibly even superseding it as the dominant form of social organization. The law of corporations, accordingly, might well be considered as a potential constitutional law for the new economic state, while business practice is increasingly assuming the aspect of economic statesmanship.[19]

The revised edition of this book was published in 1968. Their view has apparently remained basically unchanged.

In 1967 a United States State Department spokesman, George W. Ball, at the time Undersecretary of State, seemed to agree with Berle and Means. Testifying before the U.S. Congress Subcommittee on Foreign Economic Policy of the Joint Economic Committee, Ball stated:

> . . . modern business--sustained and reinforced by modern technology--has outgorwn the constrictive limits of the antiquated political structures in which most of the world is organized . . . the explosion of business beyond national borders will tend to create needs and pressures that can alter political structures to fit the requirements of modern man far more adequately than the present crazy-quilt of small national states. And meanwhile,

---

[19]Adolf A. Berle and Gardner C. Means, The Modern Corporation and Private Property (New York: Commerce Clearing House Inc., 1932), p. 357.

> commercial, monetary, and antitrust policies--and even the domiciliary supervision of earth-straddling corporations--will have to be increasingly entrusted to supernational institutions.[20]

In 1971 Peter G. Peterson prepared a report entitled, The United States in the Changing World Economy. This was done at the request of President Richard Nixon. In a section devoted to multinational corporations, Peterson states a view similar to that of Berle and Means and George Ball. He says:

> . . . we must recognize the rapidly gorwing importance of that large vehicle of wealth and capital transfers, the multinational corporation. Much is said and little is publicly known about the interlocking effects of these corporations on U.S. jobs, trade and the balance of payments, and the effects on the economics of other countries . . . .
> . . . . . .
> Multinational corporations represent to some the wave of the future in that they already take a "one world" approach to business.[21]

The role of technology in shaping the interrelationships and structure of societies has received considerable attention. This idea, that technology is the major determining factor in organizing man's economic and social endeavors, has a long history.

Karl Marx was one of the early adherents to technological determinism. One statement of his view is found in Capital, Volume 1. He states:

> Technology discloses man's mode of dealing with nature, the

---

[20]U.S. Congress, The Future of the U.S. Foreign Trade Policy, Hearings before the Joint Economic Committee, 90th Congress, 1st Session, July 11-12, 18-20, 1967, Vol. F, p. 273.

[21]Peter G. Peterson, The United States in the Changing World Economy, Report to the President and the Commission on Foreign Trade Policy, Vol. I, (Washington, D. C.: U.S. Government Printing Office, 1971), p. 29.

> process of production by which he sustains his life, and thereby also lays bare the mode of formation of his social relations, and of the mental conceptions that flow from them.[22]

Another proponent of this view was Thorstein Veblen. Veblen argued that technology, or as he called it, the machine process, continually changes the rules and structure of society. Examining what he called the institution of business enterprise as a specific case of these changes, Veblen states that:

> The growth of business enterprise rests on the machine technology as its material foundation. The machine industry is indispensable to it; it cannot get along without the machine process. But the discipline of the machine process cuts away the spiritual, institutional foundations of business enterprise; the machine industry is incompatible with its continued growth; it cannot, in the long run, get along with the machine process. In their struggle against the cultural effects of the machine process, therefore, business principles cannot win in the long run; since an effectual mutilation or inhibition of the machine system would gradually push business enterprise to the wall; whereas with a free growth of the machine system business principles would presently fall into abeyance.[23]

Contemporary economists have also embraced the technological determinism thesis. Clarence Ayres, who built on the work of Veblen, places technology in a dichotomy along with ceremony to construct a framework to examine societies, including their economies. Although technology and ceremony make up the dichotomy, Ayres leaves no doubt as to which is the major determining factor. As he says:

---

[22]Karl Marx, Capital, A Critique of Political Economy ed. by Frederick Engels, trans. from 3rd German ed. by Samuel Moore and Edward Aveling (New York: Modern Library, 1936), p. 406n.

[23]Thorstein B. Veblen, The Theory of Business Enterprise (New York: Charles Scribner's Sons, 1904), p. 177.

> It is the technological continuum which is, and has always been, the locus of value; and it has this meaning because of its continuity. This continuum is identical with what John Dewey has called "the continuum of inquiry," and its significance as the locus of value--including economic value--may be understood in terms of the logical significance of the instrumental continuum.[24]

Another contemporary spokesman for this view, John Kenneth Galbraith, uses the idea to directly examine business and economic relationships. He states:

> . . . we have an economic system which, whatever its formal ideological billing, is in substantial part a planned economy. . . . The imperatives of technology and organization, not the images of ideology, are what determine the shape of economic society.[25]

The technologist's concern is with two things. One is the use of the most advanced technology in order to achieve the most efficient operation of industry. This, according to the technologists, requires planning and often cooperation among the industries and within an industry. The second is that the use of technology will change the ideological structure of the economy. That is to say that under the force of technology a new "way of doing business" seems to be taking shape.

Both the technologist's and the world organization view leads to the idea that cooperation exists among and between the members of industries. The larger companies have extraordinarily diversified operations in almost all parts of the world. These operations are often complicated and require considerable planning. Often a team effort is

---

[24]Clarence E. Ayres, The Theory of Economic Progress (2nd ed.; New York: Schocken Books, 1944), p. 220.

[25]John Kenneth Galbraith, The New Industrial State (New York: Houghton Mifflin Company, 1967), pp. 6-7.

needed to coordinate the operations of a company. The smooth operation of the industry also requires coordination among the various entities. Coordination may take many forms; one form is joint ventures.

Petroleum Industry Literature

The literature discussed in this section deals specifically with the petroleum industry. Part one of the section contains a survey of joint venture literature. Part two contains a survey of the literature and ideas pertaining to the organizational structure of the industry.

Two books previously discussed in this chapter also examine petroleum industry joint ventures. In the book by Friedmann and Kalmanoff (see n. 5, supra), several petroleum joint ventures are mentioned.[26] However, these joint ventures are not systematically organized by the authors. Except in noting their existence, there is little discussion of the ventures.

One chapter in the book by Friedmann and Béguin (see n. 8, supra) is devoted to oil production in Iran. This chapter is basically a description of two joint ventures.

One joint venture is between AGIP Mineraria, SPA., a subsidiary of Ente Nazionale Idrocarburi (ENI), Italy's government company, and the

---

[26] In the Phillipines three joint ventures are mentioned. They are Caltex (Texaco and Standard of California), Standard Vacuum (Mobil and Standard of New Jersey) and a venture between Gulf Oil Corporation and private Philippine interests. Another venture mentioned is between International Petroleum Company, a subsidiary of Standard of New Jersey, and the Colombian government. International has been involved in several joint ventures with the Colombian government. One venture they share is the DeMares Concession, the largest in Colombia. See Friedmann and Kalmanoff, op. cit., pp. 59, 63.

National Iranian Oil Company (NIOC), Iran's government company. This venture is a result of Iran's Petroleum Act of 1957. Societè Irano-Italienne des Petroles (Sirip), a joint Italian-Iranian company, was formed by AGIP and NIOC. Sirip's capital is held in equal shares by the two companies. Therefore, Sirip is an equity joint venture.[27]

Included in the discussion of this joint venture is an analysis of its management, profit splits, and cost sharing. The venture is managed by a six-member board of directors. Half of the members of the board are appointed by NIOC, and the others are appointed by AGIP. Four members must agree before decisions of the board are valid.[28] In the event of disputes a conciliation committee is appointed. If this committee is unable to provide a mutually acceptable solution, an arbitration panel is set up. This panel is comprised of three referees. One referee is appointed by each of the two companies. The third member, who acts as chairman, is appointed by these two referees. If they are unable to agree on this appointment, the chairman is appointed by the Chief Justice of the Geneva Cantonal Tribunal. The decision of this committee is binding on both parties.[29]

The operating costs of Sirip are shared equally by NIOC and AGIP. Net profits are divided twice. First, they are divided 50-50 between Sirip and the Iranian government. Sirip's 50 percent is then divided 50-50 between NIOC and AGIP. Since NIOC is owned by the Iranian govern-

---

[27] Friedmann and Béguin, op. cit., p. 35.

[28] Ibid., p. 35.

[29] Ibid., p. 37.

ment, the effective profit split is 75-25 in favor of Iran.[30]

The venture evoked criticisms from many international oil companies. They argued that the agreement broke the traditional 50-50 profit sharing principle and endangered the traditional relations between oil countries and oil companies.[31]

The second venture is between NIOC, AGIP, Phillips Petroleum, and the Oil and Natural Gas Commission of India (ONGC). The venture began in 1965 and is also a result of the Petroleum Act of 1957. In this venture NIOC holds a 50 percent interest and AGIP, Phillips, and ONGC hold a 50 percent interest, divided equally among them. Since the venture is a contractual agreement, AGIP, Phillips, and ONGC cannot transfer their interests without the approval of NIOC.[32]

The discussion of this venture also includes an analysis of profit splits, cost sharing, and management. The management of the venture is conducted by Iranian Marine International Oil Company (Iminoco). Iminoco is strictly a management company. It has no balance sheet and is not subject to taxation. Half of the board members of Iminoco are nominated by NIOC. AGIP, Phillips, and ONGC nominate the other half. Disputes are settled in approximately the same manner as with Sirip.[33]

These two ventures represent two different types of joint venture agreements. The formula for the first venture was accepted in

---

[30] Ibid., p. 36.

[31] Ibid., p. 37.

[32] Ibid., p. 41.

[33] Ibid., pp. 45, 50.

other agreements signed by NIOC and other foreign oil companies. The second agreement was also the basis for subsequent agreements between NIOC and other foreign companies.[34] Both of these agreements represent stages in the evolution of Iran's oil policy. The long-range goal of this policy is to gain control over its domestic oil resources.[35]

Numerous studies have been made on the Middle East oil industry. Virtually all of these examine the joint venture structure in the area. Usually this examination is confined to one or two chapters of the study.

One example of this type of work is by Sam H. Schurr, Paul T. Homan, and Associates. Two chapters of this book contain data on joint ventures. One chapter discusses the major oil concessions in the Middle East. The concessions granted in each country are reviewed. This review includes the size and duration of the concessions. It also examines their ownership. With the exception of Libya, the original concessions are granted to the international majors and Compagnie Francaise des Petroles (CFP).[36] Prior to 1950 these eight companies were the sole operators in the Middle East. Without exception, the concessions and producing operations were joint ventures.

The other chapter discusses the various changes initiated by the governments of the producing countries since 1950. These changes have modified the concessions and the institutional environment. The

---

[34] Ibid., pp. 37-38, 52.

[35] Ibid., pp. 52-53.

[36] Sam H. Schurr, and Paul T. Homan, and Associates, Middle Eastern Oil and the Western World; Prospects and Problems (New York: American Elsevier Publishing Company, Inc., 1971), p. 111.

impetus for changes was to promote the countries' national interests.

These changes involve four principal areas. First, profit sharing via direct taxation was initiated to replace royalties. Second, after 1960 posted prices were frozen and profit calculations for tax purposes were made on the basis of posted prices. Third, the type of participation by the countries was changed. This involved equity ownership on the part of national companies. Fourth, portions of original concessions were relinquished.[37]

Beginning in 1957 a number of new concession agreements, significantly different from the older ones, were granted by the countries. The terms of the agreements differ from country to country. Generally they have followed the pattern of joint enterprises involving a foreign company and a national oil company.[38] The concessions include new territory, both on and offshore, and parts of the relinquished territory. The authors conclude that the changing relationships will continue to evolve. The nature of these changes may be more fundamental than those in the past.[39]

There are several studies which examine the oil industry in a particular geographic region or country. Occasionally, these studies contain a brief discussion of joint ventures, while the remainder of the study deals with other topics. One example of this type of work is by Scott Pearson.

---

[37] Ibid., p. 120.

[38] For examples of these arrangements see pp.25-27 in this chapter.

[39] Schurr, Homan, and Associates, op. cit., p. 1.

In two chapters Pearson discusses the oil concessions granted by the Nigerian government. His discussion concentrates on the size and ownership of these concessions. Pearson details the ownership, size, and location of the concessions. Part of the concessions are jointly owned. He does not discuss the joint ventures, but he lists them in a table. Since 1958 several oil companies have acquired concessions in Nigeria. These companies hold some concessions as joint ventures, either with other companies or the Nigerian government.[40]

Joint ventures received attention in a collection of papers presented to the Institute on Economics of the Petroleum Industry by consultants and industry representatives. Allen Cree, the manager of International Exploration Division for Cities Service Company, presented one of these papers. In discussing the acquisition of concessions he mentions joint ventures. He states:

> Ordinarily you must deal with a foreign government, but if you are strongly attracted to a concession held by an individual or another oil firm, you can negotiate for an interest in it, just as you do here.[41]

Another representative of the industry, Howard W. Blauvelt, Vice President of Continental Oil Company, presented a paper on, "How to Become a Foreign Oil Company." One of the methods of becoming a foreign oil company is via joint ventures. As Blauvelt says:

> Another major policy decision was to emphasize acquisitions and joint ventures, rather than "grass roots" Continental

---

[40]Scott R. Pearson, Petroleum and the Nigerian Economy (Stanford, California: Stanford University Press, 1970), pp. 15-18.

[41]Allen Cree, "Problems of Exploration Abroad" in Exploration and Economics of the Petroleum Industry, New Ideas, New Methods, New Developments, Vol. IV, ed. Virginia S. Cameron (Houston: Gulf Publishing Company, 1966), p. 107.

operations, whenever possible.[42]

Blauvelt states several reasons for these methods. One reason is that joint ventures and acquisitions ". . . impart a degree of local character and identification to our operations. . . ."[43]

An article containing information on petroleum industry joint ventures was written by Walter Mead. In a section devoted to joint ventures, he states that:

> Domestically, joint ventures among horizontally related oil companies are common for pipeline facilities and for crude oil and gas exploration and production in submerged areas and in the state of Alaska.[44]

Mead generated his data by surveying trade journals and periodicals between 1954 and 1967. His data include ventures in refining, pipelines and other transportation facilities, and jointly held oil and gas properties and leases in the United States.[45] His findings indicate that a large number of joint ventures have been created among the thirty-two oil companies on Fortune's list of the 500 top industrial corporations.

> For example, Standard Oil Company of New Jersey has 299 joint ventures with 27 of the 31 possible competing firms. Mobil Oil Company, which is the second largest U.S. Oil Company, has 300 joint ventures with 28 out of the 31 possible competitors. The Royal Dutch Shell group has 340 joint ventures with 29 out of 31 American possibilities.[46]

---

[42]Howard W. Blauvelt, "How to Become a Foreign Oil Company" in Exploration and Economics of the Petroleum Industry, New Ideas, New Methods, New Developments, Vol. IV., ed. Virginia S. Cameron (Houston: Gulf Publishing Company, 1966), p. 286.

[43]Ibid.

[44]Walter J. Mead, "The Structure of the Buyer Market for Oil Shale Resources," Natural Resources Journal, Vol. 8 (October, 1968), p. 618.

[45]Ibid.

[46]Ibid.

In addition to these joint ventures, oil companies commonly bid jointly for oil and gas leases offered by federal and state governments. Mead examined the bidding record in Alaska and the Gulf of Mexico. The bidding pattern established that:

> . . . (1) simultaneous joint bidding and competitive bidding between two or more partner firms is a rare occurrence, and (2) in the two-year period following the dissolution of a joint bidding agreement, the former partners do not bid against each other with the frequency which random behavior would require.[47]

According to Mead, the joint bidding record and the joint venture record establish that there are many partnership arrangements. Most of these are among the largest competing firms in the industry. He states that, "These findings raise substantial doubts about the independence of the large American oil companies."[48]

Mead concludes that the future buyer market for oil shale leases will probably be limited to a few large firms, plus some joint ventures among smaller companies. Competition will be further limited by the multitude of partnerships arising out of joint ventures.[49]

The next type of literature examines the general structure of the petroleum industry. Two views are presented. The first view of this structure is that of industry representatives and standard economic theory. The second view is the Antitrust View. This literature is mainly concerned with the illegal, or possible illegal activities of the oil industry.

---

[47] Ibid., pp. 620-621.

[48] Ibid., p. 620.

[49] Ibid., p. 622.

The View of the Industry

According to some representatives of the petroleum industry, there is diversity and competition among the members of the industry. Their literature seems to have a common theme which as one representative put it:

> There is no such thing as "the oil industry," it's just a bunch of outfits competing with each other and each one has its own policies.[50]

This idea partly dovetails with the economic model of pure competition. The literature of standard theoretical analysis of the petroleum industry treats it as either an oligopoly or as purely competitive. This literature investigates such areas as: how many and who are the sellers and buyers in the market and what is the character of competition (intensity and form).[51]

Other representatives of the industry do not seem to agree that the industry is structurally atomistic or that its members are uncomplicated organizations. As stated in Fortune magazine in an article on the management of Standard Oil Company (New Jersey)(Exxon):

> It is already a tricky job to balance the conflicting interests of Jersey's producing, refining, and marketing affiliates in different countries.[52]

The necessity of a team effort to coordinate joint operations is implicit in a statement by Socony Mobil's (Mobil Oil) chairman when he testified

---

[50]The Oil and Gas Journal, January 15, 1962, p. 51.

[51]See for example, Joe S. Bain, Pacific Coast Petroleum Industry, (3 Vols.; Berkeley, California: University of California Press, 1944).

[52]Dan Cordtz, "They're Holding Their Feet to the Fire," Fortune, Vol. 82, (July, 1970), p. 83.

before the Senate Emergency Oil Lift Hearings:

> There are a lot of our companies in which we own interests directly that I don't have knowledge of . . . .[53]

This statement, made in 1957, was reaffirmed by Sueyuki Wakasugi, manager of Mitsui & Company, in 1971 when he stated: "Mitsui really is too complex to manage."[54]

One view, supported by some representatives of the industry and by standard economic theory, reduces to the idea that the petroleum industry is highly competitive. Other representatives of the industry think that it is more oligopolistic in nature. Still other representatives seem to think that the industry is complex and requires cooperative organization.

The Antitrust View

This view incorporates two types of literature. One type is government agency reports. The other type is research conducted from a critical standpoint. Both types of literature express the theme that the petroleum industry is typified by a general lack of competition. Both views argue that the industry is dominated by a few large companies.

Various government agencies have investigated the petroleum industry. A representative of the Antitrust Division in 1950 declared that the Division's ". . . major battles historically and daily have been

---

[53]U.S. Congress, Senate, Emergency Oil Lift Program and Related Oil Problems, Joint Hearings before Subcommitee of the Committee on the Judiciary and Committee on Interior and Insular Affairs, U.S. Senate, 85th Congress, 1st Session, (Washington, 1954), pt. 2, p. 1535.

[54]The Wall Street Journal, December 3, 1971, p. 24.

against the oil industry."[55] Prior to 1950, fifty-seven formal complaints, not including false advertising charges, were filed by the Federal Trade Commission.[56] Since 1950 there have been at least seven major investigatory studies of the industry by the federal government.

One study in 1952, by the Federal Trade Commission found that:

> . . . the outstanding characteristic of the world's petroleum industry is the dominant position of seven international companies.[57]

The Commission estimated that these seven companies owned 65 percent of the world's crude oil reserves. The Commission also charged that the companies used several devices to maintain control over the phases of petroleum operations. They argued that, "With decision-making thus concentrated in the hands of a small number of persons, a common policy may be easily enforced."[58] On the basis of this study, the Antitrust Division of the Department of Justice brought suit against five United States petroleum companies under the Sherman Act and the Wilson Tariff Act. The charges included market-sharing agreements, as well as the monopoly of oil production abroad and transportation and trade.[59]

---

[55] U.S. Congress, House, Interstate Oil and Gas Compact, Hearings before House Interstate and Foreign Commerce Committee, 81st Congress, 1st Session, 1951, p. 95.

[56] Simon N. Whitney, Antitrust Policies (New York: The Twentieth Century Fund, 1958), p. 100.

[57] U.S. Congress, Senate, The International Petroleum Cartel, Staff Report submitted to the Federal Trade Commission, 82nd Congress, 2nd Session, (1952), p. 23.

[58] Ibid., p. 29.

[59] Whitney, op. cit., p. 141.

A report published in 1970 lends support to the earlier evidence of concentration. This report consists of hearings before the Senate Subcommittee on Antitrust and Monopoly. Dr. John M. Blair, chief economist for the Subcommittee, while questioning a witness, made this statement:

> . . . let us talk about Venezuela for a moment. Two companies, Standard of New Jersey and Shell, account for 74 percent of the production and when Gulf and Texaco are added, four companies account for 85 percent.[60]

The next sample of literature examines works critical of the petroleum industry. Criticisms of the oil industry have nearly as long a history as the industry itself. The first systematic criticism started in the 1890's.[61] This type of literature continued into the 1950's. In 1955, Harvey O'Connor published The Empire of Oil. One theme in the book is that the United States oil industry is dominated by ten companies. Four of these ten, O'Connor maintains, are offsprings of the old Standard Oil Company. The other six are Gulf, Cities Service, Phillips, Shell Oil Company, Texas Company, and Sinclair.[62]

---

[60]U.S. Congress, Senate, Committee on the Judiciary, Governmental Intervention in the Market Mechanism, pt. 4. "The Cabinet Task Force on Oil Import Control: Majority and Minority Recommendations," before the Subcommittee on Antitrust and Monopoly, on S.R. 334, 91st Congress, 2nd Session, 1970, p. 1735.

[61]Henry Demarest Lloyd published Wealth Against Commonwealth in 1894. Ten years later came Ida Tarbell's History of the Standard Oil Company. In 1925, George W. Stocking published The Oil Industry and the Competitive System: A Study in Waste. The 1930's produced Myron W. Watkin's Oil: Stabilization or Conservation and William J. Kemnitzer's Rebirth of Monopoly: A Critical Analysis of Economic Conduct in the Petroleum Industry of the United States. Each of these studies is critical of the conduct of the oil industry. Charges ranging from monopoly to criminal and immoral acts are leveled at the industry.

[62]The name of the Texas Company has been changed to Texaco. Sinclair was merged into Atlantic Richfield.

The international oil industry, O'Connor says, is dominated by seven companies. The companies work in close connection with each other. As he states:

> These intermingled companies among themselves control the major oil resources of the world outside the Soviet sector. To say that they do not act in unison and with an understanding harmony would be to contradict their open affiliations in their joint enterprises. The harsh word "cartel" has been applied to their entente; this they deny, but production and prices throughout their world move together in majestic concord. The unseen hands which harmonize their efforts are above the control of such sovereigns as the United States and British governments.[63]

O'Connor charges the industry, both domestic and international, with gross exploitation. This exploitation, he claims, affects both domestic consumers and foreign countries.

A more recent example of this type of literature is a book by Robert Engler. Engler attempts to analyze the relationship between the power of the oil industry and the power of national governments. He also attempts to determine the influence of oil companies on public policies. The ability to influence these, Engler says, operates in both domestic and foreign policies. Domestically, the "depletion allowance" is an example of private influence. The oil industry has been able to maintain this tax law for nearly forty-five years. This maintenance, Engler claims, has often required that pressure be exerted on government representatives and officials.[64]

In foreign policy there are many episodes in which oil has been a key variable. Engler uses Iran as an example of one episode. He

---

[63] O'Connor, op. cit., p. 5.

[64] Robert Engler, The Politics of Oil (Chicago: The University of Chicago Press, 1962), pp. 158-160.

argues that when Prime Minister Mossadegh of Iran nationalized the Iranian oil industry, the United States refused to grant additional loans to Iran. Engler states:

> There is evidence that the United States also worked behind the scenes for the overthrow of Mossadegh that came in August 1953, with the Central Intelligence Agency playing a key part. . . .
>
> . . . . . .
>
> When Mossadegh was replaced, it was the American-trained and -equipped army of the Shah that supported his military successor who was pledged to come to terms with the Western private and public powers.[65]

In this survey an attempt has been made to examine the literature on both joint ventures and international industrial organization. It seems relevant to survey joint venture literature outside of the petroleum industry per se so that it can more readily be seen how this industry fits into the pattern for other industries. Also the legalities or illegalities of joint ventures should apply to the petroleum industry just as they apply to other industries. If the courts find certain types of joint ventures to be legal for one industry, it might be argued that these would be legal for other industries as well. With respect to the legality question, the converse should also be true.

It is also relevant to examine international industrial organization since the petroleum industry is part of this organization. Further, it is nearly impossible to disassociate joint ventures and multinational corporations. The central thrust of the international industrial organization literature is directed at multinational corporations. Since many petroleum companies are multinational, joint ventures among them would necessarily be joint ventures among multinational corporations.

---

[65] Ibid., pp. 205-206.

CHAPTER III

MAGNITUDE, PARTICIPATION AND CONTROL OF JOINT VENTURES

Four aspects of joint ventures are examined in this chapter. First, is an investigation of certain characteristics of exploration and drilling joint ventures and joint activities. An exploration and drilling joint venture is formed to undertake activities designed to discover oil. A joint venture is an organizational format, while joint activities are specific undertakings of the participants in a joint venture. Four joint activities, exploration, concessions, drilling, and discoveries, are discussed.

Second, the magnitude of joint ventures and joint activities, in ten geographic areas, is examined. The ten geographic areas are: Africa, Alaska, the Asia-Pacific area, Australasia, Canada, Central America, the Middle East, the North Sea, South America, and Western Europe.[1] In this examination is a discussion of the number of joint ventures and joint activities in the ten areas. It also includes an area by area comparison of the magnitude of joint ventures and joint activities. Differences and similarities between and among the areas with respect to these activities are examined.

---

[1]The countries included in each area are listed in the footnotes on pages 7-8 in Chapter I.

Third, is an investigation of participation in joint ventures and joint activities. Six groups of participants are distinguished. These groups are: the international majors, the international minors, local private capital, local governments, non-host governments, and "others." There are seven international majors: Standard Oil Company (New Jersey) (Exxon), Royal Dutch/Shell Group, Texaco, Mobil Oil Corporation, Standard Oil Company of California, Gulf Oil Corporation, and British Petroleum Company.

The group, international minors, has eighteen members: Standard Oil Company (Indiana), Atlantic Richfield Company, Tenneco Incorporated, Phillips Petroleum Company, Continental Oil Company, Sun Oil Company, Occidental Petroleum Corporation, Union Oil Company of California, Getty Oil Company, Standard Oil Company (Ohio), Ashland Oil Incorporated, Marathon Oil Company, Amerada-Hess Corporation, The Signal Companies, Compagnie Francaise des Petroles, Badische Anilin and Sodafabrik. and Petrofina, S.A.

The group, local private capital, includes individuals or small companies which operate in one area and are domiciled in that area. The group, local government, includes both local government companies, and local government agencies. Both primarily operate in their mother countries. These countries are usually oil exporters.

The group, non-host government, is made up of government companies and government agencies from the oil importing countries. These companies and agencies operate in all or almost all of the geographic areas studied, and are usually fully integrated enterprises.

The group "others" is made up of two types of participants. One

type is small companies whose main product is petroleum. Not all of these companies are integrated, but they participate in several geographic areas. The second type is companies which are not characteristically petroleum companies, but which occasionally participate in exploration and drilling joint ventures.[2]

Fourth, is an investigation of the control of joint ventures and joint activities in the ten areas. In this section the groups, local private capital, local governments, non-host governments, and "others" are consolidated into one group; this group is then designated "miscellaneous". The analysis concentrates upon the international majors, the international minors, and the group, "miscellaneous". The control of joint ventures and joint activities by these three groups is analyzed in the ten geographic areas.

Joint Activity Characteristics

Usually more than one joint activity eventuates from a joint venture; however, some joint ventures are formed to pursue one activity. Each of these joint activities has characteristics and anomalies which yield insight into the nature of exploration and drilling joint ventures.

Joint Exploration Activities

There are several types of exploration. Historically, the first geophysical method used to search for oil was the gravity survey. This method is mainly used in flat terrain when searching for salt domes. When

---

[2]The criteria for establishing each of the six groups is presented in Chapter I, pages 4-7.

the terrain is rough or the contrasts in rock densities is small, other methods must be used.[3]

Explosion seismology is more widely applicable than gravity studies. There are several methods of explosion seismology. Reflection shooting has been the most successful. This method uses the travel times of seismic waves from small explosions. A recording of travel times is made on portable seismographs. From these recordings, the buried strata can be deduced. The identification of the strata is accomplished by comparing travel times to different points. A short travel time indicates a more elastic structure and hence the possibility of oil or gas.[4] Oil is localized in structures and stratigraphic traps which are geologically determinable.

The most common type of exploration is the seismic survey. As a joint venture, seismic surveys have many fascinating characteristics. They are related to concessions and the other activities of exploration and drilling. This type of exploration occurs before and after concessions are granted. Before concessions are granted, large groups and one operating company (or a special firm hired by the companies) are common in seismic survey exploration.

The number of participants in seismic surveys ranges from two to twenty or more. Usually the group is composed of eight or more companies. Each participant has access to the information garnered from the survey. In return for this, each participant shares the costs.

---

[3]James Gilluly, Aaron C. Waters, A.O. Woodford, Principles of Geology (3rd ed.; San Francisco: W.H. Freeman and Company, 1968), p. 546.

[4]Ibid.

For example, extensive survey work was undertaken in Venezuela. Two different groups, one of ten companies and one of thirteen, conducted surveys in Lake Maracaibo. Another group of eight companies did surveys in Lake Maracaibo and the Gulf of Venezuela.[5] This pattern was found in eight of the ten areas. Africa and Central America are the exceptions.

The large group characteristics hold true in other areas, but the form varies. One variation is in the North Sea. Here seismic work was conducted by smaller groups. For example, in 1962 a group of three companies, British Petroleum Company, Ltd. (BP), Royal Dutch/Shell Group, and Standard Oil Company (New Jersey) (Exxon), conducted a survey covering 30,000 square miles of the British and Netherlands North Seas.[6] Phillips Petroleum Company and its partners conducted surveys in the Norwegian North Sea in 1962 and 1963. However, the individual cost to the companies was reduced by trading seismic data with other groups of firms which were also conducting surveys.[7] Pooling and trading data by these smaller groups implicitly creates a large group. Therefore, the results are much the same as in areas where a large group operates.

When seismic surveys are conducted, one of the member companies acts as operator or a special firm is hired by the group. If one of the companies is operator, this company uses its own staff and equipment to conduct the survey. The operator pays the costs and is then reimbursed

---

[5]See the Appendix, Table A10, Venture Numbers: 40, 41, and 42, pp. 353-356.

[6]See the Appendix, Table A9, Venture Number 3, p. 314.

[7]The Oil and Gas Journal, November 2, 1970, p. 106.

by the other members, or works from a budget of pooled funds. When the results are compiled, the operator makes the data available to the other members of the group. In two surveys in Venezuela, Mobil Oil Corporation was the operator, while in another, Standard Oil Company of California performed this function.[8]

If a special firm is hired by the group, it is usually a geological engineering company. This company performs the same functions as an operator. However, on some occasions the special firm may have more adequate equipment or personnel, or both, than the member firms. An example of a special firm being used is in Alaska. Offshore Navigation, Inc. was contracted by a ten company group to survey the Cook Inlet.[9]

Another variation of a special firm is Western Geophysical Company. The Company was created by British Petroleum Company and Elf/Erap (a French government agency) to do exploration in Gambia. Western is an equally owned joint subsidiary of its two creators.[10]

Member companies of a large group will often create smaller groups to buy concessions and continue surveying. For example, a group of twenty-six companies conducted a survey in the Beaufort Sea, which lies north of Alaska and includes Prudhoe Bay.[11] Out of this joint venture, several smaller joint ventures of two or three members emerged. One joint venture involves Humble Oil and Refining Company, a subsidiary of Standard

---

[8]See the Appendix, Table A10, Venture Numbers 40-42, pp. 353-356.

[9]The Oil and Gas Journal, March 16, 1959, p. 123.

[10]See the Appendix, Table A2, Venture Number 41, p. 213.

[11]See the Appendix, Table A3, Venture Number 14, pp. 238-240.

Oil Company (New Jersey) (Exxon), and Atlantic Richfield Company. The two 50-50 participants acquired 206 blocks in Prudhoe Bay and on the North Slope.[12] Members of this survey formed no less than twelve different joint ventures and bought concession blocks in the surveyed area.[13] This is typical of other areas where large groups conduct seismic surveys.

After concessions are granted, further seismic testing is conducted by the concession holding participants to determine drilling locations. Finding oil is a geological problem. The solution to this problem depends upon the application of many principles of geophysics, physics, petrography, paleontology, and chemistry.[14] Systematic surveying reduces the cost and waste involved in initial discovery and further development of oil fields; therefore, the large oil companies maintain geological departments.

Joint Concession Activities

A concession is defined as a land or water area which is leased or bought from a governmental unit by another government or by a private company. There are three basic types of concessions: exploratory, exploitation (or developmental), and producing.

An exploratory concession, as the name implies, is granted for the purpose of conducting preliminary exploration. The concession may be held for several years before any activity is undertaken by the holder. An exploratory concession usually is the least expensive for the leasee

---

[12]See the Appendix, Table A3, Venture Number 15, p. 240.

[13]See the Appendix, Table A3, Venture Numbers 15-26, pp. 240-242.

[14]Gilluly, Waters, and Woodford, op. cit., p. 547.

to acquire. For example, the average per acre price for exploration concessions in Venezuela in 1957 was approximately $44, while exploitation concessions had an average per acre price of approximately $751.[15]

An exploitation concession is granted for purposes of drilling for and producing oil. On such a concession activity usually begins shortly after the concession is granted. Seismic work is conducted and exploratory drilling takes place in strategic locations. If oil is discovered, the area is further developed and usually becomes a producing concession. If oil is not discovered, the concession may be retained by the leasee or returned to the government.

A producing concession begins as an exploratory or exploitation concession. Over time, an original concession is reduced to include only the area of the producing field or fields and the consequent capital equipment (storage tanks, drilling equipment, etc.). One reason for these relinquishments is to save royalty payments on concessions thought to be unproductive.

The concession granted to the Arabian American Oil Company (ARAMCO) in Saudi Arabia is an illustration of this phenomenon.[16] When the original concession was granted to Standard Oil Company of California in 1933, it covered the whole of eastern Saudi Arabia. This concession was primarily an exploratory concession. By 1939, additions to the original concession brought the total to 440,000 square miles. In 1947 a large area outside the producing zones was relinquished. In 1948 concession rights in the

---

[15] World Oil, August 15, 1957, p. 131.

[16] The ownership of this concession has changed over time. These changes are detailed below, p.149.

Neutral Zone were divested; in return, however, (under the new concept of "continental shelf") the company received offshore rights beyond the "territorial" waters. Relinquishments in 1955 and 1960 left the company with about a 300,000 square mile concession. A further divestment in 1963 reduced the concession to 125,000 square miles, with a provision for further reduction.[17] The concession is now in the process of being reduced from 125,000 square miles to 20,000 square miles. Under terms of the 1963 agreement, this company will be left with all of its established producing properties plus a large surrounding area for further exploration.

The size and shape of concession blocks vary from area to area. In the two newest areas, the North Sea and the North Slope of Alaska, the concession blocks are about the same size and shape.[18] An example of these blocks is shown in Figure 1. Most of these two areas is marked off in a grid, forming rectangular blocks. On the North Slope each block is approximately 2,560 acres, or four square miles.[19] The participants in joint ventures bid for each block.

The time or "newness" of concessions is not necessarily the reason for the uniform size and shape of concessions. A set of concessions recently granted in the East China Sea and offshore South Korea is not in the same pattern as the North Slope or the North Sea. In the East China Sea area the concessions are much larger (averaging 25,000 square miles)

---

[17]Homan, Schurr, and Associates, op. cit., pp. 116-117.

[18]The German and Danish North Seas are not in blocks, but the British, Scottish, and Norwegian, and Netherlands North Seas are in blocks.

[19]The Oil and Gas Journal, September 15, 1969, p. 25.

FIGURE 1

PETROLEUM CONCESSIONS, NORTH SEA, 1969

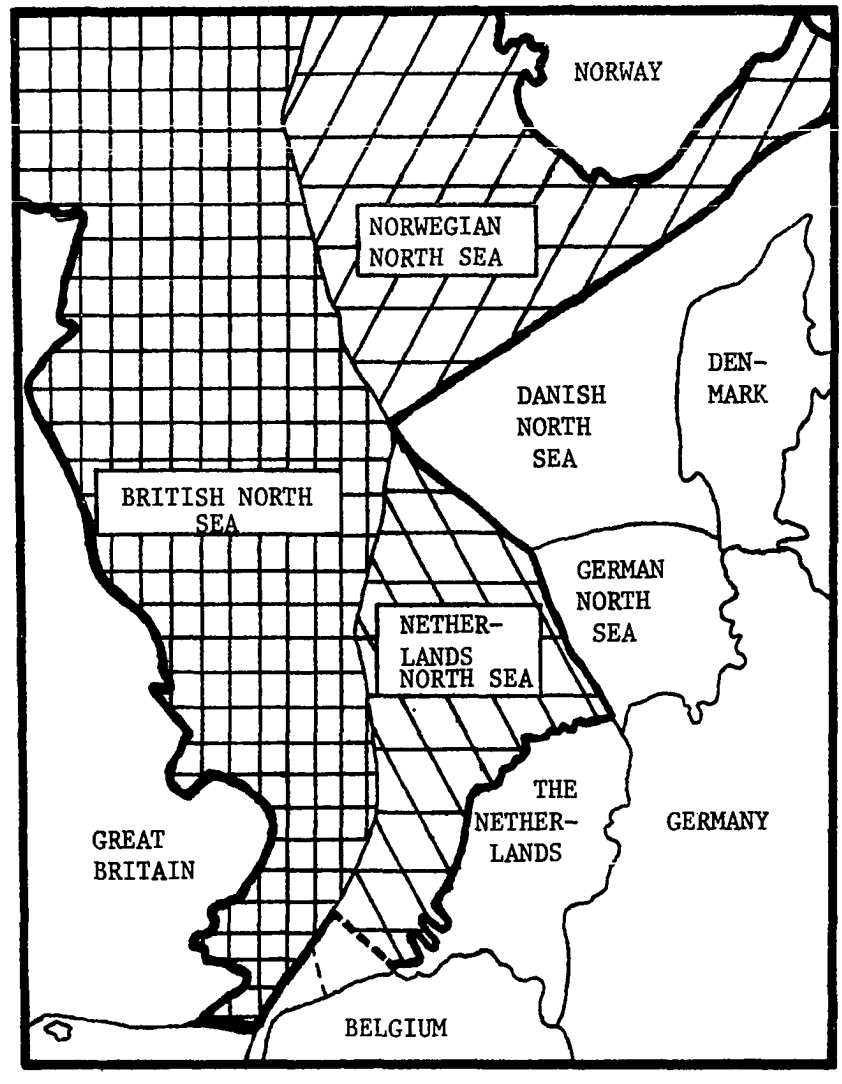

Scurce: World Oil, August 15, 1964, p. 74, and World Oil, August 15, 1969, p. 117.

and irregularly shaped.[20]

Concession blocks in the other eight areas are not typically uniform in size or shape. They vary significantly in size, ranging from 1 to 300,000 square miles. None of the old-producing regions have granted concession blocks in a grid pattern. A plat drawing reveals that the concessions in these areas usually do not follow a regular pattern. An example of these irregular blocks is shown in Figure 2.

A concession sometimes becomes a farmout agreement. In a typical farmout arrangement, one company assigns part of its concession to another company (or companies). The party taking the farmout usually agrees to assume the concession payments to the landowner. It further agrees to drill a well within a specified period of time. In return, the party receives a share of realized production. In addition, the party granting the farmout is entitled to the information gathered during the drilling operation.[21]

One example of a farmout is in Western Australia. Western Australian Petroleum Pty. Ltd. (WAPET) holds a 300,000 square mile concession. WAPET granted a 45,000 square mile farmout to Continental Oil Company of Australia, a subsidiary of Continental Oil Company, and Australian Sun Oil Company, a subsidiary of Sun Oil Company. Under the terms of the agreement Continental and Sun hold 25 percent each and WAPET retains 50 percent. This venture is further complicated since WAPET is itself a

---

[20]See the Appendix, Table A4, Venture Numbers 3, 4, 7, 8, 39, and 42, pp. 244-245, 254-255.

[21]John G. McLean and Robert Wm. Haigh, The Growth of Integrated Oil Companies (Boston: Harvard University Press, 1954), pp. 392-393.

FIGURE 2

PETROLEUM CONCESSIONS, LIBYA, 1966

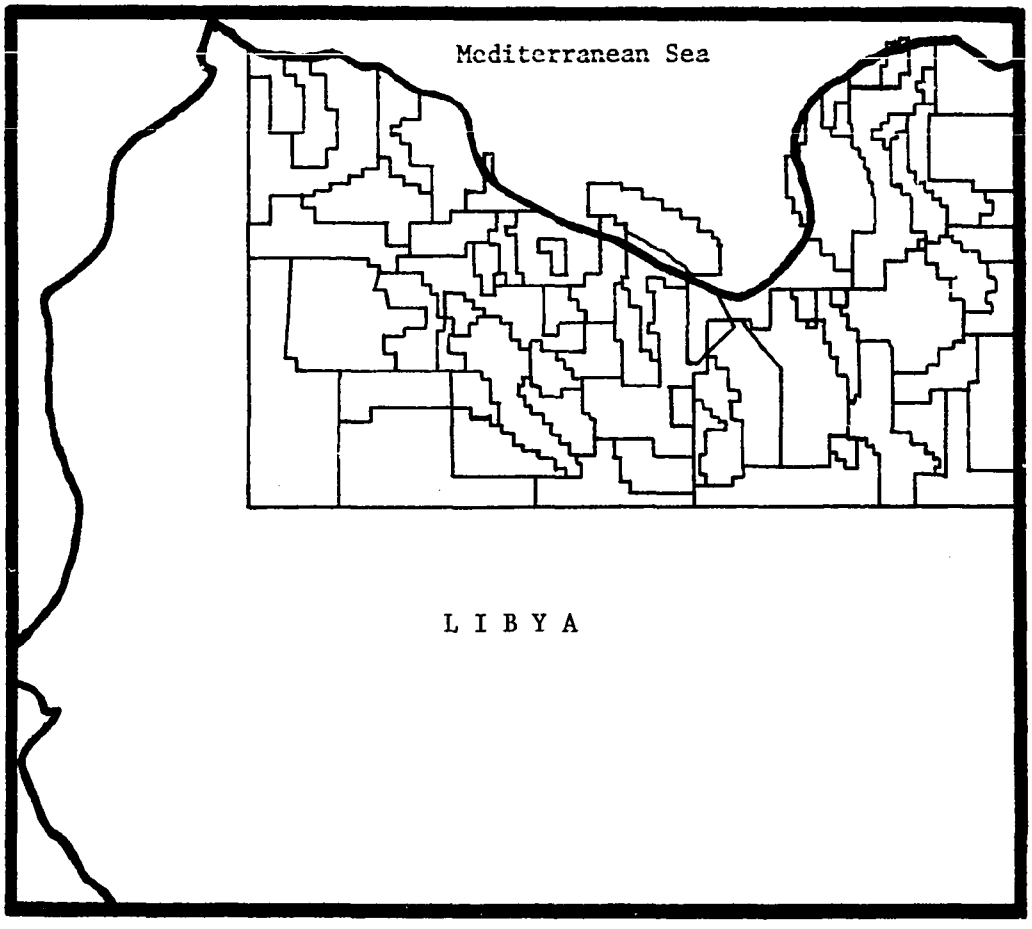

Source: The Oil and Gas Journal, February 28, 1966, p. 70.

joint venture. Three majors, Texaco Incorporated, Standard Oil Company of California, and Royal Dutch/Shell Group, each own 28.5 percent of WAPET. The other 14.5 percent is owned by Ampol Exploration Ltd., a private Australian company.[22]

Often a participant holds a large concession and will farm out more than one parcel to other companies. This is the case with the WAPET concession. WAPET also has a farmout agreement with Union Oil Development Corporation, a subsidiary of Union Oil Company of California, and another agreement with a group of French companies.[23]

Farmouts do not necessarily follow a pattern of being granted by majors to minors or others. For example, in Queensland, Australia, Union, and Kern County Land Company, a subsidiary of Tenneco Incorporated, each hold 50 percent of a 60,000 square mile concession.[24] Union and Tenneco developed the concession between 1960 and 1963. They brought in Moonie field, the first oil field in Australia, and began producing operations. In 1965, Esso Exploration (Australia), Incorporated, a subsidiary of Standard Oil Company (New Jersey) (Exxon), took a 15, 000 square mile farmout from Union and Tenneco. Standard receives 50 percent of the profits and pays development costs. Union, Tenneco, and Australia Oil and Gas Company each receive 16.67 percent of the profits.[25]

Farmout agreements are common in six of the ten areas. Besides

---

[22]See the Appendix, Table A6, Venture Number 2, p. 278.

[23]See the Appendix, Table A5, Venture Numbers 3 and 4, pp. 260-261.

[24]Australia Oil and Gas Company shares 20 percent of the profits in this venture. See the Appendix, Table A6, Venture Number 35, p. 289.

[25]See the Appendix, Table A6, Venture Number 24, p. 285.

Australia, farmout agreements occur in Alaska, the Asia-Pacific area, Canada, Central America, and South America.[26]

In the three types of concessions (not including farmouts) a total of about 3,552,000 square miles, or some 2.3 billion acres, of joint venture concessions were found. By way of comparison, the approximate land area of the continental United States is also 2.3 billion acres.[27]

This figure underestimates the total amount of joint concessions for two reasons. In the data presented in the Appendix, 606 joint concessions are reported for which the size was not found. Five hundred twenty-three of these are in the North Sea. The North Sea is about 164,900 square miles.[28] Except for some 100 blocks this area is virtually all joint venture concessions.

The estimated area for the other eighty-three joint concessions is 932,000 square miles. This estimate is based upon the average size of the known concessions in each area times the number of unknown concessions in each area. These calculations are presented in Table 1.

The figure for the North Sea is reasonably accurate. The estimate for the size of the other eighty-three unknown concessions should be considered approximate. If both figures are added to the total for the known concessions, the new total is 4,618,900 square miles of joint

---

[26]See the Appendix, Tables A3, A4, A5, A6, A7, and A10, pp. 233-298.

[27]U.S. Department of Commerce, Bureau of the Census, Statistical Abstract of the United States: 1971, 92nd ed., (Washington, D.C., 1971), p. 164.

[28]Newspaper Enterprise Association, Inc., The World Almanac and Book of Facts: 1972 Edition, ed. Luman H. Long, (Doubleday and Co., Inc., 1971), p. 424.

TABLE 1

NUMBER AND SIZE OF JOINT CONCESSIONS IN
TEN GEOGRAPHIC AREAS, 1957-1971

Area	Number of Concessions	Number of Concessions With Size Known	Size of Known Concessions (Square miles)	Estimated Size of Unknown Concessions (Square miles)
Africa	98	78	733,797	180,440
Alaska				
North Slope	669	669	2,676	0
Other Alaska	10	9	14,068	1,563
Asia-Pacific	50	41	944,062	188,100
Australasia	22	19	874,047	119,187
Canada	30	12	113,804	170,712
Central America	30	24	85,813	21,456
Middle East	41	34	547,805	128,898
North Sea	523	0	0	164,900[a]
South America	48	36	108,537	36,180
Western Europe	15	8	97,827	85,596
Total	1,536	930	3,522,436	1,097,032

Source: Calculated from data in the Appendix, Tables A2 Through A-11.

[a]The World Almanac and Book of Facts, 1972, p. 424.

concessions.

Second, the data presented in the Appendix is not definitive. With the exceptions of the North Sea and the North Slope of Alaska, each of the areas has more concessions which are joint ventures than are tabulated in the total.[29]

The number of concessions closely parallels the number of joint ventures in the areas, except Alaska and the North Sea. Since these two areas have much smaller concessions and each block is bought separately, these two areas have many more concessions than joint ventures. Each block is considered a separate concession, but not a separate joint venture. Almost all joint ventures have at least one concession involved. Out of 449 joint ventures in the ten areas, there are only 32 which have no concession involved.

Joint Drilling Activities

Drilling has not taken place on every concession. There are 462 (approximately 30 percent) concessions which have not been drilled upon.

There are two types of drilling: exploratory and developmental. Exploratory drilling is done after the results of seismic surveys and other exploration data are studied. After a well is drilled, jore data are available from the core logs.

If the well is dry, the information may be used to decide on another drilling location. The core results might also aid in deciding whether or not to drill another well. If oil is found, the core data become important in determining where other wells are drilled.

---

[29]The reasons for these ommissions are detailed on pages 57-58 of this chapter.

After an initial discovery, developmental drilling begins. The major problem is correlating oil beds between wells. If this problem can be solved, favorable structures may be further explored and unfavorable ones avoided. Three principal methods (lithologic, paleontologic, and electrical) are used. Lithologic correlations are based on well cuttings or cores. The rocks and minerals are studied for similarities and differences from well to well. Where the rocks are not readily distinguishable, paleontologic methods are sometimes applicable. Since large fossils are generally ground into tiny particles in drilling, the principal paleontological materials are micro-fossils. Some fossil zones can be distinguished and traced from one oil field to another nearby field.[30]

The most widely used method of correlation is the electric log. Electrodes lowered into a well measure the differences in the electrical characteristics of the beds. The characteristics reveal differences and similarities in the composition and porosity of the rocks. It also reveals the kind of fluid, oil, salt water, or fresh water, that occupies the pores of the rocks.[31]

Often core information is shared by companies. When Amoco Norway, a subsidiary of Standard of Indiana, and its partners drilled a well in the Norwegian North Sea, Phillips Petroleum Company and its partners shared the information. The Phillips Group participated in the Amoco Group's drilling venture via bottom-hole money. This represents partial payment of the drilling costs. In return, the Phillips Group received full access

---

[30]Gilluly, Waters, and Woodford, op. cit., p. 546.

[31]Ibid., pp. 546-547.

to the core data.[32]

Another example of drilling cost sharing is between Mobil Producing North Sea, Ltd., a subsidiary of Mobil Oil Corporation, and Continental Oil Company of England, a subsidiary of Continental Oil Company. An exploratory well was drilled on Mobil's block, with Continental acting as operator. Continental and Mobil shared the drilling costs. Adjacent to Mobil's block is a block owned by Continental. The two companies were exploring what they thought to be a common structure underlying both blocks.[33]

Joint Discoveries

All drilling is not exploratory. When an initial discovery is made, more wells are drilled to ascertain whether or not the discovery is commercial.

Two of the newest exploratory regions, the North Slope of Alaska and the North Sea, have experienced recent discoveries. Two examples are the Prudhoe Bay Field on Alaska's North Slope and Ekofisk field in the Norwegian North Sea. Two of the oldest producing areas, the Middle East and South America, have experienced recent commercial crude oil discoveries. For example, discoveries have been made in the Dacion field in Venezuela and the Pare-e Siah Field in Iran. Joint venture discoveries are not, therefore, restricted to new areas.[34]

---

[32]The Oil and Gas Journal, November 16, 1970, p. 124.

[33]The Oil and Gas Journal, August 1, 1966, p. 99. See also the Appendix, Table A9, Venture Number 14, p.

[34]The Oil and Gas Journal, December 27, 1971, p. 99 and p. 105.

The category, discoveries, is the least comprehensive of the four phases examined in this study. The data in this category are only for commercial crude oil discoveries. Drilling will sometimes result in a natural gas discovery. These discoveries are not included in the data.

Magnitude

The number of joint ventures increased throughout the period 1957-1971. The tabulation by year reveals a steady increase in joint ventures in each area. For example, in 1957 there were twelve joint ventures in Africa. This number had increased to over one hundred by 1971.[35] The other areas did not experience as rapid an increase as Africa; however, each area had a marked increase.[36]

The number of joint ventures and activities within these ventures is contained in the Appendix. The original data contain more joint ventures in each area than are shown in the Appendix. While the original data is not exhaustive, it is thought by the author to be representative of each area. The joint ventures selected for the Appendix are representative of the original data. For example, only fifteen joint ventures out of approximately thirty-eight were selected for Western Europe.

Many of the ventures have the same participants. The only difference is the activity undertaken. When this occurred, the duplications were deleted from the Appendix. Also, fewer joint ventures were found in Western Europe than in the other areas. Further, while a relatively old producing area, Western Europe produces less oil than any of the ten

---

[35]See the Appendix, Table A2, pp. 199-231.

[36]See the Appendix, Tables A3 through A-11, pp. 233-364.

areas selected.

Africa, on the other hand, has few duplications of joint ventures. In order to be representative, more ventures were included. Also due to its size, number of countries, and the intensity of activity between 1957 and 1971, Africa has more joint ventures (120) than the other areas. Furthermore, while Africa is a relatively new producing area, its oil production has increased significantly since 1957. As of this writing, it is the second largest producing area of the ten selected.[37]

Other areas had about the same number of joint ventures. Alaska had 51, the Asia-Pacific area 84, Australasia 76, Canada 92, Central America 68, the Middle East 73, the North Sea 85, and South America had 73 joint ventures.[38] The joint ventures for each area were selected to avoid as much duplication as possible. However, not to duplicate on many occasions would have been a misrepresentation of the intensity of joint ventures entered into by the same participants.

The magnitude of joint ventures and the four joint activities in the ten geographic areas is the next subject examined. From the data in Table 2, several relationships can be ascertained. Each of the ten areas has a significant number of joint ventures and joint activities. In 449 joint ventures, there are 2,105 joint activities. Each of the activities, exploration, concessions, drilling, and discoveries, are present in the ten areas.

Joint exploration accounts for 5 percent of the joint activities

---

[37] The Oil and Gas Journal, December 27, 1971, pp. 72-73.

[38] See the Appendix, Tables A3 through A10, pp. 233-358.

TABLE 2

EXPLORATION AND DRILLING JOINT VENTURES, BY TYPE OF ACTIVITY AND AREA, 1957-1971

Area	Total Ventures	Type of Activity				
		Exploration	Concession	Drilling	Discovery	Total
Africa	102	38	98	52	36	224
Alaska	28	4	679	27	19	729
Asia-Pacific	49	9	50	16	7	82
Australasia	39	17	22	41	23	103
Canada	36	7	30	37	24	91
Central America	34	7	30	22	5	64
Middle East	44	3	41	21	13	78
North Sea	51	14	523	32	15	584
South America	51	9	48	36	21	114
Western Europe	15	1	15	12	4	32
Total	449	109	1,536	293	167	2,105

Source: Compiled from data in the Appendix, Tables A2 through A-11.

TABLE 3

PARTICIPATION IN JOINT ACTIVITIES, TEN AREAS, 1957-1971

Activity	Joint Activities	Participant					
		Majors	Minors	Local Capital		Non-Host Government	Others
				Private	Government		
Exploration	109	57	57	17	20	23	45
Concession	1,536	896	1,100	177	171	196	432
Drilling	293	162	175	52	46	41	120
Discovery	167	92	103	28	28	27	65
Total	2,105	1,207	1,435	274	265	287	662

Source: Compiled from data in the Appendix, Tables A2 through A-11.

in the ten areas. Africa has the largest number of joint exploration activities and Western Europe has the least.

Joint concessions account for nearly three-fourths of the number of joint activities in the ten areas. Alaska and the North Sea have the largest number of joint concessions and Western Eruope has the least number of joint concessions. In eight of the ten areas there are more joint concessions than any of the other three joint activities.

Joint drilling accounts for 14 percent of the number of joint activities in the ten areas. In two areas the magnitude of joint drilling is the largest among the four joint activities. In the other eight areas, its magnitude is the second largest among the joint activities.

Joint discoveries account for 8 percent of the number of joint activities in the ten areas. In seven areas the magnitude of joint discoveries is third among the four joint activities, and in three areas its magnitude is less than each of the other joint activities.

The five areas with the most activity are Alaska, the North Sea, Africa, South America, and Australasia. There are 271 joint ventures in these areas, and within these ventures there are 1,754 joint activities. These five areas account for over 80 percent of the joint activities in the ten areas.

The largest number of joint activities is in Alaska. Alaska has about 6 percent of the joint ventures, but about one-third of the joint activities in the ten areas. Joint concessions account for over 90 percent of the number of joint activities in Alaska. The remaining activities are primarily drilling and discoveries. Exploration represents less than one percent of the total activity in Alaska. Perhaps one reason

for this is the structure of exploration activities in this area. Since exploration surveys are conducted by large groups, the number of exploration activities is considerably reduced.

The second largest number of joint activities is in the North Sea. The North Sea has about 10 percent of the joint ventures and nearly 30 percent of the joint activities in the ten areas. Joint concessions make up almost 90 percent of the joint activity in the North Sea, while about 5 percent of the activity is joint drilling. Joint discoveries and joint exploration account for the remaining 5 percent of the North Sea's activity.

The third largest number of joint activities is in Africa. This area has about one-fourth of the joint ventures and about one-fifth of the joint activities in the ten areas. Once again, concessions represent the largest number of activities. Joint concessions account for about one-half of the joint activity in Africa. Drilling represents almost one-fourth of the activity and exploration and discoveries account for the remaining one-fourth.

The fourth largest number of joint activities is in South America. This area has about 10 percent of the joint ventures and 5 percent of the joint activities in the ten areas. Concessions account for about one-half of the joint activities in South America, while drilling represents about one-third. Discoveries account for about one-fifth and exploration accounts for nearly one-tenth of the joint activity.

The fifth largest number of joint activities is in Australasia. Australasia has about one-tenth of both the joint ventures and the joint activities in the ten areas. In Australasia drilling represents one-half

of the activity. Discoveries and concessions each account for about one-fifth of the joint activity and exploration represents one-fourth of the joint activity.

In summary, an analysis of the joint activities in these five areas reveals that exploration accounts for less than 5 percent, the smallest percentage among the four activities. In the first four areas, concessions represent the largest percentage of activity, while in Australasia, concessions rank third among the four activities. Drilling and discoveries are second and third, respectively, in the first four areas, and first and second, respectively, in Australasia.

The remaining five areas, in order of total joint activity are: Canada, the Asia-Pacific area, the Middle East, Central America, and Western Europe. These areas have about two-fifths of the joint ventures and about 16 percent of the joint activities in the ten areas. In four of these areas, concessions represent the largest part of the joint activity.

Participation

This section is devoted to an examination of the participation of different groups in joint activities and joint ventures. Six groups are delineated: majors, minors, local private capital, local governments, non-host governments, and "others".

Participation in a joint venture and the consequent activities undertaken often involve more than one of the groups. This complicates the tabulation procedure for participation in joint ventures and activities. For example, one major, one minor, and a government company may

each be participants in a single joint venture involving a concession and two drilling activities. In this case, each group is counted as participating in one joint concession and two joint drilling activities. If more than one member of a group participates in a joint venture and only one joint activity is involved, one activity is counted for the group; if two activities are involved, two activities are counted for each group and so on. For example, five majors and three minors may be participants in a joint venture involving two exploration activities and one concession. In this case, each group (majors and minors) would be counted as participating in two joint exploration activities and one joint concession. Since more than one group participates in several of the joint ventures, group participation percentages will add to over 100 percent.

International Majors

The majors, as a group, participate in 224 joint ventures. This is one-half of the number of joint ventures in the ten areas. They participate in more joint ventures than the other groups in three areas: Australasia, the Asia-Pacific area, and Western Europe. Except for Africa at the highest extreme, and Western Europe at the lowest extreme, the majors participate in about the same number of joint ventures in each area. The majors' percentage of participation is lowest in Africa and highest in Western Europe. In Alaska the majors participate in three-fourths of the joint ventures. Their participation in joint ventures in the other seven areas ranges from 64 percent (in Canada) to 43 percent (in the Middle East and the North Sea).

At least one major is a participant in 57 percent of the joint activities in the ten areas. The majors participate in about 60 percent of the joint concessions in the ten areas. This group participates in more joint concessions than in any of the other joint activities. They participate in about one-half of the joint exploration in the ten areas. In both joint drilling and joint discoveries they participate in over half of the activity.

The majors participate in all four of the joint activities in eight of the areas. In the other two areas, they participate in three of the joint activities. In Western Europe and the Middle East, the majors do not jointly participate in exploration. A probable explanation for this is that both of these areas are old producing areas for the majors. Most of their exploration was probably done before the time period of this study.

The majors participate in more joint activities than the other groups in three areas: the Asia-Pacific area, Australasia, and Western Europe. They are second in four areas: Alaska, Canada, the North Sea, and South America. Except for the group, "others", the majors are second in Central America and the Middle East. In Africa they rank fourth behind the minors, non-host governments, and "others".

From a percentage standpoint, the two areas of greatest participation are Alaska and Western Europe. In Alaska the majors participate in more than three-fourths of the activities. They participate in about three-fourths of the concessions and drilling activities, about two-thirds of the joint discoveries, and 100 percent of the exploration.

The two areas of greatest participation, in terms of absolute

TABLE 4

JOINT VENTURES AND JOINT ACTIVITIES BY GEOGRAPHIC AREA,
BY TYPE OF ACTIVITY, AND BY PARTICIPANT, 1957-1971

Area and Activity	Number of Joint Activities	Majors	Minors	Local Capital		Non-Host Government	Others
				Private	Government		
Africa	224	82	135	1	63	97	111
Exploration	38	11	23	0	11	17	21
Concessions	98	35	61	1	26	45	49
Drilling	52	20	34	0	15	20	25
Discoveries	36	16	17	0	11	15	16
Joint Ventures	-	36	58	1	28	47	56
Alaska	729	558	649	0	0	2	29
Exploration	4	4	3	0	0	0	3
Concessions	679	520	605	0	0	2	23
Drilling	27	21	22	0	0	0	3
Discoveries	19	13	19	0	0	0	0
Joint Ventures	-	21	23	0	0	2	6
Asia-Pacific	82	37	31	16	33	8	31
Exploration	9	6	3	2	3	0	2
Concessions	50	23	20	10	20	6	20
Drilling	16	6	5	3	7	2	6
Discoveries	7	2	3	1	3	0	3
Joint Ventures	-	22	21	3	21	6	24
Australasia	103	60	41	61	0	2	44
Exploration	17	13	5	8	0	0	6
Concessions	22	9	10	9	0	0	10
Drilling	41	25	17	27	0	1	17
Discoveries	23	13	9	17	0	1	11
Joint Ventures	-	23	14	22	0	4	19

(continued)

TABLE 4 (Continued)

Area and Activity	Number of Joint Activities	Majors	Minors	Local Capital		Non-Host Government	Others
				Private	Government		
Canada	96	66	82	5	0	8	49
Exploration	7	4	5	1	0	3	2
Concessions	30	19	25	2	0	2	18
Drilling	35	26	31	1	0	3	17
Discoveries	24	17	21	1	0	0	12
Joint Ventures	-	23	29	12	0	4	18
Central America	64	29	31	8	13	1	37
Exploration	7	3	5	0	0	0	4
Concessions	30	13	15	3	5	1	18
Drilling	22	11	10	3	5	0	13
Discoveries	5	2	1	2	3	0	2
Joint Ventures	-	16	22	4	4	1	23
Middle East	78	30	48	3	30	19	40
Exploration	3	0	1	1	2	0	1
Concessions	41	18	24	1	17	9	23
Drilling	21	8	13	1	7	6	10
Discoveries	13	4	10	0	4	4	6
Joint Ventures	-	19	26	1	17	9	28
North Sea	583	252	335	164	94	146	283
Exploration	14	9	5	4	1	3	3
Concessions	523	223	301	144	87	129	254
Drilling	31	14	19	11	3	8	17
Discoveries	15	6	10	5	3	6	9
Joint Ventures	-	22	36	3	4	17	31

(continued)

TABLE 4 (Continued)

Area and Activity	Number of Joint Activities	Majors	Minors	Local Capital		Non-Host Government	Others
				Private	Government		
South America	114	65	79	7	19	4	32
Exploration	9	7	6	0	3	0	3
Concessions	48	23	37	3	10	2	14
Drilling	36	20	23	2	4	1	10
Discoveries	21	15	13	2	2	1	5
Joint Ventures	-	29	37	3	10	2	14
Western Europe	32	28	4	9	13	0	6
Exploration	1	0	1	1	0	0	0
Concessions	15	13	2	4	6	0	3
Drilling	12	11	1	4	5	0	2
Discoveries	4	4	0	0	2	0	1
Joint Ventures	-	13	3	3	4	0	5

Source: Compiled from data in the Appendix, Tables A2 through A-11.

numbers, are Alaska and the North Sea. In the North Sea the majors participate in 252 joint activities. They are participants in 9 joint exploration activities, 233 joint concessions, 14 joint drilling activities, and 6 joint discoveries in the North Sea.

In the other areas, the majors' participation is relatively similar to those discussed above. Their participation in joint activities ranges from about 90 percent in Western Europe to about 40 percent in both Africa and the Asia-Pacific area.

International Minors

The minors, as a group, participate in three-fifths of the number of joint ventures in the ten areas. They participate in more joint ventures than the other groups in seven areas. Their two areas of greatest participation, in terms of percentages, are Alaska and Canada. In Alaska they are involved in 89 percent of the joint ventures and in Canada they are involved in 81 percent. The minors participate in more joint ventures in Africa than in the other areas, and they participate in fewer ventures in Western Europe than in the other areas. This is the exact inverse of the majors' participation in these two areas. In terms of percentages, Western Europe is also the area of least participation for the minors. The percent of participation in the other six areas ranges from 36 in Australasia, to 73 percent in South America.

The minors participate in four of the joint activities in nine areas and three of the joint activities in the tenth area. They do not participate in joint discoveries in Western Europe.

The international minors are participants in about two-thirds of

the number of joint activities in the ten areas. The minors' greatest participation is in joint concessions. They participate in 72 percent of the joint concessions in the ten areas. The minors are involved in about 60 percent of both the joint discoveries and joint drilling activities in the ten areas. Both the minors and majors participate in 57 percent of the joint exploration activities.

The minors participate in more joint activities than the other groups in six areas: Africa, Alaska, Canada, the Middle East, the North Sea, and South America. They are second to "others" in participation in Central America. The minors are third in participation in the Asia-Pacific area, fourth in Australasia, and fifth in Western Europe.

Alaska is the minors' area of greatest participation, in terms of both absolute numbers and in terms of percentages. They participate in about 90 percent of the joint activities in this area. They are participants in over 80 percent of both the joint concessions, and the joint drilling activities, three-fourths of the joint exploration activities, and 100 percent of the joint discoveries.

The minors participate in 85 percent of the joint activities in Canada, which is their second largest percentage of participation in an area. They participate in over 80 percent of the joint drilling, discoveries, and concessions, and over 70 percent of the joint exploration in Canada.

In the other areas, the minors' participation is similar to the two areas discussed above. They participate in about 70 percent of the joint activities in South America, about 60 percent in the Middle East, the North Sea, and Africa. In Central America the minors participate in

about half of the joint activities, while in Australasia and the Asia-Pacific area, they are participants in about two-fifths of the activity. In Western Europe the minors participate in slightly more than a tenth of the joint activities.

Local Private Capital

Participants in the category, local private capital (LPC), are involved in about one-tenth of the joint ventures in the ten areas. LPC takes part in joint ventures in eight of the ten areas. It has no participation in Africa or Alaska.

LPC is involved in 13 percent of the joint activity in the ten areas. This group participates in eighteen percent of the joint drilling activities in the ten areas. Joint drilling is the activity in which LPC has its greatest amount of participation. Its next strongest concentration of activity is joint discoveries; LPC participates in 17 percent of this activity in the ten areas. Closely following these two joint activities is joint exploration. LPC participates in 16 percent of the joint exploratory activities in the ten areas and 12 percent of the joint concessions.

LPC's area of greatest participation, in absolute numbers, is the North Sea. In this area the group is involved in a small number of joint ventures, but is involved in about 30 percent of the joint activities. Concessions represent the largest portion of these activities. The LPC group is involved in about 30 percent of the North Sea's joint concessions. The group participates in about one-third of the joint discoveries, drilling, and exploration activities.

From a percentage standpoint, LPC has its greatest amount of activity in Australasia; it is second only to the majors, which have the largest amount of participation in this area. In Australasia, the LPC group participates in over half of both the joint activities and the joint ventures. LPC is involved in about three-fourths of the joint discoveries, three-fifths of the joint drilling activities, and about two-fifths of both the exploration and concession activities in Australasia.

LPC's participation in joint activities in the remaining six areas ranges from 28 percent in Western Europe to 4 percent in the Middle East. Further, LPC participates in about one-tenth of the joint ventures in these six areas.

Local Governments

Local governments participate in about one-fifth of the joint ventures in the ten areas. Local governments participate in joint ventures in seven of the ten areas. They do not participate in joint ventures in Alaska, Australasia, and Canada.

Local governments are involved in about one-fifth of the joint exploration activities in the ten areas. Joint exploration is the activity in which they have the largest amount of participation. Local governments' next largest concentration of activity is in joint discoveries; they participate in 17 percent of these activities in the ten areas. Local governments are involved in fewer joint concessions and joint drilling activities in the ten areas than the other five groups.

Local governments' greatest amount of participation in percentage terms is in Western Europe and in the Asia-Pacific area. They have the

second largest amount of participation in Western Europe (the majors have the largest). In this area, local governments are involved in about two-fifths of the joint activities. They are not involved in exploration activities, but they participate in one-half of the joint discoveries, and about two-fifths of both the joint drilling activities and joint concessions.

Local governments' greatest amount of participation, in absolute numbers, is in the North Sea. They participate in 94 joint activities in this area. Most of their joint activity is in joint concessions, which account for over 90 percent of their joint activity in this area.

In the remaining four areas, Africa, the Middle East, South America, and Central America, local governments' participation in joint activities ranges from 38 percent to 17 percent. They are involved in 59 joint ventures and 125 joint activities in these four areas.

Non-host Governments

Non-host governments (NHG) participate in about one-fifth of the joint ventures in the ten areas. NHG's participate in joint ventures in nine of the ten areas; they are not involved in joint ventures in Western Europe.

In the ten areas NHG's participate in 14 percent of the joint activities. Their greatest amount of participation is in joint exploration; they are involved in about one-fifth of these activities. These governments participate in about 15 percent of both the joint discoveries and joint drilling activities in the ten areas. NHG's participate in fewer joint drilling activities than the other groups. Thirteen percent of the

joint concession activities involve NHG's.

In percentage terms, NHG's greatest amount of participation is in Africa; they participate in over 40 percent of both the joint activities and joint ventures in this area. Much of this participation is in Algeria and Spanish Sahara. Several French agencies and companies, especially Elf/Erap, participate in joint ventures in Algeria. An Italian government company, ENI, also participates in several joint ventures in Africa.

In terms of absolute numbers, NHG's greatest amount of participation is in the North Sea where they participate in 17 joint ventures and 146 joint activities. Concessions represent nearly 90 percent of NHG's joint activity in the North Sea. Most of this participation is by the Italian government company, ENI.

"Others"

The group, "others", participates in one-half of the joint ventures in the ten areas. This group is involved in joint ventures in each of the ten areas. "Others" participate in about one-third of the joint activities in the ten areas. In exploration, drilling, and discoveries, this group participates in about two-fifths of the joint activities in the ten areas. "Others" are involved in about 30 percent of the joint concessions in the ten areas.

Their participation in joint activities in the ten areas ranges from 57 percent in Central America to 4 percent in Alaska.

In summary, the analysis of group participation reveals that joint ventures and joint activities are dominated by the majors and the minors. These two groups rank first and second in the amount of parti-

cipation in joint activities in six of the ten areas. The majors and minors also rank first and second in joint venture participation in seven of the ten areas.

Individual Company Participants

The individual participants are the next subject for examination. The ten companies participating in the most joint ventures will be discussed. Only single participants will be considered in this discussion. That is, groups, such as local private capital, will not be compared to a company participant. These comparisons involve only the number of joint ventures and not the size of the ventures. A company may participate in fewer joint ventures than other companies; however, the ventures it participates in may be larger, in terms of sales or assets, than several small joint ventures combined. For example, Standard of New Jersey (Exxon) is, by any measure of size, the largest international oil company in the world.[39] The joint ventures in which it participates are among the largest in the world. However, Jersey does not participate in as many joint ventures as other companies.

Royal Dutch Shell participates in more joint ventures than the other company participants. This company is involved in 85 joint ventures, or about one-fifth of the ventures in the ten areas. Shell participates in more joint ventures than the other participants in two areas: the Middle East and Western Europe. Shell has the second largest amount of participation in three areas and does not rank lower than sixth in

---

[39]The size, in terms of sales, of the company participants in joint ventures is presented in the Appendix, Table A1, pp. 197-198.

any area.

Texaco ranks second in joint venture participation. It is involved in 64, or 14 percent, of the joint ventures in the ten areas. Texaco participates in more joint ventures than the other participants in one area, South America. It is second in participation in the Asia-Pacific area, and third in both Australasia and Western Europe. Texaco ranks tenth in participation in Canada, its lowest rank in the ten areas.

Standard Oil Company (New Jersey) (Exxon) ranks third in joint venture participation. Jersey participates in 61, or 14 percent, of the joint ventures in the ten areas. This company participates in more joint ventures in Canada than the other companies and has the second largest amount of participation in Western Europe. It has its least amount of participation in the Asia-Pacific area, where it ranks eleventh among the participants.

Standard Oil Company of California (SOCAL) and Mobil Oil Corporation each participate in 55 joint ventures. This is 12 percent of the joint ventures in the ten areas, which puts these two corporations in fourth position in joint venture participation. SOCAL participates in more joint ventures in Central America than the other companies. Mobil does not have the largest amount of participation in any area, but does participate in the second largest number of joint ventures in Western Europe. SOCAL also ranks second in one area, Alaska. Mobil's smallest amount of participation is in the North Sea, where it ranks twelfth among the participants. SOCAL ranks eleventh in participation in the Asia-Pacific area, its least amount of involvement in joint ventures.

Gulf Oil Corporation has the sixth largest amount of participation

TABLE 5

JOINT VENTURE PARTICIPATION BY COMPANY AND BY GEOGRAPHIC AREA, 1957-1971

Participant	Geographic Area				
	Africa	Alaska	Asia-Pacific	Australasia	Canada
Standard of New Jersey	7	5	2	6	10
Royal Dutch Shell	15	9	4	10	5
Texaco Incorporated	6	5	6	9	4
Mobil Oil Corporation	7	5	3	6	5
Gulf Oil Corporation	4	4	7	2	9
Standard of California	6	12	4	7	2
British Petroleum Company	6	4	3	11	4
Standard of Indiana	10	6	5	0	7
Atlantic Richfield Company	5	13	2	2	5
Continental Oil Company	6	2	6	5	7
Philips Petroleum Company	7	5	3	3	7
Union Oil Company of California	4	8	4	4	2
Tenneco Incorporated	3	1	2	3	3
Occidental Oil Corporation	4	2	0	0	0
Sun Oil Company	3	5	0	6	5
Cities Service Company	5	2	1	0	0
Ashland Oil Company	4	2	2	0	1
Standard of Ohio	2	1	0	0	0
Amerada-Hess Corporation	6	1	0	1	1
Getty Oil Company	2	4	2	0	4
The Signal Companies	2	1	0	0	0
Marathon Oil Company	3	5	1	1	3
Compagnie Francaise des Petroles	16	0	1	3	4
Badische Anilin und Sodafabrik	2	0	0	0	0
Petrofina S.A.	0	1	0	0	2

(continued)

TABLE 5 (Continued)

Participant	Geographic Area					
	Central America	Middle East	North Sea	South America	Western Europe	Total
Standard of New Jersey	1	7	8	10	5	61
Royal Dutch Shell	6	10	9	9	8	85
Texaco Incorporated	4	5	6	15	4	64
Mobil Oil Corporation	2	8	3	11	5	55
Gulf Oil Corporation	5	3	7	9	4	54
Standard of California	7	3	6	4	4	55
British Petroleum Company	1	7	6	2	1	45
Standard of Indiana	1	2	4	6	0	41
Atlantic Richfield Company	5	3	4	13	0	52
Continental Oil Company	1	5	7	8	1	48
Phillips Petroleum Company	4	6	10	7	0	52
Union Oil Company of California	2	5	1	8	0	38
Tenneco Incorporated	2	1	1	4	0	20
Occidental Oil Corporation	1	0	0	2	0	9
Sun Oil Company	1	4	3	11	0	38
Cities Service Company	0	1	2	3	0	14
Ashland Oil Company	1	1	0	1	0	12
Standard of Ohio	1	1	0	0	0	5
Amerada-Hess Corporation	1	0	2	2	0	14
Getty Oil Company	0	2	0	1	0	15
The Signal Companies	2	1	3	3	0	12
Marathon Oil Company	0	0	3	5	1	22
Compagnie Francaise des Petroles	0	9	7	0	1	41
Badische Anilin und Sodafabrik	0	2	3	2	1	10
Petrofina S.A.	0	0	8	0	0	11

Source: Compiled from data in the Appendix, Tables A2 through A-11.

in joint ventures. Gulf is in one less joint venture than Mobil and SOCAL. Its 54 ventures represent 12 percent of the ventures in the ten areas. Gulf participates in the most joint ventures in the Asia-Pacific area and the second largest number in Canada. This corporation ranks third in participation in both Western Europe and Central America. In Gulf's two areas of least participation, Australasia and the Middle East, it ranks eleventh.

Phillips Petroleum Company and Atlantic Richfield Company (ARCO) each participate in 52 joint ventures. This is 11 percent of the joint ventures in the ten areas which places these two companies in seventh position among the participants. ARCO participates in more joint ventures in Alaska than the other companies, while Phillips participates in more joint ventures than the other companies in the North Sea. ARCO ranks second in participation in South America and third in Central America. Phillips is *not* second in any area, but is third among the participants in Canada. Both companies are involved in joint ventures in nine areas, but their participation is limited in some of these areas.

Ninth among the participants is Continental Oil Company (Conoco). Conoco is involved in 48, or 10 percent, of the joint ventures in the ten areas. This company does not rank first in any area, but has the second largest amount of participation in the Asia-Pacific area and the third largest in Canada. Although its participation is limited in some of the areas, Conoco is the only minor to participate in joint ventures in each of the ten areas.

The British Petroleum Company (BP) has the tenth largest amount of participation in joint ventures. BP is involved in 45, or 10 percent,

of the joint ventures in the ten areas. It participates in more joint ventures than the other companies in Australasia. BP's next largest area of joint venture participation is the Middle East, where it ranks fourth among the participants. BP is thirteenth among the participants in South America, its area of least participation.

Only one of the remaining participants shown in Table 5, Compagnie Francaise des Petroles (CFP), ranks higher than third in any area. CFP has the largest amount of participation in Africa, and the second largest amount in the Middle East. However, CFP participates in less than 10 percent of the joint ventures in the ten areas and is not involved in joint ventures in three areas.

A major has the largest participation in seven areas and has the second largest amount of participation in eight areas. One of the majors has either the largest or the second largest amount of participation in each of the ten areas. Among the majors, only Mobil does not rank first in amount of participation in at least one area.

Three companies, classified as minors, participate in more joint ventures than BP, one of the majors. Indeed, BP's participation in joint ventures is the most limited among the majors. This company participates in each of the ten areas, but 67 percent of its joint ventures are in four areas: Australasia, Africa, the Middle East, and the North Sea. The other majors' participation is more evenly distributed among the ten areas. Royal Dutch Shell and Standard of New Jersey (Exxon) appear to participate in joint ventures on a more regular basis than the other participants.

As mentioned above, only Conoco, among the minors, is involved in

joint ventures in each of the ten areas. However, ARCO, Phillips, Union Oil Company of California, and Tenneco Incorporated, participate in nine areas and Standard Oil Company (Indiana), Sun Oil Company, and Marathon Oil Company are participants in eight areas. Three of these minors, Conoco, ARCO, and Phillips appear to participate in joint ventures on a more regular basis than BP.

Control

This section is devoted to examining the controlling participants in joint ventures. In addition to joint ventures, the control of joint activities, especially joint concessions, is examined. The primary groups studied are the international majors and the international minors.

Participation in joint ventures and joint activities, while important, is incomplete without an analysis of control. A group, or an individual participant, may hold a minority interest in several joint ventures and therefore enjoy a high participation rate. However, a controlling participant, in some cases, decides what activities will be undertaken. In other cases, the share of production is determined by the interest held by the participants. Controlling participation, therefore, is probably more important than mere participation.

International Majors

The seven international majors control more than half the number of joint activities in the ten areas. They control a larger percentage of each of the four activities than the other groups. The majors control over half of the joint exploration, and 47 percent of both the joint drilling activities and the joint discoveries. The majors control the

largest number of joint exploration activities in seven areas, joint drilling activities in eight areas, and joint discoveries in nine areas.

The majors control over half of the joint concessions in the ten areas. Examining only the number of concessions controlled by a group can be misleading, but by analyzing the data presented in Tables 6 and 7 some possible misconceptions may be avoided. For example, in the Middle East the majors are participants in 44 percent of the joint concessions. They are controlling participants in 37 percent of these concessions. However, as shown in Table 7, the majors control 312,000 square miles of concession area. This is about 60 percent of the joint concession area held (on and offshore) in the Middle East.

Alaska is another area where a misconception involving concessions may arise. The majors control three-fourths of the joint concessions in Alaska. However, they control 2,200 square miles, or about 16 percent of the concession area in Alaska. In southern Alaska the concessions are larger than on the North Slope. The minors control most of the concessions in southern Alaska, while the majors control most of the concessions on the North Slope. The more recent and larger oil discoveries have occurred on the North Slope.[40]

The majors control 1,404,000 square miles of joint concessions in the ten areas, which represents two-fifths of the concession area in the ten areas. However, as stated above, they control over half the number of joint concessions.

The international majors control more joint ventures than the

---

[40]See the Appendix, Table A3, pp. 233-243.

TABLE 6

CONTROL OF JOINT VENTURES AND JOINT ACTIVITIES BY THE INTERNATIONAL MAJORS AND MINORS, BY GEOGRAPHIC AREA, 1957-1971

	Joint Ventures				Joint Activities							
					Exploration				Concession			
	Major	Percent of Total[a]	Minor	Percent of Total	Major	Percent of Total	Minor	Percent of Total	Major	Percent of Total	Minor	Percent of Total
Africa	29	28	39	38	12	22	11	29	29	30	34	35
Alaska	18	64	9	32	3	75	1	25	501	74	176	26
Asia-Pacific	18	37	18	37	5	56	2	22	19	38	13	26
Australasia	23	59	9	23	13	76	3	18	7	32	10	45
Canada	20	55	15	41	4	57	3	43	16	53	11	37
Central America	14	41	7	21	3	43	2	29	12	40	6	20
Middle East	19	43	11	25	0	0	1	33	15	37	10	24
North Sea	18	35	23	45	9	64	4	29	193	37	201	38
South America	23	45	25	49	6	67	3	33	19	40	26	54
Western Europe	12	80	2	13	0	0	0	0	12	80	2	13
Total	194	43	158	35	55	50	30	28	823	54	498	32

(continued)

TABLE 6 (Continued)

	Joint Activities							
	Discovery				Drilling			
	Major	Percent of Total	Minor	Percent of Total	Major	Percent of Total	Minor	Percent of Total
Africa	16	31	22	42	13	36	12	33
Alaska	17	63	10	37	11	58	8	42
Asia-Pacific	4	25	1	6	2	29	0	0
Australasia	23	56	13	32	12	52	7	30
Canada	23	62	12	32	15	63	9	37
Central America	10	45	4	18	2	40	2	40
Middle East	8	38	4	19	4	31	3	23
North Sea	12	38	11	34	4	27	8	53
South America	16	44	19	52	11	52	10	48
Western Europe	10	83	1	8	4	100	0	0
Total	139	47	97	33	78	47	59	35

Source: Compiled from data in the Appendix, Tables A2 through A-11.

[a]In the ten areas 78 percent of the number of joint ventures is controlled by the majors and minors. The remaining 22 percent is controlled by miscellaneous other groups. Percentages of each joint activity are shown in the table for the majors and minors. The remaining percentages are controlled by miscellaneous other groups.

other groups. They control 194, almost half, of the joint ventures in the ten areas. The majors control all but thirty of the joint ventures in which they participate.

The majors control 119 joint ventures in which more than one major is involved. An example of one of these ventures is the Central Foothills Agreement Groups, a joint venture in Canada. In this venture, three majors, Gulf, Mobil, and BP, collectively control 69.3 percent interest; one minor, Sun, controls 25 percent interest; and "others" control 5.7 percent interest.

The Central Foothills venture is complicated because the ownership interests of the principals is held through subsidiaries. Gulf's 36.8 percent interest is held through two subsidiaries: one, a wholly owned subsidiary, holds 30 percent interest; the other, (Royalite Oil Company) holds 10 percent. However, Gulf owns only 68 percent of Royalite. BP has a 12.5 percent interest in the venture. BP's share is held through Triad Petroleum Development, Ltd. Triad has 20 percent interest in the venture, but BP owns only 62.6 percent of Triad. Mobil, through a wholly owned subsidiary has a 20 percent interest, and Sun, also through a wholly owned subsidiary, has a 25 percent interest in the venture.[41]

The above example is appropriate since three is the average number of majors involved in the joint ventures they control. It is also an interesting venture in that Gulf has two participating subsidiaries.

The joint ventures, similar to the above example, represent about two-fifths of the joint ventures that the majors control and about one-

---

[41]See the Appendix, Table A6, Venture Number 4, pp. 278-279.

TABLE 7

JOINT VENTURE CONCESSIONS BY AREA AND PARTICIPANT CONTROL,[a] 1957-1971

Area	Majors Sq. Miles (000)	Percent of Total	Minors[b] Sq. Miles (000)	Percent of Total	Others[c] Sq. Miles (000)	Percent of Total
Africa	129.3	18	316.0	43	288.5	39
Alaska	2.2	16	11.9	84	--d	--e
Asia-Pacific	227.4	24	363.8	39	352.9	37
Australasia	560.2	64	290.3	33	23.5	3
Canada	53.3	47	60.5	53	--d	--e
Central America	26.9	32	18.2	21	40.6	47
Middle East	311.8	57	159.1	29	76.9	14
North Sea	--f	--	--f	--	--f	--
South America	28.5	26	74.2	69	5.8	5
Western Europe	64.3	66	32.9	34	--d	--e
Total	1,404.3	40	1,326.9	38	788.5	22

Source: Compiled from data in the Appendix, Tables A2 through A-11.

[a]Control is defined as 50 percent or more.

[b]Includes concessions owned 50 percent if a major does not control the other 50 percent.

[c]Includes, local private capital, local governments, non-host governments, and "others".

[d]Less than 500 square miles.

[e]Less than one percent.

[f]Not available in square miles.

fourth of the ventures in the ten areas.

The majors control seventy-five joint ventures in which only one major participates. An example of this type of joint venture is the one between Shell Korea N.V., a subsidiary of Royal Dutch Shell, and the South Korean government. This venture, involving a 29,600 square mile concession off the shore of South Korea, is 80 percent owned by Shell and 20 percent owned by the South Korean government.[42]

The joint ventures, similar to the above example, represent slightly less than two-fifths of the ventures which the majors control, and nearly one-fifth of the ventures in the ten areas.

In six areas the majors control more joint ventures than the other groups, and in one area the majors and minors control the same number of ventures. The six areas controlled by the majors are: Western Europe, Alaska, Australasia, Canada, Central America, and the Middle East. In the Asia-Pacific area the majors and minors each control 37 percent of the joint ventures. The majors control the least amount of joint ventures in Africa. However, it should be noted that the majors control 47 percent of the joint ventures in Libya, the largest producing country in Africa in 1971.[43]

International Minors

The international minors control about one-third of the number of joint activities in the ten areas. They control the second largest percentage of each of the four joint activities. Twenty-eight percent

---

[42]See the Appendix, Table A4, Venture Number 7, p. 245.

[43]The Oil and Gas Journal, December 27, 1971, p. 73.

TABLE 8

JOINT VENTURE CONTROL, BY GROUP PARTICIPANT AND AREA, 1957-1971

Area	Joint Ventures Controlled by Two or More Majors	Joint Ventures, One Major and Others Involved — Control			Joint Ventures Controlled by Two or More Minors	Joint Ventures, One Minor and Others Involved — Control		Joint Ventures Controlled by Others
		Major	Minors	Others		Minor	Others	
Africa	14	15	3	4	11	21	19	15
Alaska	13	5	3	0	6	0	1	0
Asia-Pacific	6	12	1	3	6	8	5	8
Australasia	17	6	1	0	8	0	1	6
Canada	10	10	2	1	12	0	1	0
Central America	7	7	2	0	3	2	5	8
Middle East	13	6	1	1	4	6	6	7
North Sea	13	5	1	3	14	4	8	3
South America	15	8	6	2	12	5	2	1
Western Europe	11	1	0	1	1	1	0	0
Total	119	75	20	15	77	47	48	48

Source: Compiled from data in the Appendix, Tables A2 through A-11.

of the joint exploration, and about one-third of both the joint drilling, and the joint discoveries is controlled by the minors.

The minors also control about one-third of the joint concessions in the ten areas. They control the largest percentage of the concessions in four areas: Africa, Australasia, the North Sea, and South America.

Once again, examining only the number of concessions controlled by a group can be misleading. While the minors control the largest percentage of joint concessions in four areas, they control the largest percentage of the joint concession area in five areas. These five areas are: Africa, Alaska, the Asia-Pacific area, Canada, and South America. Only in Africa and South America do the minors control both the largest percentage of the joint concessions and the joint concession area.

It is difficult to ascertain which group controls the largest concession area in the North Sea. The German and Danish areas are controlled by the majors; however, the size of these two is not known to the author. In the other divisions of the North Sea, the British, Norwegian, and Netherlands, the block sizes vary and are not known to the author. It might be estimated that the majors control more area in the Netherlands area and perhaps the British areas, while the minors control more area in the Norwegian area.

In the Asia-Pacific area the minors control 37 percent of the concessions, (the same as the majors) but 39 percent of the concession area. Several of the minors' concessions are located in the offshore area surrounding Indonesia and in the South China Sea. Several of the majors' joint concessions in this area are in the offshore area near South Korea and Japan. It has been estimated that ". . . potentially

one of the most prolific oil reserves in the world was found in the East China and Yellow Seas, near Japan, Taiwan, and South Korea."[44] The situation in this area may turn out to be similar to that in southern and northern Alaska.

The minors control 144 joint ventures. This is about one-third of the number of joint ventures in the ten areas. They control slightly more than half of the joint ventures in which they participate.

Seventy-seven of the joint ventures that the minors control have no majors involved, but have more than one minor participating. An example of one of these ventures is in Columbia, South America. Three minors and a government company each have a 25 percent interest in the venture. The three minors, ARCO, Standard of Indiana, and Cities Service Company, each participate through one of their subsidiaries. Since each company holds a 25 percent interest, their collective interest is 75 percent, thus giving them control of the venture. Colombia's government company, Empresa Colombiana de Petroleos (COPETROL), holds the remaining 25 percent interest.[45]

The joint ventures, similar to the above example, represent about one-half of the joint ventures controlled by the minors, and nearly one-fourth of the joint ventures in the ten areas.

The minors control forty-seven joint ventures in which only one minor and "miscellaneous" participate. ("Miscellaneous" refers to parti-

---

[44]W.N. Peach and James A. Constantin, Zimmermann's World Resources and Industries (3rd ed.; New York: Harper and Row, Publishers, 1972), p. 393.

[45]See the Appendix, Table A10, Venture Number 14, pp. 344-345.

cipants other than minors and majors.) An example of this type of joint venture is in the Asia-Pacific area. In this venture, a subsidiary of Union Oil Company of California holds an 80 percent interest in a joint venture with Southeast Asia Petroleum Exploration Company (SAPEC). SAPEC holds the remaining 20 percent interest. SAPEC is owned in equal shares by Nippon Mining Company, Daikyo Oil Company, Ltd., and Maruzen Oil Company. Maruzen is in turn owned 67 percent by private Japanese interests and 33 percent by Union. Nippon and Daikyo are owned by Japanese interests.[46]

The joint ventures, similar to the above example, represent one-third of the ventures controlled by the minors, and slightly more than one-tenth of the ventures in the ten areas.

In the remaining twenty ventures controlled by the minors, a major is involved. Oasis Oil Company of Libya is an example of this type of joint venture. Two minors, Marathon Oil Company and Continental Oil Company, each hold a 33.3 percent interest in Oasis. In addition, Amerada-Hess Corporation, a minor, and Royal Dutch Shell, a major, each hold a 16.7 percent interest in Oasis. The combined interest of the three minors is 83.3 percent which gives them control of the venture.[47] The joint ventures, similar to the above example, represent 14 percent of the ventures controlled by the minors, and less than five percent of the ventures in the ten areas.

The minors control a larger percentage of joint ventures than the

---

[46]See the Appendix, Table A4, Venture Number 17, p. 248.

[47]See the Appendix, Table A2, Venture Number 51, p. 215.

other groups in three areas. These areas are: Africa, the North Sea, and South America. As has been mentioned above, the majors and minors each control 37 percent of the joint ventures in the Asia-Pacific area. The minors control one joint venture in Western Europe, which is their least amount of control.

"Miscellaneous"

The group "miscellaneous" control about one-fifth of the number of joint activities in the ten areas. They control 14 percent of the concessions, but slightly over 20 percent of the concession area.

"Miscellaneous" control one-fourth of the number of joint ventures in the ten areas. The distribution of these ventures is concentrated in four areas. These areas are: Africa, the Asia-Pacific area, the North Sea, and the Middle East. These four areas collectively account for about two-thirds of the joint ventures controlled by the group "miscellaneous".

Summary

The data presented in this chapter indicate that a significant magnitude of both joint ventures and joint activities exist in the ten areas. Each area has experienced an increase in the number of joint ventures over the fifteen year period for which data were collected. Africa has more joint ventures than the other areas and Western Europe has fewer than the other areas.

Participation in and control of both joint activities and joint ventures is dominated by two groups: the majors and the minors. These two groups rank first and second in the amount of participation in joint

activities in six areas. In the other four areas, one of the two groups ranks first. The minors participate in more joint ventures and joint activities than the other groups.

The control of joint activities and joint ventures is also dominated by the majors and the minors. Collectively, these two groups control a majority of both the joint activities and the joint ventures in each of the ten areas. The majors control the largest number of joint ventures in five areas and the largest number of joint activities in seven areas. The minors control the largest number of both joint ventures and joint activities in three areas. In the other areas, the majors and minors control the same number of joint ventures.

The majors control over one-half of the joint activities and one-half of the joint ventures. They dominate the control of joint ventures in the ten areas. The minors control about one-third of both the joint activities and the joint ventures in the ten areas. The majors and minors together control nearly seven-eights of the joint activities and three-fourths of the joint ventures in the ten areas.

CHAPTER IV

JOINT VENTURE PARTICIPATION PATTERNS

Various patterns of participation emerge from the joint venture data in the Appendix. In this chapter, six of the more prominent patterns of joint venture participation are examined. First, a general view of joint venture partners is outlined by arranging and examining groups of participants (those discussed in Chapter III) in several combinations.

Second, the participation patterns among the international majors, and the magnitude of the joint venture interlocks among the majors and other groups (excluding the minors), is examined.

Third, the participation patterns among the international minors, and the magnitude of joint venture interlocks among the minors and other groups (excluding the majors), is analyzed.

A fourth pattern is participation between the majors and minors, when they are involved in the same ventures.

Fifth, since the data reflect several groups of companies which are consistent partners, selected examples (primarily involving the majors and minors) of these partnerships are examined.

The sixth pattern is the evolution of selected joint ventures from their inception to either their dissolution or present status.

In order to obtain a general view of joint venture partners, the ventures are separated into activities and groups. Six participant groups are delineated: majors, minors, local private capital, local governments, non-host governments, and "others". Twelve different partnership arrangements are categorized. Each of the twelve categories has either a major or a minor involved. Seven categories have at least one major and seven categories have at least one minor involved.

The twelve categories account for nine-tenths of the control of exploration, discoveries, and drilling activities in the ten areas, and about 95 percent of the control of the concession activities in the ten areas. The seven categories with a major involved account for over one-half of the joint exploration, joint concessions, and joint drilling, and one-third of the joint discoveries. The seven categories with a minor involved account for the joint activities as follows: exploration, 57 percent; concessions, 70 percent; drilling, 55 percent; and discoveries, 52 percent.

Two categories involving both majors and minors overlap; hence, the percentage in some instances exceed 100 percent. If the two categories involving majors and minors are deleted, five categories involving only minors, or minors and the other groups, remain. These five account for about one-third of the joint exploration, joint concessions, and joint drilling, and about 30 percent of the joint discoveries.

International Majors

This section is devoted to an analysis of participation patterns involving the seven international majors. The first part focuses upon

TABLE 9

JOINT VENTURES BY TYPE OF PARTICIPANT AND BY TYPE OF ACTIVITY, TEN AREAS, 1957-1971

Participant	Kind of Activity: Exploration Number	Exploration Percent of Total	Concession Number	Concession Percent of Total	Drilling Number	Drilling Percent of Total	Discovery Number	Discovery Percent of Total
Major/Major(s)	12	10.3	273	17.8	32	11.0	20	12.3
Major(s)/Minor(s)	16	13.8	504	32.9	48	16.3	32	19.6
Major(s)/Minor(s) and Local Private Cap.	2	1.7	7	.5	7	2.4	7	4.3
Major(s)/Local Private Capital	14	12.0	22	1.4	26	9.0	13	8.0
Major(s)/Local Governments[a]	3	2.7	34	2.2	9	3.0	3	1.8
Major(s)/Non-host Government	9	7.8	35	2.3	8	2.6	7	4.3
Major(s)/Others	7	6.0	28	1.8	23	7.7	14	8.6
Minor/Minor(s)	10	8.7	177	11.5	22	7.5	6	3.7
Minor(s)/Local Private Capital	3	2.7	12	.8	5	1.6	2	1.2
Minor(s)/Local Government[a]	10	8.7	117	7.6	27	9.2	16	9.8
Minor(s)/Non-host Government	9	7.8	110	7.2	11	3.7	6	3.7
Minor(s)/Others	9	7.8	153	10.0	40	13.5	18	11.0

Source: Compiled from data in the Appendix, Tables A2 through A-11.

[a]Includes Joint ventures with both government companies and local governments.

joint venture patterns involving only the majors. In this examination the types of joint ventures, joint subsidiaries, and contractual agreements, are discussed. The number of majors participating in individual joint ventures in the ten areas is also discussed. Further, the number and patterns of interlocking ownership arrangements among the majors are examined.

The second part examines the participation patterns between the majors and local private capital, local governments, and non-host governments. This examination focuses upon the interaction patterns between the majors and the other participating groups (excluding the minors) in the ten areas. It also includes a discussion of interlocking ownership arrangements between the majors and the above mentioned groups.

There are sixty-four joint ventures in which the only participants are majors. Of these, thirty-four are joint subsidiaries and thirty are contractual agreements. Fifty-three percent of their joint ventures are joint subsidiaries and 47 percent are contractual agreements.[1]

Some typical examples of joint subsidiaries and contractual agreements among the majors are presented in Tables 10 and 11. The four examples in Table 10 are restricted to two majors. Three of the examples are joint subsidiaries, the other is a contractual agreement.

Venture 4 in Table 10, Colombia Petroleum Company, is a joint subsidiary owned, in equal shares, by Mobil Oil Corporation and Texaco Incorporated. This venture is typical of the two-company joint subsidiaries owned by the majors. If only two majors participate in a joint venture (either a joint subsidiary or a contractual agreement), they

---

[1]See the Appendix, Tables A2 through A-11, pp. 199-364.

TABLE 10

ILLUSTRATIVE JOINT VENTURES INVOLVING TWO INTERNATIONAL MAJORS, 1957-1971

Venture Number	Participants	Geographic Area
1	SHELL-BP PETROLEUM DEVELOPMENT COMPANY OF NIGERIA, LTD. Royal Dutch/Shell Group (50) British Petroleum Co., Ltd. (50)	Nigeria-Africa
2	KUWAIT OIL COMPANY, LTD. (KOC) British Petroleum Co., Ltd. (50) Gulf Oil Corp. (50)	Kuwait-Middle East
3	MOBIL OIL CORP., NORTH AMERICAN DIVISION (50) Mobil Oil Corp. STANDARD OIL COMPANY OF CALIFORNIA, WESTERN OPERATIONS, INC. (50) Standard Oil Company of California	Alaska-North Slope
4	COLOMBIAN PETROLEUM CO. Texaco, Inc. (50) Mobil Oil Corp. (50)	Colombia-South America

Source: Appendix; Table A2, Venture Number 79, p. 224, Table A3, Venture Number 20, p. 241, Table A8, Venture Number 6, p. 302, and Table A10, Venture Number 12, p. 344.

usually own it equally. Shares in the Colombia Petroleum Company are owned directly by the two principals. A variation of the two-major joint subsidiary is two companies owning their shares via subsidiaries. Actually there is little difference between the two types of joint subsidiaries since, in both cases, the ownership is vested in the principals. Both of these ownership patterns are used by the other majors.

The principals in each of the ventures in Table 10 follow similar participation patterns in other areas. For example, in Venezuela, Texaco and Mobil hold a joint concession via a contractual agreement,[2] and Gulf and BP (joint owners of Kuwait Oil Company) participate in six joint concession blocks in Alaska.[3] Joint ventures with two majors as the sole participants are typical in each of the ten areas.

The four ventures in Table 11 are illustrative of joint ventures involving either three or four majors. Two of these ventures are joint subsidiaries and two are contractual agreements.

Venture 3 in Table 11 is a contractual agreement among Mene Grande Oil Company, a subsidiary of Gulf Oil Corporation; International Petroleum Company (Venezuela), a subsidiary of Standard Oil Company (New Jersey) (Exxon); and Compania Shell of Venezuela Limited, a member of the Royal Dutch/Shell Group. Gulf has a 50 percent ownership interest in this venture, while Standard and Shell each have a 25 percent interest. However, under the terms of the agreement between Standard and Shell, Shell relinquishes final decisions in policy determination to

---

[2]See the Appendix, Table A10, Venture Number 50, p. 358.

[3]See the Appendix, Table A3, Venture Number 18, p. 240.

TABLE 11

ILLUSTRATIVE JOINT VENTURES INVOLVING THREE OR FOUR INTERNATIONAL MAJORS, 1957-1971

Venture Number	Participants	Geographic Area
1	ARABIAN AMERICAN OIL COMPANY (ARAMCO) Standard Oil Company of California (30) Texaco, Inc. (30) Standard Oil Company (New Jersey) (30) Mobil Oil Corp. (10)	Saudi Arabia-Middle East
2	MENE GRANDE OIL CO. (50) Gulf Oil Corp. INTERNATIONAL PETROLEUM COMPANY (VENEZUELA) (25) Standard Oil Company (New Jersey) COMPANIA SHELL OF VENEZUELA, LTD. (25) Royal Dutch/Shell Group	
3	OLDENBURG CONSORTIUM Gewerkschaften Brigitta (66.7) Esso A.G. (50) Standard Oil Company (New Jersey) Deutsche Shell A.G. (50) Royal Dutch/Shell Group Mobil Oil A.G. (33.3) Mobil Oil Corp.	West Germany-Europe
4	ROYAL DUTCH/SHELL GROUP (33.3) BRITISH PETROLEUM CO., LTD. (33.3) ESSO A.G. (33.3) Standard Oil Company (New Jersey)	British-North Sea Netherlands-North Sea

Source: Appendix; Table A8, Venture Number 12, p. 303, Table A10, Venture Number 38, p. 353, Table A-11 Venture Number 13, pp. 363-364. and Table A9, Venture Number 3, p. 314.

Standard. In effect, while Shell receives 25 percent of realized production, it has a restricted voice in policy determination.[4] This agreement gives Standard an effective 50 percent control of policy decisions and 25 percent of realized production.

Unequal ownership is typical in joint ventures involving more than two majors. Venture 1 in Table 11, Arabian American Oil Company (ARAMCO), is another illustration of unequal ownership among the participants. No rigid ownership pattern exists in ventures of this type. While many ventures involving either three or four majors are unequally owned, in others the participants have equal shares. Ventures 3 and 4 in Table 11 are examples of equal ownership among the participants.

Although the participants vary from area to area and venture to venture, arrangements involving two, three, and four majors are typical. Ventures involving two or three majors are found in each of the ten areas, while those involving exactly four majors are found in six areas.

Usually four or fewer majors participate in joint ventures. The data in Table 12 indicate that the average number of majors in a joint venture varies from area to area. For example, in the Middle East when majors are involved, an average of four participate in each venture, while in Africa the average is two. The ten-area average is three majors per joint venture.

Exceptions to these averages exist. The majors are involved in several exploration ventures involving ten or more participants. In these ventures, five, and in some instances, six majors participate. Another

---

[4] O'Connor, The Empire of Oil, op. cit., p. 263.

TABLE 12

AVERAGE NUMBER OF PARTICIPANTS IN JOINT VENTURES FOR THE INTERNATIONAL MAJORS AND INTERNATIONAL MINORS, TEN GEOGRAPHIC AREAS, 1957-1971

Area	Average Number of International Major Participants	Average Number of International Minor Participants
Africa	2	2
Alaska	3	3
Asia-Pacific	3	2
Australasia	3	2
Canada	3	3
Central America	2	3
Middle East	4	2
North Sea	3	3
South America	3	2
Western Europe	3	2
Ten Area Average	3	2

Source: Compiled from data in the Appendix, Tables A2 through A-11.

TABLE 13

PARTICIPANTS IN IRANIAN OIL EXPLORATION AND PRODUCING COMPANY, 1971

Participants	Geographic Area
IRANIAN OIL EXPLORATION AND PRODUCING COMPANY	Middle East
Iranian Oil Participants, Ltd.	(Iran)
British Petroleum Co., Ltd. (40 percent)	
Royal Dutch/Shell Group (14 percent)	
Gulf Oil Corporation (7 percent)	
Mobil Oil Corporation (7 percent)	
Standard Oil Company of California (7 percent)	
Standard Oil Company (New Jersey) (7 percent)	
Texaco, Inc. (7 percent)	
Compagnie Francaise des Petroles (6 percent)	
French government (35 percent)	
Others (65 percent)	
Iricon Agency, Ltd. (5 percent)	
American Independent Oil Co. (0.833 percent)	
R. J. Reynolds Industries Inc.	
Atlantic Richfield Co. (0.417 percent)	
Getty Oil Co. (0.417 percent)	
Tidewater Oil Co. (0.417 percent)	
Getty Oil Co.	
San Jacinto Petroleum Co. (0.417 percent)	
Continental Oil Co.	
The Signal Companies, Inc. (0.833 percent)	
Standard Oil Company (Ohio) (0.417 percent)	

Source: Data taken from the Appendix, Table A8, Venture Number 1, p. 299.

notable exception is in Iran. Seven majors participate in the Iranian Oil Exploration and Producing Company. This, however, is the only joint venture found in which all seven majors participate.

The majors have controlling interest in 106 joint ventures involving more than one major in the ten areas. In these ventures there are 490 direct interlocking ownership arrangements among the seven majors. It should be recalled that the ventures in the Appendix, from which these interlocks are calculated, are not exhaustive, i.e., more joint ventures between or among the majors exist. The number of interlocking ownerships is, however, representative of the relative magnitude of interlocks among the participants. Each major is interlocked with at least one of the other majors in each of the ten areas (except the Asia-Pacific area). The combined interlocks for the ten areas reveal that each major is interlocked with the other six majors a minimum of three times.

Royal Dutch Shell has 286 interlocking ownerships with the other six majors and Standard of New Jersey (Exxon) has 192 such interlocks. Shell accounts for 29 percent and Standard accounts for 20 percent of the interlocks among the majors in the ten areas. Collectively, these two companies account for almost one-half of the joint interlocks among the majors.

Shell and Standard share more joint interlocking ownerships than the other two-major combinations. The interlocks with Shell represent three-fourths of Standard of New Jersey's (Exxon) interlocks with the majors. Another 13 percent of Standard's interlocks with the majors is

with Mobil. Therefore, about 90 percent of Standard's interlocks with the majors are with Shell and Mobil.

One-half of Shell's interlocking ownerships with the majors are with Standard of New Jersey (Exxon), and slightly more than one-fourth are with Standard of California. Therefore, these two companies account for about three-fourths of Shell's interlocking ownerships with the majors.

Standard of California (SOCAL) has 183 interlocking ownerships (third largest among the majors) with the other six majors. This is about one-fifth of the interlocks among the majors.

SOCAL and Shell share the second largest number of interlocks between two majors. These interlocks are 44 percent of SOCAL's interlocking ownerships with the majors.

There are sixty-five interlocking ownerships between Texaco and SOCAL. This is the third largest number of interlocks between two majors. These interlocks account for about one-third of SOCAL's interlocks with the majors and over one-half of Texaco's.

Out of twenty-one possible interlocking combinations between two majors, three combinations account for about 30 percent of the interlocking ownerships among the majors. These three are: (1) Standard of New Jersey (Exxon) and Shell, (2) Shell and SOCAL, and (3) SOCAL and Texaco.

Further explanation of the interlocking ownerships between and among the majors is tedious. The data on these interlocks can be briefly summarized. Texaco has 112 interlocks with the other majors; Mobil has

TABLE 14

JOINT INTERLOCKING OWNERSHIP ARRANGEMENTS AMONG THE INTERNATIONAL MAJORS IN WHICH THE MAJORS OWN CONTROLLING INTEREST, TEN GEOGRAPHIC AREAS, 1957-1971

Company / Company	Jersey	Shell	Texaco	Mobil	Gulf	SOCAL	BP	Total
Standard Oil (New Jersey)								
Royal Dutch Shell Group	143							143
Texaco	5	18						23
Mobil Oil	25	23	10					58
Gulf Oil	8	13	10	8				39
Standard of California	3	79	65	17	7			171
British Petroleum	8	10	4	11	11	12		56
Total	192	143	89	36	18	12		490

Source: Compiled from data in the Appendix, Tables A2 through A-11.

94; Gulf, 57; and BP, 56. Texaco and Mobil's interlocks account for about one-tenth of the interlocks among the majors, while Gulf and BP's interlocks account for about one-twentieth each.

Texaco and Shell have eighteen ownership interlocks with each other, while Mobil and Gulf each share ten interlocks with Texaco. Mobil has twenty-five interlocks with Standard of New Jersey (Exxon), and twenty-three with Shell. Gulf is interlocked with Shell thirteen times and with BP eleven times.

The above discussion encompasses only direct interlocks among the majors. If indirect interlocks are examined, the patterns become more complex. This complexity may be illustrated by a hypothetical example. If four separate direct connections between four two-major combinations exist, then there are twelve possible indirect connections. Figure 3 is an illustration of this example.

Since each of the majors has at least one direct connection with the other six, there are twenty-one possible direct connections. These direct connections give rise to approximately 13,650 indirect connections among the majors. In this way a maze of indirect ownership connections spreads throughout the majors. Furthermore, the least number of direct connections between any two majors is three, and the average number of direct connections between two majors is thirty-seven. The number of indirect connections in either case is enormous.[5] It is

---

[5]The indirect connections may be calculated by use of the following permutation expansion equation. This expansion prevents the duplication of indirect connections.

Let,

x = number of companies,

FIGURE 3

ILLUSTRATIVE EXAMPLE OF POSSIBLE INDIRECT INTERLOCKING CONNECTIONS RESULTING FROM FOUR DIRECT INTERLOCKING CONNECTIONS

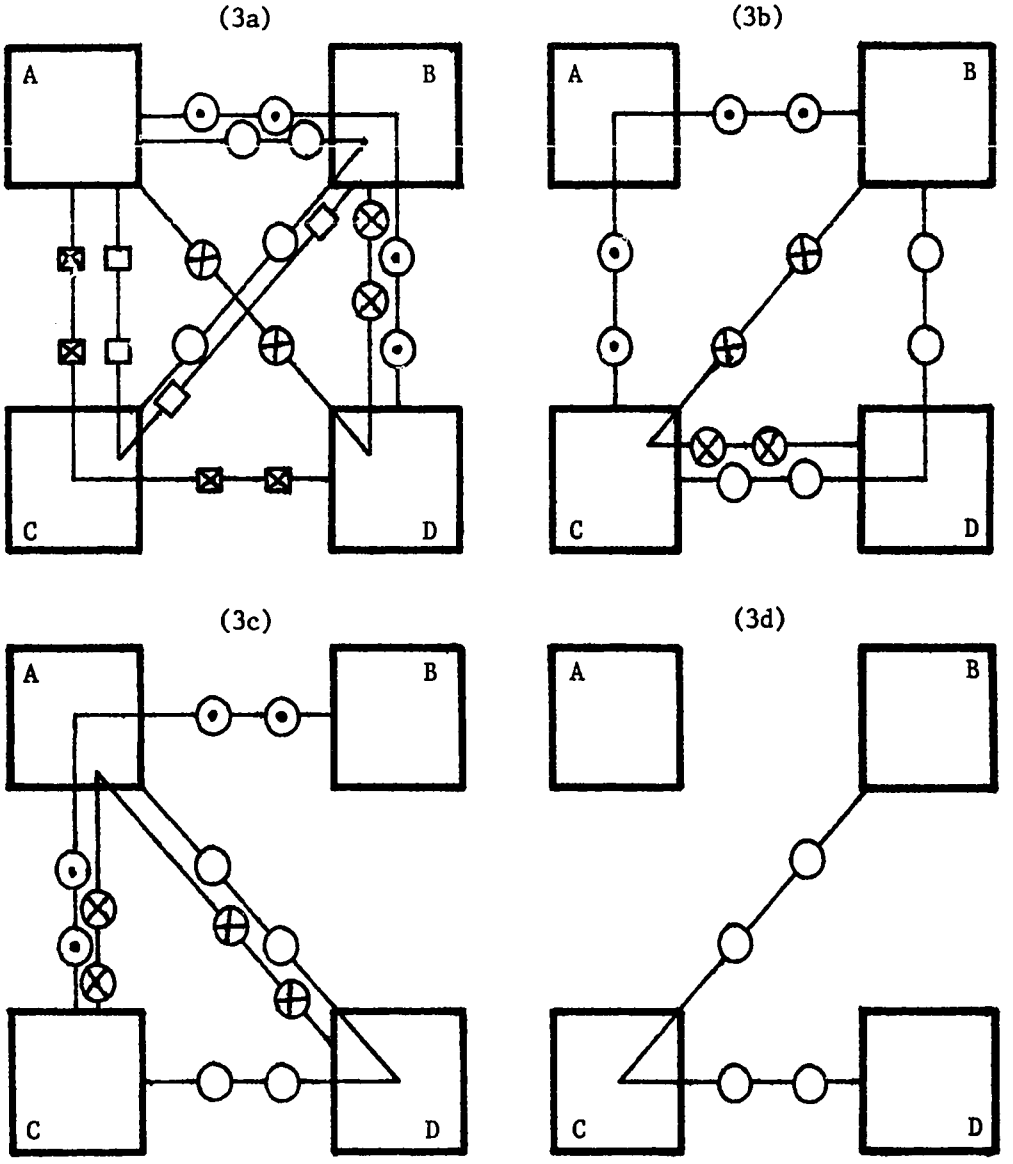

Permutations in 3a: ABC, ABD, ACB, ACD, ADB.

Permutations in 3b: BAC, BCD, BDC.

Permutations in 3c: CAB, CAD, CDA.

Permutations in 3d: DCB.

possible to surmise that the majors form a cohesive group with sufficient direct and indirect ownerships to allow communication to flow among the companies.

Majors and Local Private Capital

In Table 15 three examples of joint ventures between majors and LPC are presented. Venture 1 in Table 15 is between Australasian Petroleum Company Proprietary Limited (APC), and Esso Exploration and Production Incorporated. Esso is a subsidiary of Standard of New Jersey (Exxon), while APC is owned 80 percent by Oil Search Limited; 10 percent by BP Exploration Company Limited, a subsidiary of British Petroleum Company; and 10 percent by Mobil Oil Australia Limited, a subsidiary of Mobil Oil Corporation. Oil Search Limited is a local Australian company. This venture is a farmout agreement between APC and Standard of New Jersey (Exxon). The two companies are 50-50 participants. An interesting characteristic of this venture is that it involves both a joint subsidiary and a contractual agreement.

---

n = number of direct connections between any pair of companies,

$P_{x,i}$ = number of permutations of x things taken i at a time,

$$P_{x,i} = \frac{x!}{(x-i)!}$$

N = total number of indirect connections;

then, $N = \frac{1}{2} \sum_{i=3}^{x} n^{i-1} \frac{x!}{(x-i)!}$.

In particular, if $x = 7$, $n = 3$, then,

$$N = \frac{1}{2} \sum_{i=3}^{7} 3^{i-1} \frac{7!}{(7-i)!} = 2{,}563{,}785$$

or if, $x = 7$, $n = 37$, then, $N = \frac{1}{2} \sum_{i=3}^{7} 37^{i-1} \frac{7!}{(7-i)!} = 32 \cdot 10^{11}$.

Further participation patterns between the majors and LPC involve combinations of two and three majors in ventures with LPC. For example, Venture 2 in Table 15 is between two majors and LPC, while Venture 3 is between one major and LPC.

Venture 2 is a complex joint venture involving a series of joint subsidiaries owned by Standard of New Jersey (Exxon), Mobil, and private Japanese capital. The ownership of this joint venture is: Jersey, 45 percent; Mobil, 45 percent; and LPC, 10 percent. Venture 3 is less complex than Venture 2. It is a 50-50 contractual agreement between one major, Standard of New Jersey (Exxon), and a private Australian company.

When LPC and majors participate in a joint venture the majors usually hold controlling interest in the venture. The ventures in Table 15 are typical examples of the various combinations of ownership patterns exhibited in ventures between these two groups. Ventures involving LPC and the majors are common in seven areas: Australasia, the Asia-Pacific area, the North Sea, Central America, Western Europe, Canada, and South America.

Majors and Governments

Compared to ventures involving majors and LPC, those with either majors and local governments or majors and non-host governments are less frequent. The thirty-one joint ventures between majors and local governments are found in six of the ten areas. One example of a venture between a local government and a major is in the Asia-Pacific area. This venture is a contractual agreement between Pertamina, the Indonesian government company, and Texas Overseas Petroleum Company, a subsidiary of Texaco.

TABLE 15

ILLUSTRATIVE JOINT VENTURES BETWEEN THE INTERNATIONAL MAJORS AND LOCAL PRIVATE CAPITAL, 1957-1971

Venture Number	Participants	Geographic Area
1	AUSTRALASIAN PETROLEUM CO., PTY, LTD. (50) Oil Search, Ltd. (80) Australian private capital BP Exploration Co., Ltd. (10) British Petroleum Co., Ltd. (10) Mobil Oil Australia, Ltd. (10) Mobil Oil Corp. ESSO EXPLORATION & PRODUCTION, INC. (50) Standard Oil Company (New Jersey)	Papua
2	P. T. STANVAC INDONESIA (80) Esso Standard Eastern, Inc. (50) Standard Oil Company (New Jersey) Mobil Oil Corp. (50) TOA NENRYO KOGYO K. K. (10) Esso Standard Eastern, Inc. (25) Standard Oil Company (New Jersey) Mobil Oil Corp. (25) Japanese private capital (50) GENERAL SEKIYU SEISEI K. K. (5) Esso Standard Sekiyu K. K. (50) Standard Oil Company (New Jersey) General Sekiyu K. K. (50) Japanese private capital KYOKUTO PETROLEUM INDUSTRIES, LTD. (5) Mobil Oil Corp. (50) Mitsui & Co. (50) Japanese private capital	Sumatra

(continued)

TABLE 15 (Continued)

Venture Number	Participants	Geographic Area
3	ESSO EXPLORATION (AUSTRALIA), INC. (50) Standard Oil Company (New Jersey) HAEMATITE EXPLORATION PTY, LTD. (50) Broken Hill Proprietary, Ltd. Australian private capital	Victoria, Australia (offshore) New Zeland (offshore)

Source: Appendix; Table A5, Venture Numbers, 6, 10, and 25, pp. 262, 263, 271.

Pertamina has a 65 percent interest, and Texaco has a 35 percent interest in this Sumatraian joint concession.[6]

This venture is typical of those between majors and local governments. Three characteristics typical of ventures involving majors and local governments are exemplified by this venture: (1) it is a contractual agreement, (2) it has one participating major, and (3) it is controlled by the local government. When majors and local governments are joint venture participants, the local government usually is the controlling participant. This may be one explanation for the relatively small number of joint ventures between local governments and the majors.

Ventures between the majors and non-host governments (NHG) are less frequent than ventures between majors and local governments. There are nineteen ventures between NHG and the majors in the ten areas. However, this type of venture exists in only five areas. An example of this type of venture is an exploration joint venture off the shore of Greenland. Three majors, Chevron Oilfield Research Company, a subsidiary of Standard of California; Shell Oil Company of Canada Limited, a member of the Royal Dutch/Shell Group; Texaco Exploration Canada Limited, a subsidiary of Texaco; and AGIP S.P.A., a subsidiary of ENI, an Italian government company, participate in this venture. The ownership percentages in the venture are not known to the author, but since only one participant other than the majors is involved, it may be speculated that controlling interest is held by the majors.[7]

---

[6]See the Appendix, Table A4, Venture Number 5, p. 245.

[7]See the Appendix, Table A6, Venture Number 32, p. 288.

Since there are few ventures between majors and non-host governments, a participation pattern is not discernible.

The interlocking relationships among the majors and the three groups discussed above, reflect the rate of participation among the majors and these groups. The interlocks are shown in Table 16.

Local private capital is interlocked with the seven majors 162 times in the ten areas. Since LPC is involved in more joint ventures with the majors than either local or non-host governments, it has more interlocks than these two groups.

Local governments have 69 interlocking arrangements with the majors. Non-host governments have 56 interlocking arrangements with the majors.

Of the seven majors, Royal Dutch Shell has the most interlocks with these three groups. However, Standard of New Jersey (Exxon), Gulf, and BP each have nearly as many interlocks with these groups as Shell.

Each of the seven majors has a significant number of interlocks with LPC. BP has the most interlocks, 34, while Gulf and Mobil each have 16 interlocks (the least among the majors) with LPC.

Only two majors, Gulf and Shell, have a significant number of interlocks with local governments. While Gulf has the most interlocks with local governments, it has the least with non-host governments. Three majors, Standard of New Jersey, Shell, and BP each have several interlocks with non-host governments, while Texaco, Mobil, and Standard of California each have few interlocks with local or non-host governments.

TABLE 16

JOINT INTERLOCKING OWNERSHIP ARRANGEMENTS AMONG THE INTERNATIONAL MAJORS AND LOCAL PRIVATE CAPITAL, LOCAL GOVERNMENTS, AND NON-HOST GOVERNMENTS, TEN GEOGRAPHIC AREAS, 1957-1971

Majors	Local Private Capital	Local Governments	Non-host Governments	Total
Standard Oil (New Jersey)	26	7	17	50
Royal Dutch Shell Group	29	13	13	55
Texaco	22	5	5	32
Mobil Oil	16	6	6	28
Gulf Oil	16	30	2	48
Standard of California	19	2	2	23
British Petroleum	34	6	11	51
Total	162	69	56	287

Source: Compiled from data in the Appendix, Tables A2 through A-11.

International Minors

This section is devoted to an analysis of participation patterns involving the eighteen international minors. The first part focuses upon joint ventures involving only minors. In this examination two types of joint ventures, joint subsidiaries and contractual agreements, are discussed. The number of minors participating in individual joint ventures in the ten areas is also discussed. Further, the number and patterns of interlocking ownership arrangements among the minors are analyzed.

The second part of the analysis examines the participation patterns between minors and local private capital, local governments, and non-host governments. This examination includes the interaction patterns between the minors and the above named groups in the ten areas. It also includes a discussion of interlocking ownership arrangements between the minors and these groups.

There are thirty-eight joint ventures in which the only participants are minors. Of the thirty-eight, three are joint subsidiaries and thirty-five are contractual agreements.

Some typical examples of joint ventures among the minors are presented in Table 17. The five examples in this table include four contractual agreements and one joint subsidiary. Since the minors are involved in relatively few joint subsidiaries, only one example of this type of joint venture is described. The remaining examples are representative of the various ownership participation patterns in joint ventures involving minors.

Venture 1 in Table 17 is Coronado Petroleum Corporation. Coronado is a joint subsidiary of Continental Oil Company, Marathon Oil Company, and Amerada Petroleum Corporation, a subsidiary of Amerada-Hess Corporation. The three participants each own one-third of the venture. Coronado holds concessions in Tunisia and Australasia. As mentioned above, joint subsidiaries are not common among the minors; consequently, little may be discerned about the nature of this type of venture, nor can a pattern be presented.

Venture 2 in Table 17 is a contractual agreement between Continental Oil Company of Indonesia, a subsidiary of Continental Oil Company, and Union Oil Company of California. Continental has a 60 percent interest in the venture while Union has a 40 percent interest. A typical pattern prominent in six areas is two minors participating in a contractual joint venture with unequal ownership.

An example of equal ownership among three participants is shown in Venture 3 in Table 17. The venture is a contractual agreement. Three characteristics typical of ventures involving minors are: (1) three minors participate, (2) the minors equally share ownership, and (3) it is a contractual agreement.

Venture 4 in Table 17 also has three participants. However, in this venture the ownership interests are unequal. A pattern of unequal ownership is also typical of joint ventures involving the minors.

Venture 5 in Table 17 is a hybrid. It is a cross between a joint subsidiary and a contractual agreement. This venture involves four minors participating in a "group." The members in such ventures generally use

TABLE 17

ILLUSTRATIVE JOINT VENTURES BETWEEN THE INTERNATIONAL MINORS, 1957-1971

Venture Number	Participants	Geographic Area
1	CORONADO PETROLEUM CORP. (100) Continental Oil Co. (33.3) Amerada Petroleum Corp. (33.3) Amerada-Hess Corp. Marathon Oil Co. (33.3)	Tunisia
2	CONTINENTAL OIL COMPANY OF INDONESIA (60) Continental Oil Co. UNION OIL COMPANY OF INDONESIA (40) Union Oil Company of California	South China Sea
3	PAN AMERICAN INTERNATIONAL (33.3) Standard Oil Company (Indiana) PURE OIL CO. (33.3) Union Oil Company of California SUN OIL CO. (33.3)	Trinidad
4	TENNECO NIGERIA, INC. (50) Tenneco, Inc. SUNRAY NIGERIA, INC. (25) Sun Oil Co. SINCLAIR NIGERIAN OIL (25) Sinclair Oil Co. Atlantic Richfield Co.	Nigeria

(continued)

TABLE 17 (Continued)

Venture Number	Participants	Geographic Area
5	SIGNAL OIL AND GAS GROUP (100) Signal Oil and Gas Co., Ltd. (25) The Signal Companies, Inc. Marathon Petroleum North Sea (Breat Britain) Ltd. (25) Marathon Oil Co. Cities Service (U. K.), Ltd. (25) Cities Service Co. Richfield U. K. Petroleum, Ltd. (25) ARCO British, Ltd. Atlantic Richfield Co.	British North Sea

Source: See Appendix; Table A2, Venture Number 100, p. 230, Table A4, Venture Number 30, p. 251., Table A7, Venture Number 14, p. 293, Table A2, Venture Number 81, p. 225, and Table A9, Venture Number 40, p. 335.

the name of one of the companies in reference to the venture, e.g., the Phillips Group or the Gas Council/Amoco Group.[8] The ownership percentages in ventures of this type may be equal or unequal. If the venture has unequal ownership, the group is usually named after the member with the largest ownership interest. If, however, the participants have equal ownership interests, the group takes the name of the operating company.

The members of the group in Venture 5 use the name, "Signal Oil and Gas Group." This venture involves four minors. Each has a 25 percent interest in the venture. Ventures similar to this one are prevalent in five of the ten areas: the North Sea, Alaska, the Asia-Pacific Area, Australasia, and Canada.

The five examples in Table 17 are a cross-section of the types of joint ventures in which the minors participate. These examples represent a variety of participation patterns. The minors' participation patterns are more varied than the majors. For example, the minors' ownership patterns are more inconsistent than the majors. Both equal and unequal ownership occurs more often when minors participate, i.e., they do not have a single ownership pattern.

It is interesting that while there are eighteen minors and seven majors, the average number of minors participating in joint ventures in the ten areas is two. (As mentioned above, the average for the majors is three.) There is an average of two minors per joint venture in six areas, and an average of three minors per venture in four areas.

The minors have controlling interest in ninety-one joint ventures involving more than one minor. In these ventures there are 803 direct

interlocking ownership arrangements among the eighteen minors.

In terms of interlocking ownership arrangements, the minors are a less cohesive group than the majors. The combined interlocks for the ten areas reveal that no minor is interlocked with every other minor. Out of 153 possible direct interlocking combinations between two minors, 73 are not connected, 32 have one direct interlock, and 12 have two direct interlocks. There are 36 two-company combinations among the minors which have 3 or more direct interlocks.

Nine minors, Tenneco, Occidental, Ashland, Standard of Ohio, Getty, Signal, Marathon, Compagnie Francaise des Petroles (CFP), and Badische Anilin und Sodafabrik (BASF), collectively account for slightly more than one-tenth of the interlocks among the minors. Since these companies account for a relatively small percent of the interlocks they will be eliminated from the present discussion.

Standard of Indiana (SOI) has 321 interlocks with twelve minors. Atlantic Richfield (ARCO) has 316 interlocks with fourteen minors. ARCO and SOI each account for one-fifth of the interlocks among the minors. Sun Oil Company has 302 interlocking ownerships with fifteen other minors. SOI, ARCO, and Sun collectively account for about three-fifths of the interlocks among the minors.

Sun and ARCO share the largest number of interlocks between two minors. About one-half of both Sun and ARCO's interlocks with the minors are accounted for by these interlocks. SOI and ARCO share the second largest number of interlocks between two minors. These interlocks account for one-third of both SOI and ARCO's interlocks with the minors. SOI and

TABLE 18

JOINT INTERLOCKING OWNERSHIP ARRANGEMENTS AMONG THE INTERNATIONAL MINORS, TEN GEOGRAPHIC AREAS, 1957-1971

COMPANY / COMPANY	SOI	ARCO	Continental	Tenneco	Phillips	Occidental	Union	Sun	Cities	Ashland	SOHIO	Amerada	Getty	Signal	Marathon	CFP	BASF	Petrofina	Total
Standard of Indiana																			
Atlantic Richfield	105																		105
Continental	2	3																	5
Tenneco	0	1	2																3
Phillips	3	5	6	3															17
Occidental	2	0	0	0	0														2
Union	28	22	5	2	0	0													57
Sun	103	142	16	2	10	0	6												279
Cities Service	1	10	12	0	0	0	1	13											37
Ashland	0	1	0	0	1	0	0	1	1										4
Standard of Ohio	0	1	0	0	0	0	1	1	0	0									3
Amerada-Hess	70	0	3	0	0	0	2	2	1	1	0								79
Getty	1	4	1	0	1	0	1	1	0	0	1	18							28
Signal	3	7	0	1	0	3	1	1	12	0	0	1	0						29
Marathon	1	11	7	0	0	0	4	2	12	1	0	4	0	11					53
CFP	0	2	2	1	12	0	0	1	0	1	0	1	0	3	0				23
BASF	0	0	0	0	0	0	0	0	0	1	0	0	0	0	0	1			2
Petrofina	2	2	3	0	57	0	0	1	0	0	0	0	0	0	1	11	0		77
Total	321	211	57	9	81	3	16	23	26	4	1	24	0	14	1	12	0		803

Source: Compiled from data in the Appendix, Tables A2 through A-11.

Sun share the third largest number of interlocks between two minors. These interlocks represent about one-third of both SOI and Sun's interlocks with the other minors.

In summary, interlocks with SOI and ARCO represent over four-fifths of Sun's interlocks with the minors. Over three-fourths of ARCO's interlocks with the minors are with SOI and Sun, while about two-thirds of SOI's are with ARCO and Sun.

Collectively, Amerada-Hess, Phillips, and Petrofina account for 17 percent of the interlocking ownerships among the minors. Amerada has 103 interlocks with the other minors while Phillips has 98, and Petrofina has 77.

Amerada is interlocked with eight minors, but about two-thirds of its interlocks are with SOI, and slightly less than one-fifth are with Getty Oil Company. Phillips is interlocked with fourteen minors. Four-fifths of Phillips' interlocks are with three companies: 57 percent with Petrofina, 12 percent with CFP, and 10 percent with Sun. Although Petrofina is interlocked with ten minors, two, Phillips and CFP, account for almost nine-tenths of its interlocks.

Cities Service, Continental, and Union collectively account for 13 percent of the interlocking ownerships among the minors. Cities Service is interlocked with thirteen minors, but its interlocks are primarily distributed among five of them. Continental is interlocked with sixteen minors. Its interlocks are fairly evenly distributed among all sixteen. Continental is interlocked with all but one of the other minors. Union is also interlocked with sixteen minors. However, over four-fifths of its interlocks are with SOI, ARCO, Sun, and Continental.

It appears that the key minors in the interlocking ownership arrangements are SOI, ARCO, and Continental. SOI and ARCO have the largest number of interlocks with the minors, and Continental has the most even distribution of interlocks with the other minors.

As mentioned previously, the minors are not as cohesive a group (in terms of direct interlocking ownerships) as the majors. Since there are several two-company combinations which are not connected, it is difficult to calculate the number of possible indirect interlocking connections among the minors. However, if six of the above discussed minors are selected for analysis, indirect interlocks may be examined in a fashion similar to that applied to the majors.

At least one direct interlock exists between each of the fifteen two-company combinations of Standard of Indiana, ARCO, Continental, Union, Sun, and Cities Service. This means that there are approximately 1,200 possible three-company indirect interlocks among these six companies.[9]

Minors and Local Private Capital and Governments

Joint ventures among minors and non-host governments, local governments, and local private capital are also prominent patterns. Table 19 contains examples of joint ventures between minors and each of these groups.

Venture 1 in Table 19 is a typical example of a venture between one minor and a local government. This venture is between Amoco UAR Oil, a subsidiary of Amoco International Oil Company, which is in turn a sub-

---

[9]See footnote 5 in this chapter for the calculation procedures for these interlocks.

sidiary of Standard Oil Company (Indiana), and Egyptian General Petroleum Corporation, an Egyptian government company. The venture is a 50-50 contractual agreement between the two principals.

Both contractual agreements and joint subsidiaries are common in joint ventures between these two groups of participants. In the above venture the participants have equal ownership interests, however, ventures in which the ownership is unequally divided, usually in favor of the government company, are also typical. This latter pattern is especially common in Indonesia.[10]

A variation of Venture 1 is two or more minors participating in a joint venture with a local government. Venture 2 in Table 19 is an example of this variation. This variation is not as common as ventures similar to Number 1, but is found in five areas.

Venture 3 in Table 19 is an example of a joint venture between two minors and a non-host government. In this venture Phillips Petroleum Company of Indonesia, a subsidiary of Phillips Petroleum Company; Tenneco Indonesia Incorporated, a subsidiary of Tenneco; and AGIP-DIMI S.P.A. Indonesia, 84 percent owned by ENI, an Italian government company,[11] each has a one-third interest in a 77,224-square mile concession in the South China Sea.

Ventures similar to Number 3 are representative of the participation patterns between minors and non-host governments. Although the number of minors may vary from venture to venture, the ownership interests

---

[10]See the Appendix, Table A4, pp. 244-257.

[11]The remaining 16 percent interest is not known to the author.

are usually equally divided among (or between) the participants. Ventures between minors and non-host governments are common in nine areas.

Venture 4 in Table 19 is an example of a venture between minors and local private capital. This venture is between Union Oil Company of Netherlands, a subsidiary of Union Oil Company of California, and Stoomvaart M. Nederland. Stoomvaart is a consortium of private Netherlands interests. Union has a 80 percent interest in the venture, and Stoomvaart has a 20 percent interest. The two participants hold seven concession blocks in the Netherlands North Sea area.

Joint ventures in which the only two participants are minors and local private capital are not common. Usually a participant other than minors and LPC is involved. For example, in the North Sea, Phillips and Petrofina, two minors, have joint ventures with LPC, but ENI, a non-host government company, is usually involved.[12]

Collectively, the minors have 820 interlocking ownership arrangements with the three groups: local private capital,[13] local governments, and non-host governments. Twenty-nine percent of these interlocks are with local private capital, about 28 percent are with local governments, and 44 percent are with non-host governments.

Four minors, Phillips, Standard of Indiana, Badische Anilin und Sodafabrik (BASF), and Petrofina, account for three-fourths of the interlocks with local private capital. Phillips alone accounts for about

---

[12]See the Appendix, Table A9, Venture Number 33, pp. 329-330.

[13]The interlocks with this group include ventures in which participants other than minors and LPC are also involved.

TABLE 19

ILLUSTRATIVE JOINT VENTURES BETWEEN THE INTERNATIONAL MINORS AND LOCAL PRIVATE CAPITAL, LOCAL GOVERNMENTS, AND NON-HOST GOVERNMENTS, 1957-1971

Venture Number	Participants	Geographic Area
1	AMOCO UAR OIL CO. (50) Amoco International Oil Co. Standard Oil Company (Indiana) EGYPTIAN GENERAL PETROLEUM CORP. (50) Egyptian government co.	Egypt
2	LAVAN PETROLEUM CO. (LAPCO) (100) Arco Exploration Inc. (12.5) Atlantic Richfield Co. Murphy Middle East Oil Co. (12.5) Murphy Oil Corp. Iranian Sun Oil Co. (12.5) Sun Oil Co. Union Oil Company of Iran (12.5) Union Oil Company of California National Iranian Oil Co. (50) Iranian government co.	Iran (offshore)
3	PHILLIPS PETROLEUM COMPANY OF INDONESIA (33.3) Phillips Petroleum Co. TENNECO INDONESIA, INC. (33.3) Tenneco, Inc. AGIP-DIMI S.P.A. INDONESIA (33.3) Ente Nazionale Idrocarburi (84) Italian government co. Others (16)	South China Sea

(continued)

TABLE 19 (Continued)

Venture Number	Participants	Geographic Area
4	UNION OIL COMPANY OF NETHERLANDS (80) Union Oil Company of California STOOMVAART M. NEDERLAND (20) Netherlands private capital	Netherlands, North Sea

Source: Appendix; Table A8, Venture Number 24, p. 306, Table A8, Venture Number 38, p. 310, Table A4, Venture Number 45, p. 256, and Table A9, Venture Number 50, p. 339.

TABLE 20

JOINT INTERLOCKING OWNERSHIP ARRANGEMENTS BETWEEN THE INTERNATIONAL MINORS AND LOCAL PRIVATE CAPITAL, LOCAL GOVERNMENTS, AND NON-HOST GOVERNMENTS, TEN GEOGRAPHIC AREAS, 1957-1971

Minors	Local Private Capital	Local Governments	Non-host Governments	Total
Standard of Indiana	24	68	4	96
Atlantic Richfield	3	5	6	14
Continental Oil Co.	9	25	4	38
Tenneco	2	2	4	8
Phillips Petroleum Co.	78	6	102	186
Occidental Petroleum Corp.	0	3	1	4
Union of California	3	6	2	11
Sun Oil Co.	5	3	4	12
Cities Service Co.	0	1	13	14
Ashland Oil Co.	0	2	0	2
Standard of Ohio	0	0	1	1
Amerada-Hess	12	58	1	71
Getty Oil Co.	3	2	2	7
Signal Companies	8	0	0	8
Marathon Oil Co.	8	0	1	9
Compagnie Francaise des Petroles	5	45	141	191
Badische Anilin und Sodafabrik	22	1	3	26
Petrofina	54	0	68	122
Total	236	227	357	820

Source: Compiled from data in the Appendix, Tables A2 through A-11.

one-third of these interlocks. Four minors do not have interlocks with local private capital.

Of the 227 interlocks between local governments and minors, 196 are with four minors. Standard of Indiana, Amerada-Hess, Compagnie Francaise des Petroles (CFP), and Continental account for 86 percent of the minors' interlocks with local governments. Three minors do not have interlocks with local governments and five minors have less than three interlocks.

Three minors, CFP, Phillips, and Petrofina account for seven-eights of the interlocks between minors and non-host governments. Two minors do not have interlocks with non-host governments and six have less than three interlocks.

The minors have more interlocks with these three groups than do the majors. Also the minors' participation is more evenly distributed among the three, rather than concentrated in one group, as with the majors.

International Majors and Minors

This section is devoted to an examination of joint ventures between the international majors and the international minors. These two groups of participants are the most prominent members in joint ventures in the ten areas. Each group demonstrates particular participation patterns among its own members. However, participation also exists between the two groups.

Of the seventy-three joint ventures in which members of these two groups are the controlling participants, 15 percent are joint subsidiaries

and 85 percent are contractual agreements.

Ventures between majors and minors exhibit several interesting variations and combinations. Table 21 presents four examples of joint ventures representative of some of these variations and combinations.

Venture 1 in Table 21 is a 50-50 contractual agreement between Humble Oil and Refining Company, a subsidiary of Standard of New Jersey (Exxon), and Atlantic Richfield Company (ARCO). This venture is typical of those involving one major and one minor. Two characteristics are common in other similar ventures: (1) they are contractual agreement and (2) they are equally owned by the two participants. Ventures analogous to this one are typical in six of the ten areas.

Venture 2 in Table 21 is characteristic of joint ventures involving one major and more than one minor. This venture is a contractual agreement among Standard of California, ARCO, Union, and Marathon. Contractual agreements controlled by minors and involving one major are found in six of the ten areas.

Venture 3 in Table 21 is illustrative of one of the few joint subsidiaries in which both majors and minors participate. Paria Operations Incorporated is owned by one major, Texaco, and four minors, Continental, Marathon, Cities Service, and ARCO. Texaco, Continental, and Marathon each have a 25 percent interest in Paria, while Cities Service has a 16.67 percent interest and ARCO has a 8.13 percent interest.

Controlling interest in ventures of this nature is usually held by the minors and is usually unequally distributed among the participants. While ventures similar to Paria Operations are present in four of the ten areas, most of the joint subsidiaries in which both majors and minors

TABLE 21

ILLUSTRATIVE JOINT VENTURES BETWEEN THE INTERNATIONAL MAJORS AND THE INTERNATIONAL MINORS, 1957-1971

Venture Number	Participants	Geographic Area
1	HUMBLE OIL AND REFINING CO. (50) Standard Oil Company (New Jersey) ATLANTIC RICHFIELD COMPANY, ALASKA DISTRICT (50) Atlantic Richfield Co.	North Slope
2	ATLANTIC RICHFIELD CO. (44.75) STANDARD OIL COMPANY OF CALIFORNIA (44.75) UNION OIL COMPANY OF CALIFORNIA (5.25) MARATHON OIL CO. (5.25)	Swanson River, Alaska-North Slope
3	PARIA OPERATIONS, INC. (100) Texas Petroleum Co. (25) Texaco Inc. Continental Oil Company of Venezuela (25) Continental Oil Co. Marathon Petroleum Venezuela, Ltd. (25) Marathon Oil Co. Venezuela-Cities Service, Inc. (16.67) Cities Service Co. Sinclair Venezuelan Oil Co. (8.33) Atlantic Richfield Co.	Venezuela, Gulf of Paria

(continued)

TABLE 21 (Continued)

Venture Number	Participants	Geographic Area
4	ELWERATH OIL COMPANY OF LIBYA (50) Gewerkschaft Elwerath Deutsche Shell A.G. (50) Royal Dutch/Shell Group Esso A.G. (50) Standard Oil Company (New Jersey) BADISCHE ANILIN UND SODAFABRIK (50) Private German capital	Libya

Source: Appendix; Table A3, Venture Number 15, p. 240, Table A3, Venture Number 1, p. 233 Table A10, Venture Number 43, p. 356, Table A2, Venture Number 55, p. 216.

participate are in the Middle East.

Venture 4 in Table 21 is a contractual agreement between two majors and one minor. Elwerath Oil Company of Libya and Badische Anilin und Sodafabrik, a private German company, are 50-50 partners in this venture. Elwerath is a subsidiary of Gewerkschaft Elwerath. Gewerkschaft is a 50-50 joint subsidiary of the Royal Dutch/Shell Group, and Standard of New Jersey (Exxon). This venture, which involves a joint subsidiary owned by two majors participating in a contractual agreement with a minor, is typical in four of the ten areas.

Interlocking ownerships among the majors and minors as individual groups have been discussed previously. In Table 22 these interlocks are eliminated so that the number of interlocks between the two groups can more easily be seen. Only those interlocks between members of the two groups are presented in this table.

There are 934 direct joint interlocking ownership arrangements between the majors and the minors. These interlocks are compiled from the 238 joint ventures in which both majors and minors participate.

Among the minors, ARCO, Phillips, and Continental have the most interlocking ownerships with the majors. Collectively, these three account for 63 percent of the minors' interlocks with the majors. Collectively, Amerada-Hess, Occidental, Ashland, and Petrofina have 4 percent of the minors' interlocks with the majors. Thirteen of the minors are interlocked with each of the majors at least once.

ARCO has 393 interlocks with the seven majors; 215 of these are with Standard of New Jersey and 130 are with BP. These two account for

TABLE 22

JOINT INTERLOCKING OWNERSHIP ARRANGEMENTS BETWEEN THE INTERNATIONAL MAJORS AND THE INTERNATIONAL MINORS, TEN GEOGRAPHIC AREAS, 1957-1971

Minor \ Major	Jersey	Shell	Texaco	Mobil	Gulf	SOCAL	BP	Total
Standard of Indiana	7	6	8	3	4	4	1	33
Atlantic Richfield	215	9	12	7	7	13	130	393
Continental	5	7	8	4	21	8	4	57
Tenneco	3	1	3	3	1	1	1	13
Phillips	5	3	5	98	5	10	11	137
Occidental	1	1	2	1	1	2	1	9
Union	4	5	8	4	4	9	18	52
Sun	4	3	8	4	3	4	1	27
Cities Service	5	5	2	1	1	1	0	15
Ashland	2	2	2	1	2	2	2	13
Standard of Ohio	1	1	2	1	7	2	7	21
Amerada-Hess	0	1	0	0	0	0	0	1
Getty	6	4	6	4	8	6	5	39
Signal	6	3	3	4	4	3	5	28
Marathon	4	7	2	1	1	4	1	20
CFP	7	7	5	6	2	2	6	35
BASF	8	9	6	2	0	2	1	28
Petrofina	1	0	1	0	1	1	9	13
Total	284	74	83	144	72	74	203	934

Source: Compiled from data in the Appendix, Tables A2 through A-11.

nearly 90 percent of ARCO's interlocks with the majors. ARCO's remaining interlocks are fairly evenly distributed among the other majors.

Phillips has 137 interlocking ownerships with the majors; about three-fourths of these are with Mobil. The remaining 28 percent of Phillips' interlocks are spread evenly among five of the other majors.

Continental has fifty-seven interlocks with the majors. Thirty-seven percent of these are with Gulf; however, the remaining 63 percent are distributed evenly among the other six majors.

Among the majors, Standard of New Jersey (Exxon), BP, and Mobil have the largest number of interlocking ownerships with the minors. Collectively these three account for about two-thirds of the majors' interlocks with the minors. Each of the other four majors has about the same number of interlocks with the minors.

Standard of New Jersey (Exxon) has 284 interlocking ownerships with the minors; three-fourths of these are with ARCO. Standard is interlocked with each minor (except Amerada-Hess) at least once and with thirteen minors three or more times.

BP has 203 interlocking ownerships; 64 percent of these are with ARCO. BP is interlocked with sixteen minors one or more times and with nine minors three or more times.

Mobil has 144 interlocking ownerships with the minors; 68 percent of these are with Phillips. Mobil is interlocked with sixteen minors at least once and with nine minors three or more times.

The three largest two-company combinations among the majors and minors are: Standard of New Jersey and ARCO, BP and ARCO, and Mobil and

Phillips. Collectively, these three combinations account for about one-half of the interlocking ownerships between majors and minors.

Table 23 contains the numerical tabulation of the aggregate interlocking ownerships among and between the majors and the minors for the ten geographic areas. Table 24 contains the combined interlocks for the twenty-five company participants and the four groups: local private capital, local governments, non-host governments, and "others." These interlocks are broken down and analyzed by geographic area.

By analyzing the data in Tables 23 and 24 the magnitude of interlocking ownership arrangements for the individual participants may be observed.

The aggregate number of interlocking ownership arrangements among and between the majors and the minors is about 2,500. Nineteen of the twenty-five company participants have at least one interlock with each other; twelve have three or more mutual interlocks. If the number of indirect interlocks was calculated for either of the above cases, the number would be enormous.

The ten company participants with the largest number of interlocking ownerships are: ARCO, Standard of New Jersey (Exxon), Standard of Indiana, Phillips, Royal Dutch Shell, Sun, Compagnie Francaise des Petroles (CFP), Mobil, BP, and Standard of California. Of these ten, five are majors and five are minors. These ten collectively account for about 70 percent of the interlocks among the twenty-five company participants and nearly one-half of the interlocks among the six groups of participants. Five of these ten are examined in the following discussion.

Atlantic Richfield has 899 interlocking ownership arrangements with the other participants. This is about one-tenth of all the interlocks among the participants in the ten areas. Standard of New Jersey (Exxon) has 621 interlocking ownership arrangements with the other participants. This is about 6 percent of all the interlocks in the ten areas.

Both ARCO and Jersey are interlocked with twenty-three of the other twenty-four company participants. Neither ARCO nor Jersey is interlocked with Amerada-Hess. The twenty-three companies with whom ARCO and Jersey are interlocked account for about four-fifths of their interlocks.[14] Interlocks with Jersey account for about one-fourth of ARCO's interlocks, while two companies, Shell and ARCO, account for about three-fifths of Jersey's.

Seventy percent of ARCO's interlocks are in Alaska and 17 percent are in the North Sea. The remaining 13 percent are more evenly distributed among the other areas (except Western Europe). ARCO has more interlocks in Alaska than the other participants. Nearly three-fourths of Standard of New Jersey's interlocks are in Alaska and the North Sea. The remaining one-fourth is more evenly distributed among the other areas. Jersey has its fewest interlocks in Central America, and (along with Shell) has more than the other participants in Western Europe.

Standard of Indiana has 570 interlocking ownership arrangements with the other participants, or 5 percent of all the interlocks in the

---

[14]The remaining interlocks are with LPC, NHG, local governments, and "others."

ten areas. SOI is interlocked with twenty-two of the other twenty-four company participants. These twenty-two companies account for 67 percent of SOI's interlocks;[15] three companies, Sun, ARCO, and Amerada-Hess account for 50 percent. About 90 percent of SOI's interlocks are in Alaska and the North Sea. The remainder are found mainly in Canada, South America, and Africa. The company does not have interlocks in Australasia or Western Europe.

Phillips has 518 interlocks with the other participants, or 5 percent of all the interlocks in the ten areas. Phillips is interlocked with twenty-one of the other twenty-four company participants. These twenty-one account for 54 percent of Phillips' interlocks;[16] two companies, Mobil and Petrofina, account for 31 percent. Four-fifths of Phillips' interlocks are in Alaska and the North Sea. The remaining one-fourth are found mainly in South America and Canada. Phillips has no interlocks in Western Europe, but it has more interlocks in the North Sea than the other participants.

Royal Dutch/Shell Group has 492 interlocking ownership arrangements with the other participants. This is 5 percent of all the interlocks in the ten areas. Shell is interlocked with twenty-three of the other twenty-four company participants; these twenty-three account for four-fifths of Shell's interlocks.[17] Two companies, Standard of New Jersey (Exxon), and Standard of California, are interlocked with Shell

---

[15] Ibid.

[16] Ibid.

[17] Ibid.

TABLE 23

JOINT INTERLOCKING OWNERSHIP ARRANGEMENTS AMONG THE INTERNATIONAL MAJORS AND MINORS, TEN GEOGRAPHIC AREAS, 1957-1971

COMPANY / COMPANY	Jersey	Shell	Texaco	Mobil	Gulf	SOCAL	BP	SOI	ARCO	Continental	Tenneco	Phillips	Occidental	Union	Sun	Cities	Ashland	SOHIO	Amerada	Getty	Signal	Marathon	CFP	BASF	Petrofina	Total
Standard Oil, New Jersey																										0
Royal Dutch Shell	156																									156
Texaco	13	27																								40
Mobil	35	24	13																							72
Gulf	11	15	16	11																						53
Standard Oil, California	7	85	63	21	12																					198
British Petroleum	11	15	7	16	20	5																				74
Standard of Indiana	7	6	8	3	4	4	1																			33
Atlantic Richfield	215	9	12	7	7	13	130	108																		501
Continental	5	7	8	4	21	8	4	3	6																	66
Tenneco	3	1	3	3	1	1	1	1	2	3																19
Phillips	5	3	5	98	5	9	10	4	11	8	4															162
Occidental	1	1	2	1	1	2	1	3	1	1	1	1														16
Union	4	5	8	4	4	9	18	30	27	5	4	3	1													122
Sun	4	3	8	4	3	4	2	106	147	6	2	14	0	9												312
Cities Service	5	5	2	1	1	1	1	2	5	16	1	1	1	2	13											57
Ashland	2	2	2	1	2	2	2	3	3	2	1	4	1	2	2	2										33
Standard of Ohio	1	1	2	1	7	2	7	0	3	3	0	0	0	1	1	1	0									30
Amerada-Hess	0	1	0	0	0	0	0	70	0	3	1	0	0	0	0	0	4	0								79
Getty	6	4	6	4	8	6	5	7	11	6	2	5	2	5	3	2	3	3	18							106
Signal	6	3	3	4	3	5	2	4	10	2	2	1	5	5	1	17	1	1	1	4						80
Marathon	4	7	2	1	1	4	1	3	13	9	1	1	0	6	3	2	1	0	4	4	0					67
CFP	7	7	5	6	2	2	6	0	3	4	2	23	0	3	1	0	1	1	2	2	1	14				92
BASF	8	9	6	2	0	2	1	2	0	0	0	0	0	0	1	0	1	0	0	0	0	4	1			37
Petrofina	1	0	1	0	1	1	9	2	4	4	0	65	0	1	2	0	1	0	0	2	0	1	11	0		106
Total	517	240	182	192	103	80	201	348	246	72	21	118	10	34	27	24	12	5	25	12	1	19	12	0		2501

Source: Compiled from data in the Appendix, Tables A2 through A-11.

TABLE 24

JOINT INTERLOCKING OWNERSHIP ARRANGEMENTS BY PARTICIPANT AND GEOGRAPHIC AREA, 1957-1971

Participant	Geographic Area										
	Africa	Alaska	Asia-Pacific	Austral-asia	Canada	Central America	Middle East	North Sea	South America	Western Europe	Total
Jersey	13	249	19	13	23	3	42	205	40	14	621
Shell	34	116	12	35	13	15	50	163	40	14	492
Texaco	12	55	6	31	15	8	29	59	55	10	280
Mobil	19	140	22	23	14	11	39	20	39	9	336
Gulf	7	54	18	3	23	7	16	85	29	13	255
SOCAL	9	147	4	31	5	17	19	59	14	10	315
BP	11	181	6	36	13	1	35	58	7	2	350
SOI	14	263	7	0	23	2	3	237	21	0	570
ARCO	11	618	7	6	16	13	25	153	50	0	899
Continental	15	50	8	17	29	2	23	49	30	2	225
Tenneco	5	25	2	5	10	5	8	0	9	0	69
Phillips	11	141	6	10	27	4	9	271	39	0	518
Occidental	7	26	0	0	0	1	0	0	3	0	37
Union	12	118	8	11	4	7	16	8	35	0	219
Sun	7	239	0	21	14	3	17	132	40	0	473
Cities	12	47	3	0	0	0	5	31	11	0	109
Ashland	13	34	5	0	6	1	6	0	7	0	72
SOHIO	3	12	0	0	0	4	14	0	15	0	48
Amerada	12	36	0	2	4	1	0	211	2	0	268
Getty	5	82	12	0	18	0	32	0	3	0	152
Signal	5	24	0	0	0	5	18	34	13	0	99
Marathon	7	40	4	3	11	0	0	41	6	2	114
CFP	52	0	1	5	18	0	41	254	0	5	376
BASF	4	0	0	0	0	0	11	57	13	1	86
Petrofina	0	15	0	0	7	0	0	211	0	0	233
LPC	0	0	4	98	29	8	14	544	16	12	725
LG	60	0	34	10	3	1	45	343	22	9	527
NHG	123	2	6	9	17	1	22	520	14	0	714
Others	140	205	76	47	82	28	94	626	76	4	1,378
Total	623	2,919	270	416	424	148	633	4,371	649	107	10,560

Source: Compiled from data in the Appendix, Tables A2 through A-11.

241 times, which is about one-half of Shell's interlocks in the ten areas.

Over one-half of Shell's interlocks are in Alaska and the North Sea. Shell's interlocks in the other eight areas are more evenly distributed; however, Shell has more interlocks in the Middle East than the other participants.

Collectively, the five companies discussed above account for three-tenths of the interlocks in the ten areas. The next five largest companies (in terms of the number of interlocks) account for 17 percent.

An analysis of the preceding data reveals that about two-thirds of the joint interlocking ownerships in the ten areas are in Alaska and the North Sea. However, there are relatively large numbers of interlocks in South America (649), the Middle East (633), Africa (623), and Canada (424). Central America and Western Europe have the least number of interlocks.

The majors, except BP, appear to have more even distribution of interlocks in the ten areas than the other participants. BP's interlocking ownerships are concentrated in four areas: Alaska, Australasia, the Middle East, and the North Sea. Among the minors, Continental appears to have the most even distribution of interlocks among the ten areas.

Consistent Partnerships

In this section three forms of consistent partnership arrangements are examined: (1) partnerships between two or more majors, (2) partnerships between a major and a minor, and (3) partnerships between minors. Included in the latter is a partnership between a minor and a non-host government company. Of these three patterns, partnerships between majors

is the most frequent.

While there are several sets of consistent partnerships among the majors, three are outstanding: (1) Texaco and Standard of California, (2) Standard of New Jersey (Exxon) and Mobil, and (3) Standard of New Jersey and Royal Dutch Shell.

Since they participate in at least thirty-two joint ventures and have joint operations in nine of the ten areas, Texaco and SOCAL are probably the most significant joint venture partners. The two companies operate primarily through their 50-50 joint subsidiaries, California Texas Oil Company (Caltex) and American Overseas Petroleum Limited (Amoseas).

Caltex was formed in 1936 to act as operator for the two parents in the Eastern Hemisphere. Since that time Caltex has formed several subsidiaries of its own. Caltex originally managed the producing, refining, and marketing operations for SOCAL and Texaco. However, when Amoseas was organized it took over the principal administration of exploration and production from Caltex.

In 1968 Amoseas and Caltex were reorganized. Chevron Overseas Petroleum Incorporated (COP), a 100 percent subsidiary of Standard of California, and Texaco Overseas Petroleum Incorporated (TOP), a 100 percent subsidiary of Texaco, were established by the two Caltex parents. Each of the subsidiaries, COP and TOP, were to manage separate parts of the areas originally managed by Amoseas. However, the new organization did not affect the 50-50 ownership of producing assets or exploration interests in the Eastern Hemisphere. Furthermore, it did not alter the

ownership of Caltex Petroleum Corporation, a 50-50 subsidiary engaged in sizable amounts of refining, marketing, and other oil activities in the Eastern Hemisphere. The reorganization was primarily for managerial and administrative purposes and not ownership control.

In the Eastern Hemisphere there are few instances in which either Texaco or SOCAL operates autonomously. In addition to the Caltex-Amoseas complex, the two companies each have a 30 percent interest in the Arabian American Oil Company, a 7 percent interest each in the Iranian Participants, and hold interests in other Middle Eastern oil operations.

Texaco and SOCAL have several joint ventures outside the Eastern Hemisphere. The two participate in joint ventures in South America, Alaska, and Canada; in fact, Central America is the only area of the ten in which Texaco and Standard of California do not have joint operations of some type.

Most of the joint ventures in which these two comapnies participate are joint subsidiaires. Their contractual agreements are primarily in the Western Hemisphere.

The association between Standard of New Jersey (Exxon) and Shell dates at least to the Achnacarry agreements in 1928. In a meeting in Scotland these two, along with BP, divided world markets and arranged pricing agreements.

Standard of New Jersey and Royal Dutch Shell are partners in at least twenty-nine joint ventures. These two companies participate primarily through joint subsidiaries. Some of their more notable joint subsidiaries are Gewerkschaft Elwerath, Gewerkshaft Brigitta, N. V. Nederlandse

Aarodlie Maatschappij, and Shell United Kingdom Exploration and Production Limited. Each of these is a 50-50 subsidiary between Standard of New Jersey and Shell. In addition to their place of incorporation, these subsidiaries operate in six areas and have joint ventures with other participants.

In addition to joint subsidiaries, Shell and Standard of New Jersey (Exxon) participate in contractual agreements. One of the more notable contractual agreements between these two companies is in Venezuela. In this agreement (which also includes Gulf) the two companies equally share one-half of the concession rights and production of Mene Grande Oil Company, a Gulf subsidiary. Shell and Standard of New Jersey are usually 50-50 partners in either a joint subsidiary or a contractual agreement. These two companies jointly operate in eight areas (Asia-Pacific and Australiasia are the exceptions).

Standard of New Jersey (Exxon) and Mobil (using their present names) were two of the companies separated from the Standard Oil Trust in 1911. The association between the two was re-established in 1933 by the formation of Standard-Vacuum (Stanvac). Stanvac, a 50-50 joint subsidiary of Mobil and Standard of New Jersey, was organized to manage and administer the operations of its two parents in the Far East. Stanvac operated until 1961 when it was broken up as a result of a consent decree in an antitrust case. Apparently the separation was not complete since at least one joint subsidiary, P. T. Stanvac Indonesia, was still in operation in 1971.

Standard of New Jersey and Mobil are partners in at least nineteen

TABLE 25

ILLUSTRATIVE CONSISTENT PARTNERSHIPS IN JOINT VENTURES FOR SELECTED PARTICIPANTS, 1957-1971

Participants	Number of Ventures In Which Partners Participate	Number of Areas In Which Partners Participate
Texaco Standard Oil, California	32	9
Standard Oil, New Jersey Royal Dutch Shell	29	8
Standard Oil, New Jersey Mobil	19	7
Royal Dutch Shell British Petroleum	17	5
Standard Oil, New Jersey Standard Oil, Indiana	7	5
Standard Oil, New Jersey Atlantic Richfield	10	6
Gulf Continental	6	5
Continental Union	7	5
Standard Oil, Indiana Atlantic Richfield	7	5
Phillips Ente Nazionale Idrocarburi	18	5

Source: Compiled from data in the Appendix, Tables A2 through A-11.

joint ventures. One-half of these ventures are contractual; the other one-half are joint subsidiaries. The two companies have joint operations in seven of the ten geographic areas.

The associations between the other partners in Table 25 (except possibly shell and BP) are neither as long-standing nor as dominant as the three partnerships discussed above. Shell and BP are partners in at least nineteen joint ventures; however, they have partnerships in only five areas. Their more important joint ventures are in the Middle East, Africa, and Australasia.

Partnerships between majors and minors are not as common as partnerships between majors and are usually based on contractual agreements.

Three of the more important major-minor partnerships are Standard of New Jersey-Atlantic Richfield, Standard of New Jersey-Standard of Indiana, and Gulf-Continental.

Of these three, the Standard of New Jersey-ARCO partnership is the most outstanding. Both of the companies were part of the Standard Oil Trust.[18] These two companies participate in at least ten joint ventures and they have joint activities in six of the ten geographic areas.

Although partnerships between two minors are not as common as partnerships between a major and a minor, there are several sets of partnerships between two minors. In addition to the two minor-minor partnerships contained in Table 25, Union and Marathon, and Continental and

---

[18]ARCO was formed in 1966 by the merger of Richfield Oil Company and Atlantic Refining Company. Atlantic Refining was part of the Standard Oil Trust. Sinclair Oil Company was merged into ARCO in 1969.

Marathon, are partners in several ventures in other geographic areas. The more prominent minor-minor partnerships are Continental-Union, and Standard of Indiana-Atlantic Richfield. Both of these partnerships (in each venture) are based on contractual agreements.

A partnership nearly as eminent as some partnerships between majors is one between Phillips, a minor, and ENI, a non-host government company. These participants are involved in at least eighteen contractual joint ventures, and have joint operations in five areas. Several of their operations are in the North Sea and the Middle East.

Joint Venture Evolution

Viewing a joint venture as a static unchanging enterprise between its participants may be misleading and in many cases incorrect. Joint ventures change and evolve over time. These changes come about in different ways. In some instances the original concessionaire may not have conducted exploration and drilling operations. However, as the venture expands its membership, or as control of the venture changes, activity may begin to flourish.

The evolution patterns of joint ventures yield insights into the development of concession areas. These patterns aid in the understanding of the joint venture process. With this end-in-view, several examples will be discussed. In two of these examples the majors are the primary participants; in others, the minors and majors are the chief participants. The ownership changes in two of these ventures and the approximate time sequence of the changes are presented in Table 26.

The first example included in Table 26 is the Dansk Underground

TABLE 26

OWNERSHIP CHANGES IN DANSK UNDERGROUND CONSORTIUM AND ARABIAN AMERICAN OIL COMPANY, BY PARTICIPANT AND COMPANY, 1933-1965

Year	Participants	Ownership Interest
	Dansk Underground Consortium	
1960	A. P. Moeller	100.0
1963	A. P. Moeller	40.0
	Gulf Oil Corporation	30.0
	Royal Dutch Shell	30.0
1965	A. P. Moeller	25.0
	Gulf Oil Corporation	30.0
	Royal Dutch Shell	30.0
	Texaco, Incorporated	7.5
	Standard Oil, California	7.5
	Arabian American Oil Company	
1933	Standard Oil, California	100.0
1936	Standard Oil, California	50.0
	Texaco, Incorporated	50.0
1947	Standard Oil, California	30.0
	Texaco, Incorporated	30.0
	Standard Oil, New Jersey	30.0
	Mobil Oil Corporation	10.0

Source: The Oil and Gas Journal, 1960-1965, and The Aramco Handbook, 1968.

Consortium (DUC). DUC was formed in 1963. Prior to this time, A. P. Moeller held the concession which DUC acquired upon its formation. Moeller had acquired an exclusive fifty year concession covering most of Denmark and its continental shelf. No record of exploration or drilling activity prior to 1963 was found by the author.

In 1963, arrangements were made whereby Gulf Oil of Denmark, a subsidiary of Gulf Oil Corporation, Shell Denmark Limited, a member of the Royal Dutch/Shell Group, and Moeller formed the consortium, DUC. Gulf and Shell each received a 30 percent interest in DUC; Moeller received a 40 percent interest. Gulf became the operator for the three participants.

Between 1963 and 1965 DUC acquired the concession rights to the Danish section of the North Sea. Exploration and drilling began in this sea and in Denmark about this time.

In 1965 Texaco Denmark Incorporated, a subsidiary of Texaco, and California Oil Company of Denmark, a subsidiary of Standard of California, joined the consortium. Texaco and Standard of California each received a 7.5 percent interest and Moeller's share was reduced to 25 percent.

Since 1965 there have been no further changes in the ownership of DUC. However, in 1971, representatives of Texaco were considering increasing Texaco's interest to 10 percent. (The outcome of these negotiations is not known as of this writing.)

The reasons for the organizational changes in DUC are largely a matter of speculation. Gulf and Shell may have been invited to join because Moeller was unable (either financially or technically) to develop

his concession. Gulf and Shell possessed not only the technology to develop the concession, but also the marketing facilities to distribute the realized production, if any. Perhaps the companies agreed to jointly participate in DUC in order to spread the financial risks involved.

It does not seem reasonable that Gulf and Shell were attempting to spread their financial risk when Texaco and Standard of California joined DUC, since neither Gulf nor Shell's ownership shares (and hence their risk shares) changed. It was Moeller who relinquished the 15 percent interest to Texaco and Standard of California. Perhaps Moeller was attempting to further reduce his risks. Other reasons for these ownership changes are a matter of speculation.

The evolution of a joint venture in Western Australia is similar to that of DUC. The ownership of Western Australian Petroleum Proprietary Limited (WAPET) has experienced changes similar to those of DUC. Indeed, three of the same partners, Shell, Texaco, and Standard of California, are in both ventures.[19]

Another example is the Arabian American Oil Company (ARAMCO). Standard of California was granted an exclusive concession by King Ibn Saud of Saudi Arabia in 1933. In 1936 Texaco and Standard of California formed ARAMCO. Also in 1936 rich oil deposits were discovered, and by 1939, oil exports exceeded 500,000 tons.[20] In 1947 after a series of disputes and negotiations, Standard of New Jersey and Mobil joined

---

[19]See the Appendix, Table A5, Venture Number 1, p. 259.

[20]Schurr, Homan, and Associates, op. cit., p. 116.

Aramco.[21] Standard of New Jersey acquired a 30 percent interest and Mobil acquired a 10 percent interest. Texaco and Standard of California each retained a 30 percent interest.

Several joint ventures experience fewer changes than the above examples. These changes often involve one new member joining an existing joint venture. Usually a minor joins a venture in which a major holds an interest. Ventures of this type are common in several areas.

In 1963 Spanish Gulf Oil Company, a subsidiary of Gulf, and Compana Espanola de Petroleos (CEPSA) each held a 50 percent interest in a five million acre concession in Spanish Sahara. Continental Oil Company acquired a 50 percent interest in this concession. CEPSA and Gulf each retained a 25 percent interest. Continental, acting as operator for the other members, began drilling operations; however, as of this writing, no discoveries have been reported.

Gulf and Continental are also parties to similar ventures in the North Sea. In one of these ventures, Gulf and the National Coal Board, a British Agency, had 50-50 shares in ten concession blocks in the British North Sea area. Continental acquired a 40 percent interest in these ten blocks from the National Coal Board. Continental then became the operator in the venture.

Several joint ventures have been formed in the last ten years which arouse curiosity. For example, in 1969 Occidental and Texaco

---

[21] These negotiations involved not only the four companies who reorganized ARAMCO, but also BP, CFP, Royal Dutch Shell and C. S. Gulbenkian. The disputes involved the breach of the Red Line agreement by Mobil and Standard of New Jersey.

acquired a joint concession in Peru. In 1968 Phillips and Mobil jointly acquired 98 concession blocks on the North Slope. In 1967 and 1968 Occidental discovered three large fields in Libya. Between 1964 and 1966 Phillips and its partners discovered two large fields in the North Sea. Since oil companies, (especially the larger ones) have extensive intelligence gathering organizations,[22] one may speculate that these joint ventures are less than random.

---

[22]Peach and Constantin, op. cit., p. 373.

CHAPTER V

JOINT OWNERSHIP OF THE MEANS OF PRODUCTION IN THE INTERNATIONAL PETROLEUM INDUSTRY

In this chapter joint venture data on exploration and drilling, producing operations, pipeline systems, and refineries are examined. Data on exploration and drilling joint ventures are analyzed in chapters III and IV of this study. Data on producing operations and pipeline systems are analyzed in chapters four and five of John R. Munkirs' thesis.[1] In addition to the joint venture data in these two studies, similar data were collected and tabulated on refineries. These three sets of data are analyzed in this chapter.

Since each international major, and most international minors, are fully integrated oil companies, their operations include the four phases mentioned above. Therefore, a more comprehensive understanding of joint ventures in the petroleum industry is possible if the three sets of data are combined.

One part of the analysis in this chapter focuses upon joint ventures in which the international majors and the international minors

---

[1]See John R. Munkirs' unpublished Ph.D. thesis, "Joint Ventures in the International Petroleum Industry: Producing Operations and Pipeline Systems," pp. 97-209.

are participants. First, these two groups are separately analyzed. This analysis includes participation in and control of joint ventures. It also includes the degree of ownership (joint and individual) of the means of production by the majors and minors. Further, the magnitude of joint interlocking ownership arrangements resulting from joint ventures is examined. These interlocks are discussed by group and for selected participants.

In part two of this chapter, the above analysis serves as a vehicle to discuss certain aspects of the organizational structure of the international petroleum industry. The Veblenian dichotomy is used to comment on this structure.

Joint Venture Magnitude

Millions of square miles of land and water are under contract to petroleum companies and agencies. Approximately 28,000,000 (1970) barrels of crude oil are pumped each day from these concessions. This oil is transported through a 34,000 mile network of pipelines and arrives at refineries capable of processing over 34,000,000 barrels a day.[2]

Joint ventures are a fundamental part of the organizational structure of the international petroleum industry. The data collected in this study indicate that more than half of means of production are jointly owned. The means of production in the oil industry include: exploration equipment and techniques, land, drilling equipment, pumping equipment, transportation facilities, and refining equipment. Each phase of produc-

---

[2]Production, pipeline, and refining data exclude the continental United States, and the Communist bloc countries.

tion also requires a high degree of technical skill and knowledge. These means of production are essential; a deficiency in one will create a bottleneck in--if not a breakdown of--the production process.

Joint ownership of the means of production begins at the exploration phase. There are at least 109 joint exploration ventures in the ten areas. An average of five participants is involved in exploration joint ventures. The equipment required to conduct exploration may not necessarily be jointly owned, but much of it is jointly used, and the resulting information from exploration is jointly analyzed.

Joint exploration often leads to the joint purchase (or leasing) of concessions. There are 1,536 joint concessions in the ten areas. Not all of these are the result of joint exploration; however, a substantial portion of the joint concessions in six areas may be linked to joint exploration. At least 3.5 million square miles of land and water are under joint contract to petroleum companies and agencies. A substantial amount of "land" is, therefore, jointly owned (or leased), and land is considered to be a means of production.

If drilling activity is undertaken on a jointly owned concession, the equipment used and the knowledge necessary to drill for oil may be considered jointly owned. However, not all joint drilling is undertaken on jointly owned concessions. The data indicate several instances in which joint drilling (or the sharing of information from drilling) takes place on one-owner concessions. In these cases, the drilling equipment is jointly used, while the information resulting from this drilling is jointly owned.

There are 200 producing operations cited in John R. Munkirs' thesis. These operations produce 27.9 million barrels per day (1970) which is 99 percent of the total production in the ten areas. Of these 200 operations, 133 are joint ventures. The joint venture producing operations account for three-fourths of the production in the ten areas.[3] The essential element in production, oil, is in large part, jointly owned.

A one-owner pipeline is seldom built to transport oil from a jointly owned producing operation. In the ten areas there are 119 pipeline systems. Seventy-three of these systems are jointly owned. The jointly owned pipeline systems account for 59 percent of the pipeline mileage in the ten areas. In large part, pipelines, one of the primary means of oil transportation, is jointly owned.

There are three-hundred thirteen refining operations in the ten areas. One-hundred-forty-nine of these are jointly owned. These jointly owned refineries account for 47 percent of the daily refining capacity in the ten areas. Therefore, another essential part of oil production is substantially owned via joint ventures.

Joint ownership is conducted via joint ventures which flow and evolve from one phase of production to another. In the four phases of production there are 726 joint ventures in the ten areas. These ventures involve twenty-five companies and four groups, composed of government-owned companies (local and non-host), local private capital, and "others."

---

[3]Canada's production is excluded from the total before calculating this percent. The production figures are not available to the author by individual operation. However, 32 of Canada's 36 producing operations are joint ventures.

TABLE 27

JOINT PETROLEUM CONCESSIONS, PRODUCTION, PIPELINES, AND REFINING CAPACITY, TEN GEOGRAPHIC AREAS, 1971

	Concessions, Square Miles (000)	Production (000 b/d)		Pipelines Miles		Refining Capacity (000 b/d)	
	Total	Total	Percent of Total[a]	Total	Percent of Total[a]	Total	Percent of Total[a]
Africa	445	4,321	72	2,717	52	597	66
Alaska	14	97	100	172	100	0	0
Asia-Pacific	591	832	70	720	45	4,677	78
Australasia	850	150	100	679	94	317	41
Canada	114	--[b]	-	5,804	71	1,113	71
Central America	45	86	14	100	4	400	13
Middle East	471	13,437	97	4,540	76	1,949	69
North Sea	--[c]	10	100	0	0	0	0
South America	103	1,042	23	1,892	29	295	10
Western Europe	97	221	71	3,012	84	6,730	42
Total	2,730	20,196	75	19,636	59	16,078	47

Source: Compiled from data in the Appendix, Tables A2 through A-11, and Chapters IV and V of John R. Munkirs' Ph.D. thesis, pp. 97-209.

[a]Percent of total refers to the total for the area; percent of total in Total row refers to total for the ten areas.

[b]Not available to the author.

[c]Not available in square miles.

TABLE 28

NUMBER OF JOINT INTERLOCKING OWNERSHIP ARRANGEMENTS IN EXPLORATION AND DRILLING, PRODUCING OPERATIONS, PIPELINE SYSTEMS, REFINING OPERATIONS, TEN GEOGRAPHIC AREAS, 1957-1971[a]

Participant	Jersey	Shell	Texaco	Mobil	Gulf	SOCAL	BP	SOI	ARCO	Continental	Teneco	Phillips	Occidental	Union	Sun	Cities	Ashland	SOHIO	Amerada	Getty	Signal	Marathon	CFP	BASF	Petrofina	LPC	LG	JHG	Other	Total
Standard Oil, New Jersey	\																												
Royal Dutch Shell	186	\																											180
Texaco	32	45	\																										77
Mobil	59	46	31	\																									130
Gulf	21	22	23	14	\																								80
Standard Oil, California	19	98	100	31	15	\																							263
British Petroleum	33	44	22	37	25	13	\																						174
Standard of Indiana	10	10	8	3	7	6	1	\																					45
Atlantic Richfield	220	15	15	12	10	19	133	112	\																				536
Continental	12	13	12	7	26	11	7	4	10	\																			102
Tenneco	3	1	3	3	1	1	1	1	2	3	\																		19
Phillips	5	4	5	98	5	10	10	6	14	8	4	\																	169
Occidental	1	1	2	1	1	2	1	3	2	1	1	1	\																17
Union	4	5	9	5	4	9	18	30	28	5	5	3	1	\															126
Sun	4	5	8	4	3	4	2	106	147	6	2	15	0	9	\														315
Cities Service	5	5	2	2	1	1	2	2	6	16	1	1	1	3	13	\													61
Ashland	2	2	2	1	2	2	2	3	5	2	1	5	1	2	3	2	\												37
Standard of Ohio	5	4	5	4	10	5	10	0	6	6	0	1	0	1	1	1	0	\											59
Amerada-Hess	1	2	0	0	0	0	0	70	1	4	1	0	0	0	0	0	4	0	\										83
Getty	11	9	10	8	12	9	9	8	16	12	2	6	2	5	3	2	3	11	16	\									153
Signal	10	6	6	7	6	8	5	6	13	3	4	1	6	5	1	17	1	4	1	10	\								120
Marathon	6	6	4	3	1	4	2	3	15	10	1	1	0	8	3	3	1	0	5	4	0	\							83
CFP	27	26	14	23	5	7	25	0	7	8	2	23	0	3	1	0	1	4	2	6	2	14	\						210
BASF	10	12	9	3	0	2	4	2	0	0	0	0	0	0	1	0	1	0	0	0	3	4	3	\					54
Petrofina	3	1	3	1	1	1	11	3	4	4	0	65	0	1	2	0	1	0	0	2	0	1	14	0	\				117
Local Private Capital	40	29	35	39	18	33	41	24	3	9	4	80	0	6	5	0	0	0	12	4	8	8	5	54	54	\			508
Local Governments	12	18	11	10	11	7	10	5	5	25	2	4	3	6	3	1	2	0	58	2	0	0	46	1	1	98	\		362
Non-host Governments	29	13	17	14	3	11	19	4	6	4	4	103	1	7	3	14	0	1	1	1	0	2	52	4	71	121	121	\	729
Other	80	79	43	61	26	32	43	41	179	56	21	55	7	53	131	14	31	15	94	27	14	22	80	20	5	117	115	125	\	1598
Total	550	513	401	388	20	197	356	433	29	182	55	367	23	109	170	54	47	35	189	56	27	51	300	79	131	336	238	125		6419

(continued)

TABLE 28 (Continued)

Source: Compiled from data in the Appendix, Tables A2 through A-11, and Chapters IV and V of John R. Munkirs' unplublished Ph.D. thesis, pp. 97-209.

[a]Data for producing operations is for 1970; data for pipeline systems and refining operations is as of June, 1972.

These 726 joint ventures result in 6,419 interlocking ownership arrangements among these twenty-nine participants. The number of joint ventures and interlocking ownerships concomitant with these joint ventures indicate that the petroleum industry is, in large part, jointly owned.

International Majors

The seven international majors control 54 percent of the joint concessions in the ten areas. These concessions cover at least 1,403,000 square miles, which is 40 percent of the joint concession area in the ten areas. The majors control more than half of the joint concessions in five of the ten areas, and more than half of the joint concession area in three other areas.

On their joint concessions, the majors produce approximately 16.3 million barrels of oil per day (1970). This is 61 percent of the oil produced outside of the continental United States, the U.S.S.R., and Canada. The majors produce an additional 4.2 million barrels per day (1970) in one-owner operations. Therefore, the majors produce 20.5 million barrels of oil per day, which is 77 percent of the oil produced in the ten areas. As a group, the majors control a majority of the production--either via joint venture, or one-owner operations--in six of the ten areas.[4]

The majors control 60 percent of the pipeline mileage in the ten areas. Joint venture operations account for 47 percent of this pipeline mileage and one-owner operations account for 13 percent. The majors control a majority of the pipeline mileage in five of the ten areas.

---

[4]See Munkirs, op.cit., p. 132.

Sixty-one percent of the refining capacity in the ten areas is controlled by the majors. Approximately 29 percent of this capacity is controlled via joint ventures and 32 percent is controlled via one-owner operations. The majors control more than half of the refining capacity in six of the ten areas.

At least one of the majors participates in 345 of the joint ventures in the ten areas. An average of four majors participate in those joint ventures in which more than one major is involved. The 187 joint ventures in which more than one major participates result in 916 interlocking ownership arrangements among the seven majors.

Royal Dutch Shell is involved in 139 joint ventures and has 441 interlocks with the other six majors. Shell has at least 22 interlocks with each of the other majors. Standard of New Jersey (Exxon) is involved in 116 joint ventures and 350 joint interlocks with the other six majors. Jersey has at least 19 interlocks with each of the other majors. Shell and Standard of New Jersey are interlocked with each other 186 times in the ten areas, which is the largest number of interlocks between two majors.

Standard of California is a participant in 96 joint ventures and 276 interlocks, the third largest number of interlocks among the majors. Texaco is involved in 116 joint ventures in the ten areas and has the fourth largest number of interlocks among the majors, 253. Standard of California and Texaco are interlocked with each other 100 times in the ten areas. This is the second largest number of interlocks between two majors.

TABLE 29

AMOUNT OF JOINT VENTURE PETROLEUM CONCESSIONS, PRODUCTION, PIPELINES, AND REFINING CAPACITY CONTROLLED BY THE INTERNATIONAL MAJORS, TEN GEOGRAPHIC AREAS, 1971

	Concessions, Square Miles (000) Total	Production (000 b/d) Total	Production (000 b/d) Percent of Total[a]	Pipelines Miles Total	Pipelines Miles Percent of Total[a]	Refining Capacity (000 b/d) Total	Refining Capacity (000 b/d) Percent of Total[a]
Africa	129	2,077	35	2,229	43	360	40
Alaska	2	2	2	22	13	0	0
Asia-Pacific	227	763	64	0	0	1,860	31
Australasia	560	125	83	445	62	417	41
Canada	53	--[b]	--	4,331	53	1,050	66
Central America	27	66	11	0	0	49	2
Middle East	312	12,417	90	4,464	75	1,789	63
North Sea	--[c]	0	0	0	0	0	0
South America	29	665	15	1,802	28	164	5
Western Europe	64	208	67	2,454	68	4,216	26
Total	1,403	16,323	61	15,757	47	9,805	29

Source: Compiled from data in the Appendix, Tables A2 through A-11, and Chapters IV and V of John R. Munkirs' unplublished Ph.D. thesis, pp. 97-209.

[a]Percent of total refers to the total for the area; percent of total in Total row refers to total for the ten areas.

[b]Not available to the author

[c]Not available in aquare miles.

TABLE 30

AMOUNT OF ONE-OWNER PETROLEUM PRODUCTION, PIPELINES, AND REFINING CAPACITY CONTROLLED BY THE INTERNATIONAL MAJORS, TEN GEOGRAPHIC AREAS, 1971

	Production (000 b/d)		Pipelines Miles		Refining Capacity (000 b/d)	
	Total	Percent of Total[a]	Total	Percent of Total[a]	Total	Percent of Total[a]
Africa	923	15	310	6	74	8
Alaska	0	0	0	0	21	54
Asia-Pacific	147	12	0	0	686	11
Australasia	0[b]	0	46	6	345	45
Canada	-	-	447	6	277	17
Central America	45	8	120	5	1,375	46
Middle East	221	2	0	0	178	6
North Sea	0	0	0	0	0	0
South America	2,804	61	3,049	48	1,430	46
Western Europe	20	7	245	7	6,664	42
Total	4,161	16	4,217	13	11,050	32

Source: Compiled from data in the Appendix, Tables A2 through A-11, and Chapters IV and V of John R. Munkirs' unplublished Ph.D thesis, pp. 97-209.

[a]Percent of total refers to the total for the area; percent of total in Total row refers to total for the ten areas.

[b]Not available to the author.

Mobil is involved in 101 joint ventures, and 218 interlocks with the other majors, the fifth largest number of interlocks among the majors. Mobil and Standard of New Jersey are interlocked 59 times with each other in the ten areas. This is the fourth largest number of interlocks between two majors.

Standard of California and Shell are interlocked 98 times with each other; Mobil and Shell have 46 interlocks with each other. The Standard of California-Shell combination is the third largest among the majors, while the Mobil-Shell combination is fifth largest out of the twenty-one possible two-major combinations. The interlocks discussed above, as well as the remaining interlocks among the majors, are presented in Table 31.

The number of indirect interlocking connections resulting from the direct interlocking ownership arrangements is enormous. Applying the equation set forth in Chapter IV the number of possible interlocks is over 26 billion.[5] Some of these possible indirect connections are surely in effect.

Figure 4 is an example of both direct and indirect interlocking arrangements among the majors. Two joint ventures are involved in this example. Gulf, Standard of New Jersey, and Royal Dutch Shell have a contractual agreement involving a concession and a producing operation. Shell and Standard of New Jersey each receive 25 percent of the production. Mene Grande Oil Company, a subsidiary of Gulf, receives the other 50 percent of the production.

---

[5]See footnote 5 on p. 107-109.

TABLE 31

NUMBER OF JOINT INTERLOCKING OWNERSHIP ARRANGEMENTS IN EXPLORATION AND DRILLING, PRODUCING OPERATIONS, PIPELINE SYSTEMS, AND REFINING OPERATIONS, INTERNATIONAL MAJORS, TEN GEOGRAPHIC AREAS, 1957-1971[a]

Company / Company	Jersey	Shell	Texaco	Mobil	Gulf	SOCAL	BP	Total
Standard Oil (New Jersey)								
Royal Dutch Shell Group	186							186
Texaco	32	45						77
Mobil Oil	59	46	31					136
Gulf Oil	21	22	23	14				80
Standard Oil of California	19	98	100	31	15			263
British Petroleum	33	44	22	37	25	13		174
Total	350	255	176	82	40	13		916

Source: Compiled from data in the Appendix, Tables A2 through A-11, and Chapters IV and V of John R. Munkirs' unplublished Ph.D. thesis, pp. 97-209.

[a]Data for producing operations are for 1970; data for pipeline systems and refining operations is as of June, 1972.

FIGURE 4

JOINT VENTURE PRODUCING AND REFINING OPERATIONS
OF MENE GRANDE OIL COMPANY IN VENEZUELA

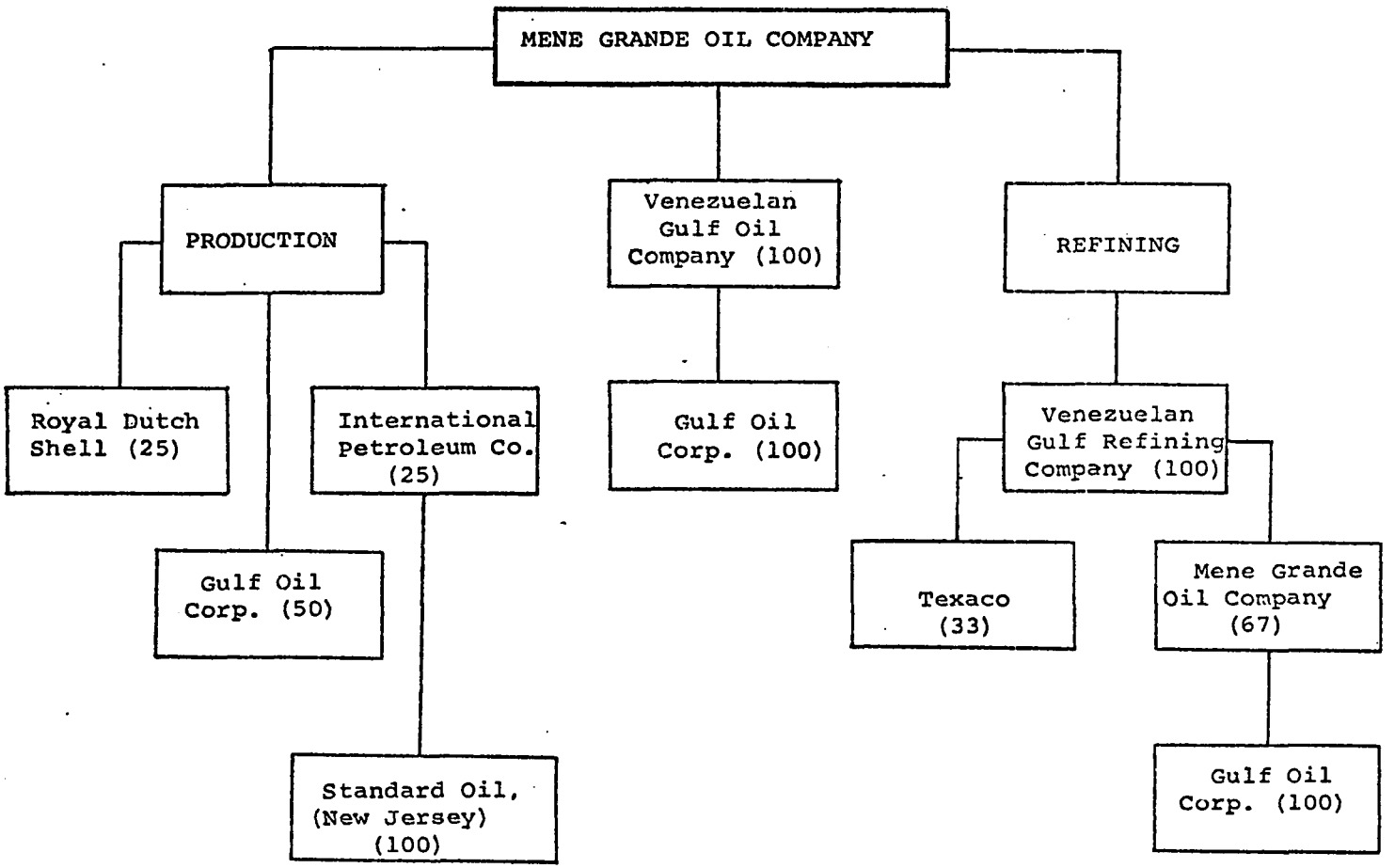

Source: International Petroleum Register, 1966-67, p. 127 and 231, and USA Oil Industry Directory 1972, p. 118.

The second venture in Figure 4 is a joint subsidiary in which Texaco and Gulf own the Venezuelan Gulf Refining Company. Gulf owns two-thirds of the venture through Mene Grande; Texaco owns the remaining one-third.

Since Mene Grande is involved in both ventures, Gulf is directly connected with Shell, Standard of New Jersey, and Texaco. Through Gulf, Texaco is indirectly connected with both Shell and Standard of New Jersey.

This example demonstrates one way in which the majors are directly and indirectly connected. Other types of direct and indirect ownership arrangements, covering each phase of petroleum production, exist. Although the form differs, the pattern remains essentially the same.

The joint ventures, interlocking ownership arrangements, and possible indirect connections among the majors are numerous. Also, these joint ventures and joint interlocks are fairly evenly distributed among the majors. Given the number and distribution of joint ventures and joint interlocks among the majors, it is difficult not to conclude that they are a cohesive group.

Professor Michael Tanzer, in examining the relationship between the underdeveloped countries and the major international oil companies, notes that the majors seem to negotiate as a united group. Tanzer points out that this united action occurs during oil boycotts. Beyond boycotts, he does not analyze their actions.[6] The data in this study indicate that not only in boycotts, but in most negotiations, action other than united action is not likely to occur.

---

[6]Michael Tanzer, The Political Economy of International Oil and The Underdeveloped Countries, (Boston: Beacon Press, 1969), p. 93.

Since joint ventures are legal contracts, the seven majors are legally bound together in each of the ten areas. These legal constraints make unilateral action unlikely. Unilateral action would, in all likelihood, impinge upon the contractual obligations of a company.

International Minors

The eighteen international minors control 32 percent of the joint concessions in the ten areas. These concessions cover 1,326,900 square miles, which is 38 percent of the joint concession area in the ten areas. The minors control more than half of the joint concessions in five of the ten areas and more than half of the joint concession area in five areas.

On their joint concessions the minors produce approximately 3.4 million barrels of oil per day (1970). This is 13 percent of the oil produced outside of the continental United States, the U.S.S.R., and Canada. The minors produce an additional 1.8 million barrels per day (1970) in one-owner operations. Therefore, the minors produce 5.3 million barrels of oil per day, which is 19 percent of the oil produced in the ten areas. As a group, the minors control a majority of the production, either via joint venture, or one-owner operations, in two of the ten areas.

The minors control 32 percent of the pipeline mileage in the ten areas. Joint venture operations account for 11 percent of this pipeline mileage; one-owner operations account for 21 percent. The minors control over half of the pipeline mileage in two of the ten areas.

About one-tenth of the refining capacity in the ten areas is controlled by the minors. Approximately 4 percent of the minors'

TABLE 32

AMOUNT OF ONE-OWNER PETROLEUM PRODUCTION, PIPELINES, AND REFINING CAPACITY CONTROLLED BY THE INTERNATIONAL MINORS, TEN GEOGRAPHIC AREAS, 1971

	Production (000 b/d)		Pipelines Miles		Refining Capacity (000 b/d)	
	Total	Percent of Total [a]	Total	Percent of Total [a]	Total	Percent of Total [a]
Africa	709	13	2,185	42	0	0
Alaska	0	0	0	0	0	0
Asia-Pacific	211	18	874	55	0	0
Australasia	0	0	0	0	27	4
Canada	--[b]	-	873	11	55	3
Central America	2	3	0	0	555	18
Middle East	118	1	1,396	23	50	2
North Sea	0	0	0	0	0	0
South America	726	16	1,437	23	57	2
Western Europe	51	16	337	9	896	6
Total	1,817	7	7,102	21	1,640	5

Source: Compiled from data in the Appendix, Tables A2 through A-11, and Chapters IV and V of John R. Munkirs' unpublished Ph.D. thesis, pp. 97-209.

[a]Not available to the author.

TABLE 33

AMOUNT OF JOINT VENTURE PETROLEUM CONCESSIONS, PRODUCTION, PIPELINES, AND REFINING CAPACITY CONTROLLED BY THE INTERNATIONAL MINORS, TEN GEOGRAPHIC MINORS, 1971

	Concessions, Square Miles (000)	Production (000 b/d)		Pipelines Miles		Refining Capacity (000 b/d)	
	Total	Total	Percent of Total[a]	Total	Percent of Total[a]	Total	Percent of Total[a]
Africa	316	1,890	32	265	5	16	1
Alaska	12	95	98	150	87	0	0
Asia-Pacific	364	69	6	720	45	244	4
Australasia	290	10[d]	6	234	32	0	0
Canada	61	--[d]	--	1,473	18	83	5
Central America	18	20	3	0	0	0	0
Middle East	159	959	7	60[b]	1	0	0
North Sea[b]	--[c]	9	87	--[b]	---	0	0
South America	74	377	8	90	1	0	0
Western Europe	33	11	4	525	15	959	6
Total	1,327	3,440	12	3,517	11	1,296	4

Source: Compiled from data in the Appendix, Tables A2 through A-11, and Chapters IV and V of John R. Munkirs' unpublished Ph.D. thesis, pp. 97-209.

[a]Percent of total refers to the total for the area; percent of total in Total row refers to total for the ten areas.

[b]Significant changes have occurred in the North Sea since data for this study was completed. For data on more recent developments, see Irvin L. White, Don E. Kash, Michael A. Chartock, Michael D. Devine, and R. Leon Leonard, North Sea Oil and Gas, Norman, University of Oklahoma Press, 1973.

[c]Not available in miles.

[d]Not available to the author.

refining capacity is controlled via joint ventures and 5 percent is controlled via one-owner operations. Europe and Central America are the areas in which most of the minors' refineries are located.

At least one of the minors participates in 354 of the joint ventures in the ten areas. The 210 joint ventures in which more than one minor participates, result in 1,088 interlocking ownership arrangements among the eighteen minors.

Atlantic Richfield (ARCO) is involved in 64 joint ventures and has 388 interlocks with the other eighteen minors. ARCO is interlocked at least once with sixteen of the other seventeen minors. ARCO and Sun have 147 interlocks with each other in the ten areas, the largest number of interlocks between two minors.

Standard of Indiana (SOI) is involved in 48 joint ventures and 354 interlocks with the other minors. SOI is interlocked at least once with sixteen of the other seventeen minors. ARCO and SOI are interlocked 112 times with each other in the ten areas, while SOI and Sun are interlocked 106 times. The SOI-ARCO combination is the second largest among the minors; the SOI-Sun combination is third.

Sun is involved in 43 joint ventures and has the third largest number of interlocks among the minors, 313. As mentioned above, Sun is involved in two of the largest two-minor interlocks.

Continental is a participant in 57 joint ventures and has 102 interlocks with the other minors. This is the eighth largest number of interlocks among the eighteen minors. However, Continental has the most even distribution of interlocks among the minors. For example, the largest

TABLE 34

NUMBER OF JOINT INTERLOCKING OWNERSHIP ARRANGEMENTS IN EXPLORATION AND DRILLING, PRODUCING OPERATIONS, PIPELINE SYSTEMS, AND REFINING OPERATIONS, INTERNATIONAL MINORS, TEN GEOGRAPHIC AREAS, 1957-1971[a]

COMPANY / COMPANY	SOI	ARCO	Continental	Tenneco	Phillips	Occidental	Union	Sun	Cities	Ashland	SOHIO	Amerada	Getty	Signal	Marathon	CFP	BASF	Petrofina	Total
Standard of Indiana																			
Atlantic Richfield	112																		112
Continental	4	10																	14
Tenneco	1	2	3																6
Phillips	6	14	8	4															32
Occidental	3	2	1	1	1														8
Union	30	28	5	5	3	1													72
Sun	106	147	6	2	15	0	9												285
Cities Service	2	6	16	1	1	1	3	13											43
Ashland	3	5	2	1	5	1	2	3	2										24
Standard of Ohio	0	6	6	0	1	0	1	1	1	0									16
Amerada-Hess	70	1	4	1	0	0	0	0	0	4	0								80
Getty	8	16	12	2	6	2	5	3	2	3	11	16							86
Signal	6	13	3	4	1	6	5	1	17	1	4	1	10						72
Marathon	3	15	10	1	1	0	8	3	3	1	0	5	4	0					64
CFP	0	7	8	2	23	0	3	1	0	1	4	2	6	2	14				73
BASF	2	0	0	0	0	0	0	1	0	1	0	0	0	3	4	3			14
Petrofina	3	4	4	0	65	0	1	2	0	1	0	0	2	0	1	14	0		97
Total	359	276	88	24	122	11	37	28	25	12	19	24	22	5	19	17	0	0	1088

Source: Compiled from data in the Appendix, Tables A2 through A-11, and Chapters IV and V of John R. Munkirs' Ph.D. thesis, pp. 97-209.

[a]Data for producing operations is for 1970; data for pipeline systems and refining operations is as of June, 1972.

number of interlocks between Continental and another minor is 16. Also, this company is interlocked three or more times with fourteen of the other seventeen minors.

Standard of Indiana, ARCO, Sun, and Continental represent the core of the interlocks among the minors. These four companies are interlocked with each other 385 times. This is 35 percent of the interlocks among the eighteen minors.

Except for the four companies discussed above, the minors are not as cohesive a group as the majors. Out of the 153 possible two-company combinations, 78 are connected two or fewer times. The seven majors have 916 mutual interlocks while the eighteen minors have 1,088; 777 of these involve four minors.

Even ARCO, Standard of Indiana, Sun, and Continental are not as cohesive as the seven majors. Of the six possible two-company combinations between these four minors, three have ten or less direct interlocks. The fewest between two majors is thirteen.

International Majors and Minors

Collectively, the majors and minors participate in 699 joint ventures in the ten areas. These joint ventures result in 3,332 joint interlocking ownership arrangements among these twenty-five international oil companies.

Examining the data in Table 35, it may be seen that the majors form a central core in the web of interlocking ownerships. For example, Standard of New Jersey (Exxon) is engaged in 116 joint ventures in the ten areas. Jersey is involved in at least one joint venture with each

TABLE 35

NUMBER OF JOINT INTERLOCKING OWNERSHIP ARRANGEMENTS IN EXPLORATION AND DRILLING, PRODUCING OPERATIONS, PIPELINE SYSTEMS, AND REFINING OPERATIONS, INTERNATIONAL MAJORS AND MINORS, TEN GEOGRAPHIC AREAS, 1957-1971[a]

COMPANY	Jersey	Shell	Texaco	Mobil	Gulf	SOCAL	BP	SOI	ARCO	Continental	Tenneco	Phillips	Occidental	Union	Sun	Cities	Ashland	SOHIO	Amerada	Getty	Signal	Marathon	CFP	BASF	Petrofina	Total
Standard Oil, New Jersey																										
Royal Dutch Shell	186																									186
Texaco	32	45																								77
Mobil	59	46	31																							136
Gulf	21	27	23	14																						80
Standard Oil, California	19	98	180	31	15																					263
British Petroleum	33	44	22	37	25	13																				174
Standard Oil, Indiana	10	10	8	3	7	6	1																			45
Atlantic Richfield	220	15	15	12	30	19	133	112																		536
Continental	12	13	12	7	26	11	7	4	10																	102
Tenneco	3	1	3	3	1	1	1	1	2	3																19
Phillips	5	4	5	98	5	10	10	6	14	8	4															169
Occidental	1	1	2	1	1	2	1	3	2	1	1	1														17
Union	4	5	9	5	4	9	18	30	23	5	5	3	1													126
Sun	4	5	8	4	3	4	2	106	147	6	2	15	0	9												315
Cities	5	5	2	2	1	1	2	2	6	16	1	1	1	3	13											61
Ashland	2	2	2	1	2	2	2	3	5	2	1	5	1	2	3	2										37
Standard Oil, Ohio	5	4	5	4	10	5	10	0	6	6	0	1	0	1	1	1	0									59
Amerada	1	2	0	0	0	0	0	70	1	4	1	0	0	0	0	0	4	0								83
Getty	11	8	10	8	12	9	9	8	16	12	2	6	2	5	3	2	3	11	16							153
Signal	10	6	6	7	6	8	5	6	13	3	4	1	6	5	1	17	1	4	1	10						120
Marathon	6	9	4	3	1	4	2	3	15	10	1	1	0	8	3	3	1	0	5	4	0					83
CFP	27	36	14	23	5	7	25	0	7	8	2	23	0	3	1	0	1	4	2	6	2	14				210
BASF	10	12	9	3	0	2	4	2	0	0	0	0	0	0	1	0	1	0	0	0	3	4	3			54
Petrofina	3	1	2	1	1	1	11	3	4	4	0	65	0	1	2	0	1	0	0	2	0	1	14	0		117
Total	689	394	292	267	135	114	243	359	276	88	24	122	11	37	28	25	12	19	24	22	5	19	17	0	0	3222

(continued)

TABLE 35 (Continued)

Source: Compiled from data in the Appendix, Tables A2 through A-11, and Chapters IV and V of John R. Munkirs' Ph.D. unplublished Ph.D. thesis, pp. 97-209.

[a]Data for producing operations is for 1970; data for pipeline systems and refining operations is as of June, 1972.

of the other participants. These joint ventures res-lt in 689 interlocks with these participants. Royal Dutch Shell has 580 interlocking ownerships with the other twenty-four participants. Shell is interlocked at least once with each of the other twenty-four participants.

Each of the remaining five majors has over 200 interlocking ownerships with the other twenty-four participants. Gulf is interlocked with twenty-two of the other participants while Texaco, Mobil, Standard of California, and BP are each interlocked with twenty-three of the other participants.

Four minors have more than 200 interlocks with the other twenty-four minors. However, no minor is interlocked with each of the other twenty-four participants. ARCO is interlocked with twenty-three of the participants; however, 75 percent of ARCO's interlocks are with four participants. The minors' interlocks are not as evenly distributed among the twenty-five participants as the majors. For example, Continental has the most even distribution of interlocks for a minor, and BP has the most uneven distribution of interlocks for a major. Yet, Continental's interlocks are less evenly distributed than BP's.

On the basis of both magnitude and distribution of interlocking ownership arrangements, the seven majors form a central core among the twenty-five majors and minors.

Adding the ownership interests of the majors and minors together reveals that these two groups control 78 percent of the joint venture exploration, 86 percent of the joint concessions, 80 percent of the joint drilling, 96 percent of the production, 92 percent of the pipeline mileage, and 70 percent of the refining capacity in the ten areas.

While these two groups have almost complete control of the four phases of production in the oil industry, it is important to examine these phases as a process. This examination indicates that the majors are not only the dominant group in terms of ownership, but also that they are able to control certain phases of production which they do not own. For example, Occidental Petroleum Corporation pumps 700,000 barrels of oil per day out of four fields in Libya. A pipeline gathering system collects this oil and brings it to a 150 mile mainline. This gathering system and mainline are owned by Occidental. However, Occidental's mainline ties inot a trunkline owned by Standard of New Jersey. Jersey's trunkline then delivers Occidental's oil to Marsa-el Brega on the north coast of Libya.[7] In effect, Jersey may, if it wishes, control the amount of oil which Occidental may pump from its Libyan fields.

This example is typical of pipeline arrangements in the ten areas. The international minors own eleven, one-owner pipeline systems. However, the minors do not own any major pipeline with the capability of delivering oil to a seaport. In joint ventures, the minors, along with government-owned companies, have controlling interest in twenty-four pipeline systems. However, these twenty-four systems represent only 12 percent of the pipeline mileage in the ten areas. Therefore, while the majors control 60 percent of the pipeline mileage in the ten areas by direct ownership, they effectively control nearly 88 percent of the pipeline systems. Since most of the oil in the ten areas is exported, control of transportation to seaports represents, in many cases, control of production.

---

[7] See Munkirs, op.cit., pp. 249-250

The magnitude of interlocking ownerships among the twenty-five majors and minors demands that the notion, "There is no such thing as 'the oil industry,' it's just a bunch of outfits competing with each other and each one has its own policies,"[8] be rejected. Since, in large part, the means of production are jointly owned, matters of policy must be jointly determined. The role of the majors as a central core among the participants, places them in the position of determining policy matters affecting the industry. These policy matters affect the order and organization of the international petroleum industry.

Order and Organization

Order, in the petroleum industry and its markets, means: (1) controlling the supply of oil, (2) dividing market regions, (3) setting prices, (4) controlling the cost of production, (5) maintaining adequate facilities and sharing those facilities, and (6) controlling technological advancements. The achievement of order in an industry, therefore, depends upon communication and cooperation among the participants. To achieve cooperation and communication--and, therefore, order--in an industry which reaches into nearly every corner of the earth, requires a sophisticated organizational structure. This organizational structure must enforce the rules and methods of conducting business. These rules must apply to each participant capable of creating disorder in the industry.

Insurgents may disrupt the order of some market regions by disobeying the established rules of conducting business. To maintain order,

---

[8]Editorial, "The Oil Industry," The Oil and Gas Journal, January 15, 1962, p. 51.

therefore, insurgents must be controlled. One method of control is to acquire part of their decision making apparatus. If this can be accomplished, order can be restored without recourse to price competition or other disruptive practices.

As a force influencing supply, price, cost of production, et al., competition runs counter to orderly markets. Competition and its disrupting effects must be restrained or made ineffective, if order, organization, and cooperation are to flourish.

Order and organization are two concepts historically related to the petroleum industry. The relationship of these two concepts to the industry dates from at least the late 1800's. The Standard Oil Trust was one of the first attempts to bring both order and organization into the domestic industry. The Achnacarry agreements in 1928 were one of the first attempts at organization in the international industry.

The main principles of "The Pool Association of 17 September 1928," the official title of the Achnacarry agreement, may be summarized as:

(1) Each company was to retain the percentage of the market, everywhere, enjoyed at the time by that company. (Diplomats would call this "peace on the basis of the status quo.")
(2) The existing facilities of all companies were to be made available to competitors at not less than actual cost but at a cost less than any company would incur if it built new facilities.
(3) New facilities were to be built only to supply increased consumption requirements.
(4) Each producing area was to have the advantage arising from its geographical position--that is, should sell in the nearest market.
(5) Supplies for each market should be drawn from the nearest producing area.

(6) Surplus production in any producing area was not to be "dumped" in other areas to the disturbance of the price structure there prevailing.
(7) No measures were to be taken which would materially increase the cost of producing oil.[9]

The first signatories to this agreement were Royal Dutch Shell, Standard of New Jersey, and Anglo-Persian Oil Company (now British Petroleum Company). Subsequently, twelve other oil companies accepted the main provisions of the agreement.[10]

Adolf Berle stated that the Achnacarry agreement ". . . established what may be described, without too much exaggeration, as the most successful experiment in economic world government thus far achieved in the twentieth century."[11]

By 1952, substantial evidence indicated that an international petroleum cartel existed. The Federal Trade Commission published a report in 1952 which examined the cooperation among the seven major international oil companies from the Achnacarry agreements in 1928 to 1952. The commission concluded its report by charging these companies with conspiring to fix prices, divide markets, and freeze out competition.[12]

Writing in 1955 Berle stated:

---

[9]Adolf A. Berle, Jr., The 20th Century Capitalist Revolution, (New York: Harcourt, Barce, & Company, 1955), pp. 147-148.

[10]The other companies which later accepted the many provisions of the Achnacarry agreement were Atlantic Refining (now Atlantic Richfield), Cities Service, Continental, Gulf, Sinclair (now Atlantic Richfield), Richfield (now Atlantic Richfield), Standard of California, Standard of Indiana, Standard of New York (now Mobil), The Texas Company (now Texaco), Tidewater (now Getty), Union, and Vacuum (now Mobil).

[11]Berle, op. cit., p. 147.

[12]Federal Trade Commission, The International Petroleum Cartel, op. cit., pp. 47-112.

> In point of surprising fact, the large American corporations in certain fields have more nearly achieved a stable and working world government than has yet been achieved by any other institution. The outstanding illustration is the case of the oil industry.[13]

World government means world organization. If Berle is correct, then the international oil industry has both order and organization.

Since 1955, joint ventures have become a prominent form of organization in the industry. Joint ventures serve as one mechanism to bring order, stability, and organization to the international petroleum industry. The interlocking ownership arrangements precipitate the flow of information among the majors and the minors, as well as between the two groups. The joint ventures provide an intensive communication network capable of reaching each company.

An almost constant flow of information about the activities of each company is available to most of the other companies. In addition, large parts of the means of production are jointly owned. Therefore, decisions on such things as supply, price, and markets must be jointly arrived at.

The evidence of a world organization in the petroleum industry is substantial. The evidence converges to indicate that order and organization in the industry are achieved by collusion, cartel, and joint ventures.

The implications of world organization and joint ventures in the industry raise several questions. Two of the questions are: (1) how does the joint ownership of the means of production affect the theoretical

---

[13]Berle, op. cit., p. 144.

analysis usually applied to the petroleum industry, and (2) what, or whose ends are served by this order and organization.

The first question has to do with whether an oligopoly model can explain the behavior of the petroleum industry. Oligopoly models usually postulate a market structure in which (1) a few sellers dominate the market and (2) there is interdependence between the sellers in terms of products and price. Clearly, the international petroleum industry fits both of these criteria. The seven majors dominate the industry and there is interdependence between them.

The market structure may have a formal oligopolistic structure, but it also has an informal structure. This informal structure, which is probably more significant in determining behavior, is typified by joint ownership of the means of production.

One variation of the oligopoly model relies upon a dominant or leading firm. This firm initiates action, usually either an increase or decrease in price, the other firms in the industry respond to this action. Unilateral action, in setting price, may be possible in the international petroleum industry, however, joint ownership probably mitigates a significant amount of such action. In other market related activities, such as expansion of productive facilities, joint ownership almost certainly restrains independent action. The firms in an oligopoly make these decisions independently and with uncertainty as to the reactions of the other firms. However, with joint ownership, even if there is independent decision making, it is probably not under conditions of uncertainty as to the reactions of the other firms. Tacit, if not explicit, agreements

among the members of the industry provide nearly certain responses to changes by the firms.

The idea of a tight versus a loose oligopoly may be useful. The presence of joint ownership of the means of production tends to refute the idea that the international petroleum industry is a loose oligopoly. Joint ventures may serve to reduce the number of effective firms from seven to three or fewer. This would imply that the structure is more closely knit than the number of firms suggests. Indeed the magnitude of joint and interlocking ownership in the industry is such that even a tight oligopolistic structure may not be descriptive. Even a tight oligopoly requires that firms make independent decisions which affect other firms. Reactions to these decisions are more predictable in a tight oligopoly than in a loose one, but they are made independently by a single firm. Market conditions may cause a firm in a tight oligopoly to react counter to the decision of one of the other firms. However, if joint ownership is involved, decisions must be jointly made at the outset, or firms must receive permission not to go along with the decision. This implies that even a tight oligopolistic structure may not adequately explain the behavior of the firms in the international petroleum industry.

On the other hand, the structure of the industry does not fulfill the requirements of a monopoly model. The international majors have some one-owner operations. Also the international minors have increased their share of the international market in the past decade or two. Much of this increase has been accomplished via joint ventures with other minors and with the majors. The influence of the minors, small though it may be,

along with one-owner operations, disqualifies the monopoly model.

In summary, oligopoly models, at the present, do not adequately explain the behavior of the firms in the petroleum industry. The mechanism of joint and interlocking ownership causes problems which have not been incorporated into these models. It may be that these problems cannot be incorporated into the models. On the other hand, the idea of tight oligopoly combined with a monopoly model may be able to adequately explain the problems introduced by joint ownership of the means of production. Joint ownership has brought about a different market structure which will take time to analyze and explain.

Several alternative answers are given in answer to the second question--what or whose ends are served by order and organization? Opinions on the question fall into two basic categories. On one side of the question stand the imperatives of technology; on the other side, pecuniary gain.

Some authorities insist that the imperatives of technology necessitate large, well-organized, economic units. These units must then plan, cooperate, and organize among themselves in order to achieve efficient production. Frank Gardner, international editor for The Oil and Gas Journal, states that ". . . the fact remains that the major internationals still must run the show as far as international supply and demand patterns are concerned. Only they have the flexibility, the capital and the technology to do the job."[14]

---

[14]Frank J. Gardner, "Forecast for the Seventies--Around the World," The Oil and Gas Journal, November 10, 1969, p. 22.

The justification for vertical integration in the petroleum industry rests on technological grounds. Since the technology involved in petroleum production is complex and sophisticated, its efficient use can be achieved only by sound organization. Without this organization, bottlenecks in the production process may occur. If several smaller, less organized units, are responsible for the separate phases of production, a shortage in one phase and a surplus in another may occur. To insure a smooth flow from one phase to the next requires knowledge of the amount supplied at each phase. Fully integrated units are, it is argued, best able to achieve these ends.

Walter S. Hallanan, Chairman of the National Petroleum Council, explains that the integrated oil companies are an attempt to match the separate technological processes of oil production with a business framework:

> . . . it was of vital importance in the public interest for oil companies to integrate their facilities into a smooth, economical and efficient overall organization. Integration is the one essential factor that has made it possible for the oil industry to meet every demand of the American people both in peace and war.[15]

A corollary to the concept of large economic units is that the necessary equipment to carry out petroleum production and to develop new technology is expensive. Only a large company, it is argued, can financially afford to develop and use new technology.

The above arguments have merit. However, some authorities insist that an inherent problem of large units is that they also have the ability

---

[15]Leonard M. Fanning, ed., Our Oil Resources, (New York: McGraw-Hill, 1950), p. 3.

to control production and prices to suit their own purposes. An organization involving these units provides the forum to achieve these purposes. One of the first writers to express this view was Adam Smith. It was his opinion that:

> People of the same trade seldom meet together, even for merriment and diversion, but the conversation ends in a conspiracy against the public, or in some contrivance to raise prices.[16]

Smith's idea, still respected by several authorities, is that vested interest and pecuniary gain are the motives for organization. Using this interpretation, the imperatives of technology are a rationalization to justify pecuniary gain.

Pecuniary gain is certainly one motive for conducting business. Some writers think it is a responsibility of business corporations. For example, Professor Milton Friedman states that:

> Few trends could so thoroughly undermine the very foundations of our free society as the acceptance by corporate officials of a social responsibility other than to make as much money for their stockholders as possible.[17]

Other writers think that money-making may not be a proper endeavor in all situations. For example, David Bazelon states that:

> The idea that money-making--<u>any</u> money-making by <u>anybody</u>--does not by itself properly confront all human problems, is a freshly upsetting notion for our leading groups.[18]

---

[16]Adam Smith, <u>An Inquiry Into the Nature and Causes of the Wealth of Nations</u>, ed. by Edwin Cannan, Vol. I, (4th ed. London: Methuen & Co., Ltd., 1904), p. 130.

[17]Milton Friedman, <u>Capitalism and Freedom</u>, (Chicago: The University of Chicago Press, 1962), p. 133.

[18]David T. Bazelon, <u>The Paper Economy</u>, (New York: Random House, 1959), p. 7.

Two conflicts exist in the question of whose ends are served by order and organization. One conflict is between the imperatives of technology and pecuniary gain. The other conflict is whether pecuniary gain is a proper motive. These conflicting views present a dilemma. One explanation--though not a solution--for this dilemma may be found in the Veblenian dichotomy.

Simply stated, the Veblenian dichotomy postulates that two forces, one dynamic and progressive, the other, static and past-binding, are continually at work in economic relationships. The dynamic force is technology and the static force is ceremony. Technology demands that tools and skills be used for productive, efficient purposes. Ceremony demands that certain traditions be observed. If the traditions run counter to efficiency, one or the other must give way. If traditions give way, the result will be more efficient production, but, if the technology is sabotaged, the result will be counter-productive.

Applied to the dilemma at hand, the dichotomy would effect the production of oil on one side and money-making on the other. The efficient production of oil may be achieved by applying technical skill and knowledge--from several areas--to this task. Efficient money-making may be achieved in several ways. History records numerous instances in which money-making and efficient production were tangentially related, if at all.[19] If efficient production and money-making are at cross-purposes the dilemma emerges. One question then becomes: is the international

---

[19]For example, the South Sea Bubble, the Trusts of the early 1900's, watered stock, and over drilling in an oil field, to name a few.

petroleum industry engaged in efficient production, or is it engaged in money-making, or both? Or, stated another way, do order and organization serve the best interest of the consumer, or the best interest of the industry, or both? If pecuniary gain stands in the way of that which is technologically possible, the best interest of the consumer is not served.

Pecuniary gain, a traditional motive of business enterprise, may retard the technologically possible in several ways. One way is to restrict production and therefore raise price. Another way is to restrict entry by holding patents. This also serves to reduce production and increase price. Yet another way is to order markets and organize trade so that price competition is reduced and entry is restricted. Economic theory explains that in the absence of sufficient competition, businessmen will attempt all of these.

Order and organization may be used to reduce competitive forces. It may also be used to efficiently produce oil. If the tradition of money-making, at work in orderly conditions, typified by a lack of competitive forces, prevails over efficient production, the best interest of the consumer is not served. Pecuniary gain--not efficient production--becomes the motive for order and organization. On the other hand, if money-making and efficient production are not at cross-purposes, both the best interests of the consumer and the industry may be served by orderly markets. The answer to the question of whose interests are best served by order and organization requires an investigation of several financial and technological areas. Among these areas are: prices, profits, and technological supply versus market supply.

CHAPTER VI

SUMMARY AND CONCLUSIONS

During the last fifteen to twenty years joint ventures have been emerging as a form of business organization. Neither the magnitude, nor participation patterns of this form of organization have been examined in a particular industry. Areas directly and tangentially related to joint ventures have been studied.

One area that has received attention is the legality of joint ventures. Several studies have been undertaken in this area. The focus of these studies is the relationship of joint ventures to the U.S. antitrust laws. However, these studies have not resulted in a conclusive opinion on the legality of joint ventures. For example, Michael Bergman argues that in certain cases, joint ventures are illegal, but that these cases are difficult to define. Bergman is basically of the opinion that joint ventures are legal and should be encouraged. Paul R. Dixon, former chairman of the Federal Trade Commission, maintains that joint ventures, both foreign and domestic, among large companies are illegal under the antitrust laws. He is basically of the opinion that joint ventures restrict competition and restrain trade.

Another area that has received attention is the multinational corporation. Multinational corporations are tangentially related to

joint ventures in that it is primarily multinations which participate in joint ventures.

Studies indicate that during the last few decades, multinational corporations have progressed in the direction of achieving a new form of world government organized to move people, capital, and goods across national borders in an orderly fashion. As a result, the traditional role of the nation in determining the use of its resources has deteriorated.

Petroleum corporations are prominent multinational corporations. Petroleum corporations are also prominent participants in joint ventures.

An empirical examination focusing specifically on the magnitude of joint ventures in the international petroleum industry has not--to this writer's knowledge--been undertaken. Nor has a study on the participation patterns and degree of joint ownership of the means of production in the petroleum industry been made. The task undertaken in this study is to examine these facets of joint ventures in the international petroleum industry.

Data for this study are from three primary sources: The Oil and Gas Journal, World Oil, and The International Petroleum Register 1966-67. Each issue of The Oil and Gas Journal and World Oil was examined between the years 1957-1971, for announcements of joint ventures. These announcements were arranged by participant and geographic area. Six groups of participants are delineated: international majors, international minors, local private capital, government-owned companies (both local and non-host), and "others." Ten geographic areas are defined. These areas

include most of the world. Two areas excluded from the study are the continental United States and the Communist bloc countries.

In the ten areas there are over 700 exploration and drilling joint ventures; 449 of these are analyzed in this study. A relatively even distribution of these joint ventures exists in the ten areas. Four joint activities (exploration, concessions, drilling, and discoveries) take place in these joint ventures. Joint activities number over 2,000 in the ten areas.

Of the six participating groups, the international majors and the international minors, are the most prominent. The minors participate in 269 joint ventures in the ten areas. At least one minor participates in joint ventures in each of the ten areas. The majors participate in 224 joint ventures in the ten areas; they participate in each of the ten areas.

The majors and minors also control more joint ventures than the other groups. The majors control 194 joint ventures in the ten areas. They control a majority of the joint ventures in six of the ten areas. The minors control 144 joint ventures in the ten areas and they control a majority of the joint ventures in four areas.

Various participant combinations among and between the six groups may be discerned. However, two distinct combination patterns exist. One pattern is joint ventures among the international majors. The majors seem to prefer to establish joint subsidiaries rather than contractual agreements. The number of majors involved in a joint venture ranges from two to seven; the average number of majors involved in a joint venture is

four (this is for the combined data of exploration, and drilling, production, pipelines, and refining). Joint ventures among the majors result in over 900 joint interlocking ownership arrangements among the majors in the ten areas.

Several sets of consistent partnerships involving the majors emerge from the data. Texaco-Standard of California, Standard of New Jersey-Shell, Shell-BP, and Standard of New Jersey-Mobil are the more prominent partnerships in the ten areas.

The intensity of joint ventures and joint ownership arrangements among the majors is such that they are not autonomous units, but rather are legally bound to act as one unit. This means that a decision on the part of these companies can bring over $80 billion in assets to procure the implementation of that decision.

The majors are the primary force in one of the world's most necessary energy resources. They control 77 percent of the oil production, 60 percent of the pipeline mileage, and 61 percent of the refining capacity outside the United States and the Communist bloc countries.

On the periphery of the international oil industry are the international minors and government-owned companies. These two groups are interlocked among themselves, as well as with the international majors. The minors control 19 percent of the oil production, 32 percent of the pipeline mileage, and 9 percent of the refining capacity outside the United States and the Communist bloc countries.

These companies establish joint ventures primarily on the basis of contractual agreements. An average of three minors are involved in

those joint ventures in which minors participate. Joint ventures among the minors result in over 1,000 joint interlocking ownership arrangements among members of the group. However, the minors are not as cohesive a group as the majors.

Collectively, the international majors and the international minors control 96 percent of the oil production, 92 percent of the pipeline mileage, and nearly 71 percent of the refining capacity in the ten areas. These two groups share several joint ventures in each of the four phases of oil production. These joint ventures result in over 3,200 interlocking ownership arrangements among these two groups in the ten areas.

Combining the joint venture data in the four phases of oil production, exploration and drilling, production, pipelines, and refining, intensifies the relationships among the participants. These data indicate that there are over 3.5 million square miles of jointly owned concessions in the ten areas. Further, three-fourths of the crude production, 60 percent of the pipeline mileage, and 50 percent of the refining capacity in the ten areas is jointly owned. Given the magnitude of joint ownership of these productive means, it may be concluded that the means of production in the international petroleum industry are substantially jointly owned.

Joint ownership of the means of production, eventuated through joint ventures, serve as one mechanism to bring order and organization into the international petroleum industry. The nature of joint ventures demands cooperation among the participants. Cooperation, in turn, demands

planning and a sophisticated communication network. Joint ventures provide both of these prerequisites to order and organization.

Cooperation, planning, order, and organization may work to the benefit of the consumer; however, they may also work to the vested interest in pecuniary gain of the participants in the oil industry. Supplying answers to these questions would entail examining several aspects of the oil industry. Some of these aspects might be: is the most efficient technology being used? Is the industry operating at full capacity? Is the supply of oil artificially restricted? What are the profits of oil companies? What is the cost of production of a barrel of oil and what is its price?

In addition to these aspects of the oil industry, more research on phenomena directly and indirectly related to joint ventures would aid in understanding the international oil industry. Some of the areas suggested by the analysis presented in this study are: the stock ownership of the principal international oil companies, the magnitude of joint ventures in phases of oil production not included in this study--ocean tankers, marketing facilities, petrochemical processing, and a study of joint ventures in the continental United States.

APPENDIX

TABLE A1

LEGAL TITLES, ACRONYMS, HOME COUNTRY, AND SALES OF SELECTED COMPANIES EXAMINED IN THE STUDY

Legal Title	Acronym	Country	Sales, 1971 (Millions of dollars)
Standard Oil Company (New Jersey)	Jersey	U.S.	18,701
Royal Dutch/Shell Group	Shell	Britain/Netherlands	12,734
Mobil Oil Corporation	Mobil	U.S.	8,243
Texaco, Incorporated	Texaco	U.S.	7,529
Gulf Oil Corporation	Gulf	U.S.	5,940
British Petroleum Company, Ltd.	BP	Britain	5,191
Standard Oil Company of California	SOCAL	U.S.	5,143
Standard Oil Company (Indiana)	SOI	U.S.	4,054
Badische Anilin-und Sodafabrik	BASF	Germany	3,210
Atlantic Richfield Company	ARCO	U.S.	3,135
Continental Oil Company	Conoco	U.S.	3,051
Tenneco, Incorporated	Tenneco	U.S.	2,841
Occidental Petroleum Corporation	OXY	U.S.	2,400
Compagnie Francaise des Petroles	CFP	France	2,395
Phillips Petroleum Company	Phillips	U.S.	2,363
Ente Nazionale Idrocarburi	ENI	Italy	2,172
Union Oil Company of California	Union	U.S.	1,981
Sun Oil Company	Sun	U.S.	1,939

(continued)

TABLE A1 (Continued)

Legal Title	Acronym	Country	Sales, 1971 (Millions of dollars)
Cities Service Company	Cities	U.S.	1,810
Ashland Oil Incorporated	Ashland	U.S.	1,614
Standard Oil Company (Ohio)	SOHIO	U.S.	1,394
Petrofina S.A.	Petrofina	Belgium	1,350
Amerada-Hess Corporation	Amerada	U.S.	1,349
Getty Oil Company	Getty	U.S.	1,343
The Signal Companies Inc.	Signal	U.S.	1,281
Marathon Oil Company	Marathon	U.S.	1,183

Source: Compiled from data in USA Oil Directory 1972; Eastern Hemisphere Petroleum Directory 1971-72; and Fortune, May and August, 1972.

TABLE A2

JOINT VENTURES IN EXPLORATION AND DRILLING,
BY KIND OF ACTIVITY, AFRICA, 1957-1971

Venture Number	Participants	Ownership, Percent	Kind of Activity	Area
1	SONATARCH INC.	35	Concession,	Algeria
	Algeria government co.		13,437 sq. mi.	
	MOBIL OIL NORD-AFRICAINE	25	Drilling,	
	Mobil Oil Corp.		Discovery	
	SOCIETE PETROLIERE FRANCAISE EN ALGERIE ..	35		
	OTHERS	5		
2	ALGERIAN GEOPHYSICAL RESEARCH & STUDY CO..	51	Exploration	Algeria
	Sonatarch Inc.			
	Algerian government co.			
	GLOBE UNIVERSAL SCIENCE INC.	49		
3	SOCIETE NATIONALE DE RECHERCHE ET D'EXPLOITATION DES PETROLES IN ALGERIE (S.N. REPAL)	50	Concession,	Algeria
	Algerian government (40.51)		1,699 sq. mi.	
	Elf/Erap (40.51)		Drilling	
	French government agency			
	Others (18.98)			
	COMPAGNIE FRANCAISE DES PETROLES (CFP) ...	50		
	French government (35)			
	Others (65)			
4	COMPAGNIE DES PETROLES D'ALGERIE	100	Concession,	Algeria

(continued)

TABLE A2 (Continued)

Venture Number	Participants	Ownership, Percent	Kind of Activity	Area
	Royal Dutch/Shell (65.0) Elf/Erap (24.36) French government agency Others (10.64)		4,525 sq. mi. Drilling, Discovery	Algeria
5	COMPAGNIE DE RECHERCHES ET D'EXPLOITATION DE PETROLE AU SAHARA ..... Royal Dutch/Shell Group (35) Elf/Erap (30) French government agency Gestions de Participations de la Regie Autonome de Petroles (25.5) Elf/Erap (Majority interest) French government agency Societe Nationale de Recherche et d'Exploitation des Petroles in Algerie (S.N. Repal) (4.87) Algerian government (40.51) Elf/Erap (40.51) French government agency Others (18.98) Others (4.63)	100	Concession, Drilling, Discovery, 3 producing fields	Algeria
6	GEWERKSCHAFT ELWERATH ..... Deutsche Shell A. G. (50) Royal Dutch/Shell Group	___[a]	Concession 1,197 sq. mi.	Algeria

(continued)

TABLE A2 (Continued)

Venture Number	Participants	Ownership, Percent	Kind of Activity	Area
	Esso A.G. (50) Standard Oil Company (New Jersey) SOCIETE DE RECHERCHES ET D'EXPLOITATION DE PETROLE (EURAFREP) ..... French government agency SOCIETE DE PARTICIPATIONS PETROLIERES (PETROPAR) ..... Elf/Erap (86.66) French government agency Others (13.34)	___ a ___ a		
7	BADISCHE ANILIN UND SODAFABRIK (BASF) ... Private German capital SOCIETE DE RECHERCHES ET D'EXPLOITATION DE PETROLE (EURAFREP) ..... French government agency SOCIETE DE PARTICIPATIONS PETROLIERES (PETROPAR) ..... Elf/Erap (86.66) French government agency Others (13.34)	___ a ___ a ___ a	Exploration, Concession, 772 sq. mi. 1 producing field	Algeria
8	ESSO STANDARD EASTERN ..... Standard Oil Company (New Jersey) SOCIETE DE PARTICIPATIONS PETROLIERES (PETROPAR)	50 15	Exploration, 7,772 sq. mi. Concession 7,940 sq. mi.	Algeria

(continued)

TABLE A2 (Continued)

Venture Number	Participants	Ownership, Percent	Kind of Activity	Area
	Elf/Erap (86.66)			
	French government agency			
	Others (13.34)			
	CAMPAGNIE DES PETROLES EN ALGERIE	35		
	Compagnie Francaise des Petroles (CFP)			
	French government (35)			
	Others (65)			
9	PHILLIPS PETROLEUM CO.	[a]	Concession,	Algeria
	COMPAGNIE DES PETROLES FRANCE AFRIQUE ...	[a]	2,240 sq. mi.	
	Elf/Erap (80.91)		1 producing	
	French government agency		field	
	Others (19.09)			
	COMPAGNIE FRANCO-AFRICAINE DE RECHERCHES PETROLIERES (FRANCAREP)	[a]		
10	PHILLIPS PETROLEUM CO.	25.0	Exploration,	Algeria
	COMPAGNIE DES PETROLES FRANCE AFRIQUE ...	37.5	Concession,	
	Elf/Erap (80.91)		2,930 sq. mi.	
	French government agency		Drilling,	
	Others (19.09)		Discovery,	
	OMNIEM DE RECHERCHES ET EXPLOITATIONS PETROLIERES (OMNIREX)	37.5	2 producing fields	
	Phillips Petroleum Co. (50)			
	Omnium Francaise de Petroleus (50)			
	Compagnie Francaise des Petroles			

(continued)

TABLE A2 (Continued)

Venture Number	Participants	Ownership, Percent	Kind of Activity	Area
	(CFP) (92.9) French government (35) Others (65) Others (7.1)			
11	SINCLAIR MEDITERRANEAN PETROLEUM ..... Atlantic Richfield Co. NEWMONT MINING CORP. ..... VEEDOL OIL ..... Tidewater Oil Corp. Misson Corp. Getty Oil Co. (76.70) SOCIETE ANONYME FRANCAISE DE RECHERCHES ET D'EXPLOITATION DE PETROLE (SAFREP) ... Elf/Erap French government agency SOCIETE DE RECHERCHES ET D'EXPLOITATION DE PETROLE (EURAFREP) ..... French government agency	28.0 7.5 11.5 35.0 18.0	Exploration, Concession, 580 sq. mi. Drilling, Discovery, 1 producing field	Algeria
12	FRANCO DELHI S.A. ..... Canadian Delhi Oil, Ltd. Standard Oil Company (Ohio) SOCIETE DE PARTICIPATIONS PETROLIERES (PETROPAR) ..... Elf/Erap (86.66) French government agency	50 25	Concession 1,583 sq. mi.	Algeria

(continued)

TABLE A2 (Continued)

Venture Number	Participants	Ownership, Percent	Kind of Activity	Area
	Others (13.34)			
	COMPAGNIE FRANCO-AFRICAINE DE RECHERCHES PETROLIERES (FRANCAREP)	25		
13	CITIES SERVICE CO.	49	Concession, 1,580 sq. mi.	Algeria
	COMPAGNIE FRANCO-AFRICAINE DE RECHERCHES PETROLIERES (FRANCAREP)	26	Drilling, Discovery	
	SOCIETE DE PROSPECTION ET EXPLOITATIONS PETROLIERES EN ALSACE (PREPA)	25		
	Elf/Erap			
	French government agency			
14	SOCIETE DES PETROLES DE VALENCE	100	Concession 309 sq. mi.	Algeria
	British Petroleum Co., Ltd. (50)			
	Elf/Erap (17)			
	French government agency			
	Others (33)			
15	PURE ITALIA, INC.	65	Concession, 18,750 sq. mi.	Algeria
	Pure Oil Co.			
	Union Oil Company of California		Drilling, Discovery	
	WESTSTATES PETROLEUM CO.	[a]		
	AUSONIA MINERARIA (AMI)	[a]		
16	SOCIETE DE RECHERCHES ET D'EXPLOITATION DE PETROLE (EURAFREP)	10	Concession,	Algeria

(continued)

TABLE A2 (Continued)

Venture Number	Participants	Ownership, Percent	Kind of Activity	Area
	French government agency		925 sq. mi.	
	COMPAGNIE DE PARTICIPATIONS DES RECHERCHES ET D'EXPLOITATION PETROLIERES (COPAREX)	25	Concession, 1,467 sq. mi. Drilling, Discovery	
	COMPAGNIE FRANCO-AFRICAINE DE RECHERCHES PETROLIERES (FRANCAREP)	14		
	SOCIETE NATIONALE DES PETROLES D'AQUITAINE (SNPA)	51		
	Elf/Erap (51)			
	French government agency			
	Compagnie Francaise des Petroles (7.2)			
	French government (35)			
	Others (65)			
	Others (41.8)			
17	PAN AMERICAN PETROLEUM CO.	[a]	Concession 1,040 sq. mi.	Algeria
	Standard Oil Company (Indiana)			
	SOCIETE DE PARTICIPATIONS PETROLIERES (PETROPAR)	[a]		
	Elf/Erap (86.66)			
	French government agency			
	Others (13.34)			
	COMPAGNIE FRANCO-INDUSTRIELLE	[a]		
18	SHELL OIL COMPANY (CAMEROON)	80	Exploration, Concession	Cameroon (offshore)
	Royal Dutch/Shell Group			

(continued)

TABLE A2 (Continued)

Venture Number	Participants	Ownership, Percent	Kind of Activity	Area
	ELF-SOCIETE DE RECHERCHES ET D'EXPLOITATION DES PETROLES AU CAMEROON (SEREPCA) .	20		
	French government			
19	MOBIL INTERNATIONAL, INC.	40	Concession 579 sq. mi.	Cameroon (offshore)
	Mobil Oil Corp.			
	COMPAGNIE ESPANDA DE PETROLES S.A.(CEPSA)	30		
	Spanish government			
	COMPAGNIE IBERICADE PROSPECCIONES S.A. (CIPSA)	30		
	Private Spanish capital			
20	SOCIETE DE PARTICIPATIONS PETROLIERES (PETROPAR)	50	Concession 31,500 sq. mi.	Chad
	Elf/Erap (86.66)			
	French government agency			
	Others (13.44)			
	SOCIETE NATIONALE DES PETROLES D'AQUITAINE (SNPA)	50		
	Elf/Erap (51)			
	French government agency			
	Compagnie Francaise des Petroles (CFP) (7.2)			
	French government (35)			
	Others (65)			
	Others (41.8)			

(continued)

TABLE A2 (Continued)

Venture Number	Participants	Ownership, Percent	Kind of Activity	Area
21	SHELL OIL CO.	50	Concession 1,544 sq. mi.	Dahomey (offshore)
	Royal Dutch/Shell Group			
	DAHOMEY GOVERNMENT	50		
22	EL-NASR OIL FIELDS, LTD.	100	Concession, 120 sq. mi. 2 producing fields	Egypt
	British Petroleum Co., Ltd. (31)			
	Royal Dutch/Shell Group (31)			
	Egyptian government (38)			
23	EL-NASR OIL FIELDS, LTD.	50	Concession, 3 producing fields	Egypt
	British Petroleum Co., Ltd. (31)			
	Royal Dutch/Shell Group (31)			
	Egyptian government (38)			
	MOBIL OIL EGYPT (S.A.A.)	50		
	Mobil Oil Corp.			
24	AMOCO UAR OIL CO.	50	Concession, 37,400 sq. mi. Drilling, Discovery	Egypt
	Amoco International Oil Co.			
	Standard Oil Company (Indiana)			
	EGYPTIAN GENERAL PETROLEUM CORP.	50		
	Egyptian government co.			
25	GULF OF SUEZ PETROLEUM CO. (GUPCO)	100	Concession, Drilling, Discovery, 2 producing fields	Egypt
	Amoco UAR Oil Co. (50)			
	Amoco International Oil Co.			
	Standard Oil Company (Indiana)			
	Egyptian General Petroleum Corp. (50)			

(continued)

TABLE A2 (Continued)

Venture Number	Participants	Ownership, Percent	Kind of Activity	Area
	Egyptian government co.			
26	FAIYUM PETROLEUM CO.	100	Concession, Drilling, Discovery, 1 producing field	Egypt
	Amoco UAR Oil Co. (50)			
	Amoco International Oil Co.			
	Standard Oil Company (Indiana)			
	Egyptian General Petroleum Corp. (50)			
	Egyptian government co.			
27	PHILLIPS PETROLEUM CO.	50	Concession, 37,400 sq. mi. Drilling, Discovery	Egypt
	EGYPTIAN GENERAL PETROLEUM CORP.	50		
	Egyptian government co.			
28	WESTERN DESERT OPERATING PETROLEUM CO. ..	100	Concession, 27,773 sq. mi. Drilling, Discovery, 3 producing fields	Egypt
	Phillips Petroleum Co. (50)			
	Egyptian General Petroleum Corp. (50)			
	Egyptian government co.			
29	INTERNATIONAL EGYPTIAN OIL CO.	50	Concession, 99 sq. mi. Drilling, Discovery, 1 producing	Egypt
	Agip S.p.A. (99.81)			
	Ente Nazionale Idrocarburi (ENI) (84)			
	Italian government co.			
	Others (16)			

(continued)

TABLE A2 (Continued)

Venture Number	Participants	Ownership, Percent	Kind of Activity	Area
	EGYPTIAN GENERAL PETROLEUM CORP.	50		
	Egyptian government co.			
30	COMPAGNIE ORIENTALE DES PETROLES D'EGYPT	51	Exploration, Concession, Drilling, Discovery, 4 producing fields	Egypt
	International Egyptian Oil Co. (50)			
	Agip S.p.A. (99.81)			
	Ente Nazionale Idrocarburi (ENI) (84)			
	Italian government co.			
	Others (16)			
	Egyptian General Petroleum Corp. (50)			
	Egyptian government co.			
	ENTE NAZIONALE IDROCARBURI (ENI)	49		
	Italian government co.			
31	EGYPTIAN OCEAN OIL CO.	100	Exploration	Egypt
	Egyptian General Petroleum Corp. (50)			
	Egyptian government co.			
	North Sumatra Oil Development Corp. (25)			
	Overseas Economic Cooperation Fund (37.5)			
	Mitsui & Co. (21.6)			
	Mitsubishi Heavy Industries, Ltd. (14.0)			
	Others (26.9)			
	Mitsui & Co. (25)			

(continued)

TABLE A2 (Continued)

Venture Number	Participants	Ownership, Percent	Kind of Activity	Area
32	SOUTHEAST ASIA OIL & GAS CO.	50	Exploration,	Egypt
	EGYPTIAN GENERAL PETROLEUM CORP.	50	Concession	
	Egyptian government co.		12,200 sq. mi.	
33	SOCIETE ELF DES PETROLES D'AFRIQUE EQUATORIALE FRANCAISE (SPAEF)	100	Exploration,	Gabon
	Elf/Erap (52.831)		Concession,	
	French government agency		72,328 sq. mi.	
	Caisse Centrale de Cooperation		Drilling,	
	Economique (14.54)		Discovery,	
	Others (32.629)		9 producing fields	
34	SOCIETE ELF DES PETROLES D'AFRIQUE EQUATORIALE FRANCAISE (SPAEF)	50	Exploration,	Gabon
	Elf/Erap (52.831)		Concession,	
	French government agency		4,985 sq. mi	
	Caisse Centrale de Cooperation		Drilling,	
	Economique (14.54)		Discovery,	
	Others (32.629)		2 producing	
	MOBIL OIL FRANCAISE	25	fields	
	Mobil Oil Corp.			
	MOBIL EXPLORATION WEST AFRICA, INC.	25		
	Mobil Oil Corp.			

(continued)

TABLE A2 (Continued)

Venture Number	Participants	Ownership, Percent	Kind of Activity	Area
35	SOCIETE ELF DES PETROLES D'AFRIQUE EQUATORIALE FRANCAISE (SPAEF)	50	Exploration, Concession, 4,930 sq. mi. Drilling, Discovery, 2 producing fields	Gabon
	Elf/Erap (52.831)			
	French government agency			
	Caisse Centrale de Cooperation Economique (14.54)			
	Others (32.629)			
	SHELL GABON	50		
	Royal Dutch/Shell Group			
36	SOCIETE ELF DES PETROLES D'AFRIQUE EQUATORIALE FRANCAISE (SPAEF)	20	Exploration, Concession 734 sq. mi.	Gabon
	Elf/Erap (52.831)			
	French government agency			
	Caisse Centrale de Cooperation Economique (14.54)			
	Others (32.629)			
	SHELL GABON	80		
	Royal Dutch/Shell Group			
37	SHELL GABON	50	Exploration, Concession, 1,544 sq. mi. Drilling	Gabon
	Royal Dutch/Shell Group			
	GULF OIL COMPANY OF GABON	50		
	Gulf Oil Corp.			

(continued

TABLE A2 (Continued)

Venture Number	Participants	Ownership, Percent	Kind of Activity	Area
38	SHELL GABON	50	Concession, Drilling, Discovery	Gabon (offshore)
	Royal Dutch/Shell Group			
	GULF OIL COMPANY OF GABON	30		
	Gulf Oil Corp.			
	SOCIETE ELF DES PETROLES D'AFRIQUE EQUATORIALE FRANCAISE (ELF/SPAEF)	20		
	Elf/Erap (52.831)			
	French government agency			
	Caisse Centrale de Cooperation Economique (14.54)			
	Others (32.629)			
39	TEXACO OVERSEAS PETROLEUM, INC.	50	Concession 960 sq. mi.	Gabon
	Texaco, Inc.			
	CHEVRON OVERSEAS PETROLEUM, INC.	50		
	Standard Oil Company of California			
40	AGIP S.P.A.	50	Concession 1,318 sq. mi.	Gabon
	Ente Nazionale Idrocarburi (ENI) (84)			
	Italian government co.			
	Others (16)			
	SOCIETE ELF DES PETROLES D'AFRIQUE EQUATORIALE FRANCAISE (ELF/SPAEF)	50		
	Elf/Erap (52.831)			
	French government agency			
	Caisse Centrale de Cooperation			

(continued)

TABLE A2 (Continued)

Venture Number	Participants	Ownership, Percent	Kind of Activity	Area
	Economique (14.54) Others (32.629)			
41	WESTERN GEOPHYSICAL CO.	100	Exploration	Gambia
	BP Petroleum, Ltd. (50) British Petroleum Co., Ltd. Elf/Erap (50) French government agency			
42	SIGNAL OIL & GAS CO.	33.3[b]	Concession	Ghana
	The Signal Companies, Inc.		1,600 sq. mi.	(offshore)
	OCCIDENTAL PETROLEUM CORP.	33.3		
	AMERICAN INTERNATIONAL OIL CO.	33.3		
	Standard Oil Company (Indiana)			
43	SIGNAL OIL & GAS CO.	25	Exploration,	Ghana
	The Signal Companies, Inc.		Concession,	(offshore)
	OCCIDENTAL PETROLEUM CORP.	25	719 sq. mi.	
	AMERICAN INTERNATIONAL OIL CO.	25	Drilling	
	Standard Oil Company (Indiana)			
	CHEVRON OIL COMPANY (GHANA)	25		
	Standard Oil Company of California			
44	FRONTIER PETROLEUM CO., INC.	___[a]	Concession	Ghana
	ISRAEL NATIONAL OIL CO.	___[a]		(offshore)
	Isralia government			
	MAYFLOWER OIL CO.	___[a]		

TABLE A2 (Continued)

Venture Number	Participants	Ownership, Percent	Kind of Activity	Area
45	UNION CARBIDE PETROLEUM CORP.	32.5	Exploration	Ghana (offshore)
	Ashland Oil, Inc.			
	FRONTIER PETROLEUM CO., INC.	32.5		
	AMERADA PETROLEUM CORP.	35.0		
	Amerada-Hess Corp.			
46	MARATHON INTERNATIONAL OIL CO.	39	Exploration, Concession, 3,750 sq. mi. Drilling	Ivory Coast
	Marathon Oil Co.			
	SOCIETE AFRICAINE DES PETROLES	51		
	Elf/Erap (71.4)			
	French government agency			
	Others (28.6)			
	BENEDUM-TREES OIL CO.	10		
47	SOCIETE AFRICAINE DES PETROLES	100	Concession 2,233 sq. mi.	Ivory Coast
	Elf/Erap (71.4)			
	French government agency			
	Others (28.6)			
48	ESSO EXPLORATION, INC.	25	Concession	Ivory Coast
	Standard Oil Company (New Jersey)			
	SHELL OIL CO.	25		
	Royal Dutch/Shell Group			
	ELF/ERAP	50		
	French government agency			

(continued)

TABLE A2 (Continued)

Venture Number	Participants	Ownership, Percent	Kind of Activity	Area
49	UNION CARBIDE PETROLEUM CORP.	50	Concession	Liberia
	Ashland Oil, Inc.			
	AMOCO INTERNATIONAL OIL CO.	50		
	Standard Oil Company (Indiana)			
50	ROYAL RESOURCES CORP.	65	Concession 1,350 sq. mi.	Liberia
	Colorado Corp.			
	FRONTIER LIBERIA OIL CO.	35		
	Frontier Oil Co.			
51	OASIS OIL COMPANY OF LIBYA	100	Concession, 96,875 sq. mi.	Libya
	Marathon Oil Company of Libya (33.3)		Drilling, Discovery, 7 producing fields	
	Marathon Oil Co.			
	Continental Oil Company of Libya (33.3)			
	Continental Oil Co.			
	Amerada Petroleum Company of Libya (16.7)			
	Amerada-Hess Corp.			
	Libya Shell N.V. (16.7)			
	Royal Dutch/Shell Group			
52	ESSO SIRTE, INC.	50.0	Concession, 1,147 sq. mi.	Libya
	Standard Oil Company (New Jersey)			
	LIBYAN AMERICAN OIL CO.	25.5	Drilling, Discovery, 2 producing	
	Sinclair International Oil Co.			
	Atlantic Richfield Co.			

(continued)

TABLE A2 (Continued)

Venture Number	Participants	Ownership, Percent	Kind of Activity	Area
	W.R. GRACE & CO.	24.5	fields	
53	ESSO STANDARD LIBYA, INC.	50	Concession, Drilling, Discovery	Libya
	Standard Oil Company (New Jersey)			
	GULF OIL COMPANY OF LIBYA, INC.	50		
	Gulf Oil Corp.			
54	ESSO STANDARD LIBYA, INC.	___[a]	Exploration, Concession, 2 producing fields	Libya
	Standard Oil Company (New Jersey)			
	COMPAGNIE DES PETROLES TOTAL (LIBYE)	___[a]		
	Compagnie Francaise des Petroles (CFP) (99.9)			
	French government (35)			
	Others (65)			
55	ELWERATH OIL COMPANY OF LIBYA	50	Concession, Drilling, Discovery	Libya
	Gewerkschaft Elwerath			
	Deutsche Shell A.G. (50)			
	Royal Dutch/Shell Group			
	Esso A.G. (50)			
	Standard Oil Company (New Jersey)			
	BADISCHE ANILIN UND SODAFABRIK (BASF) ...	50		
	Private German capital			
56	MOBIL OIL LIBYA, LTD.	65	Concession, 21,090 sq. mi.	Libya
	Mobil Oil Corp.			

(continued)

TABLE A2 (Continued)

Venture Number	Participants	Ownership, Percent	Kind of Activity	Area
	GELSENKIRCHENER BERGWERKS A.G.	35	Drilling, Discovery, 7 producing fields	
	Gelsenberg Benzin			
	Private German capital			
57	AMERICAN OVERSEAS PETROLEUM, LTD	100	Concession, 15,615 sq. mi.	Libya
	California Texas Oil Co., Ltd.			
	Standard Oil Company of California (50)		Drilling, Discovery, 4 producing fields	
	Texaco, Inc. (50)			
58	AMERICAN OVERSEAS PETROLEUM, LTD.	75	Concession, Drilling, Discovery	Libya
	California Texas Oil Co.			
	Standard Oil Company of California (50)			
	Texaco, Inc. (50)			
	LIBYA CLARK OIL CO.	25		
	Clark Oil Co.			
59	BRITISH PETROLEUM CO., LTD.	50	Concession, Drilling, Discovery, 1 producing field	Libya
	NELSON BUNKER HUNT	50		
	Hunt Oil Co.			

(continued)

TABLE A2 (Continued)

Venture Number	Participants	Ownership, Percent	Kind of Activity	Area
60	AMOCO LIBYA OIL CO. ..... Standard Oil Co. Standard Oil Company (Indiana) PHILLIPS PETROLEUM CO.	___[a] ___[a]	Concession, 7,190 sq. mi. 2 producing fields	Libya
61	PHILLIPS PETROLEUM CO. ..... LIBYAN ATLANTIC OIL CO. ..... Atlantic Richfield Co.	___[a] ___[a]	Exploration, Concession, 10,937 sq. mi. Drilling, Discovery	Libya (offshore) Gulf of Sirte
62	PURE ITALIA, INC. ..... Pure Oil Co. Union Oil Company of California WESTATES-ITALIO CO. ..... Westates Petroleum Co. AUSONIA MINERARIA (AMI) ..... Edison S.p.A. DEUTSCHE TEXACO A.G. ..... Texaco, Inc. (96.8) SOCIETE NATIONALE DES PETROLES D'AQUITAINE (SNPA) ..... Elf/Erap (51) French government agency Compagnie Francaise des Petroles (CFP) (7.2)	14.4 15.0 30.6 20.0 20.0	Concession 11,719 sq. mi.	Libya

(continued)

TABLE A2 (Continued)

Venture Number	Participants	Ownership, Percent	Kind of Activity	Area
	French government (35) Others (65) Others (41.8)			
63	AMERICAN MINING & EXPLORATION CO. ..... PANTEPEC PETROLEUM, LTD. ..... Pantepec International, Inc.	80 20	Exploration, Concession 1,015 sq. mi.	Libya (offshore)
64	CIRCLE OIL CO. ..... Ashland Oil, Inc. (75) Whitestone Petroleum Co. (25)	100	Exploration, Concession, 4,781 sq. mi. Drilling	Libya
65	ASHLAND OIL, INC. ..... LIBYAN GENERAL PETROLEUM CO. ..... Libyan government	70 30	Exploration, Concession, 2,813 sq. mi. Drilling	Libya
66	HISPANOIL DE PETROLEOS, S.S. ..... Compangine Espanola De Petroleos, S.A. (CEPSA) Spanish government AQUITAINE-LIBYE ..... Societe Nationale Des Petroleos d'Aquitaine (SNPA) Elf/Erap (51) French government agency	42 42	Concession, 1 producing field	Libya

(continued)

TABLE A2 (Continued)

Venture Number	Participants	Ownership, Percent	Kind of Activity	Area
	Compagnie Francaise des Petroles (CFP) (7.2)			
	French government (35)			
	Others (65)			
	Others (41.8)			
	MURCO LIBYA OIL CO.	16		
	Murphy Oil Corp.			
67	LIBYAN GENERAL PETROLEUM CO.	50	Concession, 11,525 sq. mi.	Libya (offshore)
	Libyan government			
	ELF/ERAP	25	Drilling	
	French government agency			
	SOCIETE NATIONALE DES PETROLEOS D'AQUITAINE (SNPA)	25		
	Elf/Erap (51)			
	French government agency			
	Compagnie Francaise des Petroles (CFP) (7.2)			
	French government (35)			
	Others (65)			
	Others (41.8)			
68	CONTINENTAL OIL COMPANY OF MAURETANIA..	25	Exploration, Concession	Mauretania
	Continental Oil Co.			
	MAURETANIA CITIES SERVICE	24	5,312 sq. mi.	
	Cities Service Co.			

(continued)

TABLE A2 (Continued)

Venture Number	Participants	Ownership, Percent	Kind of Activity	Area
	SOCIETE DE PARTICIPATIONS PETROLIERES (PETROPAR)	51		
	Elf/Erap (86.66)			
	French government agency			
	Others (13.44)			
69	CONTINENTAL OIL COMPANY OF MAURETANIA..	24	Exploration, Concession	Mauretania
	Continental Oil Co.			
	MAURETANIA CITIES SERVICE	25	5,312 sq. mi.	
	Cities Service Co.			
	SOCIETE AFRICAINE DES PETROLES (SAP)...	26		
	Elf/Erap (71.4)			
	French government agency			
	Others (28.6)			
	COMPAGNIE DE PARTICIPATIONS DES RECHERCHES ET D'EXPLOITATION PETROLIERES (COPAREX)	25		
70	CONTINENTAL OIL CO.	24	Concession	Mauretania
	CITIES SERVICE CO.	25	11,562 sq. mi.	
	SOCIETE AFRICAINE DES PETROLES	26		
	Elf/Erap (71.4)			
	French government agency			
	Others (28.6)			
	SOCIETE DE RECHERCHES ET D'EXPLOITATION DE PETROLE (Eurafrep)	25		

(continued)

TABLE A2 (Continued)

Venture Number	Participants	Ownership, Percent	Kind of Activity	Area
	French government agency			
71	AMOCO MAURETANIA PETROLEUM CO.	80	Exploration, Concession, 14,942 sq. mi.	Mauretania
	Amoco International Oil Co.			
	Standard Oil Company (Indiana)			
	PLANET OIL AND MINERAL CORP.	20	Drilling	
72	OCCIDENTAL PETROLEUM CORP.	50	Exploration, Concession 4,600 sq. mi.	Morocco
	BUREAU DE RECHERCHES ET DE PARTICIPATION MINIERES (BRPM)	50		
	Moroccan government			
73	SOCIETE NATIONALE DES PETROLES D'AQUITAINE (SNPA)	50	Exploration, Concession 5,790 sq. mi.	Morocco (offshore)
	Elf/Erap (51.0)			
	French government agency			
	Compagnie Francaise des Petroles (CFP) (7.2)			
	French government (35)			
	Others (65)			
	BUREAU DE RECHERCHES ET DE PARTICIPATION MINIERES (BRPM)	50		
	Moroccan government			
74	SOCIETE NATIONALE DES PETROLES D'AQUITAINE (SNPA)	80	Concession	Morocco

(continued)

TABLE A2 (Continued)

Venture Number	Participants	Ownership, Percent	Kind of Activity	Area
	Elf/Erap (51) French government agency Compagnie Francaise des Petroles (CFP) (7.2) French government (35) Others (65) Others (41.8)			
	BUREAU DE RECHERCHES ET DE PARTICIPATION MINIERES (BRPM)	20		
	Moroccan government			
75	SOCIETE CHERIFIENNE DES PETROLES	100	Concession, 7,600 sq. mi. 3 producing fields	Morocco
	Bureau de Recherches et de Participation Minieres (BRPM) (50) Moroccan government Elf/Erap (36) French government agency Compagnie Francaise des Petroles (CFP) (6.71) French government (35) Others (65) Others (7.29)			
76	TENNECO OIL CO.	50	Concession 2,654 sq. mi.	Morocco
	BUREAU DE RECHERCHES ET DE PARTICIPATION MINIERES (BRPM)	50		
	Moroccan government			

(continued)

TABLE A2 (Continued)

Venture Number	Participants	Ownership, Percent	Kind of Activity	Area
77	SOCIETE DE PARTICIPATIONS PETROLIERES (PETROPAR)	90	Concession 14,600 sq. mi.	Niger
	Elf/Erap (86.66)			
	French government agency			
	Others (13.44)			
	SOCIETE DE PROSPECTION ET EXPLOITATIONS PETROLIERES EN ALSACE (PREPA)	10		
	Elf/Erap			
	French government agency			
78	SOCIETE DE PARTICIPATIONS PETROLIERES (PETROPAR)	90	Concession 26,000 sq. mi.	Niger
	Elf/Erap (86.66)			
	French government agency			
	Others (13.44)			
	COMPAGNIE FRANCAISE DES PETROLES (CFP) ..	10		
	French government (35)			
	Others (65)			
79	SHELL-BP PETROLEUM DEVELOPMENT COMPANY OF NIGERIA, LTD.	100	Exploration, Concession, 40,000 sq. mi. Drilling, Discovery, 35 producing fields	Nigeria
	Royal Dutch/Shell Group (50)			
	British Petroleum Co., Ltd. (50)			

(continued)

TABLE A2 (Continued)

Venture Number	Participants	Ownership, Percent	Kind of Activity	Area
80	AMERICAN OVERSEAS PETROLEUM, LTD.	100	Concession, Drilling, Discovery, 1 producing field	Nigeria (offshore)
	California Texas Oil Co.			
	Standard Oil Company of California (50)			
	Texaco, Inc. (50)			
81	TENNECO NIGERIA, INC.	50	Concession, 4,775 sq. mi.	
	Tenneco, Inc.			
	SUNRAY NIGERIA, INC.	25	Drilling, Discovery, 1 producing field	
	Sun Oil Co.			
	SINCLAIR NIGERIAN OIL	25		
	Sinclair Oil Co.			
	Atlantic Richfield Co.			
82	PHILLIPS PETROLEUM CO.	50	Concession, 2,031 sq. mi. Drilling, Discovery, 4 producing fields	Nigeria
	NIGERIAN AGIP OIL CO., LTD.	50		
	Agip S.p.A.			
	Ente Nazionale Idrocarburi (ENI) (84)			
	Italian government co.			
	Others (16)			
83	MOBIL PRODUCING NIGERIA	50	Exploration, Concession 889 sq. mi.	Nigeria
	Mobil Oil Corp.			
	TENNECO NIGERIA, INC.	25		
	Tenneco, Inc.			
	SUNRAY NIGERIAN OIL CO.	25		

(continued)

TABLE A2 (Continued)

Venture Number	Participants	Ownership, Percent	Kind of Activity	Area
	Sun Oil Co.			
84	PAN OCEAN OIL CORP.	50	Concession	Nigeria
	Catawaba Corp.			
	AMERADA PETROLEUM CORP.	50		
	Amerada-Hess Corp.			
85	SAFRAP (NIGERIA), LTD.	[a]	Concession, Drilling, Discovery, 1 producing field	Nigeria
	Elf/Erap			
	French government agency			
	SOCIETE ANONYME FRANCAISE DE RECHERCHES ET D'EXPLOITATION DE PETROLE (SAFREP)	[a]		
	Elf/Erap (67.5)			
	French government agency			
	Others (32.5)			
86	OCCIDENTAL PETROLEUM OF NIGERIA	49	Exploration, Concession, 1,150 sq. mi. Drilling	Nigeria (offshore)
	Occidental Petroleum Corp.			
	NIGERIAN NATIONAL OIL CO.	51		
	Nigerian government			
87	JAPAN PETROLEUM COMPANY (NIGERIA), LTD.	49	Exploration, Concession	Nigeria
	Teikoku Oil Co., Ltd.			

(continued)

TABLE A2 (Continued)

Venture Number	Participants	Ownership Percent	Kind of Activity	Area
	Private Japanese capital		670 sq. mi.	
	Teijin, Ltd.			
	Private Japanese capital			
	Mitsui Petroleum Development Co.			
	Private Japanese capital			
	NIGERIAN NATIONAL OIL CO.	51		
	Nigerian government			
88	COMPAGNIE DES PETROLES TOTAL (AFRIQUEOUEST) (Copetao)	50	Concession, 5,200 sq. mi. Drilling	Senegal (offshore)
	Compagnie Francaise des Petroles (CFP) (99.9)			
	French government (35)			
	Others (65)			
	TEXAS GULF SULPHUR CO.	50		
89	UNION CARBIDE PETROLEUM CORP.	50	Concession 3,975 sq. mi.	Sierra Leone
	Ashland Oil, Inc.			
	PAN OCEAN OIL CORP.	50		
	Catawaba Corp.			
90	CONTINENTAL OIL CO.	50	Concession, 2,625 sq. mi. Drilling	Spanish Sahara (offshore)
	SPANISH GULF OIL CO.	25		
	Gulf Oil Corp.			
	COMPANA ESPANOLA DE PETROLEOS	25		

(continued)

TABLE A2 (Continued)

Venture Number	Participants	Ownership, Percent	Kind of Activity	Area
91	CALTEX GROUP OF COMPANIES	100	Concession, 6,562 sq. mi.	Spanish Sahara
	Standard Oil Company of California (50)			
	Texaco, Inc. (50)			
92	TIDEWATER OIL CO.	50	Exploration, Concession, 8,437 sq. mi. Drilling	Spanish Sahara
	Mission Corp.			
	Getty Oil Co. (76.70)			
	STANDARD OIL COMPANY (OHIO)	50		
93	CITIES SERVICE CO.	35	Concession, 3,437 sq. mi. Drilling	Spanish Sahara
	ATLANTIC RICHFIELD CO.	35		
	COMPANIA ARRENDATARIA DEL MONOPOLIO DE PETROLEOS S.A.	30		
	Spanish government agency			
94	AMOCO INTERNATIONAL OIL CO.	50	Concession 1,876 sq. mi.	Spanish Sahara
	Standard Oil Company (Indiana)			
	INSTITUTO NACIONAL DE INDUSTRIA (INI) .	50		
95	PURE OIL CO.	25	Exploration, Concession, 2,168 sq. mi. Drilling	Spanish Sahara
	Union Oil Company of California			
	CHAMPLIN PETROLEUM CO.	25		
	Union Pacific Railroad			
	SUN OIL CO.	25		
	PETROLIFERA IBERICA	25		

(continued)

TABLE A2 (Continued)

Venture Number	Participants	Ownership, Percent	Kind of Activity	Area
	Private Spanish capital			
96	UNION OIL COMPANY OF CALIFORNIA	70	Exploration, Concession, 2,796 sq. mi. Drilling	Spanish Sahara
	PETROLIFERA IBERICA	30		
	Private Spanish capital			
97	UNION CARBIDE PETROLEUM CORP.	[a]	Exploration, Concession, Drilling	Togo (offshore)
	Ashland Oil, Inc.			
	AMERADA PETROLEUM CORP.	[a]		
	Amerada-Hess Corp.			
	FRONTIER INTERNATIONAL PETROLEUM CORP.	[a]		
	Frontier Petroleum Co., Inc.			
	KOCH EXPLORATION CO.	[a]		
	ASHLAND OIL, INC.	[a]		
98	SOCIETE DE RECHERCHES ET D'EXPLOITATION DES PETROLES EN TUNISIE	100	Concession 21,127 sq. mi.	Tunisia
	Elf/Erap (56.9)			
	French government agency			
	Compagnie Francaise des Petroles (CFP) (10.9)			
	French government (35)			
	Others (65)			
	Tunisian government (23.9)			
	Others (8.3)			

(continued)

TABLE A2 (Continued)

Venture Number	Participants	Ownership, Percent	Kind of Activity	Area
99	SOCIETE DE RECHERCHES ET D'EXPLOITATION DES PETROLES EN TUNISIE	30	Concession, 6,250 sq. mi. Drilling, Discovery, 3 producing fields	Tunisia
	Elf/Erap (56.9)			
	French government agency			
	Compagnie Francaise des Petroles (CFP) (10.9)			
	French government (35)			
	Others (65)			
	Tunisian government (23.9)			
	Others (8.3)			
	SOCIETE NATIONALE DES PETROLES D'AQUITAINE (SNPA)	70		
	Elf/Erap (51)			
	French government agency			
	Compagnie Francaise des Petroles (CFP) (7.2)			
	French government (35)			
	Others (65)			
	Others (41.8)			
100	CORONADO PETROLEUM CORP.[c]	100	Exploration, Concession 10,948 sq. mi.	Tunisia
	Continental Oil Co. (33.3)[b]			
	Amerada Petroleum Corp. (33.3)			
	Marathon Oil Co. (33.3)			
101	MOBIL OIL TUNISIA, LTD.	50	Concession, 15,625 sq. mi.	Tunisia
	Mobil Oil Corp.			

(continued)

TABLE A2 (Continued)

Venture Number	Participants	Ownership, Percent	Kind of Activity	Area
	SOCIETE DE RECHERCHES ET D'EXPLOITATION DES PETROLES EN TUNISIE	50	Drilling	
	Elf/Erap (56.9)			
	French government agency			
	Compagnie Francaise des Petroles (CFP) (10.9)			
	French government (35)			
	Others (65)			
	Tunisian government (23.9)			
	Others (8.3)			
102	SOCIETE ITALIO-TUNISIENNE D'EXPLOITATION PETROLIERE (SITEP)	50	Exploration, Concession, 4,635 sq. mi. Drilling, Discovery, 1 producing field	Tunisia
	Agip S.p.A.			
	Ente Nazionale Idrocarburi (ENI) (84)			
	Italian government co.			
	Others (16)			
	TUNISIAN GOVERNMENT	50		

SOURCE: Data compiled from World Oil, 1957-1971, The Oil and Gas Journal, 1957-1971, International Petroleum Register, 1966-67, Eastern Hemisphere Petroleum Directory, 1971-72, USA Oil Directory, 1972.

(continued)

[a]Percent ownership not available.

[b]Ownership percentages do not add to 100, due to rounding.

[c]This company was dissolved in 1963; however, the concession remains divided by thirds among the company's former owners.

TABLE A3

JOINT VENTURES IN EXPLORATION AND DRILLING,
BY KIND OF ACTIVITY, ALASKA, 1957-1971

Venture Number	Participants	Ownership, Percent	Kind of Activity	Area
1	ATLANTIC RICHFIELD CO., ALASKA DISTRICT .	44.75	Concession, 11,259 sq. mi. Drilling (2),[a] Discovery (2), 1 producing field	Swanson River
	Atlantic Richfield Co.			
	STANDARD OIL COMPANY OF CALIFORNIA,			
	WESTERN OPERATIONS, INC.	44.75		
	Standard Oil Company of California			
	UNION OIL COMPANY OF CALIFORNIA	5.25		
	MARATHON OIL CO.	5.25		
2	UNION OIL COMPANY OF CALIFORNIA	43.75	Concession, 203 sq. mi. Drilling	Kenai Peninsula
	MARATHON OIL CO.	43.75		
	ATLANTIC RICHFIELD CO., ALASKA DISTRICT .	5.25		
	Atlantic Richfield Co.			
	STANDARD OIL COMPANY OF CALIFORNIA,			
	WESTERN OPERATIONS, INC.	5.25		
	Standard Oil Company of California			
	HALBOUNTY ALASKA OIL CO.	1.00		
	SUNRAY MID-CONTINENT OIL CO.	1.00		
	Sun Oil Co.			
3	ATLANTIC RICHFIELD CO., ALASKA DISTRICT .	33.3[b]	Concession, 167 sq. mi. Drilling (4), Discovery (4), 1 producing	Kenai Peninsula Cook Inlet
	Atlantic Richfield Co.			
	STANDARD OIL COMPANY OF CALIFORNIA			
	WESTERN OPERATIONS, INC.	33.3		
	Standard Oil Company of California			

(continued)

TABLE A3 (Continued)

Venture Number	Participants	Ownership, Percent	Kind of Activity	Area
	SHELL OIL CO.	33.3	field	
	Royal Dutch/Shell Group			
4	STANDARD OIL COMPANY OF CALIFORNIA,			
	WESTERN OPERATIONS, INC.	c	Farmout,	Kenai
	Standard Oil Company of California		52 sq. mi.	Peninsula
	ATLANTIC RICHFIELD CO., ALASKA DISTRICT.	c	Drilling	
	Atlantic Richfield Co.			
	SHELL OIL CO.	c		
	Royal Dutch/Shell Group			
	SINCLAIR OIL & GAS CO.	c		
	Atlantic Richfield Co.			
5	HUMBLE OIL & REFINING CO.	50	Exploration,	Alaska
	Standard Oil Company (New Jersey)		Concession,	Peninsula
	SHELL OIL CO.	50	422 sq. mi.	
	Royal Dutch/Shell Group		Drilling	
6	UNION OIL COMPANY OF CALIFORNIA	c	Concession,	Kenai
	MARATHON OIL CO.	c	343 sq. mi.	Peninsula
			Drilling (2),	Cook Inlet
			Discovery (2)	
7	PAN AMERICAN PETROLEUM CORP.	25	Concession,	Cook Inlet
	Standard Oil Company (Indiana)		60 sq. mi.	

(continued)

TABLE A3 (Continued)

Venture Number	Participants	Ownership, Percent	Kind of Activity	Area
	PHILLIPS PETROLEUM CO.	25	Drilling (4),	
	SKELLY OIL CO.	25	Discovery (4),	
	Mission Corp. (52.52)		2 producing	
	Getty Oil Co. (76.70)		fields	
	Getty Oil Co. (41.0)			
	Others (7.48)			
	SINCLAIR OIL & GAS CO.	25		
	Atlantic Richfield Co.			
8	BRISTOL BAY GROUP	___[c]	Concession,	Bristol
	Great Basin Petroleum Corp.		1, 562 sq. mi.	Bay
	Reserve Oil and Gas Co.		Drilling	
	Monterey Oil Co.			
	Hudson Oil & Gas Co.			
	Republic Natural Gas Co.			
	GEWERKSCHAFT ELWERATH	___[c]		
	Deutsche Shell A. G. (50)			
	Royal Dutch/Shell Group			
	Esso A. G. (50)			
	Standard Oil Company (New Jersey)			
	MOBIL OIL CORP., NORTH AMERICAN DIVISION	___[c]		
	Mobil Oil Corp.			
9	PAN AMERICAN PETROLEUM CORP.	50	Concession,	Alaska
	Standard Oil Company (Indiana)		2 sq. mi.	Peninsula
	STANDARD OIL COMPANY OF CALIFORNIA,		Drilling	

(continued)

TABLE A3 (Continued)

Venture Number	Participants	Ownership, Percent	Kind of Activity	Area
	WESTERN OPERATIONS, INC.	50		
	Standard Oil Company of California			
10	MOBIL OIL CO., NORTH AMERICAN DIVISION ..	___[c]	Concession,	Cook Inlet
	Mobil Oil Corp.		30 sq. mi.	
	ATLANTIC RICHFIELD CO., ALASKA DISTRICT .	___[c]	Drilling,	
	Atlantic Richfield Co.		Discovery	
11	SHELL OIL CO.	25.0[b]	Concession,	Cook Inlet
	Royal Dutch/Shell Group		Drilling	
	STANDARD OIL COMPANY OF CALIFORNIA,			
	WESTERN OPERATIONS, INC.	25.0		
	Standard Oil Company of California			
	ATLANTIC RICHFIELD CO., ALASKA DISTRICT .	25.0		
	Atlantic Richfield Co.			
	TEXACO, INC.	8.3		
	SUPERIOR OIL CO.	8.3		
	BRITISH AMERICAN OIL CO.	8.3		
	Gulf Oil Corp. (69)			
	Others (31)			
12	STANDARD OIL COMPANY OF CALIFORNIA,			
	WESTERN OPERATIONS, INC.	___[c]	Exploration	Cook Inlet
	Standard Oil Company of California			
	TEXACO, INC.	___[c]		

(continued)

TABLE A3 (Continued)

Venture Number	Participants	Ownership, Percent	Kind of Activity	Area
	SHELL OIL CO.	___[c]		
	Royal Dutch/Shell Group			
	PAN AMERICAN PETROLEUM CORP.	___[c]		
	Standard Oil Company (Indiana)			
	MARATHON OIL CO.	___[c]		
	SUN OIL CO.	___[c]		
	UNION OIL COMPANY OF CALIFORNIA	___[c]		
	ATLANTIC RICHFIELD CO., ALASKA DISTRICT.	___[c]		
	Atlantic Richfield Co.			
	SUPERIOR OIL CO.	___[c]		
	WESTERN GULF OIL CO.	___[c]		
13	SKELLY OIL CO.	___[c]	Exploration 300,000 sq. mi.	Alaska Peninsula to Bering Sea
	Mission Corp. (52.52)			
	Getty Oil Co. (76.70)			
	Getty Oil Co. (41.0)			
	HUMBLE OIL & REFINING CO.	___[c]		
	Standard Oil Company (New Jersey)			
	STANDARD OIL COMPANY OF CALIFORNIA, WESTERN OPERATIONS, INC.	___[c]		
	Standard Oil Company of California			
	TEXACO, INC.	___[c]		
	GULF OIL CORP.	___[c]		
	ATLANTIC RICHFIELD CO., ALASKA DISTRICT.	___[c]		
	Atlantic Richfield Co.			
	GETTY OIL CO., NORTH AMERICAN EXPLORATION AND PRODUCTION DIVISION	___[c]		

(continued)

TABLE A3 (Continued)

Venture Number	Participants	Ownership, Percent	Kind of Activity	Area
	Getty Oil Co.			
	UNION OIL COMPANY OF CALIFORNIA	___c		
	SUN OIL CO.	___c		
	MURPHY OIL CORP.	___c		
	SUPERIOR OIL CO.	___c		
	AMERICAN PETROFINA	___c		
	Petrofina S.A.	___		
	UNION CARBIDE PETROLEUM CO.	___c		
	Union Carbide Corp.			
	Ashland Oil, Inc.			
	PHILLIPS PETROLEUM CO.	___c		
14	PAN AMERICAN PETROLEUM CORP.	___c	Exploration	Beaufort Sea, North Slope
	Standard Oil Company (Indiana)	___		
	HUMBLE OIL & REFINING COMPANY	___c		
	Standard Oil Company (New Jersey)	___		
	MOBIL OIL CORP., ALASKA DIVISION	___c		
	Mobil Oil Corp.	___		
	STANDARD OIL COMPANY OF CALIFORNIA,			
	WESTERN OPERATIONS, INC.	___c		
	Standard Oil Company of California	___		
	SHELL OIL CO.	___c		
	Royal Dutch/Shell Group	___		
	TEXACO, INC.	___c		
	GULF OIL CORP.	___c		
	BP EXPLORATION COMPANY (ALASKA), INC. ..	___c		
		___		

(continued)

TABLE A3 (Continued)

Venture Number	Participants	Ownership, Percent	Kind of Activity	Area
	British Petroleum Co., Ltd.			
	CONTINENTAL OIL CO., WESTERN HEMISPHERE PETROLEUM	c		
	Continental Oil Co.			
	ATLANTIC RICHFIELD CO., ALASKA DISTRICT .	c		
	Atlantic Richfield Co.			
	CITIES SERVICE CO.	c		
	MARATHON OIL CO.	c		
	PHILLIPS PETROLEUM CO.	c		
	UNION OIL COMPANY OF CALIFORNIA	c		
	GETTY OIL CO., NORTH AMERICAN EXPLORATION AND PRODUCTION DIVISION	c		
	Getty Oil Co.			
	SKELLY OIL CO.	c		
	Mission Corp. (52.52)			
	Getty Oil Co. (76.70)			
	Getty Oil Co. (41)			
	TENNECO, INC.	c		
	THE SIGNAL COMPANIES, INC.	c		
	OCCIDENTAL PETROLEUM CORP.	c		
	SUPERIOR OIL CO.	c		
	HAMILTON BROTHERS OIL CO.	c		
	PLACID OIL CO.	c		
	Hunt Oil Co.			
	PENNZOIL UNITED, INC.	c		
	UNION CARBIDE PETROLEUM CO.	c		
	Union Carbide Corp.			

(contined)

TABLE A3 (Continued)

Venture Number	Participants	Ownership, Percent	Kind of Activity	Area
	Ashland Oil, Inc.			
	LION OIL CO.	___[c]		
	Monsanto Co.			
	TRANS OCEAN OIL, INC.	___[c]		
15	HUMBLE OIL & REFINING CO.	50	Concession, (206 blocks)[d]	North Slope & Prudhoe Bay
	Standard Oil Company (New Jersey)			
	ATLANTIC RICHFIELD CO., ALASKA DISTRICT .	50	Drilling (3), Discovery (3)	
	Atlantic Richfield Co.			
16	BP EXPLORATION COMPANY (ALASKA), INC. ...	50	Concession, (109 blocks)	North Slope
	British Petroleum Co., Ltd.			
	ATLANTIC RICHFIELD CO., ALASKA DISTRICT .	50	Drilling	
	Atlantic Richfield Co.			
17	BP EXPLORATION COMPANY (ALASKA), INC. ...	31.25	Concession, (17 blocks)	North Slope
	British Petroleum Co., Ltd.			
	ATLANTIC RICHFIELD CO., ALASKA DISTRICT .	31.25	Drilling	
	Atlantic Richfield Co.			
	UNION OIL COMPANY OF CALIFORNIA	37.50		
18	BP EXPLORATION COMPANY (ALASKA), INC. ...	___[c]	Concession, (6 blocks)	North Slope
	British Petroleum Co., Ltd.			
	GULF OIL CORP.	___[c]	Drilling,	
	BP Oil CORP.	___[c]	Discovery	
	Standard Oil Company (Ohio)			

(continued)

TABLE A3 (Continued)

Venture Number	Participants	Ownership, Percent	Kind of Activity	Area
19	MOBIL OIL CORP., NORTH AMERICAN DIVISION Mobil Oil Corp. PHILLIPS PETROLEUM CO.	___c ___c	Concession, (91 blocks) Drilling, Discovery	North Slope
20	MOBIL OIL CORP., NORTH AMERICAN DIVISION Mobil Oil Corp. STANDARD OIL COMPANY OF CALIFORNIA, WESTERN OPERATIONS, INC. ..... Standard Oil Company of California	___c ___c	Concession (7 blocks)	North Slope
21	MOBIL OIL CORP., NORTH AMERICAN DIVISION Mobil Oil Corp. PHILLIPS PETROLEUM CO. ..... STANDARD OIL COMPANY OF CALIFORNIA, WESTERN OPERATIONS, INC. ..... Standard Oil Company of California	___c ___c ___c	Concession, (5 blocks) Drilling, Discovery	North Slope & Prudhoe Bay
22	SHELL OIL CO. ..... Royal Dutch/Shell Group STANDARD OIL COMPANY OF CALIFORNIA, WESTERN OPERATIONS, INC. ..... Standard Oil Company of California	___c ___c	Concession (66 blocks)	North Slope
23	PAN AMERICAN PETROLEUM CORP. ..... Standard Oil Company (Indiana)	___c	Concession (100 blocks)	North Slope

(continued)

TABLE A3 (Continued)

Venture Number	Participants	Ownership, Percent	Kind of Activity	Area
	ATLANTIC RICHFIELD CO., ALASKA DISTRICT .. [c]			
	Atlantic Richfield Co.			
	SUN OIL COMPANY, NORTH AMERICAN EXPLORATION DIVISION ..... [c]			
	Sun Oil Co.			
24	TEXACO, INC. ..... [c]		Concession, (5 blocks)	North Slope
	SHELL OIL CO. ..... [c]			
	Royal Dutch/Shell Group			
25	UNION OIL COMPANY OF CALIFORNIA ..... [c]		Concession (26 blocks)	North Slope
	PAN AMERICAN CORP. ..... [c]			
	Standard Oil Company (Indiana)			
26	CONTINENTAL OIL CO., WESTERN HEMISPHERE PETROLEUM ..... [c]		Concession (11 blocks)	North Slope
	Continental Oil Co.			
	SUN OIL CO., NORTH AMERICAN EXPLORATION DIVISION ..... [c]			
	Sun Oil Co.			
	CITIES SERVICE CO. ..... [c]			
27	OCCIDENTAL PETROLEUM CORP. ..... [c]		Concession (2 blocks)	North Slope
	AGIP S.P.A. ..... [c]			
	Ente Nazionale Idrocarburi (ENI) (84)			
	Italian government co.			
	Others (16)			

(continued)

TABLE A3 (Continued)

Venture Number	Participants	Ownership, Percent	Kind of Activity	Area
	BUTTES GAS & OIL CO.	[c]		
28	AMERADA-HESS GROUP[e]	100	Concession (18 blocks)	North Slope
	Amerada Petroleum Corp. (27)			
	Amerada-Hess Corp.			
	Placid Oil Co. (29.25)			
	Hunt Oil Co.			
	Getty Oil Co. (30.5)			
	Louisiana Land and Exploration Co. (13.25)			

SOURCE: Data compiled from World Oil, 1957-1971, The Oil and Gas Journal, 1957-1971, International Petroleum Register, 1966-67, and USA Oil Directory, 1972.

[a]Numbers in parentheses ( ) under kind of activity refer to the number of joint activities, as shown in the source.

[b]Ownership percentages do not add to 100, due to rounding.

[c]Percent ownership not available.

[d]One block is approximately 4 square miles.

[e]This group owns a total of 18 blocks, but the members' ownership participation varies from block to block.

TABLE A4

JOINT VENTURES IN EXPLORATION AND DRILLING BY KIND OF ACTIVITY, ASIA-PACIFIC, 1957-1971

Venture Number	Participants	Ownership, Percent	Kind of Activity	Area
1	AMERICAN OVERSEAS PETROLEUM, LTD. ..... California Asiatic Co. (50) Standard Oil Company of California Texaco Overseas Oil Co. (50) Texaco, Inc.	100	Exploration, Concession	Philippines
2	P.T. CALTEX PACIFIC INDONESIA. ..... Texaco, Inc. (50) Standard Oil Company of California (50)	100	Exploration, Concession, 28,152 sq. mi. Drilling (2),a Discovery (2), 11 producing fields	Indonesia (on and offshore)
3	NIPPON OIL DEVELOPMENT CO. ..... TEXACO OVERSEAS PETROLEUM CO. ..... Texaco, Inc. CHEVRON OVERSEAS PETROLEUM, INC. ..... Standard Oil Company of California	50 25 25	Concession, 20,000 sq. mi. Concession, 5,100 sq. mi. Concession, 10,000 sq. mi.	East China Sea Shikoku Islands (offshore) Danjo Islands

(continued)

TABLE A4 (Continued)

Venture Number	Participants	Ownership, Percent	Kind of Activity	Area
4	TEXACO OVERSEAS PETROLEUM CO.	40	Concession	South
	Texaco, Inc.		29,600 sq. mi.	Korea
	CHEVRON OVERSEAS PETROLEUM, INC.	40		(offshore)
	Standard Oil Company of California			
	SOUTH KOREAN GOVERNMENT	20		
5	TEXACO OVERSEAS PETROLEUM CO.	35	Concession	Sumatra
	Texaco, Inc.		44,712 sq. mi.	(offshore)
	PERTIMINA	65		
	Indonesian government co.			
6	SHELL SURINAM	50	Concession,	Surinam
	Royal Dutch/Shell Group		Drilling	
	ELF/ERAP	50		
	French government agency			
7	SHELL KOREA N.V.	80	Concession	South
	Royal Dutch/Shell Group		29,600 sq. mi.	Korea
	SOUTH KOREAN GOVERNMENT	20		(offshore)
8	KOREA GULF OIL CO.	80	Concession	South
	Gulf Oil Corp.		27,000 sq. mi.	Korea
	SOUTH KOREAN GOVERNMENT	20		(offshore)

(continued)

TABLE A4 (Continued)

Venture Number	Participants	Ownership, Percent	Kind of Activity	Area
9	P. T. STANVAC INDONESIA	100	Concession, 5,781 sq. mi. Drilling, 1 producing field	Sumatra (on and offshore)
	Esso Standard Eastern, Inc. (50)			
	Standard Oil Company (New Jersey)			
	Mobil Oil Corp. (50)			
10	P. T. STANVAC INDONESIA	80	Concession 4,362 sq. mi.	Sumatra
	Esso Standard Eastern, Inc. (50)			
	Standard Oil Company (New Jersey)			
	Mobil Oil Corp. (50)			
	TOA NENRYO KOGYO K.K.	10		
	Esso Standard Eastern, Inc. (25)			
	Standard Oil Company (New Jersey)			
	Mobil Oil Corp. (25)			
	Private Japanese capital (50)			
	GENERAL SEKIYU SEISEI K.K.	5		
	Esso Standard Sekiyu K.K. (50)			
	Standard Oil Company (New Jersey)			
	General Sekiyu K.K. (50)			
	Private Japanese capital			
	KYOKUTO PETROLEUM INDUSTRIES, LTD.	5		
	Mobil Oil Corp. (50)			
	Mitsui & Co. (50)			
	Private Japanese capital			
11	MOBIL OIL INDONESIA	___[b]	Farmout	Sumatra (offshore)
	Mobil Oil Corp.			

(continued)

TABLE A4 (Continued)

Venture Number	Participants	Ownership, Percent	Kind of Activity	Area
	ASAMERA OIL (INDONESIA), LTD. ..... [b]			
	Asamera Oil Corp.			
12	AUSTRALASIAN PETROLEUM CO., PTY, LTD. ...	100	Concession, Drilling	New Guinea
	Oil Search, Ltd. (80)			
	Private Australian capital			
	BP Exploration Co., Ltd. (10)			
	British Petroleum Co., Ltd.			
	Mobil Oil Australia, Ltd. (10)			
	Mobil Oil Corp.			
13	BURMAH OIL COMPANY (1954), LTD.	100	Exploration, Concession, Drilling	Burma
	Burmah Oil Co., Ltd. (66.67)			
	Burmese government (33.33)			
14	OIL INDIA (PRIVATE), LTD.	100	Concession, 11,800 sq. mi. Drilling, Discovery	India
	Burmah Oil Co., Ltd. (50)			
	Burmese government (50)			
15	PAKISTAN PETROLEUM, LTD. ..... [b]		Concession, Drilling	West Pakistan
	Burmah Oil Co., Ltd. (70)			
	Pakistan government (30)			
	PAKISTAN OILFIELDS, LTD. ..... [b]			
	Attock Oil Co., Ltd. (70)			
	Pakistan government (30)			

(continued)

TABLE A4 (Continued)

Venture Number	Participants	Ownership, Percent	Kind of Activity	Area
16	UNION OIL COMPANY OF INDONESIA	___[b]	Concession,	East
	Union Oil Company of California		111 sq. mi.	Borneo
	JAPEX INDONESIA, LTD.	___[b]	Drilling,	
	North Sumatra Oil Development Cooperation Co., Ltd.		Discovery, 1 producing field	
	Overseas Economic Cooperative Fund (30.77)			
	Sekiyu Shigeu Kaihatsu (7.69)			
	Refining Companies (23.08)			
	Heavy Industries (15.15)			
	Trading Companies (14.76)			
	Others (8.55)			
	PERTMINA	___[b]		
	Indonesian government co.			
17	UNION OIL COMPANY OF INDONESIA	80	Concession	Gulf of
	Union Oil Company of California		7,410 sq. mi.	Thailand
	SOUTHEAST ASIA PETROLEUM EXPLORATION CO.	20		
	Maruzen Oil Co. (33.3)[c]			
	Union Oil Company of California (33)			
	Private Japanese capital (67)			
	Daikyo Oil Co., Ltd. (33.3)			
	Private Japanese capital			
	Nippon Mining Co. (33.3)			
	Private Japanese capital			

(continued)

TABLE A4 (Continued)

Venture Number	Participants	Ownership, Percent	Kind of Activity	Area
18	CONTINENTAL OIL COMPANY OF INDONESIA	50	Concession	Gulf of Thailand
	Continental Oil Co.			
	MITSUI OIL EXPLORATION CO.	50		
	Mitsui & Co.			
	Private Japanese capital			
19	AMOCO INTERNATIONAL OIL CO.	50	Concession	Gulf of Thailand
	Standard Oil Company (Indiana)		9,354 sq. mi.	
	IDEMITSU KOSAN CO., LTD.	50		
	Private Japanese capital			
20	AMOCO INTERNATIONAL OIL CO.	[b]	Exploration	Formosa Straits
	Standard Oil Company (Indiana)			
	CHINESE PETROLEUM CORP.	[b]		
	Taiwan government			
21	AMOCO INTERNATIONAL OIL CO.	[b]	Exploration	Formosa (offshore)
	Standard Oil Company (Indiana)			
	CHINA GULF OIL CO., LTD.	[b]		
	Gulf Oil Corp.			
	OCEANIA EXPLORATION CO.	[b]		
	CLINTON INTERNATIONAL CORP.	[b]		
22	AMOCO INTERNATIONAL OIL CO.	40	Concession	Sumatra
	Standard Oil Company (Indiana)		13,500 sq. mi.	
	PERTIMINA	60		
	Indonesian government co.			

(continued)

TABLE A4 (Continued)

Venture Number	Participants	Ownership, Percent	Kind of Activity	Area
23	INDONESIA CITIES SERVICE, INC.	---[b]	Concession	Java
	Cities Service Co.		56,000 sq. mi.	(offshore)
	ASHLAND OIL INTERNATIONAL, INC.	---[b]		
	Ashland Oil, Inc.			
	LION OIL CO.	---[b]		
	Monsanto Co.			
	ROBIN LOH	---[b]		
24	JAPAN PETROLEUM DEVELOPMENT CORP.	35	Concession,	East Borneo
	Japanese government co.		40,000 sq. mi.	
	PERTMINA	65	Drilling	
	Indonesian government co.			
25	KYUSHU OIL DEVELOPMENT CO., LTD.	---[b]	Concession	South
	Private Japanese capital		50,180 sq. mi.	Borneo
	PERTAMINA	---[b]		
	Indonesian government co.			
26	JAPEX INDONESIA, LTD.	---[b]	Concession	North
	North Sumatra Oil Development Cooperation Co., Ltd.		25,500 sq. mi.	Sumatra (offshore)
	Overseas Economic Cooperative Fund (30.77)			
	Sekiyu Shigeu Kaihatsu (7.69)			
	Refining Companies (23.08)			
	Heavy Industries (15.15)			
	Trading Companies (14.76)			
	Others (8.55)			

(continued)

TABLE A4 (Continued)

Venture Number	Participants	Ownership, Percent	Kind of Activity	Area
	PERTAMINA	___b		
	Indonesian government co.			
27	ASAMERA OIL COMPANY (INDONESIA)	24	Concession, 1,170 sq. mi.	North Sumartra
	Asamera Oil Corporation of Calgary			
	UNION TEXAS DIVISION	12	Drilling, Discovery	
	Allied Chemical Corp.			
	BENEDUM-TREES OIL CO.	4		
	PERTAMINA	60		
	Indonesian government co.			
28	CONTINENTAL OIL COMPANY OF INDONESIA ...	___b	Concession	South China Sea Gulf
	Continental Oil Co.			
	PERTAMINA	___b		
	Indonesian government co.			
29	AGIP S.P.A.	40	Concession 38,000 sq. mi.	South China Sea Gulf
	Ente Nationale Idrocarburi (ENI) (84)			
	Italian government co.			
	Others (16)			
	PERTAMINA	60		
	Indonesian government co.			
30	CONTINENTAL OIL COMPANY OF INDONESIA ...	60	Exploration, Concession	South China Sea
	Continental Oil Co.			
	UNION OIL COMPANY OF INDONESIA	40	41,000 sq. mi.	
	Union Oil Company of California			

(continued)

TABLE A4 (Continued)

Venture Number	Participants	Ownership, Percent	Kind of Activity	Area
31	CONTINENTAL OIL COMPANY OF INDONESIA	17.5	Concession, 5,525 sq. mi.	Borneo
	Continental Oil Co.			
	UNION OIL COMPANY OF INDONESIA	17.5	Drilling	
	Union Oil Company of California			
	PERTAMINA	65.0		
	Indonesian government co.			
32	INDEPENDENT INDONESIAN AMERICAN PETROLEUM CO.	56.65	Exploration, Concession, 51,000 sq. mi.	Sumatra (offshore)
	Natomas Co. (93)			
	Others (7)			
	SUNDA SHELL N.V.	___b	Drilling	
	Royal Dutch/Shell Group			
	WARRIOR INTERNATIONAL CORP.	___b		
	TIDEWATER MARINE SERVICE, INC. (U.K.) LTD.	___b		
	PENNZOIL UNITED, INC.	___b		
	HAMILTON BROTHERS PETROLEUM CORP.	___b		
	HILLARD OIL & GAS CO.	___b		
	CARVER-DODGE INTERNATIONAL	___b		
	Reading & Bates Offshore Drilling Co. (54)			
	INDOMAR	___b		
33	SINCLAIR EXPLORATION CO.	46.0	Concession, 21,000 sq. mi.	Java Sea
	Atlantic Richfield Co.			

(continued)

TABLE A4 (Continued)

Venture Number	Participants	Ownership, Percent	Kind of Activity	Area
	INDEPENDENT INDONESIAN AMERICAN PETROLEUM CO.	31.85	Drilling (2), Discovery (2), 2 producing fields	
	Natomas Co.			
	CARVER-DODGE OIL CO.	12.15		
	Reading & Bates Offshore Drilling Co. (56)			
	WARRIOR OIL CO.	5.0		
	NATOMAS INTERNATIONAL CORP.	5.0		
34	JENNY MANUFACTURING CO.	6.25	Concession 29,216 sq. mi.	Sumatra (offshore)
	STATE MARINE LINE, INC.	18.75		
	SANTA FE INTERNATIONAL CORP.	18.75		
	SYRACUSE OILS, LTD.	6.25		
	MARATHON OIL CO.	50.00		
35	BP EXPLORATION CO., LTD.	25	Concession 18,000 sq. mi.	Borneo (offshore)
	British Petroleum Co., Ltd.			
	KYUSHU OIL DEVELOPMENT CO.	50		
	Private Japanese capital			
	UNION CARBIDE PETROLEUM CORP.	25		
	Ashland Oil, Inc.			
36	BP EXPLORATION CO., LTD.	—[b]	Concession 9,500 sq. mi.	Borneo (offshore)
	British Petroleum Co., Ltd.			
	PERTAMINA	—[b]		
	Indonesian government co.			

(continued)

TABLE A4 (Continued)

Venture Number	Participants	Ownership, Percent	Kind of Activity	Area
37	INDONESIAN GULF OIL CO.	80	Concession 6,600 sq. mi.	West Irian New Guinea
	Gulf Oil Corp.			
	WHITESTONE INDONESIA, INC.	20		
	Whitestone Petroleum Corp.			
38	INDONESIAN GULF OIL CO.	50	Concession 8,840 sq. mi.	Sumatra (offshore)
	Gulf Oil Corp.			
	JAPEX INDONESIA, LTD.	50		
	North Sumatra Oil Development Cooperation Co., Ltd.			
	Overseas Economic Cooperative Fund (30.77)			
	Sekiyu Shigeu Kaihatsu (7.69)			
	Refining Companies (23.08)			
	Heavy Industries (15.15)			
	Trading Companies (14.76)			
	Others (8.55)			
39	GULF OIL COMPANY--ASIA	50	Concession, 16,200 sq. mi.	Amakusa Islands (Japan), East China Sea
	Gulf Oil Corp.			
	TEIKOKU OIL CO., LTD.	50	Concession 1,544 sq. mi.	
	Private Japanese capital			
40	CHINA GULF OIL CO., LTD.	50	Exploration	Taiwan (offshore)
	Gulf Oil Corp.			

(continued)

TABLE A 4 (Continued)

Venture Number	Participants	Ownership, Percent	Kind of Activity	Area
	CHINESE PETROLEUM CORP.	50		
	Taiwan government			
41	OCEAN OIL	100	Concession	South Vietnam (offshore)
	Gulf Oil Company--Asia			
	Gulf Oil Corp.			
	Japanese Oil Development Corp.			
	Marubeni--India			
	Ito-Chu Co., Ltd.			
	Mitsue Bussan Co., Ltd.			
	Mitsubishi Oil Co., Ltd.			
	Getty Oil Co. (49)			
	Japanese capital (51)			
	Nissho-Iwai Co., Ltd.			
	Alaska Oil Co., Ltd.			
	Idemitsu Kosan Co., Ltd.			
42	WESTERN JAPAN OIL DEVELOPMENT CO.	100	Exploration, Concession, 38,000 sq. mi. Concession 195 sq. mi.	Sea of Japan, Tsushima Strait, Sea of Japan
	Royal Dutch/Shell Group (50)			
	Mitsubishi Group (50)			
	Japanese capital			
43	AMOCO PAKISTAN EXPLORATION CO.	70	Concession 20,000 sq. mi.	Pakistan
	Standard Oil Company (Indiana			

(continued)

TABLE A4 (Continued)

Venture Number	Participants	Ownership, Percent	Kind of Activity	Area
	OIL & GAS DEVELOPMENT CORP.	30		
	Pakistan government			
44	ATLANTIC RICHFIELD INDONESIA, INC.	51.0	Concession	Sumatra
	Atlantic Richfield Corp.		15,440 sq. mi.	(offshore)
	PAN OCEAN OIL CORP.	35.1		
	Catawaba Corp.			
	KONDUR PETROLEUM S.A.	10.0		
	Ingram Corp.			
	HOUSTON OILS, LTD.	3.9		
45	PHILLIPS PETROLEUM COMPANY OF INDONESIA .	33.3[c]	Concession	South
	Phillips Petroleum Co.		77,224 sq. mi.	China
	AGIP-DIMI S.P.A. INDONESIA	33.3		Sea
	Ente Nazionale Idrocarburi (84)			
	Italian government co.			
	Others (16)			
	TENNECO INDONESIA, INC.	33.3		
	Tenneco, Inc.			
46	PHILLIPS PETROLEUM COMPANY OF INDONESIA .	30	Concession	New
	Phillips Petroleum Co.		38,000 sq. mi.	Guinea
	AGIP-DIMI S.P.A. INDONESIA	50		
	Ente Nazionale Idrocarburi (84)			
	Italian government co.			
	Others (16)			

(continued)

TABLE A4 (Continued)

Venture Number	Participants	Ownership, Percent	Kind of Activity	Area
	CONTINENTAL OIL COMPANY OF INDONESIA.....	20		
	Continental Oil Co.			
47	PHILLIPS PETROLEUM COMPANY OF INDONESIA .	29	Concession	South China
	Phillips Petroleum Co.		44,776 sq. mi.	Sea
	AGIP-DIMI S.P.A. INDONESIA	29		
	Ente Nazionale Idrocarburi (84)			
	Italian government co.			
	Others (16)			
	TENNECO INDONESIA, INC.	29		
	Tenneco , Inc.			
	FRONTIER PETROLEUM CO.	13		
48	CONTINENTAL OIL COMPANY OF INDONESIA	75	Concession,	South China
	Continental Oil Co.		41,000 sq. mi.	Sea
	GETTY OIL INTERNATIONAL (INDONESIA), INC.	25	Drilling	
	Getty Oil Co.			
49	TOTAL INDONESIE	35	Concession	Sumatra
	Compagnie Francaise des Petroles (CFP)		8,300 sq. mi.	
	French government (35)			
	Others (65)			
	PERTAMINA	65		
	Indonesian government co.			

(continued)

SOURCE: Data compiled from World Oil, 1957-1971, The Oil and Gas Journal, 1957-1971, International Petroleum Register, 1966-67, Eastern Hemisphere Petroleum Directory, 1971-72, USA Oil Directory, 1972.

[a]Numbers in parentheses ( ) under kind of activity refer to the number of joint activities, as shown in the source.

[b]Percent ownership not available.

[c]Ownership percentages do not add to 100, due to rounding.

TABLE A5

JOINT VENTURES IN EXPLORATION AND DRILLING, BY KIND OF ACTIVITY, AUSTRALASIA, 1957-1971

Venture Number	Participants	Ownership, Percent	Kind of Activity	Area
1	WEST AUSTRALIAN PETROLEUM PTY, LTD. ..	100	Exploration (2),[a] Concession, 300,000 sq. mi. Drilling (3), Discovery (1)	Western Australia
	California Asiatic Oil Co. (28.5)			
	Standard Oil Company of California			
	Texaco Overseas Petroleum Co. (28.5)			
	Texaco, Inc.			
	Shell Development (Australia) Pty, Ltd. (28.5)			
	Royal Dutch/Shell Group			
	Ampol Exploration, Ltd. (14.5)			
	Private Australian capital			
2	WEST AUSTRALIAN PETROLEUM PTY, LTD. ..	50	Exploration, Farmout, 45,500 sq. mi. Drilling	Western Australia
	California Asiatic Oil Co. (28.5)			
	Standard Oil Company of California			
	Texaco Overseas Petroleum Co. (28.5)			
	Texaco, Inc.			
	Shell Development (Australia) Pty, Ltd. (28.5)			
	Royal Dutch/Shell Group			
	Ampol Exploration, Ltd. (14.5)			
	Private Australian capital			
	CONTINENTAL OIL COMPANY OF AUSTRALIA .	25		
	Continental Oil Co.			
	AUSTRALIAN SUN OIL CO.	25		
	Sun Oil Co.			

(continued)

TABLE A5 (Continued)

Venture Number	Participants	Ownership, Percent	Kind of Activity	Area
3	WESTERN AUSTRALIAN PETROLEUM PTY, LTD. ..	50	Farmout, 2,900 sq.mi. Drilling, Discovery	Western Australia
	California Asiatic Oil Co. (28.5)			
	Standard Oil Company of California			
	Texaco Overseas Petroleum Co. (28.5)			
	Texaco, Inc.			
	Shell Development (Australia) Pty, Ltd. (28.5)			
	Royal Dutch/Shell Group			
	Ampol Exploration, Ltd. (14.5)			
	Private Australian capital			
	FRENCH PETROLEUM COMPANY (AUSTRALIA) PTY, LTD.	50		
	Compagnie Francaise des Petroles d' Algeria (CFP(A))			
	Compagnie Francaise des Petroles (CFP) (85)			
	French government (35)			
	Others (65)			
	Compagnie Financiere de Recherches Petrolieres (7.5)			
	French government			
	Societe Financiere des Petroles (7.5)			
	French government			
	Australian Aquitaine Petroleum Pty, Ltd.			
	Societe Nationale des Petroles d' Aquitaine (SNPA)			

(continued)

TABLE A5 (Continued)

Venture Number	Participants	Ownership, Percent	Kind of Activity	Area
	Elf/Erap (51.0) French government agency Compagnie Francaise des Petroles (CFP) (7.2) French government (35) Others (65) Others (41.8)			
4	WESTERN AUSTRALIAN PETROLEUM PTY, LTD. .. California Asiatic Oil Co. (28.5) Standard Oil Company of California Texaco Overseas Petroleum Co. (28.5) Texaco, Inc. Shell Development (Australia) Pty, Ltd. (28.5) Royal Dutch/Shell Group Ampol Exploration, Ltd. (14.5) Private Australian capital UNION OIL DEVELOPMENT CORP. ..... Union Oil Company of California	50 50	Farmout, Drilling	Western Australia
5	AUSTRALASIAN PETROLEUM CO., PTY, LTD. ... Oil Search, Ltd. (80) Private Australian capital BP Exploration Co., Ltd. (10) British Petroleum Co., Ltd. Mobil Oil Australia, Ltd. (10)	100	Drilling	Papua

(continued)

TABLE A5 (Continued)

Venture Number	Participants	Ownership, Percent	Kind of Activity	Area
	Mobil Oil Corp.			
6	AUSTRALASIAN PETROLEUM CO., PTY, LTD. ..	50	Exploration, Farmout, Drilling	Papua
	Oil Search, Ltd. (80)			
	Private Australian capital			
	BP Exploration Co., Ltd. (10)			
	British Petroleum Co., Ltd.			
	Mobil Oil Australia, Ltd. (10)			
	Mobil Oil Corp.			
	ESSO EXPLORATION & PRODUCTION, INC.	50		
	Standard Oil Company (New Jersey)			
7	OIL SEARCH, LTD.	50	Exploration, Farmout 4,170 sq. mi.	Papua
	Private Australian capital			
	TEXACO OVERSEAS PETROLEUM CO.	50		
	Texaco, Inc.			
8	SHELL BP AND TODD OIL SERVICES, LTD. ...	100	Exploration, 20,000 sq. mi. Concession, 6,535 sq. mi. Drilling (2), Discovery (2), 1 producing field	New Zealand (offshore)
	Royal Dutch/Shell Group			
	British Petroleum Co., Ltd.			
	Todd Brothers, Ltd.			
	Private New Zealand capital			
9	SHELL BP AND TODD OIL SERVICES, LTD. ...	__b	Exploration	North

(continued)

TABLE A5 (Continued)

Venture Number	Participants	Ownership, Percent	Kind of Activity	Area
	Royal Dutch/Shell Group British Petroleum Co., Ltd. Todd Brothers, Ltd. Private New Zealand capital SOCIETE NATIONALE DES PETROLES D'AQUITAINE (SNPA) ..... Elf/Erap (51) French government agency Compagnie Francaise des Petroles (CFP) (7.2) French government (35) Others (65) Others (41.8)	—[b]		Island, New Zealand
10	FROME-BROKEN HILL CO. PTY, LTD. ..... Mobil Oil Australia, Ltd. (33.3)[c] Mobil Oil Corp. BP Exploration Co., Ltd. (33.3) British Petroleum Co., Ltd. Interstate Oil, Ltd. (33.3) Private Australian capital	100	Exploration, Drilling, Discovery	Victoria, Australia (on and offshore)
11	FROME-BROKEN HILL CO. PTY, LTD. ..... Mobil Oil Australia, Ltd. (33.3)[c] Mobil Oil Corp. BP Exploration Co., Ltd. (33.3) British Petroleum Co., Ltd.	50	Farmout, Drilling	Victoria, Australia

(continued)

TABLE A5 (Continued)

Venture Number	Participants	Ownership, Percent	Kind of Activity	Area
	Interstate Oil, Ltd. (33.3) Private Australian capital SHELL DEVELOPMENT (AUSTRALIA) PTY, LTD.. Royal Dutch/Shell Group	50		
12	FROME-BROKEN HILL CO. PTY, LTD. ..... Mobil Oil Australia, Ltd. (33.3)[c] Mobil Oil Corp. BP Exploration Co., Ltd. (33.3) British Petroleum Co., Ltd. Interstate Oil, Ltd. (33.3) Private Australian capital DELHI AUSTRALIAN PETROLEUM, LTD. ..... SANTOS, LTD.	50 25 25	Concession 110,000 sq. mi.	South Australia
13	UNITED CANSO OIL & GAS CO. (N.T.) PTY, LTD. ..... United Canso Oil & Gas, Ltd. (40) Catawba Corp. Magellan Petroleum (N.T.) Pty, Ltd. (26.67) Magellan Petroleum (QLD) Pety, Ltd. (53.3) Magellan Petroleum Australia, Ltd. (80) Magellan Petroleum Corp. (54.4) Catawba Corp.	40	Concession 10,000 sq. mi.	Northern Australia

(continued)

TABLE A5 (Continued)

Venture Number	Participants	Ownership, Percent	Kind of Activity	Area
	Pantepec Internation, Inc. (21.1) Australian public (24.4) United Canso Oil & Gas, Ltd. (30) Catawaba Corp.			
	MAGELLAN PETROLEUM CORP.	26.67		
	Catawaba Corp.			
	PANTEPEC INTERNATIONAL, INC.	33.33		
14	MAGELLAN PETROLEUM CORP.	53.33	Concession 10,000 sq. mi.	Northern Territory
	Catawaba Corp.			
	UNITED CANSO OIL & GAS, LTD.	30.0		
	Catawaba Corp.			
	PANTEPEC INTERNATIONAL, INC.	16.67		
15	MAGELLAN PETROLEUM AUSTRALIA, LTD.	43.33	Concession, 266 sq. mi. Drilling, Discovery	Northern Territory
	Magellan Petroleum Corp. (54.5) Catawaba Corp. Pantepec Internation, Inc. (21.1) Australian public (24.4)			
	UNITED CANSO OIL & GAS (N.T.) PTY. LTD. .	24.38		
	United Canso Oil & Gas, Ltd. (40) Catawaba Corp. Magellan Petroleum (N.T.) Pty, Ltd. (26.67) Magellan Petroleum (QLD) Pty, Ltd. (53.3) Magellan Petroleum Australia, Ltd.			

(continued)

TABLE A5 (Continued)

Venture Number	Participants	Ownership, Percent	Kind of Activity	Area
	(80) Magellan Petroleum Corp. (54.5) Catawaba Corp. Patepec International, Inc. (21.1) Australian public (24.4) United Canso Oil & Gas, Ltd. (30) Catawaba Corp. MAGELLAN PETROLEUM CORP.	13.45		
	Catawaba Crop. FREEPORT OF AUSTRALIA, INC.	9.375		
	Freeport Sulphur Co. FARMOUT DRILLERS N.L.	9.375		
16	MAGELLAN PETROLEUM (N.T.) PTY, LTD. ..... Magellan Petroleum (QLD) Pty, Ltd. (53.3) Magellan Petroleum Australia, Ltd. (80) Magellan Petroleum Corp. (54.5) Catawaba Corp. Pantepec International, Inc. (21.1) Australian public (24.4) United Canso Oil & Gas, Ltd. (30) Catawaba Corp. UNITED CANSO OIL & GAS (N.T.) PTY, LTD. . United Canso Oil & Gas, Ltd. (40) Catawaba Corp. Magellan Petroleum (N.T.) Pty, Ltd. (26.67)	26.5 15.0	Farmout, 299 sq. mi. Drilling, Discovery	Northern Territory

(continued)

TABLE A5 (Continued)

Venture Number	Participants	Ownership, Percent	Kind of Activity	Area
	Magellan Petroleum (QLD) Pty, Ltd. (53.3)			
	Magellan Petroleum Australia, Ltd. (80)			
	Magellan Petroleum Corp. (54.5)			
	Catawaba Corp.			
	Pantepec International, Inc. (21.1)			
	Australian public (24.4)			
	United Canso Oil & Gas, Ltd. (30)			
	Catawaba Corp.			
	PANTEPEC INTERNATIONAL, INC.	8.5		
	EXOIL (N.T.) PTY, LTD.	16.70		
	Exoil Petroleum			
	FARMOUT DRILLERS N.L.	16.65		
	Farmout Drillers			
	AUSTRAM OIL, LTD.	16.65		
17	MAGELLAN PETROLEUM	50.0	Drilling, Discovery	Northern Australia
	Catawaba Corp.			
	TRANSOIL N.L.	9.0		
	EXOIL PETROLEUM	21.0		
	FARMOUT DRILLERS	6.25		
	KREWLIFF INVESTMENTS	13.75		
18	MAGELLAN PETROLEUM CORP.	40	Exploration, Farmout,	Queesland, Australia
	Catawaba Corp.			

(continued)

TABLE A5 (Continued)

Venture Number	Participants	Ownership, Percent	Kind of Activity	Area
	UNITED CANSO OIL & GAS, LTD.....	10	14,375 sq. mi. Drilling	
	Catawaba Corp.			
	AMERICAN OVERSEAS PETROLEUM, LTD.	50		
	California Asiatic Oil Co. (50)			
	Standard Oil Company of California			
	Texaco Overseas Petroleum Co. (50)			
	Texaco, Inc.			
19	MAGELLAN PETROLEUM AUSTRALIA, LTD.	50	Exploration, Concession 3,281 sq. mi.	New South Wales (offshore)
	Magellan Petroleum Corp. (54.5)			
	Catawaba Corp.			
	Pantepec International, Inc. (21.1)			
	Australian public (24.4)			
	SOUTHERN PACIFIC PETROLEUM	50		
20	PHILLIPS AUSTRALIAN OIL CO.	50	Exploration, 43,000 sq. mi.	Queensland, Australia
	Phillips Petroleum Co.			
	SUNRAY AUSTRALIAN OIL CO.	50	Concession, 81,250 sq. mi. Drilling	
	Sun Oil Co.			
21	PHILLIPS AUSTRALIAN OIL CO.	37.5	Exploration, Concession, 35,000 sq. mi. Drilling	Queensland, Australia
	Phillips Petroleum Co.			
	SUNRAY AUSTRALIAN OIL CO.	37.5		
	Sun Oil Co.			
	SENECA OIL CO.	25.0		

(continued)

TABLE A5 (Continued)

Venture Number	Participants	Ownership, Percent	Kind of Activity	Area
22	PHILLIPS AUSTRALIAN OIL CO.	25	Exploration, Drilling (2), Discovery	Papua (offshore)
	Phillips Petroleum Co.			
	TASMAN OIL PTY, LTD.	30		
	Canadian Superior Oil Co.			
	Superior Oil Co.			
	SUNRAY AUSTRALIAN OIL CO.	25		
	Sun Oil Co.			
	ANACAPA CORP.	20		
	Private Australian capital			
23	PHILLIPS AUSTRALIAN OIL CO.	25	Concession, 13,000 sq. mi. Drilling (2), Discovery (2)	Papua (offshore)
	Phillips Petroleum Co.			
	SUNRAY AUSTRALIAN OIL CO.	25		
	Sun Oil Co.			
	ARCO AUSTRALIAN, LTD.	20		
	Atlantic Richfield Co.			
	CANADIAN SUPERIOR OIL (AUSTRALIA) PTY, LTD.	15		
	Canadian Superior Oil Co.			
	Superior Oil Co.			
	AUSTRALIAN SUPERIOR OIL, LTD.	15		
	Superior Oil Co.			
24	ESSO EXPLORATION (AUSTRALIA), INC.	50.0[c]	Farmout 15,000 sq. mi.	New South Wales
	Standard Oil Company (New Jersey)			
	UNION OIL DEVELOPMENT CORP.	16.67		
	Union Oil Company of California			

(continued)

TABLE A5 (Continued)

Venture Number	Participants	Ownership, Percent	Kind of Activity	Area
	KERN COUNTY LAND CO.	16.67		
	Tenneco, Inc.			
	AUSTRALIAN OIL AND GAS CO.	16.67		
	Private Australian capital			
25	ESSO EXPLORATION (AUSTRALIA), INC.	50	Exploration (2), Concession, 35,325 sq. mi. Farmout, Drilling (6), Discovery (5), 4 producting fields	Victoria, Australia (offshore) New Zealand (offshore)
	Standard Oil Company (New Jersey)			
	HAEMATITE EXPLORATION PTY, LTD.	50		
	Broken Hill Proprietary, Ltd.			
	Private Australian capital			
26	ARCO AUSTRALIA, LTD.	50.0	Concession, 74,000 sq. mi. Drilling, Discovery	Northern Territory, Australia (offshore)
	Atlantic Richfield Co.			
	AUSTRALIAN AQUITAINE PETROLES PTY, LTD..	37.5		
	Societe Nationale des Petroles d' Aquitaine (SMPA)			
	Elf/Erap (51)			
	French government agency			
	Compagnie Francaise des Petroles (CFP) (7.2)			
	French government (35)			
	Others (65)			
	Others (41.8)			
	ESSO EXPLORATION (AUSTRALIA), INC.	12.5		

(continued)

TABLE A5 (Continued)

Venture Number	Participants	Ownership, Percent	Kind of Activity	Area
	Standard Oil Company (New Jersey)			
27	SHELL DEVELOPMENT (AUSTRALIA), LTD.	__b	Concession 2,600 sq. mi.	New South Wales
	Royal Dutch/Shell Group			
	AUSTRALIAN OIL AND GAS CORP., LTD.	__b		
	Private Australian capital			
28	WOODSIDE/BURMAH GROUP	100	Exploration, Concession, 103,000 sq. mi. Drilling (2), Discovery (2)	Western Australia (offshore)
	Burmah Oil Company of Australia (16.67)			
	Burmah Oil Co., Ltd.			
	BP Petroleum Development Australia, Pty Ltd. (16.67)			
	British Petroleum Co., Ltd.			
	Woodside Oil N.L. (25)			
	Private Australian capital			
	Burmah Oil Company of Australia[d]			
	Burmah Oil Co., Ltd.			
	Shell Development (Australia) Pty, Ltd. (33.33)			
	Royal Dutch/Shell Group			
	California Asiatic Oil Co.[e]			
	Standard Oil Company of California			
	Texaco Overseas Petroleum Co.[f]			
	Texaco, Inc.			
	Mid-Eastern Oil N.L. (8.33)			
	Woodside Oil N.L.			
	Private Australian capital			

(continued)

TABLE A5 (Continued)

Venture Number	Participants	Ownership, Percent	Kind of Activity	Area
29	WOODSIDE GROUP	100	Drilling, Discovery	Victoria Australia (offshore)
	Woodside Oil N.L. (40)			
	Private Australian capital			
	Burmah Oil Company of Australia (20)			
	Burmah Oil Co., Ltd.			
	Continental Oil Company of Australia (20)			
	Continental Oil Co.			
	Planet Exploration Co., Pty, Ltd. (10)			
	Planet Oil and Gas Co.			
	Australian Oil & Gas Corp., Ltd. (10)			
	Private Australian capital			
30	HEMATITE PETROLEUM PTY, LTD.	33.3[c]	Concession	Papua (offshore)
	Broken Hill Proprietary, Ltd.			
	Private Australian capital			
	SHELL DEVELOPMENT (AUSTRALIA) PTY, LTD..	33.3		
	Royal Dutch/Shell Group			
	AUSTRALIAN GULF OIL CO.	33.3		
	Gulf Oil Corp.			
31	AUSTRALIAN GULF OIL CO.	50	Farmout 57,000 sq. mi.	Queensland, Australia (offshore)
	Gulf Oil Corp.			
	AUSTRALIAN OIL AND GAS CORP.	50		
	Private Australian capital			
32	BP PETROLEUM DEVELOPMENT AUSTRALIA, PTY, LTD.	50	Concession,	Western

(continued)

TABLE A5 (Continued)

Venture Number	Participants	Ownership, Percent	Kind of Activity	Area
	British Petroleum Co., Ltd.		2,750 sq. mi.	Australia
	HAWKSTONE OIL CO., LTD.	50	Drilling	(offshore)
	Abrolhos Oil N.L.	50		
33	AUSTRALASIAN PETROLEUM CO.	—b	Farmout,	Papua
	Oil Search, Ltd. (52.481)		Drilling	(offshore)
	Private Australian capital			
	BP Exploration Co., Ltd. (38.274)			
	British Petroleum Co., Ltd.			
	Mobil Oil Australia, Ltd. (9.245)			
	Mobil Oil Corp.			
	CALTEX PETROLEUM CORP.	—b		
	California Asiatic Oil Co. (50)			
	Standard Oil Company of California			
	Texaco Overseas Petroleum Co. (50)			
	Texaco, Inc.			
34	ESSO EXPLORATION (AUSTRALIA), INC.	50	Exploration,	Papua
	Standard Oil Company (New Jersey)		Farmout,	(offshore)
	AUSTRALASIAN PETROLEUM CO.	50	Drilling	
	Oil Search, Ltd. (52.481)			
	Private Australian capital			
	BP Exploration Co., Ltd. (38.274)			
	British Petroleum Co., Ltd.			
	Mobil Oil Australia, Ltd. (9.245)			
	Mobil Oil Corp.			

(continued)

TABLE A5 (Continued)

Venture Number	Participants	Ownership, Percent	Kind of Activity	Area
35	UNION OIL DEVELOPMENT CO.	50	Concession, 60,000 sq. mi.	Queensland, Australia
	Union Oil Company of California			
	KERN COUNTY LAND CO.	50	Concession, 10,000 sq. mi.	New South Wales, Australia
	Tenneco, Inc.			
	AUSTRALIA OIL & GAS CORP.[g]		Drilling (4), Discovery (3), 1 producing field	
	Private Australian capital			
36	CONORADA PETROLEUM CORP.[h]	100	Concession, 8,300 sq. mi.	Queensland, Australia
	Amerada Petroleum Corp. (33.3)[c]		Concession, 8,740 sq. mi.	Papua
	Amerada-Hess Corp.			
	Continental Oil Co. (33.3)			
	Marathon Oil Co. (33.3)			
37	OCEANIA PETROLEUM, LTD.	50	Farmout 27,000 sq. mi.	Western Australia
	Japan Petroleum Exploration Co. (20)			
	Japanese capital			
	Misho-Iwai (20)			
	Nippon Mining Co.			
	Asia Oil Co., Ltd.			
	Daikyo Oil Co. Ltd.			
	Oil Resources Development			
	Alaska Oil Development			
	North Slope Oil Development			
	Marubeni-Iida			
	Kunematsh Gosho			

(continued)

TABLE A5 (Continued)

Venture Number	Participants	Ownership, Percent	Kind of Activity	Area
	Maruzen Oil Co., Ltd.			
	Union Oil Company of California (33)			
	Japanese private capital (67)			
	CONTINENTAL OIL COMPANY OF AUSTRALIA ...	25		
	Continental Oil Co.			
	AUSTRALIAN SUN OIL CO., LTD.	25		
	Sun Oil Co.			
38	CONTINENTAL OIL COMPANY OF AUSTRALIA ...	25	Drilling	South Australia
	Continental Oil Co.			
	AUSTRALIAN SUN OIL CO., LTD.	25		
	Sun Oil Co.			
	EXOIL N.L.	35		
	Exoil Petroleum			
	TRANSOIL N.L.	15		
	Transoil Petroleum			
39	TENNECO AUSTRALIA, INC.	__b	Concession, Concession, Drilling, 1 producing field	Papua (offshore) Queensland, Australia
	Tenneco, Inc.			
	SIGNAL PACIFIC, INC.	__b		
	The Signal Companies, Inc.			

SOURCE: Data compiled from World Oil, 1957-1971, The Oil and Gas Journal, 1957-1971, International Petroleum Register, 1966-67, Eastern Hemisphere Petroleum Directory, 1971-72, USA Oil Directory, 1972.

(continued)

[a]Numbers in parentheses ( ) under kind of activity refer to the number of joint activities, as shown in the source.

[b]Percent ownership not available.

[c]Ownership percentages do not add to 100, due to rounding.

[d]Company holds 31 percent of Woodside Oil N.L.'s share.

[e]Company holds 25 percent of Shell Development (Australia) Pty, Ltd.'s share.

[f]Company holds 25 percent of Shell Development (Australia) Pty, Ltd.'s share.

[g]Company receives 20 percent of net profits from the venture.

[h]The company was dissolved in 1963; however the concessions remain divided by thirds among the company's former owners.

TABLE A6

JOINT VENTURES IN EXPLORATION AND DRILLING,
BY KIND OF ACTIVITY, CANADA, 1957-1971

Venture Number	Participants	Ownership, Percent	Kind of Activity	Area
1	NORTHERN FOOTHILLS AGREEMENT GROUP	100	Concession, Drilling (2),[a] Discovery, 1 producing field	British Columbia
	Texaco Exploration Canada, Ltd. (25)			
	Texaco, Inc.			
	Shell Canadian Exploration Co. (25)			
	Shell Oil Canada, Ltd.			
	Royal Dutch/Shell Group			
	Gulf Oil Canada, Ltd. (25)			
	Gulf Oil Corp.			
	Mobil Oil Canada, Ltd. (25)			
	Mobil Oil Corp.			
2	MOBIL OIL CANADA, LTD.	50	Concession, Drilling, Discovery	Alberta
	Mobil Oil Corp.			
	ATLANTIC RICHFIELD CANADA, LTD.	50		
	Atlantic Richfield Co.			
3	HUDSON's BAY OIL AND GAS CO., LTD.	--[b]	Concession, Drilling	Alberta
	Continental Oil Co. (65.7)			
	Hudson's Bay Co. (21.9)			
	Others (12.4)			
	HUSKY OIL (ALBERTA), LTD.	--[b]		
	Husky Oil, Ltd.			
	PHILLIPS PETROLEUM CANADA, LTD.	--[b]		
	Phillips Petroleum Co.			
4	CENTRAL FOOTHILLS AGREEMENT GROUP	100	Concession, 1,406 sq. mi.	Alberta
	Triad Petroleum Development, Ltd.(20)			

(continued)

TABLE A6 (Continued)

Venture Number	Participants	Ownership, Percent	Kind of Activity	Area
	Triad Oil Co., Ltd British Petroleum Co., Ltd. (62.6) Gulf Oil Canada, Ltd. (30) Gulf Oil Corp. Sunray DX Canada Oil Co. (25) Sun Oil Co. Mobil Oil Canada, Ltd. (15) Mobil Oil Corp. Royalite Oil Co., Inc. (10) Gulf Oil Canada, Ltd. Gulf Oil Corp. (68)		Drilling (3), Discovery (3)	
5	IMPERIAL OIL, LTD. ..... Standard Oil Company (New Jersey) (70) PACIFIC PETROLEUM, LTD. ..... Phillips Petroleum Co. (48) Others (52)	__[b] __[b]	Concession, Drilling (4), Discovery (4)	Alberta
6	PACIFIC PETROLEUM, LTD. ..... Phillips Petroleum Co. (48) Others (52) SUNRAY DX CANADA OIL CO. ..... Sun Oil Co.	50 50	Concession Drilling, Discovery, 1 producing field	British Columbia
7	HUDSON'S BAY OIL AND GAS CO., LTD. .... Continental Oil Co. (65.7) Hudson's Bay Co. (21.9)	41.67[c]	Concession 1,718 sq. mi. Drilling,	Alberta

(continued)

TABLE A6 (Continued)

Venture Number	Participants	Ownership, Percent	Kind of Activity	Area
	Others (12.4)		Discovery,	
	AMOCO CANADA PETROLEUM CO., LTD.	41.67	1 producing	
	Standard Oil Company (Indiana)		field	
	CANADIAN FINA OIL, LTD.	16.67		
	Canadian Petrofina, Ltd.			
	Petrofina S.A.			
8	PACIFIC PETROLEUM, LTD.	__b	Concession,	British
	Phillips Petroleum Co. (48)		Drilling,	Columbia
	Others (52)		Discovery	
	IMPERIAL OIL, LTD.	__b		
	Standard Oil Company (New Jersey) (70)			
	CANADIAN NORTHERN OIL AND GAS	__b		
	CHARTER OIL CO., LTD.	__b		
	Private Canadian capital			
	CANADIAN INDUSTRIAL GAS AND OIL, LTD. .	__b		
	Private Canadian capital			
9	AMOCO CANADA PETROLEUM CO., LTD.	50	Concession,	Alberta
	Standard Oil Company (Indiana)		Drilling,	
	GULF OIL CANADA, LTD.	50	Discovery	
	Gulf Oil Corp.			
10	GULF OIL CANADA, LTD.	__b	Concession,	Alberta
	Gulf Oil Corp.		Drilling,	
	SHELL CANADIAN EXPLORATION CO.	__b	Discovery	

(continued)

TABLE A6 (Continued)

Venture Number	Participants	Ownership, Percent	Kind of Activity	Area
	Shell Oil Canada, Ltd. Royal Dutch/Shell Group			
11	IMPERIAL OIL, LTD. ..... Standard Oil Company (New Jersey) (70) HARVEST PETROLEUMS, LTD. ..... SUBMARINE OIL AND GAS, LTD.	50 25 25	Concession, Drilling, Discovery	Alberta
12	AMOCO CANADA PETROLEUM CO., LTD. ..... Standard Oil Company (Indiana) PACIFIC PETROLEUM CO., LTD. ..... Phillips Petroleum Co. (48) Others (52) CANADIAN SEABOARD OIL CO. ..... Texaco, Inc.	75 25 25	Concession, Drilling, Discovery	Alberta
13	HUDSON'S BAY OIL AND GAS CO., LTD. .... Continental Oil Co. (65.7) Hudson's Bay Co. (21.9) Others (12.4) UNION OIL COMPANY OF CANADA, LTD. ..... Union Oil of California (87)	b b	Concession, Drilling (3), Discovery (3)	Alberta
14	ATLANTIC RICHFIELD CANADA, LTD. ..... Atlantic Richfield Co. FRENCH PETROLEUM COMPANY OF CANADA, LTD. Compagnie Francaise des Petroles (CFP) (46.2)	21.5 21.5	Concession 5,468 sq. mi.	Northwest Territory

(continued)

TABLE A6 (Continued)

Venture Number	Participants	Ownership, Percent	Kind of Activity	Area
	French government (35) Others (65)			
	CLARK OIL AND REFINING CORP.	21.0		
	HUDSON'S BAY OIL AND GAS CO.	21.0		
	Continental Oil Co. (65.7) Hudson's Bay Co. (21.9) Others (12.4)			
	TECK EXPLORATION CO., LTD.	15.0		
	Teck Corp., Ltd.			
15	IMPERIAL OIL, LTD.	50	Concession, Drilling	Alberta
	Standard Oil Company (New Jersey) (70)			
	TRIAD PETROLEUM DEVELOPMENT, LTD.	50		
	Triad Oil Co., Ltd. British Petroleum Co., Ltd. (62.6)			
16	IMPERIAL OIL, LTD.	50	Concession, Drilling	Alberta, Turner Valley
	Standard Oil Company (New Jersey) (70)			
	HUDSON'S BAY OIL AND GAS CO., LTD.	50		
	Continental Oil Co. (65.7) Hudson's Bay Co. (21.9) Others (12.4)			
17	UNION OIL EXPLORATION AND PRODUCTION CO.	__b	Exploration, Concession, Drilling	
	Union Oil Company of California			
	MARATHON OIL CO.	__b		

(continued)

TABLE A (Continued)

Venture Number	Participants	Ownership, Percent	Kind of Activity	Area
18	HOME OIL CO., LTD.	__b	Concession	Alberta
	United Oils, Ltd.		1 sq. mi.	
	FRENCH PETROLEUM COMPANY OF CANADA, LTD.	__b		
	Compagnie Francaise des Petroles (CFP) (46.2)			
	French government (35)			
	Others (65)			
	TENNECO OIL AND MINERALS, LTD.	__b		
	Tenneco, Inc.			
	FARGO OILS, LTD.	__b		
	General American Oil Company of Texas			
	GENERAL AMERICAN OIL CO., LTD.	__b		
	General American Oil Company of Texas			
19	AMOCO CANADA PETROLEUM CO., LTD.	__b	Concession	Alberta
	Standard Oil Company (Indiana)		3,125 sq. mi.	
	IMPERIAL OIL, LTD.	__b		
	Standard Oil Company (New Jersey) (70)			
	BARAMY INVESTMENTS, LTD.	__b		
	SHELL OIL COMPANY OF CANADA, LTD.	__b		
	Royal Dutch/Shell Group			
	CHARTER OIL CO., LTD.	__b		
	Private Canadian capital			
20	IMPERIAL OIL CO., LTD.	50	Concession,	Saskatch-
	Standard Oil Company (New Jersey) (70)		Drilling	ewan
	SUNRAY DX CANADA OIL CO.	50		

(continued)

TABLE A6 (Continued)

Venture Number	Participants	Ownership, Percent	Kind of Activity	Area
	Sun Oil Co.			
21	STANDARD OIL COMPANY OF BRITISH COLUMBIA, LTD.	__b	Farmout, Drilling, Discovery	Alberta
	Standard Oil Company of California			
	GULF OIL CANADA, LTD.	__b		
	Gulf Oil Corp.			
	PHILLIPS PETROLEUM CANADA, LTD.	__b		
	Phillips Petroleum Co.			
22	CANADIAN FINA OIL, LTD.	__b	Farmout, Drilling (2), Discovery (2)	Alberta
	Canadian Petrofina, Ltd.			
	Petrofina S.A.			
	AMOCO CANADA PETROLEUM CO., LTD.	__b		
	Standard Oil Company (Indiana)			
	HUDSON'S BAY OIL AND GAS CO., LTD.	__b		
	Continental Oil (65.7)			
	Hudson's Bay Co. (21.9)			
	Others (22.4)			
	ATLANTIC RICHFIELD CANADA, LTD.	__b		
	Atlantic Richfield Co.			
	MARATHON INTERNATIONAL OIL CO.	__b		
	Marathon Oil Co.			
23	GULF OIL CANADA, LTD.	__b	Concession, 312 sq. mi. Drilling	Northwest Territory
	Gulf Oil Corp.			
	IMPERIAL OIL, LTD.	__b		

(continued)

TABLE A6 (Continued)

Venture Number	Participants	Ownership, Percent	Kind of Activity	Area
	Standard Oil Company (New Jersey (70) SHELL OIL COMPANY OF CANADA, LTD. ..... Royal Dutch/Shell Group	—b		
24	AMOCO CANADA PETROLEUM, LTD. ..... Standard Oil Company (Indiana) MOBIL OIL CANADA, LTD. ..... Mobil Oil Corp.	50 50	Concession, Drilling	Alberta
25	GULF OIL CANADA, LTD. ..... Gulf Oil Corp. HUDSON'S BAY OIL AND GAS CO., LTD. .... Continental Oil Co. (65.7) Hudson's Bay Co. (21.9) Others (22.4)	50 50	Concession, Drilling, Discovery	Alberta
26	BANFF OIL, LTD. ..... Aquitaine Company of Canada, Ltd. (40.36) Societe Nationale des Petroles d' Aquitaine (SNPA) Elf/Erap (51) French government agency Compagnie Francaise des Petroles (CFP) (7.2) French government (35) Others (65) Others (59.64)	5	Concession 4 sq. mi.	Alberta

(continued)

TABLE A6 (Continued)

Venture Number	Participants	Ownership, Percent	Kind of Activity	Area
	AQUITAINE COMPANY OF CANADA, LTD.	45		
	Societe Nationale des Petroles d' Aquitaine (SNPA)			
	Elf/Erap (51)			
	French government agency			
	Compagnie Francaise des Petroles (CFP) (7.2)			
	French government (35)			
	Others (65)			
	Others (41.8)			
	MOBIL OIL CANADA, LTD.	50		
	Mobil Oil Corp.			
27	AMOCO CANADA PETROLEUM, LTD.	50	Exploration, Concession, 48,437 sq. mi. Drilling (2)	Newfound-land (offshore)
	Standard Oil Company (Indiana)			
	IMPERIAL OIL, LTD.	50		
	Standard Oil Company (New Jersey) (70)			
28	SINCLAIR CANADA OIL CO.	--b	Concession 3 sq. mi.	Alberta
	Atlantic Richfield Co.			
	SKELLY OIL CO.	--b		
	Mission Corp. (52.52)			
	Getty Oil Co. (76.70)			
	Getty Oil Co. (41.0)			
	Others (6.48)			
	SUNRAY DX CANADA OIL	--b		
	Sun Oil Co.			

(continued)

TABLE A6 (Continued)

Venture Number	Participants	Ownership, Percent	Kind of Activity	Area
29	TENNECO OIL AND MINERALS, LTD. ..... Tenneco, Inc.	30	Exploration, Concession, 50,000 sq. mi. Drilling (2)	Labrador (offshore)
	AMERADA-HESS CORP.	30		
	FRENCH PETROLEUM COMPANY OF CANADA, LTD. Compagnie Francaise des Petroles (CFP) (46.2) French government (35) Others (65) Others (53.8)	30		
	AGIP S.P.A. ..... Ente Nazionale Idrocarburi (ENI) (84) Italian government co. Others (16)	10		
30	TRIAD PETROLEUM DEVELOPMENT, LTD. ..... Triad Oil Co., Ltd. British Petroleum Co., Ltd. (62.6) Others (37.4)	__b	Exploration	Prince of Wales Island
	WESTERN DECALTA PETROLEUM, LTD. ..... Private Canadian capital	__b		
31	PACIFIC PETROLEUM, LTD. ..... Phillips Petroleum Co. (48) Others (52)	__b	Concession 831 sq. mi.	Graham Island
	BAILEY-SELBURN OIL AND GAS, LTD. ..... Pacific Petroleum, Ltd. (96) Phillips Petroleum Co. (48) Others (52)	__b		

(continued)

TABLE A6 (Continued)

Venture Number	Participants	Ownership, Percent	Kind of Activity	Area
	WEST COAST PRODUCTION CO., LTD.	__b		
	Westcoast Transmission Co., Ltd.			
	WESTERN PACIFIC PRODUCTS AND CRUDE OIL PIPELINES, LTD.	__b		
	Westcoast Transmission Co., Ltd.			
	PHILLIPS PETROLEUM CANADA, LTD.	__b		
	Phillips Petroleum Co.			
	SUNRAY DX CANADA OIL CO.	__b		
	Sun Oil Co.			
32	CHEVRON OILFIELD RESEARCH CO.	__b	Exploration	Greenland (offshore)
	Standard Oil Company of California			
	AGIP S.P.A.	__b		
	Ente Nazionale Idrocarburi (ENI) (84)			
	Italian government co.			
	Others (16)			
	SHELL OIL COMPANY OF CANADA, LTD.	__b		
	Royal Dutch/Shell Group			
	TEXACO EXPLORATION CANADA, LTD.	__b		
	Texaco, Inc.			
33	CANADA CITIES SERVICE, LTD.	50	Concession 2,500 sq. mi.	Artic Sverdrup Basin
	Cities Service Co.			
	GETTY OIL (CANADA), LTD.	50		
	Getty Oil Co.			
34	PANARTIC OILS, LTD.	__b	Concession,	Artic

(continued)

TABLE A6 (Continued)

Venture Number	Participants	Ownership, Percent	Kind of Activity	Area
	Canadian government (45)		Drilling	Islands,
	Canadian Pacific Oil & Gas Co. (9.03)			Brock
	Canadian Pacific Investments			Island
	Cominco, Ltd. (9.03)			
	Canadian Pacific Investments			
	Dome Petroleum, Ltd. (4.07)			
	Others (32.87)			
	BRITISH PETROLEUM COMPANY OF CANADA,LTD.	__b		
	British Petroleum Co., Ltd.			
	SKELLY OIL CO.	__b		
	Mission Corp. (52.52)			
	Getty Oil Co. (76.70)			
	Getty Oil Co. (41.0)			
	Others (6.48)			
35	IMPERIAL OIL, LTD.	__b	Exploration,	Beaufort
	Standard Oil Company (New Jersey) (70)		Drilling	Sea
	AMOCO CANADA PETROLEUM CO., LTD.	__b		
	Standard Oil Company (Indiana)			
	ELF OIL EXPLORATION AND PRODUCTION CO., LTD.	__b		
	Elf/Erap			
	French government agency			
	GULF OIL CANADA, LTD.	__b		
	Gulf Oil Corp.			
	TEXACO EXPLORATION CANADA, LTD.	__b		
	Texaco, Inc.			

(continued)

TABLE A6 (Continued)

Venture Number	Participants	Ownership, Percent	Kind of Activity	Area
36	BURMAH OIL, INC.	b	Exploration, Drilling	Greenland (offshore)
	Burmah Oil, Ltd.			
	ASHLAND OIL CANADA, LTD.	b		
	Ashland Oil, Inc.			
	CONOCO, LTD.	b		
	Continental Oil Co.			
	GETTY OIL (CANADA), LTD.	b		
	Getty Oil Co.			
	HAMILTON BROTHERS OIL CO.	b		
	Hamilton Brothers, Inc.			
	MARATHON INTERNATIONAL OIL CO.	b		
	Marathon Oil Co.			
	NORSK HYDRO A.S.	b		

SOURCE: Data compiled from World Oil, 1957-1971, The Oil and Gas Journal, 1957-1971, International Petroleum Register, 1966-67, and USA Oil Directory, 1972.

[a]Numbers in parentheses ( ) under kind of activity refer to the number of joint activities, as shown in the source.

[b]Percent ownership not available.

[c]Ownership percentages do not add to 100, due to rounding.

TABLE A7

JOINT VENTURES IN EXPLORATION AND DRILLING BY KIND OF ACTIVITY, CENTRAL AMERICA, 1957-1971

Venture Number		Ownership, Percent	Kind of Activity	Area
1	WARREN PETROLEUM CORP.	__a	Concession,	Nicargua
	Gulf Oil Corp.		17,187 sq. mi.	
	J. RAY MC DERMOT CO., INC.	__a	Drilling	
	WATERFORD OIL CO.	__a		
2	WESTERN HEMISPHERE PETROLEUM CORP.	__a	Concession,	Honduras
	Phillips Petroleum Co.		17,187 sq. mi.	
	McRAE OIL & GAS CORP.	__a	Drilling	
	AMERICAN MARACAIBO,INC.	__a		
	JUSTISS-MEARS OIL CO., INC.	__a		
	OIL AND GAS PROPERTY MANAGEMENT	__a		
	GEORESEARCH, INC.	__a		
	D. HAROLD BYRD	__a		
3	CHAMPLIN PETROLEUM CO.	50	Exploration,	Panama
	Union Pacific Railroad		Concession,	
	KERR-McGEE CORP.	25	1,359 sq. mi.	
	SOUTHLAND ROYALTY CO.	25	Drilling	
4	TRINMAR, LTD.	100	Concession,	Trinidad
	Trinidad-Tesoro Petroleum Co., Ltd.		342 sq. mi.	
	Tesoro Petroleum Corp.		Drilling,	
	Trinidad-Tobago government		Discovery,	
	Shell Oil Co.		1 producing	

(continued)

TABLE A7 (Continued)

Venture Number	Participants	Ownership, Percent	Kind of Activity	Area
	Royal Dutch/Shell Group Texaco, Inc.		field	
5	COMPANIA PETROLERA LA ESTRELLA DE CUBA. Shell Oil Co. (60) Royal Dutch/Shell Group Canadian Eagle Oil Co., Ltd. (40)	100	Concession, Drilling	Cuba
6	GULF OIL CORP. ..... KERR-McGEE CORP.	__a __a	Concession, 166 sq. mi. Drilling, Discovery	Costa Rica
7	ESSO STANDARD (INTER-AMERICA) ..... Standard Oil Company (New Jersey) SHELL OIL CO. ..... Royal Dutch/Shell Group CHEVRON OIL CO. ..... Standard Oil Company of California ATLANTIC RICHFIELD CO.	__a __a __a __a	Exploration, Concession, 1,560 sq. mi.	Cuba
8	BAHAMA CALIFORNIA OIL CO. ..... Standard Oil Company of California BAHAMAS GULF OIL CO. ..... Gulf Oil Corp.	50 50	Concession, 4,570 sq. mi. Drilling	Bahama Islands

(continued)

TABLE A7 (Continued)

Venture Number	Participants	Ownership, Percent	Kind of Activity	Area
9	BRITISH HONDURAS GULF OIL CO.	50	Farmout	Honduras
	Gulf Oil Corp.		7,112 sq. mi.	
	SHELL OIL CO.	50		
	Royal Dutch/Shell Group			
10	ATLANTIC RICHFIELD CO.	—a	Exploration,	British
	BRITISH PETROLEUM EXPLORATIONS, INC. ..	—a	Concession	Honduras
	British Petroleum Co., Ltd.		1,000 sq. mi.	
11	ATLANTIC RICHFIELD CO.	—a	Concession,	Guatemala
	TIDEWATER PIPE LINE CO.	—a	Drilling	
	Crown Central Petroleum Corp.			
	SOHIO PIPE LINE CO.	—a		
	Standard Oil Company (Ohio)			
	UNION OIL COMPANY OF CALIFORNIA	—a		
	CHEVRON OIL CO.	—a		
	Standard Oil Company of California			
12	CUBAN KEWANEE OIL CO.	—a	Farmout,	Cuba
	ATLANTIC RICHFIELD CO.	—a	Drilling	
13	DOMINION OIL, LTD.	—a	Farmout,	Trinidad
	Standard Oil Company of California		31 sq. mi.	
	STEKOLL PETROLEUM CORP.	—a		
14	PAN AMERICAN INTERNATIONAL	33.3b	Exploration,	Trinidad
	Standard Oil Company (Indiana)		Concession	

(continued)

TABLE A7 (Continued)

Venture Number	Participants	Ownership, Percent	Kind of Activity	Area
	PURE OIL CO.	33.3	3,120 sq. mi.	
	Union Oil Company of California			
	SUN OIL CO.	33.3		
15	PAULEY PAN AMERICAN PETROLEUM CO.	50	Concession, Drilling Discovery	Mexico
	Pauley Petroleum, Inc.			
	Continental Oil Co.			
	PETROLEOS MEXICANOS (PERMEX)	50		
	Mexican government co.			
16	PHILLIPS PETROLEUM CO.	—a	Concession, Drilling	British Honduras
	SHELL OIL CO.	—a		
	Royal Dutch/Shell Group			
17	TEXACO, INC.	—a	Concession, 2,343 sq. mi. Drilling	Western Guatemala
	TENNECO OIL, CO.	—a		
	SUPERIOR OIL CO.	—a		
18	SUPERIOR OIL CO.	—a	Concession, 1,562 sq. mi. Drilling	Nicaragua
	ATLANTIC RICHFIELD CO.	—a		
	UNITED OVERSEAS PRODUCTION CO.	—a		
	United Gas Corp.			
	McCULLOH OIL CORP.	—a		
	WESTATES PETROLEUM CO.	—a		
	MOHAWK PETROLEUM CORPORATIONS, INC.	—a		
	Reserve Oil and Gas Co.			
	AMJON EXPLORATION	—a		

(continued)

TABLE A7 (Continued)

Venture Number	Participants	Ownership, Percent	Kind of Activity	Area
	SEELEY G. MUDD	__a		
19	TEXACO, INC.	27	Concession,	Guatemala
	MOBIL OIL CORP.	27	2,013 sq. mi.	
	SUPERIOR OIL CO.	27	Drilling	
	TENNECO OIL CO.	19		
20	BELCO PETROLEUM CORP.	50	Concession,	Trinidad
	PANOIL CO.	50	169 sq. mi. Drilling, Discovery	
21	KARDAR CANADIAN OILS, LTS.	51	Concession,	Dominican
	GAS Y PETROLEOS DOMINICANOS	49	7,969 sq. mi. Drilling	Republic
22	WEAVER INTERNATIONAL JAMAICAN CORP. ...	__a	Exploration,	Jamaica
	TAYLOR AND ASSOCIATES, JAMAICA, INC. ..	__a	Concession	
	KIRBY JAMAICA, INC.	__a	6,093 sq. mi.	
	TAGOR INTERNATIONAL, INC.	__a		
	OIL AND GAS FUTURES OF JAMAICA, INC. ..	__a		
23	TRINIDAD - TESORO PETROLEUM CO., LTD. .	__a	Concession,	Trinidad
	Trinidad - Tobago government (50)		123 sq. mi.	
	Tesoro Petroleum Corp. (50)		Drilling	
	DOMINICAN OIL, LTD.	__a		
	Standard Oil Company of California			

(continued)

TABLE A7 (Continued)

Venture Number	Participants	Ownership, Percent	Kind of Activity	Area
24	TRINIDAD - TESORO PETROLEUM CO., LTD. .	100	Concession,	Trinidad
	Trinidad - Tobago government (50)		Drilling,	
	Tesoro Petroleum Corp. (50)		Discovery	
25	OCEANIC EXPLORATION CO.	__a	Concession,	Panama
	EASTMAN DILLON CO.	__a	3,906 sq. mi.	
	COLORADO OIL AND GAS CORP.	__a	Drilling	
	HAMILTON BROTHERS OIL CO., LTD.	__a		
	Hamilton Brothers, Inc.			
26	SIGNAL EXPLORATION (JAMAICA) CO.	50	Concession	Jamaica
	The Signal-Companies, Inc.		11,561 sq. mi.	
	OCCIDENTAL JAMAICA, LTD.	50		
	Occidental Petroleum Corp.			
27	AGIP - DIR MINERARIA S.P.A.	__a	Concession	Trinidad
	Ente Nazionale Idrocarburi (ENI) (84)		647 sq. mi.	& Tobago
	Italian government co.			
	Others (16)			
	DEMINEX	__a		
	Gelsenkirchener Bergwerks (18.5)			
	Veba - Chimie (18.5)			
	Badische Anilin und Sodafabrik A.G. (BASF) (18.5)			
	Union Rhenische Braunkohlen Kraftstoff (13.5)			
	Deutsche Schachtbau-und Tiefbohrges(10)			

(continued)

TABLE A7 (Continued)

Venture Number	Participants	Ownership, Percent	Kind of Activity	Area
	Saarbergwerk (9) Preussag (7) C. Dielmann (5)			
28	PHILLIPS PETROLEUM CO.	__a	Exploration,	Trinidad
	CLEARY PETROLEUM CORP.	__a	Concession	& Tobago
	APCO OIL CORP.	__a	647 sq. mi.	
29	CHEVRON OIL CO.	__a	Exploration	Honduras
	Standard Oil Company of California			
	MOBIL OIL CORP.	__a		
	SHELL OIL CO.	__a		
	Royal Dutch/Shell Group			
	SIGNAL OIL AND GAS CO.	__a		
	The Signal Companies, Inc.			
	KEWANEE OVERSEAS OIL CORP.	__a		
	Kewanee Oil Co.			
30	AMERADA-HESS CORP.	__a	Concession,	Trinidad
	ASHLAND OIL, INC.	__a	547 sq. mi.	& Tobago
			Drilling	
31	PHILLIPS OIL CO.	20	Concession,	Trinidad
	APCO OIL CORP.	18	503 sq. mi.	& Tobago
	CLEAR CREEK CO., INC.	18	Drilling	
	National Cooperative Refinery Association			

(continued)

TABLE A7 (Continued)

Venture Number	Participants	Ownership, Percent	Kind of Activity	Area
	DEPCO TRINIDAD, INC.	17		
	Depco, Inc.			
	CLEARY PETROLEUM CORP.	14.5		
	TEXAS PACIFIC OF TRINIDAD	12.5		
	Texas Pacific Oil Co., Inc.			
32	GULF OIL CORP.	--[a]	Concession,	Bahama
	MOBIL OIL CORP.	--[a]	Drilling	Islands
	CHEVRON OIL CO.	--[a]		
	Standard Oil Company of California			
33	COMPANIA CENTRAM S.A.	100	Concession	Guatemala
	International Nickel Co.		987 sq. mi.	
	Hanna Mining Co.			
34	OCEANIC EXPLORATION AND DEVELOPMENT			
	CORP.	--[a]	Concession	Trinidad
	SANTA FE INTERNATIONAL CORP.	--[a]	251 sq. mi.	
	TERRA TRINIDAD CO.	--[a]		
	TOBAGO, LTD., INC.	--[a]		

SOURCE: Data compiled from World Oil, 1957-1971, The Oil and Gas Journal, 1957-1971, International Petroleum Register, 1966-67, USA Oil Directory, 1972, Latin America Petroleum Directory, 1971.

[a]Percent ownership not available.

[b]Ownership percentages do not add to 100, due to rounding.

TABLE A8

JOINT VENTURES IN EXPLORATION AND DRILLING,
BY KIND OF ACTIVITY, MIDDLE EAST, 1956-1971

Venture Number	Participants	Ownership, Percent	Kind of Activity	Area
1	IRANIAN OIL EXPLORATION AND PRODUCING CO.	100	Concession 75,000 sq. mi.	Iran
	Iranian Oil Participants, Ltd.			
	British Petroleum Co., Ltd. (40)			
	Royal Dutch/Shell Group (14)			
	Gulf Oil Crop. (7)			
	Mobil Oil Corp. (7)			
	Standard Oil Company (New Jersey) (7)			
	Standard Oil Company of California (7)			
	Texaco, Inc. (7)			
	Compagnie Francaise des Petroles (CFP) (6)			
	French government (35)			
	Others (65)			
	Iricon Agency, Ltd. (5)			
	Atlantic Richfield Co. (1.667)			
	The Signal Companies, Inc. (0.833)			
	American Independent Oil Co. (0.833)			
	Reynolds Industries, Inc.			
	R. J. Reynolds, Inc.			
	Getty Oil Co. (0.417)			
	San Jacinto Petroleum Corp. (0.417)			
	Continental Oil Co.			
	Standard Oil Company (Ohio) (0.417)			
	Tidewater Oil Co. (0.417)			
	Getty Oil Co.			

(continued)

TABLE A8 (Continued)

Venture Number	Participants	Ownership, Percent	Kind of Activity	Area
2	MOSUL PETROLEUM CO., LTD.	100	Concession, 24 sq. mi. 2 producing fields	Iraq
	Iraq Petroleum Co., Ltd.			
	British Petroleum Co., Ltd. (23.75)			
	Royal Dutch/Shell Group (23.75)			
	Compagnie Francaise des Petroles (CFP) (23.75)			
	French government (35)			
	Others (65)			
	Near East Development Corp. (23.75)			
	Standard Oil Company (New Jersey) (50)			
	Mobil Oil Corp. (50)			
	Participations and Exploration Corp. (5)			
	C. S. Gulbenkian Estate			
3	BASRAH PETROLEUM CO., LTD.	100	Concession, 436 sq. mi. 2 producing fields	Iraq
	Iraq Petroleum Co., Ltd.			
	British Petroleum Co., Ltd. (23.75)			
	Royal Dutch/Shell Group (23.75)			
	Compagnie Francaise des Petroles (CFP) (23.75)			
	French government (35)			
	Others (65)			
	Near East Development Corp. (23.75)			
	Standard Oil Company (New Jersey) (50)			
	Mobil Oil Corp. (50)			

(continued)

TABLE A8 (Continued)

Venture Number	Participants	Ownership, Percent	Kind of Activity	Area
	Participations and Exploration Corp. (5) C. S. Gulbenkian Estate			
4	ABU DHABI PETROLEUM CO., LTD. ..... Iraq Petroleum Co., Ltd. British Petroleum Co., Ltd. (23.75) Royal Dutch/Shell Group (23.75) Compagnie Francaise des Petroles (CFP) (23.75) French government (35) Others (65) Near East Development Corp. (23.75) Standard Oil Company (New Jersey) (50) Mobil Oil Corp. (50) Participations and Exploration Corp. (5) C. S. Gulbenkian Estate	100	Concession, 11,000 sq. mi. 1 producing field	Abu Dhabi
5	PETROLEUM DEVELOPMENT (OMAN, LTD. ..... Royal Dutch/Shell Group (85) Compagnie Francaise des Petroles (CFP) (10) French government (35) Others (65) Participations and Explorations Corp. (5)	100	Concession, 82,000 sq. mi. 4 producing fields	Muscat & Oman

(continued)

TABLE A8 (Continued)

Venture Number	Participants	Ownership, Percent	Kind of Activity	Area
	C. S. Gulbenkian Estate			
6	KUWAIT OIL CO., LTD. ..... British Petroleum Co., Ltd. (50) Gulf Oil Corp. (50)	100	Concession, 2,584 sq. mi. Drilling, Discovery, 1 producing field	Kuwait
7	ABU DHABI MARINE AREAS, LTD. ..... British Petroleum Co., Ltd. (66.67) Compagnie Francaise des Petroles (CFP) (33.33) French government (35) Others (65)	100	Concession, 11,197 sq. mi. Drilling, Discovery	Abu Dhabi
8	DUBAI PETROLEUM CO. ..... Continental Oil Co.	35	Drilling, Discovery, 1 producing	Dubai (offshore)
	DUBAI MARINE AREAS, LTD. ..... British Petroleum Co., Ltd. (66.67) Compagnie Francasie des Petroles (CFP) (33.33) French government (35) Others (65)	50		
	DEUTSCHE TEXACO A.G. ..... Texaco, Inc. (97)	10		
	DUBAI SUN OIL CO. ..... Sun Oil Co.	5		

(continued)

TABLE A8 (Continued)

Venture Number	Participants	Ownership, Percent	Kind of Activity	Area
9	AMERICAN INDEPENDENT OIL CO.	50	Concession, Drilling, Discovery, 3 producing fields	Neutral Zone
	Reynolds Industries, Inc.			
	R. J. Reynolds, Inc.			
	GETTY OIL CO.	50		
10	PAULEY PETROLEUM, INC.	__a	Concession, 31,333 sq. mi.	Jordan
	Continental Oil Co.			
	PHILLIPS PETROLEUM CO. SAUDI ARABIA	__a	Drilling, 1 producing field	
	Phillips Petroleum Co.			
11	TURKIYE PETROLLERI ANONIM ORTAKLIGI	50	Concession, Drilling	Turkey (offshore)
	Turkish government			
	TURKISH GULF OIL CO.	50		
	Gulf Oil Corp.			
12	ARABIAN AMERICAN OIL CO. (ARAMCO)	100	Concession, 125,000 sq. mi. 8 producing fields	Saudi Arabia (on and offshore)
	Standard Oil Company of California (30)			
	Texaco, Inc. (30)			
	Standard Oil Company (New Jersey) (30)			
	Mobil Oil Corp. (10)			
13	PAN AMERICAN MAHRA OIL CO.	80	Concession 76,000 sq. mi.	Aden
	American International Oil Co.			
	Standard Oil Company (Indiana)			
	MAHRA SULTANATE OF QISHN AND SOCOTRA ...	20		
	Independent state in Aden Protectorate			

(continued)

TABLE A8 (Continued)

Venture Number	Participants	Ownership, Percent	Kind of Activity	Area
14	ARABIAN OIL CO., LTD.	100	Concession	Neutral Zone (offshore)
	Japan Petroleum Trading Co., Ltd. (80)			
	Saudi Arabian government (10)			
	Kuwait government (10)			
15	BAHRAIN PETROLEUM CO., LTD.	100	Concession, Drilling	Bahrain (offshore)
	California Texas Oil Corp.			
	Standard Oil Company of California (50)			
	Texaco, Inc. (50)			
16	CONTINENTAL OIL COMPANY OF TURKEY	43	Concession, Drilling	Turkey (offshore)
	Continental Oil Co.			
	GEWERKSCHAFT ELWERATH	43		
	Deutsche Shell A.G. (50)			
	Royal Dutch/Shell Group			
	Esso A.G. (50)			
	Standard Oil Company (New Jersey)			
	PANOIL COMPANY OF DALLAS	14		
17	MOBIL EXPLORATION MEDITERRANEAN, INC. ..	80	Concession, 85 sq. mi. Drilling, Discovery, 1 producing field	Turkey
	Mobil Oil Corp.			
	PANOIL COMPANY OF DALLAS	20		

(continued)

TABLE A8 (Continued)

Venture Number	Participants	Ownership, Percent	Kind of Activity	Area
18	UNION OIL COMPANY OF CALIFORNIA	50	Concession,	Trucial
	SOUTHERN NATURAL GAS CO.	50	1,797 sq. mi.	Coast (on and offshore)
19	JOHN W. MECOM	50	Concession,	Trucial
	UNION OIL COMPANY OF CALIFORNIA	50	Drilling, Discovery	Coast
20	MECOM - PURE - CONOCO	100	Concession,	Dhofar
	John W. Mecom (33.3)[b]		32,000 sq. mi.	& Saudi Arabia
	Pure Oil Co. (33.3)			
	Union Oil Company of California			
	Continental Overseas Oil Co. (33.3)			
	Continental Oil Co.			
21	BELPETCO ISRAEL, LTD.	60	Exploration,	Israel
	Belco Petroleum Co.		Concession	(offshore)
	PETROLEUM SERVICES	40		
	Israeli government			
22	LAPIDOTH ISRAEL OIL PROSPECTORS CORP., LTD.	50	Exploration	Israel
	ISRAEL OIL SERVICES	50		(offshore)
	Israeli government			
23	SOCIETE AUXILIARE DE LA REGIE AUTONOME DES PETROLES	60	Concession,	Saudi Arabia

(continued)

TABLE A8 (Continued)

Venture Number	Participants	Ownership, Percent	Kind of Activity	Area
	Elf/Erap French government agency		10,500 sq. mi.	(offshore)
	PETROMIN Saudi Arabian government	40		
24	PHILLIPS PETROLEUM PETROCHEMICALS SAUDI ARABIA, INC.	—a	Concession, 30,000 sq. mi.	Saudi Arabia
	Phillips Petroleum Co.			
	AGIP MINERARIA S.P.A. Ente Nazionale Idrocarburi (ENI) (84) Italian government co.	—a	Drilling	
	Others (16)			
	PETROMIN Saudi Arabian government	—a		
25	PHILLIPS PETROLEUM CO. ABU DHABI	41.67[b]	Concession, 5,000 sq. mi.	Abu Dhabi
	Phillips Petroleum Co.			
	AGIP MINERARIA S.P.A. Ente Nazionale Idrocarburi (ENI) (84) Italian government co.	41.67	Drilling, Discovery, 1 producing field	
	Others (16)			
	AMERICAN INDEPENDENT OIL CO. Reynolds Industries, Inc. R. J. Reynolds, Inc.	16.66		
26	CONTINENTAL OIL COMPANY OF IRAN	—a	Exploration, Concession	Iran
	Continental Oil Co.			

(continued)

TABLE A8 (Continued)

Venture Number	Participants	Ownership, Percent	Kind of Activity	Area
	PHILLIPS PETROLEUM COMPANY OF IRAN	—[a]	5,000 sq. mi.	
	Phillips Petroleum Co.			
27	ABU DHABI OIL CO.	100	Concession,	Abu Dhabi
	Maruzen Oil Co. (33.3)[b]		1,705 sq. mi.	(offshore)
	Union Oil Company of California (33)		Drilling,	
	Japanese capital (67)		Discovery,	
	Daikyo Oil Co. (33.3)		2 producing	
	Nippon Mining Co. (33.3)		fields	
28	INTERNATIONAL PETROLEUM	50	Concession,	Turkey
	Petroleum, Inc.		193, sq. mi.	
	McCULLOCH OIL CORP.	50	Drilling	
29	KUWAIT - SPANISH PETROLEUM CO.	100	Concession,	Kuwait
	Kuwait National Petroleum Co. (51)		3,575 sq. mi.	
	Kuwait government (60)		Drilling,	
	Private Kuwait Interests (40)		1 producing	
	Hispanoil (49)		field	
	Institutio Nacional de Industria (40)			
	Spanish government co.			
	Cia Espanola de Petroles S.A. (20)			
	Petroliber (20)			
	Financiera Fierro (10)			
	Cia Iberica de Petroles (10)			
30	SHELL OIL (TROPICAL STATES), LTD.	60	Concession	Trucial

(continued)

TABLE A8 (Continued)

Venture Number	Participants	Ownership, Percent	Kind of Activity	Area
	Royal Dutch/Shell Group		603 sq. mi.	Coast
	BOCHUMER MINERALOL GESELLSCHAFT (BOMIN).	40	Drilling	(on and
	Private German capital			offshore)
31	ARABIAN SUN OIL CO.	60	Concession	Saudi
	Sun Oil Co.		9,650 sq. mi.	Arabia
	NATOMAS OF ARABIA	30		(on and
	Natomas co.			offshore)
	PAKISTAN NATIONAL OIL CO.	10		
	Pakistani government			
32	FUJI SEKIYU	__a	Concession	Qatar
	Japanese capital		2,895 sq. mi.	(offshore)
	KANSAI SEKIYU	__a		
	Japanese capital			
	TOKYO ELECTRIC POWER	__a		
	Japanese capital			
	KANSAI ELECTRIC POWER	__a		
	Japanese capital			
33	BADISCHE ANILIN-UND SODAFABRIK	25	Concession	Oman
	UNION CARBIDE PETROLEUM CORP.	20		(offshore)
	Ashland Oil, Inc.			
	CAMPAGNIE FRANCAISE DES PETROLES (CFP) .	12.5		
	French government (35)			
	Others (65)			
	BATAAFSE INTERNATIONALE PETROLEUM MIJ ..	20		

(continued)

TABLE A8 (Continued)

Venture Number	Participants	Ownership, Percent	Kind of Activity	Area
	Royal Dutch/Shell Group			
	GELSENKIRCHENER BERGWERKS	12.5		
	Private German capital			
	DEUTSCHE SCHACHTBAU	10		
	Private German capital			
34	SOCIETE AUXILIARE DE LA REGIE AUTONOME DES PETROLES	66.67	Concession, 2,300 sq. mi. Drilling, Discovery, 1 producing field	Saudi Arabia (offshore)
	Elf/Erap			
	French government agency			
	TENNECO SAUDI ARABIA, INC.			
	Tenneco, Inc.			
35	SOCIETA ITALO-IRANIANA DEI PETROLI	100	Concession, 6,483 sq. mi. Drilling, Discovery, 3 producing fields	Iran (offshore)
	AGIP Mineraria S.P.A. (50)			
	Ente Nazionale Idrocarburi (ENI) (84)			
	Italian government co.			
	Others (16)			
	National Iranian Oil Co. (50)			
	Iranian government co.			
36	IRAN PAN AMERICAN OIL CO.	100	Concession, 3,282 sq. mi. Drilling, Discovery, 3 producing fields	Iran (offshore)
	American International Oil Co. (50)			
	Standard Oil Company (Indiana)			
	National Iranian Oil Co. (50)			
	Iranian government co.			

(continued)

TABLE A8 (Continued)

Venture Number	Participants	Ownership, Percent	Kind of Activity	Area
37	FARSI PETROLEUM CO.	100	Concession 2,224 sq. mi.	Iran (offshore)
	Societe Francaise des Petroles d' Iran (SOFIRAN) (50)			
	Elf/Erap (80)			
	French government agency			
	Societe Nationale des Petroles d' Aquitaine (SNPA) (20)			
	Elf/Erap (51)			
	French government agency			
	Compagnie Francaise des Petroles (CFP) (7.2)			
	French government (35)			
	Others (65)			
	Others (41.8)			
	National Iranian Oil Co. (50)			
	Iranian government co.			
38	LAVAN PETROLEUM CO.	100	Concession, 3,089 sq. mi. Drilling, Discovery, 1 producing field	Iran (offshore)
	Arco Exploration Inc. (12.5)			
	Atlantic Richrield Co.			
	Murphy Middle East Oil Co. (12.5)			
	Murphy Oil Corp.			
	Iranian Sun Oil Co. (12.5)			
	Sun Oil Co.			
	Union Oil Company of Iran (12.5)			
	Union Oil Company			
	National Iranian Oil Co. (50)			
	Iranian government co.			

(continued)

TABLE A8 (Continued)

Venture Number	Participants	Ownership, Percent	Kind of Activity	Area
39	DASHESTAN OFFSHORE PETROLEUM CO.	100	Concession 2,332 sq. mi.	Iran (offshore)
	Iran Shell N. V. (50)			
	Royal Dutch/Shell Group			
	National Iranian Oil Co. (50)			
	Iranian government co.			
40	IRANIAN OFFSHORE PETROLEUM CO.	100	Concession 869 sq. mi.	Iran (offshore)
	Arco Exploration Inc. (9)			
	Atlantic Richfield Co.			
	Superior Oil Co. (9)			
	Iranian Sun Oil Co. (9)			
	Sun Oil Co.			
	Kerr-McGee, Ltd. (9)			
	Kerr-McGee Corp.			
	Iran Cities Service Petroleum Corp. (9)			
	Cities Service Co.			
	CEPSA-Iran (5)			
	Companie Espanolade Petrolei S.A.			
	Private Spanish capital			
	National Iranian Oil Co. (50)			
	Iranian government co.			
41	IRANIAN MARINE INTERNATIONAL OIL CO. ...	100	Concession, 3,073 sq. mi. Drilling, Discovery, 1 producing field	Iran (offshore)
	Phillips Petroleum Co. Iran (16.67)[b]			
	Phillips Petroleum Co.			
	AGIP Mineraria, S.P.A. (16.67)			
	Ente Nazionale Idrocarburi (ENI) (84)			
	Italian government co.			

(continued)

TABLE A8 (Continued)

Venture Number	Participants	Ownership, Percent	Kind of Activity	Area
	Others (16) Hydro-Carbon (India), Ltd. (16.67) Oil and Natural Gas Commission, India National Iranian Oil Co. (50) Iranian government co.			
42	PERSIAN GULF PETROLEUM CO.	100	Concession 1,988 sq. mi.	Iran (offshore)
	Deutsche Texaco A.G. (10) Texaco, Inc. (97) Gelsenkirchner Bergwerks A.G. (10) Private German capital Badische Anilin-und Sodafabrik (BASF) (10) Prevssag A.G. (6) Private German capital Veba Chemie A.G. (6) Private German capital Gewerkschaft Elwerath (5) Esso A.G. (50) Standard Oil Company (New Jersey) Deutsche Shell N.V. (50) Royal Dutch/Shell Group Deutsche Scachtbau und Tiefbohr G.m.b.H. (3) Private German capital National Iranian Oil Co. (50) Iranian government co.			

(continued)

TABLE A8 (Continued)

Venture Number	Participants	Ownership, Percent	Kind of Activity	Area
43	MOBIL OIL IRAN, INC.	50	Concession	Iran
	Mobil Oil Corp.		1,500 sq. mi.	(offshore)
	NATIONAL IRANIAN OIL CO.	50		
	Iranian government co.			
44	MOBIL OIL IRAN, INC.	16.67	Concession	Iran
	Mobil Oil Corp.		3,088 sq. mi.	
	TEIJIN PETROCHEMICALS IND, LTD.	—a		
	Private Japanese capital			
	NORTH SUMATRA OIL DEVELOPMENT CORP.	—a		
	Private Japanese capital			
	MITSUI BUSSAN KAISHA, LTD.	—a		
	Private Japanese capital			
	MITSUBISHI SHOJI KAISHA, LTD.	—a		
	Private Japanese capital			
	NATIONAL IRANIAN OIL CO.	50		
	Iranian government co.			

SOURCE: Data compiled from World Oil, 1957-1971, The Oil and Gas Journal, 1957-1971, International Petroleum Register, 1966-67, Eastern Hemisphere Petroleum Directory, 1971-72, USA Oil Directory, 1972, and Aramco Handbook, 1968.

[a]Percent ownership not available.

[b]Ownership percentages do not add to 100, due to rounding.

TABLE A9

JOINT VENTURES IN EXPLORATION AND DRILLING
BY KIND OF ACTIVITY, NORTH SEA, 1957-1971

Venture Number	Participants	Ownership, Percent	Kind of Activity	Area
1	N.V. NEDERLANDSE AARODLIE MAATSCHAPPIJ ..	100	Exploration, Concession, (13 blocks) Drilling	Netherlands
	Royal Dutch/Shell Group (50)			
	Esso A.G. (50)			
	Standard Oil Company (New Jersey)			
2	SHELL UK EXPLORATION & PRODUCTION, LTD. .	100	Exploration, Concession, (100 blocks) Drilling, Discovery	British & Scottish
	Royal Dutch/Shell Group (50)			
	Esso A.G. (50)			
	Standard Oil Company (New Jersey)			
3	ROYAL DUTCH/SHELL GROUP	33.3[a]	Exploration	British & Netherlands
	BRITISH PETROLEUM CO., LTD.	33.3		
	ESSO A.G.	33.3		
	Standard Oil Company (New Jersey)			
4	N.V. NEDERLANDSE AARODLIE MAATSCHAPPIJ ..	66.7	Concession, (8 blocks)	Netherlands
	Royal Dutch/Shell Group (50)			
	Esso A.G. (50)			
	Standard Oil Company (New Jersey)			
	MOBIL NORTH SEA, LTD.	33.3		
	Mobil Oil Corp.			
5	N.V. NEDERLANDSE AARODLIE MAATSCHAPPIJ ..	50	Concession,	Netherlands

(continued)

TABLE A9 (Continued)

Venture Number	Participants	Ownership, Percent	Kind of Activity	Area
	Royal Dutch/Shell Group (50)		(4 blocks)	
	Esso A.G. (50)		Drilling	
	Standard Oil Company (New Jersey)			
	SIGNAL OIL GROUP	50		
	Signal (Netherlands) Petroleum Co.			
	The Signal Companies, Inc.			
	Marathon Petroleum Netherlands, Ltd.			
	Marathon Oil Co.			
	Cities Service Co.			
	Houma Petroleum, Ltd.			
	N.V. Oranie-Nassua Mijnen			
6	N.V. NEDERLANDSE AARODLIE MAATSCHAPPIJ ..	51	Exploration,	Netherlands
	Royal Dutch/Shell Group (50)		Concession,	
	Esso A.G. (50)		(1 block)	
	Standard Oil Company (New Jersey)		Drilling,	
	SYRACUSE GROUP	49	Discovery	
	Syracuse Oils Ltd. of Canada			
	Pan Ocean Oil Corp.			
	Catawaba Corp.			
	Denmark Norske Credit Bank			
	Saratoga Mining, Ltd.			
	Zapata-C. & K.			
7	AMERICAN OVERSEAS PETROLEUM, LTD.	100	Exploration,	Netherlands
	Caltex Group of Companies		Concession,	& British
	Standard Oil Company of California (50)		(27 blocks)	
	Texaco, Inc. (50)		Drilling	

(continued)

TABLE A9 (Continued)

Venture Number	Participants	Ownership, Percent	Kind of Activity	Area
8	DANSK UNDERGROUND CONSORTIUM (DUC)	100	Exploration, Concession, (entirety) Drilling, Discovery	Danish
	A.P. Moller Companies (25)			
	Gulf Oil Company of Denmark (30)			
	Gulf Oil Corp.			
	Shell Denmark, Ltd. (30)			
	Royal Dutch/Shell Group			
	California Oil Company of Denmark(7.5)			
	Standard Oil Company of California			
	Texaco Denmark, Inc. (7.5)			
	Texaco, Inc.			
9	AMERICAN OVERSEAS PETROLEUM, LTD.	__b	Exploration	Netherlands & British
	Caltex Group of Companies			
	Standard Oil Company of California (50)			
	Texaco, Inc. (50)			
	GULF OIL (GREAT BRITAIN), LTD.	__b		
	Gulf Oil Corp.			
	MOBIL OIL NORTH SEA, LTD.	__b		
	Mobil Oil Corp.			
10	AMERICAN OVERSEAS PETROLEUM, LTD.	50	Concession, (11 blocks) Drilling	Norway
	Caltex Group of Companies			
	Standard Oil Company of California (50)			
	Texaco, Inc. (50)			
	CONTINENTAL OIL COMPANY OF NORWAY	50		
	Continental Oil Co.			

(continued)

TABLE A9 (Continued)

Venture Number	Participants	Ownership, Percent	Kind of Activity	Area
11	GULF OIL (NEDERLAND) N.V.	50	Exploration, Concession, (7 blocks) Drilling	Netherlands
	Gulf Oil Corp.			
	BP EXPLORATION NEDERLANDS N.V.	50		
	British Petroleum Co., Ltd.			
12	GULF OIL (GREAT BRITAIN), LTD.	50	Concession (10 blocks)	Irish
	Gulf Oil Corp.			
	CONTINENTAL OIL COMPANY (UK), LTD.	40		
	Continental Oil Co.			
	NATIONAL COAL BOARD EXPLORATION, LTD. ..	10		
	British government agency			
13	GULF OIL (GREAT BRITAIN), LTD.	40	Concession , (10 blocks) Drilling, Discovery	British
	Gulf Oil Corp.			
	NATIONAL COAL BOARD EXPLORATION, LTD. ..	60		
	British government agency			
14	NORWEGIAN GULF OIL PRODUCING CO.	50	Concession (6 blocks)	Norway
	Gulf Oil Corp.			
	CONTINENTAL OIL COMPANY OF NORWAY	50		
	Continental Oil Co.			
15	BP PETROLEUM DEVELOPMENT, LTD.	50	Concession (1 block)	British
	British Petroleum Co.			
	DEMINEX (LONDON), LTD.	50		
	Gelsenkirchener Bergwerks (GBAG) (18.5)			
	Veba-Chimie (18.5)			

(continued)

TABLE A9 (Continued)

Venture Number	Participants	Ownership, Percent	Kind of Activity	Area
	Badische Anilin-und Sodafabrik (BASF) (18.5) Union Rhenische Braunkohlen Kraftstoff (13.5) Deutsche Schachtbau-und Tiefbohrges (10) Saarbergwerk (9) Preussische Bergwerks-und Huetten A.G. (7) C. Dielmann Bergbau G. MbH. (14.0)			
16	MOBIL PRODUCING NORTH SEA LTD. ..... Mobil Oil Corp. CONTINENTAL OIL COMPANY OF ENGLAND ..... Continental Oil Co.	50 50	Drilling	British
17	C. DEILMAN BERGBAU G.m.b.H. ..... AMOCO HANSEATIC PETROLEUM ..... American International Oil Co. Standard Oil Company (Indiana) DEUTSCHE TEXACO, A.G. ..... Texaco, Inc. (96.8) GEWERSCHAFT BRIGITTA ..... Deutsche Shell A.G. (50) Royal Dutch/Shell Group Esso A.G. (50) Standard Oil Company (New Jersey) GEWERSCHAFT ELWERATH	b b b b b	Concession, (7/8 of German, N.S.) Drilling	German

(continued)

TABLE A9 (Continued)

Venture Number	Participants	Ownership, Percent	Kind of Activity	Area
	Deutsche Shell A.G. (50)			
	Royal Dutch/Shell Group			
	Esso A.G. (50)			
	Standard Oil Company (New Jersey)			
	BADISCHE ANILIN-UND SODAFABRIK (BASF) ..	b		
	UNIPETROL	b		
	Preussische Bergwerks und Huetten A.G. (50)			
	Badische Annilin-und Sodafabrik (BASF) (50)			
	GELSENKIRCHEN BERGWERKS A.G. (GELSENBERG A.G.)	b		
	AMPHITRITE ERDOEL	b		
	Societe de Participations Petrolieres			
	Elf/Erap (86.66)			
	French government agency			
	Caisse des Depots et Consignations (12.12)			
	Others (1.22)			
	DEUTSCHE SCHACHTBAU-UND TIEFBOHRGESELLSCHAFT MbH.	b		
	CALIFORNIA OIL DEUTSCHLAND (G.MbH)	b		
	Standard Oil Company of California			
18	CONTINENTAL OIL COMPANY OF ENGLAND	50	Exploration, Concession, (9 blocks)	Scottish & British
	Continental Oil Co.			
	NATIONAL COAL BOARD EXPLORATION, LTD. ..	50		

(continued)

TABLE A9 (Continued)

Venture Number	Participants	Ownership, Percent	Kind of Activity	Area
	British government agency		Drilling, Discovery	
19	CONTINENTAL NETHERLANDS OIL CO.	50	Concession, (4 blocks)	Netherlands
	Continental Oil Co.			
	DOW CHEMICAL COMPANY INTERNATIONAL	50		
	Dow Chemical Co.			
20	CONTINENTAL-PETROFINA GROUP	100	Concession, 187 sq. mi. Drilling	German
	Continental Oil Co.			
	Petrofina, S.A.			
	Agip S.p.A.			
	Ente Nazionale Idrocarburi (ENI)(84)			
	Italian government co.			
	Others (16)			
	Phillips Petroleum Co.			
	Itag			
21	ARPET GROUP	100	Concession, (30 blocks) Drilling, Discovery	British
	Arpet Petroleum, Ltd.			
	Atlantic Richfield Co.			
	North Sea Exploitation & Research Co.			
	Union Reinische Braunkohlen			
	Kraftstoff A.G.			
	British Sun Oil Co.			
	Sun Oil Co.			
	Superior Oil (U.K.), Ltd.			

(continued)

TABLE A9 (Continued)

Venture Number	Participants	Ownership, Percent	Kind of Activity	Area
	Superior Oil Co. Canadian Superior Oil (U.K.), Ltd. Superior Oil Co.			
22	ARCO GROUP ..... Richfield Netherlands Petroleum Co. Atlantic Richfield Co. Sinclair Netherlands Oil Co. Atlantic Richfield Co. Noordzee Sun Oil Co. Sun Oil Co. Netherlands North Sea Superior Oil,Ltd. Superior Oil Co. Canadian Superior Oil (Nederland) Superior Oil Co. Union Rheinische Nederland N.V.	100	Concession (1 block)	Netherlands
23	PHILLIPS PETROLEUM GROUP ..... Phillips Exploration (U.K.), Ltd. (35) Phillips Petroleum Co. Fina Exploration (U.K.), Ltd. (30) Petrofina, S.A. Agip Exploration (U.K.), Ltd. (15) Agip S.p.A. Ente Nazionale Idrocarburi (84) Italian government co. Others (16)	100	Concession, (24 blocks) Drilling, Discovery	British

(continued)

TABLE A9 (Continued)

Venture Number	Participants	Ownership, Percent	Kind of Activity	Area
	British Bank Syndicate (20) Courtaulds, Ltd. Imperial Continental Gas Assoc. Minerial Seperation, Ltd. Oil Exploration, Ltd. Ionian Bank (for private investors) Tarmac, Ltd.			
24	PHILLIPS-FINA GROUP (1) ..... Phillips Exploration (U.K.), Ltd. Phillips Petroleum Co. Fina Exploration (U.K.), Ltd. Petrofina, S.A. Agip Exploration (U.K.), Ltd. Agip S.p.A. Ente Nazionale Idrocarburi (84) Italian government co. Others (16) BP Petroleum Development Co. British Petroleum Co., Ltd. Century Power and Light, Ltd. British Electric Traction Co. Ultramar	100	Concession (9 blocks)	British
25	PHILLIPS-FINA GROUP (2) ..... Phillips Exploration (U.K.), Ltd. (35) Phillips Petroleum Co.	100	Exploration, Concession, (7 blocks)	British

(continued)

TABLE A9 (Continued)

Venture Number	Participants	Ownership, Percent	Kind of Activity	Area
	Agip (U.K.), Ltd. (15)		Drilling,	
	Agip S.p.A.		Discovery	
	Ente Nazionale Idrocarburi (84)			
	Italian government co.			
	Others (16)			
	Fina Exploration, Ltd. (30)			
	Petrofina, S.A.			
	Century Power and Light, Ltd. (7.22			
	Halkyn District United Mines, Ltd. (4.26)			
	Oil Exploration, Ltd. (4.26)			
	Ionian Bank (for private investors)			
	Plascom (4.26)			
26	PHILLIPS-FINA GROUP (3)	100	Concession (1 block)	British
	Phillips Exploration (U.K.), Ltd.			
	Phillips Petroleum Co.			
	Fina Exploration (U.K.), Ltd.			
	Petrofina, S.A.			
	Agip Exploration (U.K.), Ltd.			
	Agip S.p.A.			
	Ente Nazionale Idrocarburi (84)			
	Italian government co.			
	Others (16)			
	Century Power and Light, Ltd.			
	Halkyn District Mines, Ltd.			
	Oil Exploration, Ltd.			

(continued)

TABLE A9 (Continued)

Venture Number	Participants	Ownership, Percent	Kind of Activity	Area
	Ionian Bank (for private investors)			
	Plascom			
	Arpet Petroleum, Ltd.			
	Atlantic Richfield Co.			
	British Sun Oil Co., Ltd.			
	Sun Oil Co.			
	North Sea Exploration & Research Co.			
	Union			
	Kraftstoff A.G.			
	Superior Oil (U.K.), Ltd.			
	Superior Oil Co.			
	Canadian Superior Oil (U.K.), Ltd.			
	Superior Oil Co.			
	Sinclair (U.K.), Ltd.			
	Atlantic Richfield Co.			
27	PHILLIPS GROUP	100	Concession (3 blocks)	Netherlands
	Phillips Petroleum Company Netherlands			
	Phillips Petroleum Co.			
	Petrofina Exploration Co.			
	Petrofina S.A.			
	Agip Nederland N.V.			
	Agip S.p.A.			
	Ente Nazionale Idrocarburi (84)			
	Italian government co.			
	Others (16)			

(continued)

TABLE A9 (Continued)

Venture Number	Participants	Ownership, Percent	Kind of Activity	Area
28	PHILLIPS PETROLEUM CO.	50	Concession	Netherlands
	AGIP NEDERLAND N.V.	50	(1 block)	
	Agip S.p.A.			
	Ente Nazionale Idrocarburi (84)			
	Italian government co.			
	Others (16)			
29	PHILLIPS PETROLEUM NORSKE A/S	100	Exploration,	Norway
	Phillips Petroleum Co. of Norway (36.96)		Concession, (11 blocks)	
	Phillips Petroleum Co.		Drilling,	
	Norske Fina (30)		Discovery,	
	Petrofina, S.A.		1 producing	
	Norske Agip (13.04)		field	
	Agip S.p.A.			
	Ente Nazionale Idrocarburi (84)			
	Italian government co.			
	Others (16)			
	Petronord A/S (20)			
	Norsk Hydro A.A. (20)			
	French Group (80)			
	Elf Norge A/S			
	Aquitaine Norge A/Sm			
	Societe Nationale Des Petroles d'Aquitaine (SNPA)			
	Elf/Erap (51)			
	French government agency			

(continued)

TABLE A9 (Continued)

Venture Number	Participants	Ownership, Percent	Kind of Activity	Area
	Norske Agip (5.22) Agip S.p.A. Ente Nazionale Idrocarburi (84) Italian government co. Others (16) Phillips Petroleum Norsk A/S (14.78) Phillips Petroleum Co. A/S Petronord Norsk Hydro A/S (20) French Group (80) Elf Norge A/S Aquitaine Norge A/S Societe Nationale des Petroles d'Aquitaine (SNPA) Elf/Erap (51) French government agency Compagnie Francaise des Petroles (CFP) (7.2) Total Marine Norsk Total Chimie Compagnie Francaise des Petroles (CFP) (50) French government (35) Others (65) Compagnie Francaise de Raffinage (50)			

(continued)

TABLE A9 (Continued)

Venture Number	Participants	Ownership, Percent	Kind of Activity	Area
	Compagnie Francaise des Pe Petroles (CFP) (7.2) French government (35) Others (65) Total Marine Norsk Total Chimie Compagnie Francaise des Petroles (CFP) (50) French government (35) Others (65) Compagnie Francaise de Raffinage (50) Societe de Recherches et d' Exploitation de Petrole French government agency Coparex Norge Compagnie de Participations des Recherches et d' Exploitation Petroliers (Coparex)			
30	A/S PETRONORD	100	Concession (12 blocks)	Norway
	Societe de Participations Petrolieres (5) Elf/Erap (86.66) French government agency Caisse des Depots et Consignations (12.12) Others (1.22)			

(continued)

TABLE A9 (Continued)

Venture Number	Participants	Ownership, Percent	Kind of Activity	Area
	Societe de Recherches et d' Exploitation de Petrole (Eurafrep) French government agency Comparex Norge Compagnie de Participations des Recherches et d'Exploitation Petroliers (Coparex)			
31	PHILLIPS PETROLEUM NORSK A/S (2) ..... Phillips Petroleum Norsk Phillips Petroleum Co. Norsk Fina A/S Petrofina S.A. Norsk Agip Agip S.p.A. Ente Nazionale Idrocarburi (84) Italian government co. Others (16)	100	Concession, (1 block)	Norway
32	A/S PETRONORD (2) ..... French Group (86.4) Elf Norge A/S Aquitaine Norge A/S Societe Nationale des Petroles d' Aquitaine (SNPA) Elf/Erap (51) French government agency	100	Concession, (4 blocks) Drilling, Discovery	Norway

(continued)

TABLE A9 (Continued)

Venture Number	Participants	Ownership, Percent	Kind of Activity	Area
	Compagnie Francaise des Petroles (CFP) (7.2)			
	French government (35)			
	Others (65)			
	Others (41.8)			
	Total Marine Norsk			
	Total Chimie			
	Compagnie Francaise des Petroles (CFP) (50)			
	French government (35)			
	Others (65)			
	Compagnie Francaise de Raffinage (50)			
	Societe de Recherches et d'Exploitation			
	Exploitation de Petrole (Eurafrep)			
	Coparex Norge			
	Compagnie de Participations des Recherches et d'Exploitation Petroliers (Coparex)			
	Norsk Hydro A/S (13.6)			
33	PETROLAND GROUP	100	Exploration, Concession, (8 blocks) Drilling, Discovery	Netherlands
	Elf/Erap			
	French government agency			
	Societe Nationale des Petroles d' Aquitaine (SNPA)			
	Elf/Erap (51)			

(continued)

TABLE A9 (Continued)

Venture Number	Participants	Ownership, Percent	Kind of Activity	Area
	French government agency Compagnie Francaise des Petroles (CFP) (7.2) French government (35) Others (65) Others (41.8) Compagnie Francaise des Petroles (CFP) French government (35) Others (65) Societe de Recherches et d'Exploitation de Petrole (Eurafrep) French government agency Compagnie de Participations des Rocherches et d'Exploitation Petrolieres Compagnie Franco-Africaine de Recherches Petrolieres (Francarep)			
34	BURMAH NORTH SEA GROUP Burmah Oil Exploration Co. (40) Burmah Oil Co., Ltd. Imperial Chemical Industries, Ltd. (40) Murphy Petroleum Co. (7.5) Murphy Oil Corp. Ocean Drilling and Exploration Co. (7.5) Murphy Oil Corp. (51) Burmah Oil Exploration Co. (24.5) Burmah Oil Co., Ltd.	100	Concession, (17 blocks) Drilling	Scottish & British

(continued)

TABLE A9 (Continued)

Venture Number	Participants	Ownership, Percent	Kind of Activity	Area
	Imperial Cehmical Industries, Ltd. (24.5) A. Johnson Exploration (5) Rederiaktiebolaget Nordstjernan AB Nynas-Petroleum			
35	BURMAH-TOTAL GROUP ..... Burmah Oil Exploration Co. Burmah Oil Co., Ltd. (27.5) Imperial Chemical Industries (27.5) Murphy Petroleum Co. (7.5) Murphy Oil Corp. Ocean Drilling and Exploration Co.(7.5) Murphy Oil Corp. (51) Burmah Oil Exploration Co. (24.5) Burmah Oil Co., Ltd. Imperial Chemical Industries, Ltd. (24.5) A. Johnson Exploration (5) Rederiaktiebolaget Nordstjernan AB Nynas-Petroleum Total Group (25) Total Oil Marine, Ltd. Compagnie Francaise des Petroles (CFP) French government (35) Others (65)	100	Concession, (7 blocks)	British

(continued)

TABLE A9 (Continued)

Venture Number	Participants	Ownership, Percent	Kind of Activity	Area
	Coastal Oil Co., Ltd. Auxirap (U.K.), Ltd. Societe Auxiliare de la Regie Autonome des Petroles (Auxirap) Elf/Erap French government agency Societe de Recherches et d' Exploitation de Petrole (Eurafrep) French government agency Confrasea Oil Co., Ltd. Coparex North Sea Petroleum Co., Ltd. Compagnie de Participations des Recherches et d'Exploitation Petrolieres (Coparex)			
36	PLACE OIL GROUP	50	Concession, (10 blocks) Drilling	British
	Place Oil & Gas (U.K.), Ltd. Noranda Mines, Ltd. Husky Exploration, Ltd. Husky Oil Co. Kerr Addison Mines, Ltd.			
	BURMAH HUMBER GROUP	50		
	Burmah Oil Exploration Co., Ltd. Burmah Oil Co., Ltd. Imperial Chemical Industries, Ltd. Gulf Oil (Great Britain), Ltd. Gulf Oil Corp.			

(continued)

TABLE A9 (Continued)

Venture Number	Participants	Ownership, Percent	Kind of Activity	Area
	North Sea Ventures, Ltd. Trinidad Canadian Oils, Ltd. Amax Petroleum (U.K.), Ltd. American Metal Climax, Inc. North Sea Selection Co., Ltd. Selection Trust, Ltd. Falcon Seaboard, Ltd. Falcon Seaboard, Inc.			
37	TOTAL OIL MARINE GROUP ..... Total Oil Marine, Ltd. Compagnie Francaise des Petroles (CFP) French government (35) Others (65) Coastal Oil Co., Ltd. Auxirap (U.K.), Ltd. Societe Auxiliare de la Regie Autonome des Petroles (Auxirap) Elf/Erap French government agency Societe de Recherches et d'Exploitation de Petrole (Eurafrep) French government agency Confrasea Oil Co., Ltd. Coparex North Sea Petroleum Co., Ltd. Compagnie de Participations des Recherches et d'Exploitation Petrolieres (Coparex)	100	Concession, (24 blocks) Drilling	British

(continued)

TABLE A9 (Continued)

Venture Number	Participants	Ownership, Percent	Kind of Activity	Area
38	NORTH SEA SELECTION GROUP	100	Concession (11 blocks)	British
	Amax Petroleum (U.K.), Ltd.			
	Amax Petroleum Corp.			
	American Metal Climax, Inc.			
	Falcon Seaboard, Ltd.			
	Falcon Seaboard, Inc.			
	North Sea Selection Co.			
	Selection Trust, Ltd.			
	Total Oil Marine, Ltd.			
	Compagnie Francaise des Petroles (CFP)			
	French government (35)			
	Others (65)			
	Elf/Erap			
	French government agency			
	Societe Nationale des Petroles d' Aquitaine (SNPA)			
	Elf/Erap (51)			
	French government agency			
	Compagnie Francaise des Petroles (CFP) (7.2)			
	French government (35)			
	Others (65)			
	Others (41.8)			
39	SIGNAL OIL AND GAS GROUP (1)	100	Concession (3 blocks)	British
	Signal Oil and Gas Co., Ltd.			
	The Signal Companies, Inc.			

(continued)

TABLE A9 (Continued)

Venture Number	Participants	Ownership, Percent	Kind of Activity	Area
	Marathon Petroleum North Sea (Great Britain), Ltd. Marathon Oil Co.			
40	SIGNAL OIL AND GAS GROUP (2) ..... Signal Oil and Gas Co., Ltd. (25) The Signal Companies, Inc. Marathon Petroleum North Sea (Great Britain), Ltd. Marathon Oil Co. Cities Service (U.K.), Ltd. (25) Cities Service Co. Richfield U.K. Petroleum, Ltd. (25) ARCO British, Ltd. Atlantic Richfield Co.	100	Concession, (7 blocks) Drilling	British
41	SIGNAL GROUP ..... Signal (Netherlands) Petroleum Co. The Signal Companies, Inc. Marathon Petroleum Netherlands, Ltd. Marathon Oil Co. Netherlands Cities Service, Inc. Cities Service Co. Houma Petroleum Ltd. N.V. Oranje-Nassua Mijnen	100	Concession, (4 blocks) Drilling	Netherlands
42	THE GAS COUNCIL/AMOCO GROUP ..... British Gas Council (31)	100	Concession, (58 blocks)	British

(continued)

TABLE A9 (Continued)

Venture Number	Participants	Ownership, Percent	Kind of Activity	Area
	United Kingdom Agency Amoco U.K. Petroleum, Ltd. (31) Standard Oil Company (Indiana) Amerada Exploration, Ltd. (23) Amerada-Hess Corp. Texas Eastern (U.K.), Ltd. (15) Texas Eastern Transmission Corp.		Drilling, Discovery	
43	AMOCO GROUP ..... Amoco Netherlands Petroleum Co. Standard Oil Company (Indiana) Exploratie-en Produktie Mij. Dynas N.V. Gelsenkirchener Bergwerks A.G. (GBAG)	100	Concession (7 blocks)	Netherlands
44	AMOCO/NOCO GROUP ..... Amoco Norway Oil Co. Standard Oil Company (Indiana) Amerada Petroleum Corporation of Norway Amerada-Hess Corp. Texas Eastern Transmission Corp. Norwegian Consortium A/S & Co. Exploratie-en Produktie Mij. Dynas N.V. Gelsenkirchener Bergwerks A.G. (GBAG)	100	Concession, (12 blocks) Drilling, Discovery	Norway
45	RIO TINTO/HAMILTON GROUP ..... Hamilton Brothers Oil Co. (G.B.) (48)	100	Concession, (15 blocks)	British

(continued)

TABLE A9 (Continued)

Venture Number	Participants	Ownership, Percent	Kind of Activity	Area
	Hamilton Brothers Petroleum Corp. (U.K.) (12) Rio Tinto-Zinc Corp. (25) Blackfriars Oil Co. (12.5) Associated Newspapers Kleinwort Benson Trans-European Oil Co. (2.5) British Merchant Bankers		Drilling	
46	RIO TINTO/HAMILTON GROUP (50) ..... Hamilton Brothers Oil Co. (G.B.) (48) Hamilton Brothers Petroleum Corp. (U.K.) (12) Rio Tinto-Zinc Corp. (25) Blackfriars Oil Co. (12.5) Associated Newspapers Kleinwort Benson Trans-European Oil Co. (2.5) British Merchant Bankers	50	Concession, (3 blocks) Drilling, Discovery	British
	BRITISH PETROLEUM CO., LTD.	50		
47	NOORWINNING GROUP ..... Amax Petroleum Corp. American Metal Climax Penzoil United, Inc. Falcon Seaboard Drilling Co. Falcon Seaboard Inc. Badische Anilin-und Sodafabrik (BASF)	100	Concession, (7 blocks) Drilling	Netherlands

(continued)

TABLE A9 (Continued)

Venture Number	Participants	Ownership, Percent	Kind of Activity	Area
	Knonklijke Nederlandsche Hoogovens En Staalfabrieken N.V. N.V. Billiton Maatschappij Selection Trust, Ltd.			
48	TENNECO GROUP ..... Tenneco Netherlands, Inc. (33.33) Tenneco, Inc. Monoil Netherlands, Inc. (33.33) Monsanto Co. Ethyl Netherlands, Inc. (16.66) Ethyl Corp. Standard Oil Company (New Jersey) (50) General Motors Corp. (50) Laura & Vereeniging (8.33) Agip S.p.A. (8.33) Ente Nazionale Idrocarburi (84) Italian government company Others (16)	100	Concession, (1 block) Drilling, Discovery	Netherlands
49	MURPHY GROUP ..... Norske Murphy Oil Co. Murphy Oil Corp. Norske Ocean Exploration Co. Ocean Drilling & Exploration Co. Murphy Oil Corp. (51) Burmah Oil Exploration Co. (24.5)	100	Concession, (4 blocks) Drilling	Norway

(continued)

TABLE A9 (Continued)

Venture Number	Participants	Ownership, Percent	Kind of Activity	Area
	Burmah Oil Co., Ltd. Imperial Chemical Industries, Ltd. (24.5) Pennzoil Norge Pennzoil United, Inc. Badische Anilin-und Sodafabrik (BASF) Amax Petroleum Norge A/S American Metal Climax, Inc. A/S Polaris Oil Consortium			
50	UNION OIL COMPANY OF NETHERLANDS ..... Union Oil Company of California STOOMVAART M. NEDERLAND	80 20	Exploration, Concession, (7 blocks)	Netherlands
51	VEBA-CHEMIE A.G. ..... RUHRGAS A.G. ..... BRITISH PETROLEUM CO., LTD. ..... DEUTSCHE TEXACO, INC. ..... Texaco, Inc. CHEVRON OIL EUROPE, INC. ..... Standard Oil Company of California	b b b b b	Exploration	German

SOURCE: Data compiled from World Oil, 1957-1971, The Oil and Gas Journal, 1957-1971, International Petroleum Register, 1966-67, Eastern Hemisphere Petroleum Directory, 1971-72, USA Oil Directory, 1972.

(continued)

[a]Ownership percentages do not add to 100, due to rounding.

[b]Percent ownership not available.

TABLE A10

JOINT VENTURES IN EXPLORATION AND DRILLING, BY KIND OF ACTIVITY, SOUTH AMERICA, 1957-1971

Venture Number	Participants	Ownership, Percent	Kind of Activity	Area
1	CONTINENTAL OIL COMPANY OF ARGENTINA, S.A. Continental Oil Co. MARATHON PETROLEUM ARGENTINA, LTD. ..... Marathon Oil Co.	50 50	Concession, Drilling	Argentina
2	AMOCO ARGENTINA OIL CO. ..... Standard Oil Company (Indiana) YACIMIENTOS PETROLIFEROS FISCALES (YPF) .. Argentina government co.	—a —a	Exploration, Concession, Drilling, Discovery	Argentina
3	UNION OIL EXPLORATION AND PRODUCTION CO. . Union Oil Company of California CONTINENTAL OIL COMPANY OF ARGENTINA ..... Continental Oil Co.	50 50	Concession, Drilling	Argentina (offshore) Samborombon Bay
4	MARATHON PETROLEUM ARGENTINA, LTD. ..... Marathon Oil Co. AMERADA PETROLEUM CORPORATION OF ARGENTINA Amerada-Hess Corp. ARGENTINA SUN OIL CO. ..... Sun Oil Co.	—a —a —a	Concession, 3,570 sq. mi. Drilling	Argentina (offshore)
5	SIGNAL PETROLEUM COMPANY OF ARGENTINA .... The Signal Companies, Inc.	50	Exploration, Concession	Argentina

(continued)

TABLE A10 (Continued)

Venture Number	Participants	Ownership, Percent	Kind of Activity	Area
	AMOCO ARGENTINA EXPLORATION CO.	50	4,340 sq. mi.	
	American International Oil Co.			
	Standard Oil Company (Indiana)			
6	PHILLIPS PETROLEUM INTERNATIONAL			
	ARGENTINA, INC.	__a	Concession,	Argentina
	Phillips Petroleum Co.		6,600 sq. mi.	(offshore)
	AGIP, S.P.A.	__a	Drilling,	Gulf of
	Ente Nazionale Idrocarburi (ENI) (84)		Discovery	San Jorge
	Italian government co.			
	Others (16)			
	TENNECO OIL CO.	__a		
	Tenneco, Inc.			
7	PHILLIPS PETROLEUM INTERNATIONAL			
	ARGENTINA, INC.	__a	Concession	Argentina
	Phillips Petroleum Co.			(offshore)
	AGIP, S.P.A.	__a		
	Ente Nazionale Idrocarburi (ENI) (84)			
	Italian government co.			
	Others (16)			
8	ARGENTINA CITIES SERVICE DEVELOPMENT CO..	__a	Concession	Argentina
	Cities Service Co.		1,448 sq. mi.	
	ARGENTINA SUN OIL CO.	__a		
	Sun Oil Co.			
	AMERADA PETROLEUM ARGENTINA, LTD.	__a		

(continued)

TABLE A10 (Continued)

Venture Number	Participants	Ownership, Percent	Kind of Activity	Area
	Amerada-Hess Corp.			
	UNION OIL EXPLORATION AND PRODUCTION CO...	__a		
	Union Oil Company of California			
	SIGNAL PETROLEUM COMPANY DE ARGENTINA	__a		
	The Signal Companies, Inc.			
9	BOLIVIAN GULF OIL CO.	50	Concession, Drilling	Bolivia
	Gulf Oil Corp.			
	YACIMENTOS PETROLIFFROS FISCALES BOLIVIANOS (YPFB)	50		
	Bolivian government co.			
10	CHEVRON OIL LATIN AMERICA, INC.	50	Concession, Drilling	Bolivia
	Standard Oil Company of California			
	COMPANA PETROLERA BOLIVIANA SHELL, LTD. ..	50		
	Royal Dutch/Shell Group			
11	SUNRAY COLOMBIA OIL CO.	50	Concession 1,172 sq. mi.	Colombia (Sinu Area)
	Sun Oil Co.			
	MOBIL OIL COMPANY DE COLOMBIA	25		
	Mobil Oil Corp.			
	INTERNATIONAL PETROLEUM (COLOMBIA), LTD. .	25		
	International Oil Co., Inc.			
	Esso Standard (Inter-America), Inc. (99.77)			
	Standard Oil Company (New Jersey)			

(continued)

TABLE A10 (Continued)

Venture Number	Participants	Ownership, Percent	Kind of Activity	Area
12	COLOMBIAN PETROLEUM CO.	100	Concession, Drilling, Discovery, 1 producing field	Northern Colombia
	Texaco, Inc. (50)			
	Mobil Oil Corp. (50)			
13	INTERNATIONAL OIL COMPANY (COLOMBIA), INC.	__a	Concession 3,861 sq. mi.	Colombia
	International Oil Co., Inc.			
	Esso Standard (Inter-America), Inc. (99.77)			
	Standard Oil Company (New Jersey)			
	CONTINENTAL OIL COMPANY OF COLOMBIA	__a		
	Continental Oil Co.			
	THE SUPERIOR OIL COMPANY OF COLOMBIA	__a		
	The Superior Oil Co.			
	SINGARD PETROLEUM CO.	__a		
	Royal Dutch/Shell Group			
	BP EXPLORATION COMPANY (COLOMBIA), LTD. .	__a		
	British Petroleum Co., Ltd.			
	EMPRESA COLOMBIANA DE PETROLEOS	__a		
	Colombian government co.			
14	PAN AMERICAN VENEZUELAN OIL CO.	25	Concession, 115 sq. mi.	Colombia
	Standard Oil Company (Indiana)			
	SINCLAIR VENEZUELAN OIL CO.	25	Drilling, Discovery,	
	Atlantic Richfield Co.			
	COLOMBIA CITIES SERVICE PETROLEUM CO. ...	25	1 producing	

(continued)

TABLE A10 (Continued)

Venture Number	Participants	Ownership, Percent	Kind of Activity	Area
	Cities Service Co.		field	
	EMPRESA COLOMBIANA DE PETROLEOS	25		
	Colombian government co.			
15	INTERNATIONAL PETROLEUM CO. (COLOMBIA) ..	50	Concession, 1,093 sq. mi. Drilling, Discovery, 1 producing field	Colombia
	International Petroleum Co., Ltd.			
	Esso Standard (Inter-America), Inc. (99.77)			
	Standard Oil Company (New Jersey)			
	BP EXPLORATION (COLOUMBIA), LTD.	25		
	British Petroleum Co., Ltd.			
	SINCLAIR COLOMBIAN OIL CO.	25		
	Atlantic Richfield Co.			
16	COLOMBIAN GULF OIL CO.	50	Exploration, Concession, 2,934 sq. mi. Drilling	Colombia (offshore)
	Gulf Oil Corp.			
	COLOMBIA OIL CO., LTD.	50		
	Mitsui Oil Exploration Co., Ltd.			
	Mitsui & Co.			
	Alaskan Petroleum Development Co.			
	Teikoku Oil Co., Ltd.			
	Teijin, Ltd.			
17	COLOMBIAN GULF OIL CO.	50	Concession, 4,497 sq. mi. Drilling, Discovery, (2)[b]	Southern Colombia
	Gulf Oil Corp.			
	TEXAS PETROLEUM CO.	50		
	Texaco, Inc.			

(continued)

TABLE A10 (Continued)

Venture Number	Participants	Ownership, Percent	Kind of Activity	Area
			1 producing field	
18	SHELL COLMBIA S.A.	25	Concession, 2,031 sq. mi.	Colombia
	Royal Dutch/Shell Group			
	CONTINENTAL OIL COMPANY OF COLOMBIA	25	Drilling	
	Continental Oil Co.			
	EMPRESA COLOMBIANA DE PETROLEOS	50		
	Colombian government co.			
19	TEXAS PETROLEUM CO.	__a	Exploration, Exploration	Colombia Colombia (offshore) Gulf of Morosquillo
	Texaco, Inc.			
	EMPRESA COLOMBIANA DE PETROLEOS	__a		
	Colombiana government co.			
20	MARATHON PETROLEUM COLOMBIA, LTD.	50	Concession, 1,600 sq. mi.	Colombia
	Marathon Oil Co.			
	DELHI INTERNATIONAL OIL CORP.	__a	Drilling	
	HAMILTON BROTHERS OIL CO.	__a		
	HAMILTON BROTHERS PETROLEUM CORP.	__a		
	PAN OCEAN OIL CORP.	__a		
	Catawaba Corp.			
	CHIEFTAIN DEVELOPMENT CO., LTD.	__a		
	BLUE CROWN PETROLEUM, LTD.	__a		
21	PAN OCEAN OIL CORP.	25	Concession	Colombia

(continued)

TABLE A10 (Continued)

Venture Number	Participants	Ownership, Percent	Kind of Activity	Area
	Catawaba Corp.		721 sq. mi.	
	EMPRESA COLOMBIANA DE PETROLEOS ..... Colombia government co.	75		
22	PHILLIPS PETROLEUM CO.	50	Concession,	Colombia
	SUNRAY COLOMBIA OIL CO. ..... Sun Oil Co.	50	191 sq. mi. Drilling	
23	SUNRAY COLOMBIA OIL CO. ..... Sun Oil Co.	50	Concession 2,513 sq. mi.	Colombia (on and offshore)
	THE SUPERIOR OIL COMPANY OF COLOMBIA .... The Superior Oil Co.	50		
24	MARATHON PETROLEUM ECUADORIAN, LTD. ..... Marathon Oil Co.	33.3[c]	Concession 1,535 sq. mi.	Ecuador
	SHENANDOAH ECUADORIAN ..... Shenandoah Oil Co.	33.3		
	READING AND BATES OFFSHORE DRILLING CO. .	33.3		
25	TEXAS OIL COMPANY OF ECUADOR ..... Texaco, Inc.	50	Concession, 5,468 sq. mi.	Ecuador
	GULF OIL OF ECUADOR ..... Gulf Oil Corp.	50	Drilling, Discovery, (3) 1 producing field	
26	CHEVRON OIL LATIN AMERICA, INC.	16.67	Exploration,	Ecuador

(continued)

TABLE A10 (Continued)

Venture Number	Participants	Ownership, Percent	Kind of Activity	Area
	Standard Oil Company of California		Concession,	
	ANGLO-ECUADORIAN OIL FIELDS, LTD.	16.67	10,000 sq. mi.	
	Burmah Oil Co., Ltd.		Drilling,	
	SUPERIOR PETROLEUM OF ECUADOR	33.33	Discovery.	
	The Superior Oil Co.		1 producing	
	UNION OIL EXPLORATION AND DEVELOPMENT CO.	33.33	field	
	Union Oil Company of California			
27	CONTINENTAL OIL COMPANY OF GUYANA	50	Concession,	Guyana
	Continental Oil Co.		16,000 sq. mi.	(offshore)
	TENNECO GUYANA, INC.	50	Drilling	
	Tenneco, Inc.			
28	CONTINENTAL OIL COMPANY OF GUYANA	25[c]	Concession	Guyana
	Continental Oil Co.		1,600 sq. mi.	(offshore)
	TENNECO GUYANA, INC.	25		
	Tenneco, Inc.			
	DEUTSCHE ERDOLVERSORGUNGSGESSELLSCHAFT			
	MBH (DEMINEX)	16.67		
	Veba-Chemie A.G. (18.5)			
	Deutsche Schachtbau-und			
	Tiefbohregesehschaft M.b.H. (10)			
	Gelsenberg A.G. (GBAG) (18.5)			
	Preussag A.G. (7)			
	Saarbergwerke A.G. (9)			
	Union Rheinische Braunkohlen			
	Kraftstoff A.G. (13.5)			
	Badische Anilin und Sodafabrik A.G.			
	(BASF) (18.5)			

(continued)

TABLE A10 (Continued)

Venture Number	Participants	Ownership, Percent	Kind of Activity	Area
	C. Dielman Co. (5)			
	ADA OIL COMPANY OF GUYANA	16.67		
	Ada Oil Co.			
	TEXAS PACIFIC OIL COMPANY OF GUYANA	16.67		
	Texas Pacific Oil Co.			
29	GUYANA SHELL, LTD.	50.0[c]	Concession, 3,950 sq. mi. Drilling	Guyana (offshore)
	Royal Dutch/Shell Group			
	DEUTSCHE ERDOLVERSORGUNGSGESSELLSCHAFT MBH (DEMINEX)	16.67		
	Veba-Chemie A.G. (18.5)			
	Deutsche Schachtbau-und Tiefbohregesehschaft M.b.H. (10)			
	Gelsenberg A.G. (GBAG) (18.5)			
	Preussag A.G. (7)			
	Saarbergwerke A.G. (9)			
	Union Rheinische Braunkohlen Kraftstoff A.G. (13.5)			
	Badische Anilin und Sodafabrik A.G. (BASF) (18.5)			
	C. Dielman Co. (5)			
	ADA OIL COMPANY OF GUYANA	16.67		
	Ada Oil Co.			
	TEXAS PACIFIC OIL COMPANY OF GUYANA	16.67		
	Texas Pacific Oil Co.			
30	PURE OIL COMPANY OF PARAGUAY, INC.	30	Concession,	Paraguay

(continued)

TABLE A10 (Continued)

Venture Number	Participants	Ownership, Percent	Kind of Activity	Area
	Union Oil Company of California		23,200 sq. mi.	
	WILLIAMS BROTHERS CORP.	20	Drilling	
	PARAGUAY GULF OIL CO.	25		
	Gulf Oil Co.			
	SINCLAIR PARAGUAVIAN OIL CO.	15		
	Atlantic Richfield Co.			
	TIDEWATER OIL CO.	10		
	Getty Oil Co.			
31	TENNECO OIL CO.	25	Concession,	Peru
	Tenneco, Inc.		3,872 sq. mi.	(offshore)
	UNION EXPLORATION AND DEVELOPMENT CORP. .	25	Concession	Peru
	Union Oil Company of California		1,610 sq. mi.	(offshore)
	PETROLEOS DEL PERU (PETROPERU)	50		
	Peruvian government co.			
32	TEXAS PETROLEUM CO.	66.67	Concession	Eastern
	Texaco, Inc.		1,875 sq. mi.	Peru
	COMPANA PERUANA DEL PETROLEO EL ORIENTE S.A.	33.33		
	Gewerkschaft Elwerath			
	Deutsche Shell A.G. (50)			
	Royal Dutch/Shell Group			
	Esso A.G. (50)			
	Standard Oil Company (New Jersey)			
	Deutsche Texaco, A.G.			
	Texaco, Inc.			
	Badische Anilin und Sodafabrik (BASF)			

(continued)

TABLE A10 (Continued)

Venture Number	Participants	Ownership, Percent	Kind of Activity	Area
	Private German capital			
33	PETROLEOS DEL PERU (PETROPERU)	50	Concession, 4,678 sq. mi.	Peru
	Peruvian government co.			
	OCCIDENTAL DEL PERU, INC.	50	Drilling	
	Occidental Petroleum Corp.			
34	OCCIDENTAL DEL PERU, INC.	50	Concession 3,215 sq. mi.	Peru (on and offshore)
	Occidental Petroleum Corp.			
	TEXACO PETROLEUM CO.	50		
	Texaco, Inc.			
35	MOBIL OIL COMPANY DEL PERU	__a	Concession, Drilling, Discovery	Northern Peru
	Mobil Oil Corp.			
	UNION OIL COMPANY OF PERU	__a		
	Union Oil Company of California			
	PERUVIAN OILS & MINERALS, LTD.	__a		
	Peruvian private capital			
36	COMPANIA PETROLERA LOBITOS	50	Concession, 1 producing field	Peru
	Private Peruvian capital			
	INTERNATIONAL PETROLEUM CO. (PERU)	50		
	Standard Oil Company (New Jersey)			
37	THE AGUAYTIA GROUP	100	Concession, Drilling, Discovery	Peru
	Mobil Oil Company del Peru			
	Mobil Oil Corp.			

(continued)

TABLE A10 (Continued)

Venture Number	Participants	Ownership, Percent	Kind of Activity	Area
	Peruvian Oils & Minerals, Ltd. Private Peruvian capital Cerro Crop. Compania Peruana del Petroleo "el Oriente" (50) Gewerkschaft Elwerath Deutsche Shell A.G. (50) Royal Dutch/Shell Group Esso A.G. (50) Standard Oil Company (New Jersey) Deutsche Texaco, A.G. Texaco, Inc. (97) Badische Anilin und Sodafabrik (BASF) Private German capital			
38	MENE GRANDE OIL CO. ..... Gulf Oil Corp. INTERNATIONAL PETROLEUM CO. (VENEZUELA).. Standard Oil Company (New Jersey) COMPANIA SHELL DE VENEZUELA, LTD. ..... Royal Dutch/Shell Group	50 25 25	Concession, (Block 6) Drilling, Discovery	Lake Maracaibo, Venezuela
39	CREOLE PETROLEUM CORP. ..... Standard Oil Company (New Jersey) MOBIL OIL COMPANY DE VENEZUELA ..... Mobil Oil Corp.	25 75	Farmout, 15,165 sq. mi. Drilling	Lake Maracaibo, Venezuela
40	MOBIL OIL COMPANY DE VENEZUELA	__a	Exploration,	Gulf of

(continued)

TABLE A10 (Continued)

Venture Number	Participants	Ownership, Percent	Kind of Activity	Area
	CREOLE PETROLEUM CORP.	__a		
	Standard Oil Company (New Jersey) (95)			
	MENE GRANDE OIL CO.	__a		
	Gulf Oil Co.			
	TEXACO MARACAIBO, INC.	__a		
	Texaco, Inc.			
	PAN AMERICAN VENEZUELA OIL CO.	__a		
	Standard Oil Company (Indiana)			
	VENEZUELAN ATLANTIC REFINING CO.	__a		
	Atlantic Richfield Co.			
	VENEZUELAN SUN OIL CO.	__a		
	Sun Oil Co.			
	UNION OIL EXPLORATION AND DEVELOPMENT CORP.	__a		
	Union Oil Company of California			
	ELF/ERAP	__a		
	French government agency			
	AGIP S.P.A.	__a		
	Ente Nazionale Idrocarburi (84)			
	Italian government co.			
	Others (16)			
	ZAPATA OFFSHORE, INC.	__a		
	CORPORACION VENZOLANA DEL PETROLEO	__a		
	Venezuelan government co.			
41	MOBIL OIL COMPANY DE VENEZUELA	__a	Exploration	Lake Maracaibo,

(continued)

TABLE A10 (Continued)

Venture Number	Participants	Ownership, Percent	Kind of Activity	Area
	Mobil Oil Corp.		7,700 sq. mi.	Venezuela
	COMPAGNIE SHELL DE VENEZUELA, LTD.	__a		
	Royal Dutch/Shell Group			
	MENE GRANDE OIL CO.	__a		
	Gulf Oil Corp.			
	TEXACO MARACAIBO, INC.	__a		
	Texaco, Inc.			
	COMPAGNIE SHELL DE VENEZUELA, LTD.	__a		
	Royal Dutch/Shell Group			
	CREOLE PETROLEUM CORP.	__a		
	Standard Oil Company (New Jersey) (95)			
	SINCLAIR VENEZUELAN OIL CO.	__a		
	Atlantic Richfield Co.			
	PHILLIPS PETROLEUM CO.	__a		
42	RICHMOND EXPLORATION CO.	__a	Exploration	Lake Maracaibo,
	Standard Oil Company of California			
	MOBIL OIL COMPANY DE VENEZUELA	__a		
	Mobil Oil Corp.			
	SINCLAIR OIL CO.	__a		
	Atlantic Richfield Co.			
	UNION OIL COMPANY OF CALIFORNIA	__a		
	PHILLIPS PETROLEUM CO.	__a		
	THE SIGNAL COMPANIES, INC.	__a		
	CONTINENTAL OIL CO.	__a		
	TEXACO, MARACAIBO, INC.	__a		
	Texaco, Inc.			

(continued)

TABLE A10 (Continued)

Venture Number	Participants	Ownership, Percent	Kind of Activity	Area
	MENE GRANDE OIL CO.	__a		
	Gulf Oil Corp.			
	SHARPLES OIL CO.	__a		
43	PARIA OPERATIONS, INC.	100	Concession, 231 sq. mi. Drilling, Discovery	Venezuela, Gulf of Paria
	Texas Petroleum Co. (25)			
	Texaco, Inc.			
	Continental Oil Company of Venezuela (25)			
	Continental Oil Co.			
	Marathon Petroleum Venezuela, Ltd. (25)			
	Marathon Oil Co.			
	Venezuela-Cities Service, Inc. (16.67)			
	Cities Service Co.			
	Sinclair Venezuelan Oil Co. (8.33)			
	Atlantic Richfield Co.			
44	TEXAS SEABOARD, INC.	10.0[c]	Concession, 38 sq. mi. (Block 12) Drilling, Discovery	Lake Maracaibo, Venezuela
	Texaco, Inc.			
	VENEZUELAN ATLANTIC REFINING CO.	33.3		
	Atlantic Richfield Co.			
	VENEZUELAN SUN OIL CO.	23.3		
	Sun Oil Co.			
	PAN AMERICAN VENEZUELA OIL CO.	33.3		
	Standard Oil Company (Indiana)			
45	TEXACO SEABOARD, INC.	33.3[c]	Concession 38 sq. mi.	Venezuela
	Texaco, Inc.			

(continued)

TABLE A10 (Continued)

Venture Number	Participants	Ownership, Percent	Kind of Activity	Area
	VENEZUELAN ATLANTIC REFINING CO.	33.3		
	Atlantic Richfield Co.			
	VENEZUELAN SUN OIL CO.	23.3		
	Sun Oil Co.			
	PAN AMERICAN VENEZUELA OIL CO.	10.0		
	Standard Oil Company (Indiana)			
46	TEXACO SEABOARD, INC.	10	Concession,	Lake
	Texaco, Inc.		35 sq. mi.	Maracaibo,
	VENEZUELAN SUN OIL CO.	45	(Block 1)	Venezuela
	Sun Oil Co.		Drilling,	
	VENEZUELAN ATLANTIC REFINING CO.	45	Discovery	
	Atlantic Richfield Co.			
47	VENEZUELAN ATLANTIC REFINING CO.	50	Concession,	Guanipu,
	Atlantic Richfield Co.		Drilling	Venezuela
	PAN COASTAL PETROLEUM CO.	50		
	Catawaba Corp.			
48	PHILLIPS PETROLEUM CO.	45	Concession,	Lake
	SAN JACINTO PETROLEUM CORP.	25	39 sq. mi.	Maracaibo,
	Continental Oil Co.		Drilling,	Venezuela
	VENEZUELAN SUN OIL CO.	10	Discovery	
	Sun Oil Co.			
	PACIFIC PETROLEUM, LTD.	5		
	Phillips Petroleum Co. (48)			
	MURPHY OIL CORP.	5		

(continued)

TABLE A10 (Continued)

Venture Number	Participants	Ownership, Percent	Kind of Activity	Area
	EL PASO-VENEZUELA CORP.	10		
	El Paso Natural Gas Co.			
49	PHILLIPS PETROLEUM CO.	55.75	Concession,	Lake
	VENEZUELAN SUN OIL CO.	17.27	38 sq. mi.	Maracaibo,
	Sun Oil Co.		Drilling,	Venezuela
	ASHLAND OIL, INC.	10.79	Discovery,	
	MURPHY OIL CORP.	3.24	1 producing	
	EL PASO-VENEZUELA CORP.	3.24	field	
	El Paso Natural Gas Co.		Concession,	Venezuela
	KERR-McGEE CORP.	5.39	39 sq. mi.	(Eastern)
	PACIFIC PETROLEUM, LTD.	3.00	Drilling,	
	Phillips Petroleum Co. (48)		Discovery	
	VENEZUELAN ATLANTIC REFINING CO.	1.32		
	Atlantic Richfield Co.			
50	MOBIL OIL COMPANY DE VENEZUELA	50	Concession,	Venezuela
	Mobil Oil Corp.		Drilling,	
	TEXAS PETROLEUM CO.	50	Discovery	
	Texaco, Inc.			
51	MOBIL MARACAIBO C.A.	85	Concession,	Lake
	Mobil Oil Corp.		190 sq. mi.	Maracaibo,
	CORPORACION VENEZOLANA DEL PETROLEO (CVP)	15	(5 blocks)	Venezuela
	Venezuelan government co.			

(continued)

SOURCE: Data compiled from World Oil, 1957-1971, The Oil and Gas Journal, 1957-1971, International Petroleum Register, 1966-67, USA Oil Directory, 1972, and Latin America Petroleum Directory, 1971.

[a]Percent ownership not available.

[b]Numbers in parentheses ( ) under kind of activity refer to the number of joint activities, as shown in the source.

[c]Ownership percentages do not add to 100, due to rounding.

TABLE A-11

JOINT VENTURES IN EXPLORATION AND DRILLING, BY KIND OF ACTIVITY, WESTERN EUROPE, 1957-1971

Venture Number	Participants	Ownership, Percent	Kind of Activity	Area
1	ROHOELGEWINNUNGS A.G.	100	Concession, Drilling, 2 producing fields	Austria
	Shell Austria A.G. (50)			
	Royal Dutch/Shell Group			
	Mobil Oil Austria A.G. (50)			
	Mobil Oil Corp.			
2	DANSK UNDERGROUND CONSORTIUM (DUC)	100	Concession, 16,619 sq. mi. Drilling	Denmark
	A.P. Moller Companies (25)			
	Gulf Oil Company of Denmark (30)			
	Gulf Oil Co.			
	Shell Denmark, Ltd. (30)			
	Royal Dutch/Shell Group			
	California Oil Company of Denmark (7.5)			
	Standard Oil Company of California			
	Texaco Denmark, Inc. (7.5)			
	Texaco, Inc.			
3	ESSO REP	89	Concession, 35,000 sq. mi. Drilling, Discovery, 3 producing fields	France
	Esso Standard Societe Anonyme Francaise (89.0)			
	United Petroleum Securities Corp.			
	Standard Oil Company (New Jersey) (77.5)			
	Gulf Exploration Co. (22.5)			

(continued)

TABLE A-11 (Continued)

Venture Number	Participants	Ownership, Percent	Kind of Activity	Area
	Gulf Oil Corp.			
	ELF/ERAP	5		
	French government agency			
	OTHERS	6		
4	ESSO REP	55	Concession, 600 sq. mi. Drilling	France (offshore)
	Esso Standard Societe Anonyme Francaise (89.0)			
	United Petroleum Securities Corp.			
	Standard Oil Company (New Jersey) (77.5)			
	Gulf Exploration Co. (22.5)			
	Gulf Oil Corp.			
	SOCIETE NATIONALE DES PETROLES D' AQUITAINE (SNPA)	25		
	Elf/Erap (51)			
	French government agency			
	Compagnie Francaise des Petroles (CFP) (7.2)			
	French government (35)			
	Others (65)			
	Others (41.8)			
	COMPAGNIE D'EXPLORATION PETROLIERE	20		
	Local private capital			
5	AMERICAN OVERSEAS PETROLEUM, LTD.	50	Concession, 12,000 sq. mi.	France
	Standard Oil Company of California (50)			

(continued)

TABLE A-11 (Continued)

Venture Number	Participants	Ownership, Percent	Kind of Activity	Area
	Texaco, Inc. (50)		Drilling	
	SOCIETE NATIONALE DES PETROLES DU LANGUEDOC MEDITERRANEAN	50		
6	AMERICAN OVERSEAS PETROLEUM, LTD.	50	Concession, Drilling	France
	Standard Oil Company of California (50)			
	Texaco, Inc. (50)			
	COMPAGNIE D'EXPLORATION PETROLIERE	50		
7	ENVOY OIL, LTD.	__a	Concession, 27,136 sq. mi.	Ireland
	Ambassador Oil Corp.			
	CONTINENTAL OIL COMPANY OF ENGLAND	__a	Concession, 2,734 sq. mi.	
	Continental Oil Co.			
	MARATHON PETROLEUM IRELAND, LTD.	__a	Drilling	
	Marathon Oil Co.			
8	AGIP S.p.A.	51	Concession, Drilling	Italy (offshore)
	Ente Nazionale Idrocarburi (ENI) (84)			
	Italian government co.			
	Others (16)			
	SHELL ITALIANA S.p.A.	49		
	Royal Dutch/Shell Group			
9	BRITISH PETROLEUM MIJ NEDERLAND N.V.	__a	Concession	Netherlands
	British Petroleum Co., Ltd.			
	GULF OIL (NEDERLAND) N.V.	__a		
	Gulf Oil Corp.			

(continued)

TABLE A-11 (Continued)

Venture Number	Participants	Ownership Percent	Kind of Activity	Area
	MOBIL PRODUCING NETHERLANDS, INC.	a		
	Mobil Oil Corp.			
10	N.V. NEDERLANDSE AARODLIE MAATSCHAPPIJ ..	40	Concession	Netherlands
	Royal Dutch/Shell Group (50)		615 sq. mi.	
	Esso A.G. (50)			
	Standard Oil Company (New Jersey)			
	MOBIL PRODUCING NETHERLANDS, INC.	20		
	Mobil Oil Corp.			
	NETHERLANDS GOVERNMENT	40		
11	SHELL ESPANA N.V.	75	Concession, Drilling	Spain (offshore)
	Royal Dutch/Shell Group (50)			
	COMPANIA ARRENDATARIA DEL MONOPOLIO DE PETROLEOS, S.A. (CAMPSA)	25		
	Spanish government agency			
12	AMERICAN OVERSEAS PETROLEUM, LTD.	50	Concession, 3,123 sq. mi. Drilling, Discovery	Spain
	Standard Oil Company of California (50)			
	Texaco, Inc.			
	COMPANIA ARRENDATARIA DEL MONOPOLIO DE PETROLEOS, S.A. (COMPSA)	50		
	Spanish government agency			
13	OLDENBURG CONSORTIUM	100	Concession, Drilling, Discovery	West Germany
	Gewerkschaften Britgitta (66.7)			
	Esso A.G. (50)			
	Standard Oil Company (New Jersey)			

TABLE A-11 (Continued)

Venture Number	Participants	Ownership, Percent	Kind of Activity	Area
	Deutsche Shell A.G. (50) Royal Dutch/Shell Group Mobil Oil A.G. (33.3) Mobil Oil Corp.			
14	SCHOLVEN CONSORTIUM ..... Gewerkschaften Brigitta (50) Esso A.G. (50) Standard Oil Company (New Jersey) Deutsche Shell A.G. (50) Royal Dutch/Shell Group Mobil Oil A.G. (50) Mobil Oil Corp.	100	Concession, Drilling, Discovery	West Germany
15	DEUTSCHE ERDOLVERSORGUNGSGESELLSCHAFT MBH (DEMINEX) ..... Veba-Chemie A.G. (18.5) Deutsche Schachtbau-und Tiefbohregesehschaft M.b.H. (10) Gelsenberg A.G. (GBAG) (18.5) Preussag A.G. (7) Saarbergwerke A.G. (9) Union Rheinische Braunkohlen Kraftstoff A.G. (13.5) Badische Anilin und Sodafabrik A.G. (BASF) (18.5) C. Dielman Co. (5)	100	Exploration	West Germany

(continued)

SOURCE: Data compiled from World Oil, 1957-1971, The Oil and Gas Journal, 1957-1971, International Petroleum Register, 1966-67, Eastern Hemisphere Petroleum Directory, 1971-72, USA Oil Directory, 1972.

[a]Percent ownership not available.

TABLE A12

OWNERSHIP, CAPACITY, AND LOCATION OF CRUDE OIL REFINERIES, AFRICA, 1971

Venture Number	Ownership, Company, and Country		Crude Refining Capacity (Barrels per day)
	ALGERIA		
1	Cia Raffinage en Afrique du Nord (CRAN)	50%	3,300
	Societe Nationale de Recherches et d' Exploitation des Petroles en Algerie (SN REPAL)	50%	
	Algerian government	40%	
	ELF/ERAP	41.15%	
	French government agency		
	Compagnie Financiere de Recherches Petrolieres (COFIREP)	5.33%	
	Holding company (French)		
	Others (French banking and investment companies)	19.52%	
	Location: Hassi Messaoud		
2	Soc. de la Raffinerie d'Alger		45,000
	Ownership:		
	Campagnie Francaise des Petroles (CFP)	20%	
	French government (35)		
	Others (65)		
	Societe Nationale de Recherches et d'Exploitation des Petroles en Algerie (SN REPAL)	10%	

(continued)

TABLE A12 (Continued)

Venture Number	Ownership, Company, and Country		Crude Refining Capacity (Barrels per day)
	Algerian government (40%)		
	ELF/ERAP (40.15%)		
	French government agency		
	Beryl-Algerie	6%	
	Compagnie Maracaine des Raffineries de Berre		
	Cie Francaise de Patrole	12%	
	Campagnie Francaise des Petroles (CFP)		
	French government (35)		
	Others (65)		
	Mobil Oil Francaise	6%	
	Mobil Oil Corp.		
	Esso (Mediterrean)	17.6%	
	Standard Oil Co. (New Jersey)		
	Societe Francaise des Petroles BP	10.4%	
	British Petroleum Co. Ltd.		
	Soc. Shell d'Algerie	18%	
	Royal Dutch/Shell Group		
	Location: Maison Carree		
	MOROCCO		
3	Ste. Cherifienne des Petroles		9,000
	Ownership:		
	Moroccan government	50%	
	ELF/ERAP	36%	

(continued)

TABLE A12 (Continued)

Venture Number	Ownership, Company, and Country		Crude Refining Capacity (Barrels per day)
	French government agency		
	Compagnie Francaise des Petroles (CFP)	6%	
	French government (35)		
	Others (65)		
	Others	8%	
	Location: Sidi-Kacem		
4	Ste. Marocaine Italiennede Raffinage (SAMIR)		28,000
	Ownership:		
	Moroccan government	50%	
	Ente Nazionale Idrocarburi	50%	
	Italian government co.		
	Location: Mohammedia		
	SENEGAL		
5	Ste. Africaine de Raffinage (SAR)		12,600
	Ownership:		
	Bataafse Petroleum Mij N.V.	11.8%	
	Royal Dutch/Shell Group		
	British Petroleum Co. Ltd.	11.8%	
	Mobil Oil Co.	11.8%	
	Compagnie Francaise des Petroles (CFP)	11.8%	

(continued)

TABLE A12 (Continued)

Venture Number	Ownership, Company, and Country		Crude Refining Capacity (Barrels per day)
	French government (35)		
	Others (65)		
	Texaco Inc.	11.8%	
	Esso Exploitation Senegal Inc.	1%	
	Esso Exploitation Inc.		
	Standard Oil Co. (New Jersey)		
	Banque Senegalaise de Development	10%	
	Societe Africaine des Petroles	6%	
	ELF/ERAP		
	French government agency		
	Other	24%	
	Location: Dakar		
	SIERRA LEONE		
6	Sierra Leone Petroleum Refining Co. Ltd.		10,000
	Ownership:		
	Royal Dutch/Shell Group		
	Location: Freetown		
	LIBERIA		
7	Liberia Refining Co.		10,000
	Ownership:		
	Sunray DX Liberia Oil Co.		

(continued)

TABLE A12 (Continued)

Venture Number	Ownership, Company, and Country		Crude Refining Capacity (Barrels per day)
	Sun Oil Co.		
	Hydrocarbon Research Inc.		
	Ente Nazionale Idracarburi (ENI)		
	Italian government co.		
	Location: Monrovia, Gardnersville		
	IVORY COAST		
8	Ste. Ivoirienne de Raffinage		22,800
	Ownership:		
	Ivory Coast government	10%	
	Mobil Oil Co.	18.2%	
	Bataalse Petroleum Mij	14.7%	
	Royal Dutch/Shell Group		
	British Petroleum Co. Ltd.	10.2%	
	Texaco Inc.	7.9%	
	Esso Mediterranean Inc.	1%	
	Esso Exploitation Inc.		
	Standard Oil Co. (New Jersey)		
	Compagnie Francaise des Petroleos (CFP)	13%	
	French government (35)		
	Others (65)		
	Others	25%	
	Location: Abidjan		

(continued)

TABLE A12 (Continued)

Venture Number	Ownership, Company, and Country		Crude Refining Capacity (Barrels per day)
	GHANA		
9	Ghanian-Italian Petroleum Co. Ltd.		28,000
	Ownership:		
	Anic Spa	95%	
	Ente Nazionale Idrocarburi 59.619%		
	Italian government co.		
	Others 40.381%		
	AGIP Spa	5%	
	Ente Nazionale Idracarburi 79.87%		
	Italian government co.		
	Others 20.13%		
	Location: Tema		
	NIGERIA		
10	Nigerian Petroleum Refining Co. Ltd.		55,000
	Ownership:		
	Shell BP Petroleum Development Co.	50%	
	Royal Dutch/Shell Group 50%		
	British Petroleum Co. Ltd. 50%		
	Nigerian government	50%	
	Location: Port Harcourt		

(continued)

TABLE A12 (Continued)

Venture Number	Ownership, Company, and Country	Crude Refining Capacity (Barrels per day)
	GABON	
11	Soc. Equatoriale de Raffinage	17,200
	Ownership: a	
	Location: Port Gentil	
	CONGO	
12	Ste. Congo-Italienne de Raffinage (SOCIR)	17,000
	Ownership:	
	Ente Nazionale Idrocarburi 50%	
	Italian government co.	
	Congolese government 50%	
	Location: Kinshasa, Moanda	
	ANGOLA	
13	Companhia de Petroleos de Angola (SARL)	14,000
	Ownership:	
	Petrofina, S.A. 45%	
	Portugese government 55%	

(continued)

TABLE A12 (Continued)

Venture Number	Ownership, Company, and Country	Crude Refining Capacity (Barrels per day)
	Location: Luanda	
	REPUBLIC OF SOUTH AFRICA	
14	Caltex Oil SA Ltd.	50,000
	Ownership: Standard Oil Co. of California ..... 50% Texaco Inc. 50%	
	Location: Cape Town	
15	Mobil Refining Co. of South Africa Pty. Ltd.	54,000
	Ownership: Mobil Oil Corp.	
	Location: Durban	
16	National Petroleum Refiners of South Africa Pty. Ltd.	55,000
	Ownership: South African Coal, Oil & Gas Corp. Ltd. ..... 52.5% Industrial Development Corp. of South Africa Ltd. South African government National Iranian Oil Co. ..... 17.5% Iranian government	

(continued)

TABLE A12 (Continued)

Venture Number	Ownership, Company, and Country	Crude Refining Capacity (Barrels per day)
	Total Refinery South Africa Pty. Ltd. ..... 30% Campagnie Francaise des Petroles (CFP) French government (35) Others (65)	
	Location: Sasolburg	
17	South African Petroleum Refineries	84,000
	Ownership: Royal Dutch/Shell Group ..... 50% British Petroleum Co. Ltd. 50%	
	Location: Durban	
18	South African Torbanite Mining and Refining Co. Ltd.	3,900
	Ownership: Local private capital	
	Location: Transvaal	
	RHODESIA	
19	Central African Petroleum Refineries Pvt. Ltd.	20,000
	Ownership: Royal Dutch/Shell Group 20.75%	

(continued)

TABLE A12 (Continued)

Venture Number	Ownership, Company, and Country		Crude Refining Capacity (Barrels per day)
	British Petroleum Exploration Co.	20.75%	
	Mobil Oil Southern Rhodesia Pbt. Ltd.	17.75%	
	Mobil Oil Corp.		
	Caltex Petroleum Corp.	15.75%	
	Texaco Inc. (50)		
	Standard Oil Co. of California (50)		
	Aminoil Inc.	15%	
	American Independent Oil Co.		
	R. J. Reynolds Industries		
	Compagnie Francaise de Petroleos (CFP)	5%	
	French government (35)		
	Others (65)		
	Kuwait Natl. Co.	5%	
	Government (60%)		
	Private capital (40%)		
	Location: Feruka, Umtali		
	MALAGASY		
20	Societe Malgache de Raffinage		14,000
	Ownership:		
	ELF/ERAP	80.82%	
	French government agency		
	Caisse Centrole de Cooperation Economique	16.85%	

(continued)

TABLE A12 (Continued)

Venture Number	Ownership, Company, and Country		Crude Refining Capacity (Barrels per day)
	Government of Malagasy	1.58%	
	Compagnie Francaise de Petroleos (CFP).....	.75%	
	French government (35)		
	Others (65)		
	Location: Tamatave		
	TANZANIA		
21	Tanzania Italian Petroleum Co.		16,800
	Ownership:		
	Ente Nazionale Idrocarburi	50%	
	Italian government co.		
	Government of Tanzania	50%	
	Location: Dar-es-Salaam, Kigamboni		
	KENYA		
22	East African Oil Refineries Ltd.		51,000
	Ownership:		
	British Petroleum Co. Ltd.	25.5%	
	Shell Petroleum Co. Ltd.	25.5%	
	Royal Dutch/Shell Group		

(continued)

TABLE A12 (Continued)

Venture Number	Ownership, Company, and Country	Crude Refining Capacity (Barrels per day)
	Esso Standard Eastern Inc. 25.5%	
	Standard Oil Co. (New Jersey)	
	California Texas Oil Corp. 23.5%	
	Texaco Inc. (50)	
	Standard Oil Co. of California (50)	
	Location: Mombasa	
	ETHIOPIA	
23	Ethiopian Petroleum Share Co.	14,420
	Ownership:	
	State Owned	
	Location: Addis Ababa, Assab	
	SUDAN	
24	Shell & BP (Sudan) Ltd.	20,000
	Ownership:	
	Royal Dutch/Shell Group	
	British Petroleum Co. Ltd.	
	Location: Port Sudan	

(continued)

TABLE A12 (Continued)

Venture Number	Ownership, Company, and Country	Crude Refining Capacity (Barrels per day)
	EGYPT	
25	Alexandria Petroleum Co. (Permex)	70,000
	Ownership: Egyptian General Petroleum Corp. (EGPC) State Owned	
	Location: Alexandria	
26	El Nasr Petroleum Co.	85,000
	Ownership: Egyptian General Petroleum Corp. (EGPC) State owned	
	Location: Suez	
27	Suez Oil Processing Co.	55,000
	Ownership: Egyptian General Petroleum Corp. (EGPC) State owned	
	Location: Suez	

(continued)

TABLE A12 (Continued)

Venture Number	Ownership, Company, and Country	Crude Refining Capacity (Barrels per day)
	LIBYA	
28	Esso Standard Libya	9,500
	Ownership: Standard Oil Co. (New Jersey)	
	Location: Marsa el Brega	
	TUNISIA	
29	Societe Tuniso-Italienne de Raffinage (STIR)	25,000
	Ownership: Ente Nazionale Idrocarburi ..... 50% Italian government co. Tunisian government 50%	
	Location: Bizerte	

SOURCE: Compiled from data in World Oil, 1957-1971, The Oil and Gas Journal, 1957-1971, The International Petroleum Register, 1966-67, International Petroleum Encyclopedia, 1971-72, The USA Oil Directory, 1972, and Worldwide Directory; Refining and Gas Processing, 1971-72.

[a]Percent ownership not available.

TABLE A13

OWNERSHIP, CAPACITY, AND LOCATION OF CRUDE OIL REFINERIES, ALASKA AND NORTH SLOPE, 1971

Venture Number	Ownership, Company, and Country	Crude Refining Capacity (Barrels per day)
	ALASKA AND NORTH SLOPE	
1	Standard Oil Co. of California-- Western Operations Inc. Location: Kenai	20,800
2	Tesoro - Alaskan Petroleum Corp. Ownership: Tesoro Petroleum Corp. Alaskan Petroleum Corp. Location: Kenai	18,000

SOURCE: International Petroleum Encyclopedia, 1971-72, and Worldwide Directory; Refining and Gas Processing, 1971-72.

TABLE A14

OWNERSHIP, CAPACITY, AND LOCATION OF CRUDE OIL REFINERIES, ASIA-PACIFIC AREA, 1971

Venture Number	Ownership, Company, and Country	Crude Refining Capacity (Barrels per day)
	BRUNEI	
1	Sarawak Shell Berhad	60,000
	Ownership: Royal Dutch/Shell Group	
	Location: Lutong	
	BURMA	
2	Myanma Oil Corp.	26,300
	Ownership: Burma Oil Co. (1964) Ltd. ..... 50% Peoples Oil Industry ..... 50% Burmese government	
	Location: Two refineries, Chauk (6,300), Syriam (20,000)	
	CAMBODIA	
3	Societe Khmere de Raffinage de Petrole	13,200
	Ownership: Cambodian government ..... 65% ELF/Union ..... 35% ELF/ERAP French Government agency	
	Location: Krung Kompong Som	
	CEYLON	
4	Ceylon Petroleum Corp.	43,000
	Ownership: State Owned	
	Location: Sapugaskanda	

(continued)

TABLE A14 (Continued

Venture Number	Ownership, Company, and Country	Crude Refining Capacity (Barrels per day)
	INDIA	
5	Assam Oil Co. Ltd.	9,800
	Ownership: Burmah Oil Co.	
	Location: Digboi	
6	Burmah Shell Refineries Ltd.	110,000
	Ownership: Royal Dutch/Shell Group	
	Location: Bombay	
7	Caltex Oil Refining (India) Ltd.	33,500
	Ownership: Standard Oil Co. of California .... 50% Texaco Inc. 50%	
	Location: Visakhapatnam	
8	Cochin Refineries Ltd.	51,800
	Ownership: Indian government ..... 52.4% Phillips Petroleum Co. ..... 26.4% Duncan Bros. 21.2%	
	Location: Cochin	
9	Esso Standard Refining Co. of India Ltd.	47,000
	Ownership: Esso Standard Eastern Inc. Standard Oil Co. (New Jersey)	
	Location: Trombay, Greater Bombay	

(continued)

TABLE A14 (Continued)

Venture Number	Ownership, Company, and Country	Crude Refining Capacity (Barrels per day)
10	India Oil Corp. Ltd.	144,000
	Ownership: Burmah Oil Co. Ltd. ..... 66 2/3% Indian government 33 1/3%	
	Location: Three Refineries, Barauni (43,000), Noonmati (16,000), Jawaharnagar (85,000)	
11	Madras Refineries Ltd.	41,200
	Ownership: Indian government (majority interest) National Iranian Oil Co. Iranian government American International Oil Co. Standard Oil Co. (Indiana)	
	Location: Manali	
	INDONESIA	
12	Pertamina Balikpapan	420,000
	Ownership: State Owned	
	Location: Seven Refineries, Balikpapan (75,000), Dumai, Central Sumatra (100,000), Pakning (50,000), Pangkalan Brandan (2,000), Pladju (110,000), Sungai Gerong (79,000), Wonokromo (4,000)	
	JAPAN	
13	Asia Oil Co. Ltd.	125,000
	Ownership: (Japanese capital)	
	Location: Two Refineries, Hakodate (25,000), Yokohama (100,000)	

(continued)

TABLE A14 (Continued)

Venture Number	Ownership Company, and Country	Crude Refining Capacity (Barrels per day)
14	Daikyo Oil Co. Ltd.	195,000
	Ownership: (Japanese capital)	
	Location: Two Refineries, Yokkaichi (155,000), Umaokoski (40,000)	
15	Fuji Kosan Co. Ltd.	47,600
	Ownership: Fuji Oil Co. Ltd. Sumitomo Chemical Tokyo Electirc Power Arabian Oil Co. Ltd.	
	Location: Kainan	
16	Fuji Sekiyu K.K. Ltd.	140,000
	Ownership: Sumitomo Chemical Tokyo Electric Power Arabian Oil Co. Ltd.	
	Location: Chiba	
17	Idemitsu Kosan Co. Ltd.	430,000
	Ownership: (Japanese capital)	
	Location: Three Refineries, Chiba (180,000), Hyogo (110,000), Tokuyama (140,000)	
18	Kashima Oil Co. Ltd.	180,000
	Ownership: Mitsubishi Petrochemical ..... 30% Kyodo Oil ..... 30% Daikyo Oil ..... 25% Tokyo Electric Power 15%	
	Location: Kashima	

(continued)

TABLE A14 (Continued)

Venture Number	Ownership, Company, and Country	Crude Refining Capacity (Barrels per day)
19	Kansai Oil Co. Ltd.	60,000
	Ownership: (Japanese capital)	
	Location: Sakai	
20	Koa Oil Co. Ltd.	229,000
	Ownership: Caltex Oil Japan Ltd. ..... 50% Texaco Inc. Standard Oil Co. of California Japanese capital 50%	
	Location: Two Refineries, Marifu (149,000), Osaka (80,000)	
21	Kyokuto Petroleum Industries Ltd.	60,000
	Ownership: Mitsui Group ..... 50% Mobil Oil Corp. 50%	
	Location: Chiba	
22	Kyushu Oil Co.	100,000
	Ownership: Yawatee Iron & Steel Yawata Chemical Kyushe Electric Power Onada Cement Taiyo Fisheries Kinoshita Trading Co.	
	Location: Ohita	

(continued)

TABLE A14 (Continued)

Venture Number	Ownership, Company, and Country	Crude Refining Capacity (Barrels per day)
23	Maruzen Oil Co. Ltd.	242,500
	Ownership: Union Oil Co. of California ..... 32.9% Japanese capital 67.1%	
	Location: Three Refineries, Chiba (155,000), Matsuyama (50,000), Shimotsu (37,500)	
24	Mitsubishi Oil Co. Ltd.	244,440
	Ownership: Getty Oil Co. ..... 50% Japanese capital 50%	
	Location: Two Refineries, Kawasaki (74,440), Mizushima (170,000)	
25	Nichimo Sekiyu Seisei KK	57,000
	Ownership: Toa Nenryo Kogyo Co. ..... 70% Mobil Sekuji Kabuskiki Kaiska 25% Mobil Oil Corp. Japanese capital ..... 50% Esso Standard Eastern ..... 25% Standard Oil Co. (New Jersey) Nippon Hyomo Sengu Kaisha Ltd. 30%	
	Location: Kawasaki	
26	Nihonkai Oil Co. Ltd.	30,000
	Ownership: Hokuribu Electric Power 36%	
	Location: Toyama City	

(continued)

TABLE A14 (Continued)

Venture Number	Ownership, Company, and Country	Crude Refining Capacity (Barrels per day)
27	General Sekiyu Seisei KK	175,000
	Ownership: General Sekiyu KK ..... 50% Esso Standard Sekiyu KK ..... 50% Standard Oil Co. (New Jersey)	
	Location: Two Refineries, Kawasaki (55,000), Sakai (120,000)	
28	Nippon Mining Co. Ltd.	209,350
	Ownership: (Japanese capital)	
	Location: Two Refineries, Funakawa (14,150), Mizushima (195,200)	
29	Nippon Petroleum Refining Co. Ltd.	344,000
	Ownership: Caltex Oil (Japan) Ltd. ..... 50% Texaco Inc. Standard Oil Co. of California Nippon Oil 50%	
	Location: Four Refineries, Kudamatsu (42,000), Muroran (10,000), Negishi (220,000), Yokohama (72,000)	
30	Nippon Sekiyu KK	26,000
	Ownership: (Japanese capital)	
	Location: Two Refineries; Akita (4,000), Niigata (22,000)	
31	Showa Sekiyu KK	41,000
	Ownership: Royal Dutch/Shell Group ..... 50% Japanese capital 50%	
	Location: Niigata (41,000)	

(continued)

TABLE A14 (Continued)

Venture Number	Ownership, Company, and Country	Crude Refining Capacity (Barrels per day)
32	Showa Yokkaichi Sekiyu KK	180,000
	Ownership: Showa Oil ..... 50% Royal Dutch/Shell Group ....50% Japanese capital .....50% Royal Dutch/Shell Group ..... 25% Mitsubishi Group 25%	
	Location: Yokkaichi	
33	Taiyo Sekiyu KK	59,000
	Ownership: (Japanese capital)	
	Location: Kikuma	
34	Teiseki Topping Plant Co.	4,100
	Ownership: (Japanese capital)	
	Location: Kubiki	
35	Toa Nenryo Kogyo KK	380,500
	Ownership: Mobil Sekiyu Kabushiki Kaisha ..... 25% Mobil Oil Corp. Japanese capital ..... 50% Esso Standard Eastern ..... 25% Standard Oil Co. (New Jersey)	
	Location: Three Refineries, Kawasaki (150,000), Shimizu (43,500), Wakayama (187,000)	
36	Toa Sekiyu KK	100,000
	Ownership: (Japanese capital)	
	Location: Kawasaki	

(continued)

TABLE A14 (Continued)

Venture Number	Ownership, Company, and Country	Crude Refining Capacity (Barrels per day)
37	Toho Sekiyu KK	40,000
	Ownership: (Japanese capital)	
	Location: Owase City	
38	Tohoku Oil Co.	40,000
	Ownership: (Japanese capital)	
	Location: Sendai Bay	
	KOREA, SOUTH	
39	Honam Oil Refinery Co. Ltd.	105,000
	Ownership: Caltex Oil ..... 50% Standard Oil Co. of California Texaco Inc. Korean government 50%	
	Location: Yosu	
40	Korea Oil Corp.	115,000
	Ownership: Gulf Oil Corp. 25%	
	Location: Wulsan	
41	Esso Standard Malaysia Berhard	35,500
	Ownership: Standard Oil Co. (New Jersey	
	Location: Port Dickson	

(continued)

TABLE A14 (Continued)

Venture Number	Ownership, Company, and Country	Crude Refining Capacity (Barrels per day)
42	Shell Refining Co.	31,000
	Ownership: Royal Dutch/Shell Group	
	Location: Port Dickson	
	OKINAWA	
43	Toyo Petroleum Refining Co. Ltd.	25,000
	Ownership: a	
	Location: Naha	
	PAKISTAN	
44	Pakistan Refining Co. Ltd.	58,000
	Ownership: Pakistani capital ..... 40% Burmah Oil Co. (Pakistan Trading) Ltd. Burmah Oil Co. Ltd. Pakistan Shell Oil Co. Ltd. Royal Dutch/Shell Ltd. Caltex Group Texaco Inc. (50%) Standard Oil Co. of California(50%) Esso Pakistan Standard Oil Co. (New Jersey)	
	Location: Korangi, Karachi	
45	Attock Oil Co. Ltd.	11,640
	Ownership: a	
	Location: Rawalpinki	

(continued)

TABLE A14 (Continued)

Venture Number	Ownership, Company, and Country	Crude Refining Capacity (Barrels per day)
46	Eastern Refinery Ltd.	34,000
	Ownership: Pakistani Interest ..... 70% Burmah Oil Co. 30%	
	Location: Chittagong	
47	National Refinery Ltd.	13,500
	Ownership: a	
	Location: Korangi, Karachi	
	PHILIPPINES	
48	Bataan Refining Corp.	52,000
	Ownership: Mobil Oil Philippines Inc. ..... 31% Mobil Oil Corp. Esso Standard Eastern ..... 69% Standard Oil Co. (New Jersey)	
	Location: Limay	
49	Filoil Refinery Corp.	24,000
	Ownership: Local private capital	
	Location: Rosario	
50	Caltex Philippines Inc.	75,000
	Ownership: Standard Oil Co. of California .... 50% Texaco Inc. 50%	
	Location: Batangas	

(continued)

TABLE A14 (Continued)

Venture Number	Ownership, Company, and Country	Crude Refining Capacity (Barrels per day)
51	Shell Refining Co. (Philippines) Inc.	70,000
	Ownership: Royal Dutch/Shell Group ..... 70% Philippine private capital 30%	
	Location: Batangas	
	SINGAPORE	
52	BP Refinery Singapore Pte.	25,000
	Ownership: The British Petroleum Co. Ltd.	
	Location: Pasir Panjang Road	
53	Mobil Refining Co. Malaysia Ltd.	27,000
	Ownership: Mobil Oil Corp.	
	Location: Jurong	
54	Shell Eastern Petroleum Ltd.	235,000
	Ownership: Royal Dutch/Shell Group	
	Location: Singapore	
	TAIWAN	
55	Chinese Petroleum Corp.	220,000
	Onwership: Nationalist Chinese Government Company	
	Location: Kaohsiung	

(continued)

TABLE A14 (Continued)

Venture Number	Ownership, Company, and Country	Crude Refining Capacity (Barrels per day)
56	China Gulf Oil Co. Ltd.	b
	Ownership: Gulf Oil Corp. ..... 70% Chinese Petroleum Corp. 30%	
	Location: Kaohsiung	
	THAILAND	
57	Thai Oil Refinery Co. Ltd.	65,000
	Ownership: a	
	Location: Sriracha	
58	Defense Energy Department	21,200
	Ownership: government agency	
	Location: Three Refineries, Bangkok (20,000), Fang Refinery, Chiengmai (1,200)	

SOURCE: Compiled from data in World Oil, 1957-1971, The Oil and Gas Journal, 1957-1971, The International Petroleum Register, 1966-67, International Petroleum Encyclopedia, 1971-72, The USA Oil Directory, 1972, and Worldwide Directory; Refining and Gas Processing, 1971-72.

[a]Percent ownership not available.

[b]Not in operation as of 1971.

TABLE A15

OWNERSHIP, CAPACITY, AND LOCATION OF CRUDE OIL REFINERIES
AUSTRALASIA, 1971

Venture Number	Ownership, Company, and Country	Crude Refining Capacity (Barrels per day)
	AUSTRALIA	
1	Amoco Australia Pty. Ltd.	27,000
	Ownership: Standard Oil Co. (Indiana)	
	Location: Bulwer Island in Brisbane Harbor	
2	Ampol Refineries Ltd.	60,000
	Ownership: Ampol Petroleum Ltd.	
	Location: Brisbane	
3	Australian Lubricating Oil Refinery	2,500
	Ownership: Ampol Petroleum Ltd. ..... 25% Caltex Oil (Australia) Pty. Ltd. .. 50% Standard Oil Co. of California ..... 50% Texaco Inc. ..... 50% H. C. Sleigh Ltd. 25%	
	Location: Kurnell	
4	Australian Oil Refinery Pty. Ltd.	97,000
	Ownership: Caltex Oil (Australia) Pty. Ltd. Standard Oil Co. of California ..... 50% Texaco Inc. 50%	
	Location: Kurnell	

(continued)

TABLE A15 (Continued)

Venture Number	Ownership, Company, and Country	Crude Refining Capacity (Barrels per day)
5	BP Refinery (Kwinana) Pty Ltd.	108,000
	Ownership: British Petroleum Co. Ltd.	
	Location: Kwinana	
6	BP Refinery (Westernport) Pty.	50,000
	Ownership: British Petroleum Co. of Australia Ltd. British Petroleum Co. Ltd.	
	Location: Westernport	
7	Petroleum Refineries (Australia) Pty. Ltd.	151,000
	Ownership: Esso Standard Oil (Australia) Ltd.. 26% Standard Oil Co. (New Jersey) Mobil Oil Corp. 74%	
	Location: Altona, Adelaide	
8	Shell Refinery (Australia) Pty. Ltd.	187,000
	Ownership: Royal Dutch/Shell Group	
	Location: Two Refineries, Clyde (75,000), Geelong (112,000)	
9	Total Boral Refineries Ltd.	19,000
	Ownership: Caltex Oil (Australia) Pty. Ltd. .. 40% Standard Oil Co. of California (50) Texaco Inc. (50) Local private capital 60%	
	Location: Matraville	

(continued)

TABLE A15 (Continued)

Venture Number	Ownership, Company, and Country	Crude Refining Capacity (Barrels per day)
10	New Zealand Refinging Company	66,000
	Ownership: Shell Oil New Zealand Limited Royal Dutch/Shell Group BP (New Zealand) Limited British Petroleum Co. Ltd. Caltex Group Standard Oil Co. of California (50) Texaco Inc. (50) Mobil Oil New Zealand Ltd. Mobil Oil Corp. Todd Oil Services Local private capital Public ..... 32% Location: Whangari at Massden Point	

SOURCE: Compiled from data in World Oil, 1957-1971, The Oil and Gas Journal, 1956-1971, The International Petroleum Register, 1966-67, International Petroleum Encyclopedia, 1971-72, The USA Oil Directory, 1972, and Worldwide Directory; Refining and Gas Processing, 1971-72.

[a]Percent ownership not available.

TABLE A16

OWNERSHIP, CAPACITY, AND LOCATION OF CRUDE OIL REFINERIES, CANADA, 1971

Venture Number	Ownership, Company, and Country	Crude Refining Capacity (Barrels per day)
	CANADA	
1	BP Refinery Canada Ltd.	110,000
	Ownership: British Petroleum Co. of Canada Ltd. British Petroleum Co. Ltd.	
	Location: Two Refineries, Oakville, Ontario (35,000), Montreal, Quebec (75,000)	
2	Imperial Oil Ltd. (9 plants)	438,600
	Ownership: Standard Oil Co. (New Jersey) ..... 70% Others 30%	
	Location: Nine Refineries, Calgary, Alberta (19,200), Darthmouth, Nova Scotia (63,500), Edmonton, Alberta (41,500), Ioco, British Colombia (34,300), Montreal East, Quebec (96,800), Norman Wells, Northwest Territories (2,800), Regina, Saskatchewan (31,200), Sarnia, Ontario (127,500), Winnipeg, Manitoba (21,800),	
3	Gulf Oil Canada Ltd.	274,800
	Ownership: Gulf Oil Corp. ..... 68.4% Others 31.6%	
	Location: Nine Refineries, Calgary, Alberta (10,000), Clarkson, Ontario (61,000), Edmonton, Alberta (14,000),	

(continued)

TABLE A16 (Continued)

Venture Number	Ownership, Company, and Country	Crude Refining Capacity (Barrels per day)
	Kamloops, British Colombia (6,500), Montreal East, Quebec (75,000), Moose Jaw, Saskatchewan (15,000), Port Moody, British Colombia (20,000), Saskatoon, Saskatchewan (8,300), Point Tupper on Cape Breton, Nova Scotia (65,000)	
4	Texaco Canada Ltd.	146,100
	Ownership: Texaco Inc.	
	Location: Four Refineries, Eastern Passage, Nova Scotia (14,000), Edmonton, Alberta (18,700), Montreal East, Quebec (63,400), Walpole, Ontario (50,000)	
5	Regent Refining (Canada) Ltd.	38,500
	Ownership: Texaco Canada Ltd. ..... 75% Texaco Inc. Others 25%	
	Location: Port Credit, Ontario	
6	Shell Canada Ltd.	250,100
	Ownership: Royal Dutch/Shell Group ..... 87% Others 13%	
	Location: Six Refineries, Burnaby, British Colombia (20,300), Corunna, Ontario (52,000), Bowden, Alberta (5,200), Oakville, Ontario (41,600), Pointe-Aux Trembles, Quebec (104,000), St. Boniface, Manitoba (27,000)	

(continued)

TABLE A16 (Continued)

Venture Number	Ownership, Company, and Country	Crude Refining Capacity (Barrels per day)
7	Golden Eagle Canada Ltd.	112,000
	Ownership: Ultramar Canada Ltd. Ultramar Co. Ltd.	
	Location: Two Refineries, Holyrood, Newfoundland (12,000), St. Romvald, Quebec (100,000)	
8	Husky Oil Canada Ltd.	11,000
	Ownership: Husky Oil Ltd.	
	Location: Two Refineries, Moose Jaw, Saskatchewan (4,000), Lloydminister, Alberta (7,000)	
9	Pacific Petroleum Ltd.	10,000
	Ownership: Pacific Petroleum Ltd. ..... 50% Phillips Petroleum Co. .... 48% Others ..... 52% Phillips Petroleum Co. 50%	
	Location: Taylor Flats, British Columbia	
10	Great Canadian Oil Sands Ltd.	65,000
	Ownership: Sun Oil Co. ..... 75% Canadian Oil Co. Royal Dutch/Shell Group Canadian Pacific Oil and Gas Co. Canadian Pacific Railway Co.	
	Location: Ft. McMurray	

(continued)

TABLE A16 (Continued)

Venture Number	Ownership, Company, and Country	Crude Refining Capacity (Barrels per day)
11	Union Oil Co. of Canada Ltd.	8,000
	Ownership: Union Oil Co. of California ..... 83% Others 17%	
	Location: Prince George, British Columbia	
12	Irving Refining Ltd.	47,500
	Ownership: Standard Oil Co. of California .... 50% Irving Interest of Canada 50%	
	Location: St. Johns, New Brunswick	
13	Petrofina Canada Ltd.	55,000
	Ownership: Petrofina S.A. Belgian Private Capital	
	Location: Pointe-aux-Trembles, Quebec	
14	Chevron Canada Ltd.	20,900
	Ownership: Standard Oil Co. of California	
	Location: North Burnaby (Vancouver)	
15	Mohawk Oil Ltd.	10,000
	Ownership: Canadian private capital	
	Location: Edmonton	

SOURCE: Compiled from data in World Oil, 1957-1971,

(continued)

The Oil and Gas Journal, 1957-1971, The International Petroleum Register, 1966-67, International Petroleum Encyclopedia, 1971-72, The USA Oil Directory, 1972, and Worldwide Directory: Refining and Gas Processing, 1971-72.

TABLE A17

OWNERSHIP, CAPACITY, AND LOCATION OF CRUDE OIL REFINERIES, CENTRAL AMERICA, 1971

Venture Number	Ownership, Company, and Country	Crude Refining Capacity (Barrels per day)
	ANTIQUA	
1	West Indies Oil Co. Ltd.	18,000
	Ownership:	
	Natomas Co. 58%	
	American International Oil Co. 42%	
	Standard Oil Co. (Indiana)	
	Location: St. Johns	
	NETHERLANDS ANTILLES	
2	Lago Oil and Transport Co.	460,000
	Ownership:	
	Standard Oil Co. (New Jersey)	
	Location: Aruba	
3	Shell Curacao NV	360,000
	Ownership:	
	Shell Western Holdings Ltd.	
	Royal Dutch/Shell Group	
	Location: Curacao	
	BARBADA	
4	Mobil Oil Barbados Ltd.	3,000
	Ownership:	
	Mobil Oil Corp.	
	Location: Bridgetown	

(continued)

TABLE A17 (Continued)

Venture Number	Ownership, Company, and Country	Crude Refining Capacity (Barrels per day)
	COSTA RICA	
5	Refinadora Costarricense de Petroleo SA	8,000
	Ownership: Local interest ..... 55% Costa Rican government ..... 30% Allied Chemical Corp. 15%	
	Location: Puerto Limon	
	EL SALVADOR	
6	Refineria Petrolera Acajutla SA	13,000
	Ownership: Standard Oil Co. (New Jersey) ..... 50% Royal Dutch/Shell Group 50%	
	Location: Acajutla	
	GUATEMALA	
7	Refineria Petrolera de Gualemala-California Inc.	11,000
	Ownership: Standard Oil Co. of California .... 60% Royal Dutch/Shell Group 40%	
	Location: Santos Tomas de Castilla	
8	Texas Petroleum Co.	14,000
	Ownership: Texaco, Inc.	
	Location: Escuintla	

(continued)

TABLE A17 (Continued)

Venture Number	Ownership, Company, and Country	Crude Refining Capacity (Barrels per day)
	HONDURAS	
9	Refineria Texaco de Honduras SA	14,000
	Ownership: Texaco Inc. ..... 67% Others 33%	
	Location: Puerto Cortes	
	BAHAMAS	
10	Bahamas Oil Refining Co.	250,000
	Ownership: New England Petroleum Corp. ..... 60% Chevron Oil Bahamas ..... 40% Standard Oil Co. of California	
	Location: Freeport	
	VIRGIN ISLAS	
11	Amerada Petroleum Corp.	440,000
	Ownership: Amerada-Hess Corp.	
	Location: St. Croix	
	JAMAICA	
12	Esso West Indies Ltd.	35,000
	Ownership: Esso Standard Oil S.A. Ltd. Standard Oil Co. (New Jersey)	
	Location: Kingston	

(continued)

TABLE A17 (Continued)

Venture Number	Ownership, Company, and Country	Crude Refining Capacity (Barrels per day)
13	S.A. de la Raffinerie des Antilles (SARA)	11,000
	Ownership:	
	Royal Dutch/Shell Group 24%	
	Compagnie Francaise des Petroles .. 25%	
	French government (35)	
	Others (65)	
	Standard Oil Company (New Jersey) . 14.5%	
	Texaco Inc. 11.5%	
	Elf-Union 25%	
	French government agency	
	Location: Fort de France	
	NICARAGUA	
14	Esso Standard Oil SA Ltd.	22,000
	Ownership:	
	Standard Oil Co. (New Jersey)	
	Location: Managua	
	PANAMA	
15	Refineria Panama SA	75,000
	Ownership:	
	Universal Tankships Inc. 33.3%	
	Central Industries Inc. 33.3%	
	National Bulk Carriers	
	Ultramar Panama Inc. 33.3%	
	Ultramar Co. Ltd.	
	Location: Payardi Island (Las Minas)	
	PUERTO RICO	
16	Commonwealth Oil Refining Co. Inc.	111,000
	Ownership: a	
	Location: Guynilla	

(continued)

TABLE A17 (Continued)

Venture Number	Ownership, Company, and Country	Crude Refining Capacity (Barrels per day)
17	Caribbean Gulf Refining Corp.	40,000
	Ownership: Gulf Oil Corp.	
	Location: Bayamon	
	TRINIDAD	
18	Texaco Trinidad Inc.	361,000
	Ownership: Texaco Inc.	
	Location: Two Refineries, Point-a-Pierre (355,000), Brighton (6,000)	
19	Shell Trinidad Ltd.	80,000
	Ownership: Royal Dutch/Shell Group	
	Location: Point Fortin	
	MEXICO	
20	Petroleos Mexicanos	592,000
	Ownership: State Owned	
	Location: Six Refineries, Atzcapotzalco (100,000), Cuidad Madero (169,000), Minatitlan (175,500), Poza Rica (27,000), Reynosa (20,500), Salamanca (100,000)	

(continued)

TABLE A17 (Continued)

Venture Number	Ownership, Company, and Country	Crude Refining Capacity (Barrels per day)
	CUBA	
21	Cia Petrolera Shell de Cuba	27,000
	Ownership: State Owned	
	Location: Havana	
22	Esso Standard Oil Co.	46,000
	Ownership: State Owned	
	Location: Havana	
23	The Texas Co. (West Indies) Ltd.	20,000
	Ownership: State Owned	
	Location: Santiago de Cuba	

SOURCE: Compiled from data in World Oil, 1957-1971, The Oil and Gas Journal, 1957-1971, The International Petroleum Register, 1966-67, International Petroleum Encyclopedia, 1971-72, The USA Oil Directory, 1972, and Worldwide Directory; Refining and Gas Processing, 1971-72.

[a]Percent ownership not available.

TABLE A18

OWNERSHIP, CAPACITY, AND LOCATION OF CRUDE OIL REFINERIES, MIDDLE EAST, 1971

Venture Number	Ownership, Company, and Country	Crude Refining Capacity (Barrels per day)
	BAHRAIN	
1	Bahrain Petroleum Co. Ltd.	205,000
	Ownership:	
	Standard Oil Co. of California 50%	
	Texaco Inc. 50%	
	Location: Awali	
	IRAN	
2	Iranian Oil Exploration and Producing Co.	78,000
	Ownership:	
	Iran Oil Participants Ltd.	
	National Iranian Oil Co.	
	Stated Owned (Agency participantion)	
	British Petroleum Co. 40%	
	Bataafse Petroleum Maatschappij N.V. 14%	
	Royal Dutch/Shell Group	
	Standard Oil Co. of California .. 7%	
	Gulf Oil Corp. 7%	
	Standard Oil Co. (New Jersey) ... 7%	
	Mobil Oil Corp. 7%	
	Texaco Inc. 7%	
	Compagnie Francaise des Petroles. 6%	
	French government (35)	
	Others (65)	
	Iricon Agency Ltd. 5%	
	American Independent Oil Co. 0.833%	
	R. J. Reynolds Industries Inc.	
	Atlantic Richfield Co. 1.677%	

(continued)

TABLE A18 (Continued)

Venture Number	Ownership, Company, and Country	Crude Refining Capacity (Barrels per day)
	Getty Oil Co. ..... 0.417% Tidewater Oil Co. .... 0.417% Getty Oil Co. San Jacinto Petroleum Co. ..... 0.417% Continental Oil Co. Signal Oil an- Gas Co. 0.833% Standard Oil Co.(Ohio) 0.417%	
	Location: Masjid-i-Sulaiman	
3	Iranian Oil Refining Co.	460,000
	Ownership: Same as Venture Number 2	
	Location: Abadan	
4	National Iranian Oil Co.	109,200
	Ownership: State Owned	
	Location: Four Refineries, Alborz (10,000), Kermanshah (4,000), Nafti-z-Shah (5,200), Teheran (90,000)	
5	Pems Oil Co.	1,000
	Ownership: a	
	Location: Teheran	

(continued)

TABLE A18 (Continued)

Venture Number	Ownership, Company, and Country	Crude Refining Capacity (Barrels per day)
	IRAQ	
6	Government Oil Refineries Administration	99,250
	Ownership: State Owned	
	Location: Five Refineries, Alwand (12,250), Baghdad (75,000), Basrah (4,000), Haditha (6,000), Qai Jarah (2,000)	
7	Iraq Petroleum Co. Ltd.	2,300
	Ownership: British Petroleum Exploration Co. . 23.7% Shell Petroleum Co. Ltd. ..... 23.7% Royal Dutch/Shell Group Compagnie Francaise des Petroles . 23.7% French government (35) Near East Development Corp. ..... 23.7% Standard Oil Co. (New Jersey)(50) Mobil Oil Corp. (50) Participations and Exploration Corp Corp. ..... 5.0% C. S. Guebenkian Estate	
	Location: Kirkuk	
	ISRAEL	
8	Haifa Refineries Ltd.	140,000
	Ownership: State Owned	
	Location: Haifa	

(continued)

TABLE A18 (Continued)

Venture Number	Ownership, Company, and Country	Crude Refining Capacity (Barrels per day)
	JORDAN	
9	Jordan Petroleum Refinery Co. Ltd.	11,081
	Ownership: a	
	Location: Zerka	
	KUWAIT	
10	American Independent Oil Co. Inc.	144,000
	Ownership: R. J. Reynolds Industries, Inc.	
	Location: Mena Abdulla	
11	Kuwait National Petroleum Co.	130,000
	Ownership: Government ..... 60% Local private capital 40%	
	Location: Shuaiba	
12	Kuwait Oil Co. Ltd.	290,000
	Ownership: Gulf Kuwait Co. ..... 50% BP Kuwait Co. 50%	
	Location: Mina-al-Ahmadi	
	LEBANON	
13	Iraq Petroleum Co. Ltd.	36,000
	Ownership: Same as Venture Number 7	
	Location: Tripoli	

(continued)

TABLE A18 (Continued)

Venture Number	Ownership, Company, and Country	Crude Refining Capacity (Barrels per day)
14	Mediterranean Refining Co.	18,500
	Ownership: Mobil Oil Corp. ..... 50% Chevron Overseas Petroleum ..... 50% Standard Oil Co. of California (50) Texaco Inc. (50)	
	Location: Sidon	
	NEUTRAL ZONE	
15	Arabian Oil Co. Ltd.	30,000
	Ownership: Japanese Petroleum Trading Co. .....80% Japanese government Saudi Arabian government ..... 10% Kuwait overnment 10%	
	Location: Khafji	
16	Getty Oil Co.	50,000
	Ownership: Getty Oil Co.	
	Location: Mina Saud	
	QATAR	
17	National Oil Distribution Co.	680
	Ownership: a	
	Location: Umm Said	

(continued)

TABLE A18 (Continued)

Venture Number	Ownership, Company, and Country	Crude Refining Capacity (Barrels per day)
	SAUDI ARABIA	
18	Arabian American Oil Co.	495,000
	Ownership: Standard Oil Co. of California .... 30% Standard Oil Co. (New Jersey) ..... 30% Texaco Inc. ..... 30% Mobil Oil Corp. 10%	
	Location: Ras Tanura	
19	Jeddah Oil Refining Co.	12,000
	Ownership: State Owned	
	Location: Jeddah	
	SOUTH YEMEN	
20	BP Refinery (Aden) Ltd.	178,000
	Ownership: British Petroleum Co. Ltd.	
	Location: Little Aden	
	SYRIA	
21	General Petroleum Authority	54,000
	Ownership: State Owned	
	Location: Homs	

(continued)

TABLE A18 (Continued)

Venture Number	Ownership, Company, and Country	Crude Refining Capacity (Barrels per day)
	TURKEY	
22	Anadolu Tasfiyehanesi AS	94,000
	Ownership: Mobil Oil Corp. ..... 56% British Petroleum Co. Ltd. ..... 17% Shell Petroleum Co. Ltd. ..... 27% Royal Dutch/Shell Group	
	Location: Mersin	
23	Istanbul Petrol Refinerisi AS	110,000
	Ownership: Chevron Oil Europe Ltd. ..... Standard Oil Co. of California ..49% Texaco Oil Europe Co. Ltd. ..... Texaco Inc. Turkiye PetroLeri A.O. ..... 51% State Owned	
	Location: Izmit	
24	Turkish Petroleum Co. (Also called Turkiye Petrolleri Anonim Ortakligi)	83,000
	Ownership: Stated controlled	
	Location: Two Refineries, Batman (17,000), Izmir (66,000)	

SOURCE: Compiled from data in World Oil, 1957-1971, The Oil and Gas Journal, 1957-1971, The International Petroleum Register, 1966-67, International Petroleum Encyclopedia, 1971-72, The USA Oil Directory, 1972, and Worldwide Directory; Refining and Gas Processing, 1971-72.

[a]Percent ownership not available.

TABLE A19

OWNERSHIP, CAPACITY, AND LOCATION OF CRUDE OIL REFINERIES, SOUTH AMERICA, 1971

Venture Number	Ownership, Company, and Country	Crude Refining Capacity (Barrels per day)
	ECUADOR	
1	Anglo Eduadorian Oilfields Ltd.	28,000
	Ownership: Lobitos Oil Fields Ltd. Burmah Oil Co. Ltd. South American Gold and Platinum	
	Location: La Libertad	
2	Petroleos Gulf del Ecuador CA	7,300
	Ownership: Gulf Oil Corp.	
	Location: La Labertad	
3	Texaco Petroleum Co.	1,000
	Ownership: Texaco Inc. ..... 50% Gulf Oil Corp. 50%	
	Location: Lago Agrio	
	PERU	
4	Petroleos del Peru	91,100
	Ownership: State Owned	
	Location: Three Refineries, Iquitos (1,100), La Pampilla (30,000), Talara (60,000)	

(continued)

TABLE A19 (Continued)

Venture Number	Ownership, Company, and Country	Crude Refining Capacity (Barrels per day)
5	Refineria Conchan Chevron SA	12,000
	Ownership: Standard Oil Co. of California .... 35% Peruvian Interest 65%	
	Location: Lima	
6	Cia. de Petroleo Ganso Azul Ltd.	2,500
	Ownership: Atlantic Richfield Co.	
	Location: Pucallpa	
	PARAGUAY	
7	Refineria Paraguay SA	5,000
	Ownership: Local private capital	
	Location: Asuncion	
	COLOMBIA	
8	Empresa Colombiana de Petroleos	110,000
	Ownership: State Owned	
	Location: Barrancabermeja	
9	International Petroleum (Colombia) Ltd.	55,900
	Ownership: Esso Standard (Inter-America Inc.) Standard Oil Co. (New Jersey)	
	Location: Two Refineries, Cartagena (50,000), LaDorada (5,900)	

(continued)

TABLE A19 (Continued)

Venture Number	Ownership, Company, and Country	Crude Refining Capacity (Barrels per day)
10	Colombian Petroleum Co.	4,200
	Ownership: Mobil Oil Corp. ..... 50% Texaco Inc. 50%	
	Location: Tibu	
11	Texas Petroleum Co.	3,250
	Ownership: Texaco Inc.	
	Location: Two Refineries, Guamo (2,200), Orito (1,050)	
	CHILE	
13	Empresa Nacional del Petroleo	136,000
	Ownership: State Owned	
	Location: Two Refineries, Concepcion (72,000), Concon (64,000)	
	ARGENTINA	
14	Yacimientos Petroliferos Fiscales	381,200
	Ownership: State Owned	
	Location: Seven Refineries, Campo Duran (30,000), Dock Sud (6,000), La Plata (192,000), Lujan de Cuyo (113,000), San Lorenzo (35,000), Plaza Huincul (5,000), El Centauro (200)	

(continued)

TABLE A19 (Continued)

Venture Number	Ownership, Company, and Country	Crude Refining Capacity (Barrels per day)
15	Shell Compania Argentina de Petroleo SA	115,000
	Ownership: Royal Dutch/Shell Group	
	Location: Buenos Aires	
16	Esso Sociedad Anonima Petrolera Argentina	107,000
	Ownership: Standard Oil Co. (New Jersey)	
	Location: Two Refineries, Campana (90,000), Galvan (17,000)	
17	Astrasur, Refinerias Patagonicas de Petroleo	7,500
	Ownership: Local private capital	
	Location: Comodoro Rivadavia	
18	Condor Sociedad Anonima Petrolera Argentina	1,500
	Ownership: Local private capital	
	Location: Lomas de Zamora	
19	Rafineria de Petroleo la Isaura SA	8,800
	Ownership: Local private capital	
	Location: Bahia Blanca	
	BOLIVIA	
20	Yacimientos Petroliferos Fiscales Bolivianos (YPFB)	22,800

(continued)

TABLE A19 (Continued)

Venture Number	Ownership, Company, and Country	Crude Refining Capacity (Barrels per day)
	Ownership: State Owned	
	Location: Five Refineries, Santa Cruz (3,000), Camiri (1,200), Cochabamba (1,400), Sucre (4,000), Sanandita (600)	
	BRAZIL	
21	Petroleo Brasileiro, SA	507,200
	Ownership: State Owned	
	Location: Six Refineries, Belo Horizonte (63,000), Cubatao (Sal Paulo) (126,700), Fortaleza (Ceara (2,000), Mataripe (Bahia) (89,000), Porto Alegre (63,000), Rio de Janeiro (Duque de Caxias) (163,500)	
22	Companhia de Petroleo da Amazonia	7,000
	Ownership: Local private capital	
	Location: Manaus	
23	Refinaria de Petroleo Cepiranga SA	9,300
	Ownership: State Owned	
	Location: Rio Grande	
24	Refinaria e Exploracao de Petroleo	31,000
	Ownership: Local private capital	
	Location: Sao Paulo	

(continued)

TABLE A19 (Continued)

Venture Number	Ownership, Company, and Country	Crude Refining Capacity (Barrels per day)
25	Industrias Matarazzo de Energia, SA	1,500
	Ownership: Local private capital	
	Location: Sao Paulo	
26	Refinaria de Petroleos de Manguinhos SA	10,000
	Ownership: Local private capital	
	Location: Rio de Janeiro	
	URUGUAY	
27	Administracion Nacional de Combustibles, Alcohol y Portland	43,000
	Ownership: State Owned	
	Location: Montevideo	
	VENZUELA	
28	Chevron Oil Co. of Venezuela	65,000
	Ownership: Standard Oil Co. of California	
	Location: Bajo Grande	
29	Cia. Shell de Venezuela	404,000
	Ownership: Shell Western Holding Ltd. Royal Dutch/Shell Group	
	Location: Two Refineries, Cardon (369,000), San Lorenzo (35,000)	

(continued)

TABLE A19 (Continued)

Venture Number	Ownership, Company, and Country	Crude Refining Capacity (Barrels per day)
30	Creole Petroleum Corp.	563,000
	Ownership: Standard Oil Co. (New Jersey)	
	Location: Two Refineries, Amuay Bay (475,000), Caripito (88,000)	
31	Mobil Oil de Venequela	100,000
	Ownership: Mobil Oil Corp.	
	Location: El Palito	
32	Sinclair Venzuelan Oil Co.	44,900
	Ownership: Atlantic Richfield Co.	
	Location: Two Refineries, Puerto La Cruz (39,500), San Silvestre (5,400)	
33	Texas Petroleum Co.	10,000
	Ownership: Texas Inc.	
	Location: Tucupita	
34	Venezuela Gulf Refining Co.	159,000
	Ownership: Mene Grande Oil Co. ..... 63 1/3% Venezuela Gulf Oil Co. Gulf Oil Corp. Texaco Inc. 36 2/3%	
	Location: Puerto La Cruz	

(continued)

TABLE A19 (Continued)

Venture Number	Ownership, Company, and Country	Crude Refining Capacity (Barrels per day)
35	Phillips Petroleum Co.	4,500
	Ownership: Phillips Petroleum Co.	
	Location: San Rogue	
36	Corporacion Venzalana del Petroleo	25,000
	Ownership: State Owned	
	Location: Moron	
37	Sinclair Oil and Refining Co.	5,400
	Ownership: Atlantic Richfield Co.	
	Location: Barinas	

SOURCE: Compiled from data in World Oil, 1957-1971, The Oil and Gas Journal, 1957-1971, The International Petroleum Register, 1966-67, International Petroleum Encyclopedia, 1971-72, The USA Oil Directory, 1972, and Worldwide Directory; Refining and Gas Processing, 1971-72.

TABLE A20

OWNERSHIP, CAPACITY, AND LOCATION OF CRUDE OIL REFINERIES
EUROPE, 1971

Venture Number	Ownership, Company, and Country	Crude Refining Capacity (Barrels per day)
	AUSTRIA	
1	Mobil Oil Austria A.G.	4,500
	Ownership: Mobil Oil Corp.	
	Location: Vienna	
2	Shell Austria A.G.	5,000
	Ownership: Royal Dutch/Shell Group	
	Location: Floridsdorf	
3	Osterreichische Mineralolverwaltung A.G. (OMV)	155,000
	Ownership: State Owned	
	Location: Schwechat	
	BELGIUM	
4	Albatros SA Belge pour le Raffinage de Petrole	60,000
	Ownership: Societe Nationale de Recherches et d'Exploitation des Petroles en Algerie (SN REPAL) Algerian government ..... 40% ELF/ERAP ..... 40.15% Other French companies 19.85%	
	Location: Antwerp	

(continued)

TABLE A20 (Continued)

Venture Number	Ownership, Company, and Country	Crude Refining Capacity (Barrels per day)
5	Belgian Shell Co. NV	9,000
	Ownership: Royal Dutch/Shell Group	
	Location: Ghent	
6	Esso Belgium SA	95,000
	Ownership: Standard Oil Co. (New Jersey) (99.9%)	
	Location: Antwerp	
7	SA Chevron Belgium NV	105,000
	Ownership: Standard Oil Co. of California	
	Location: Felvy	
8	Raffinerie Belge de Petroles SA (RBP)	100,000
	Ownership: Signal Oil & Gas Co. ..... 70% The Signal Companies Inc. Sinclair Belgium SA Atlantic Richfield Co. Occidental Petroleum Corp.	
	Location: Antwerp	
9	Ste. Industrielle Belge des Petroles SA	315,000
	Ownership: Petrofina SA ..... 50% British Petroleum Co. Ltd. 50%	
	Location: Antwerp	

(continued)

TABLE A20 (Continued)

Venture Number	Ownership, Company, and Country	Crude Refining Capacity (Barrels per day)
10	Texaco Belgium NV	120,000
	Ownership: Texaco Inc.	
	Location: Ghent	
	DENMARK	
11	A/S Shell Raffinaderiet	61,000
	Ownership: Royal Dutch/Shell Group	
	Location: Fredericia	
12	Dansk Esso A/S	72,000
	Ownership: Standard Oil Co. (New Jersey)	
	Location: Kalundborg	
13	Gulf Oil Refining A/S	94,500
	Ownership: Gulf Oil Corp.	
	Location: Skaelskor	
	FINLAND	
14	Neste Oy Corp.	168,000
	Ownership: State Owned	
	Location: Two Refineries, Naantali (56,000), Porvoo (112,000)	

(continued)

TABLE A20 (Continued)

Venture Number	Ownership, Company, and Country	Crude Refining Capacity (Barrels per day)
15	Antar Petroles de l'Atlantique	287,000
	Ownership: Societe Socantar ..... 55% French government (51) Others 45%	
	Location: Three Refineries, Valenciennes (78,000), Donges (78,000), Vern (31,000)	
16	Compagnie de la Raffinerie de L'lle de France (ELF)	75,000
	Ownership: ELF/Union ELF/ERAP ..... 33.3% French government agency Societe Nationale de Recherches et d'Exploitation des Petroles en Algerie (SN REPAL) ..... 33.3% Algerian government .... 40% ELF/ERAP ..... 40.15% French government agency Compagnie Franciere de Recherches Petrolieres (COFIREP) ..... 5.33% Holding company (French) Others (French banking and investment companies) .. 14.52% Groupement des Exploitants Petrolieri 33.3%	
	Location: Grandpuits	

(continued)

TABLE A20 (Continued)

Venture Number	Ownership, Company, and Country	Crude Refining Capacity (Barrels per day)
17	Cie. Francaise de Raffinage (CFR)	557, 000
	Ownership: Compagnie Francaise des Petroles (CFP) French government (35) Others (65)	
	Location: Two Refineries, Gonfreville (325,000), La Mede (232,000)	
18	Cie. de Raffinage Shell-Berre	435,000
	Ownership: Shell Francaise ..... 60% Royal Dutch/Shell Group Compagnie des Produits Chemiques et Raffineries de Berre (PCRB) 40%	
	Location: Three Refineries, Berre l' Etang (165,000), Pauillac (90,000), Petit Couronne (180,000)	
19	Cie. Rhenane de Raffinage	75,000
	Ownership: Royal Dutch/Shell Group ..... 85% ELF/Union Industrielle des Petroles (UIP) ..... 10% ELF/Union (60) ELF/ERAP (33.3) Groupement des Exploitants Petrolieri (33.3) Societe Nationale de Recherches d' Exploitation des Petroleos en Algerie (SN REPAL) (33.3) Algerian government (40) ELF/ERAP (40) French companies (20) Caltex Group (40) Standard Oil Co. of California (50) Texaco Inc. (50)	

(continued)

TABLE A20 (Continued)

Venture Number	Ownership, Company, and Country	Crude Refining Capacity (Barrels per day)
	Location: Reichstett	
20	ELF Rhone Alpes	120,000
	Ownership:	
	ELF/Union 58%	
	ELF/ERAP (33.3)	
	Groupement des Exploitants Petroliere (33.3)	
	Societe Nationale de Recherches d'Exploitation des Petroleos en Algerie (SN REPAL) (33.3)	
	Algerian government (40)	
	ELF/ERAP (40)	
	French companies (20)	
	Caltex Group 32%	
	Standard Oil Co. of California (50)	
	Texaco Inc. (50)	
	Location: Feyzin	
21	ELF/Union	138,000
	Ownership:	
	ELF/ERAP 33.3%	
	Groupment des Exploitants Petroliere 33.3%	
	Societe Nationale de Recherches d' Exploitation des Petroleos en Angerie (SN REPAL) 33.3%	
	Algerian government (40)	
	ELF/ERAP (40)	
	French companies (20)	
	Location: Two Refineries, Gargenville (66,000), Grandpvits (72,000)	

(continued)

TABLE A20 (Continued)

Venture Number	Ownership, Company, and Country	Crude Refining Capacity (Barrels per day)
22	Esso Standard SAF	276,000
	Ownership: United Petroleum Securities Corp. Standard Oil Co. (New Jersey (77.5) Gulf Oil Corp. (22.5)	
	Location: Three Refineries, Port Jerome (150,000), Bordeaux (56,000), Fos-sur-Mer (70,000)	
23	Mobil Oil Francaise	161,800
	Ownership: Mobil Oil International Oil Co. Mobil Oil Corp.	
	Location: Two Refineries, Gravenchon (78,300), Frontigan (83,500)	
24	Ste. Francaise des Petroles BP	300,000
	Ownership: British Petroleum Co. Ltd.	
	Location: Three Refineries, Dunkirk (125,000), Lavera (98,000), Vernon (77,000)	
25	Ste. de la Raffinerie de Lorraine	100,000
	Ownership: ELF/Union ..... 9% SN REPAL (33.3) ELF/ERAP (33.3) Groupement des Exploitant Petrolieri (33.3) Esso Standard S.A. ..... 40% Standard Oil Co. (New Jersey) Cie. Francaise de Raffinage (CFR) . 51% Compagnie Francaise des Petroles (CFP) (50.4%)	
	Location: Hauconcourt	

(continued)

TABLE A20 (Continued)

Venture Number	Ownership, Company, and Country	Crude Refining Capacity (Barrels per day)
26	Ste. Raffinerie de Strasbourg	100,000
	Ownership:	
	Compagnie Francaise des Petroles (CFP) 20%	
	French government (35)	
	Others (65)	
	Compagnie Francaise de Raffinage (CFR) 20%	
	Compagnie Francaise des Petroles (CFP) (50.4)	
	French government(35)	
	Others (65)	
	Antar-Petroleos de 1' Atlantique 20%	
	Societe Socantor (55)	
	French state (51)	
	Others (49)	
	Pechelbronn S.A.E.M. 20%	
	Societe Socantor (55)	
	French state (51)	
	Others (49)	
	Societe Francaise des Petroles BP (SF-BP) 20%	
	British Petroleum Co. Ltd.	
	Location: Herrlisheim Bas-Rhin	
27	ELF/Union Industrielle (ELF)	40,000
	Ownership:	
	ELF/Union 60%	
	ELF/ERAP (33.3)	
	SN REPAL (33.3)	
	Algerian government (40)	
	ELF/ERAP (40)	
	French companies (20)	
	Groupement des Exploitants Petrolieri (33.3)	
	Caltex Group 40%	
	Standard Oil Co. of California (50)	
	Texaco Inc. (50)	
	Location: Ambes	

(continued)

TABLE A20 (Continued)

Venture Number	Ownership, Company, and Country	Crude Refining Capacity (Barrels per day)
	GREECE	
28	Hellenic Petroleum Refining Co.	40,000
	Ownership:	
	Hellenic Shipyards 71%	
	National Bank of Greece, Mobil Oil Corp., S. Syriotios, D. Carapanos 29%	
	Location: Aspropyrgos (Near Athens)	
29	Thessaloniki Refining Co.	70,000
	Ownership:	
	Esso Pappos Industrial Co.	
	Standard Oil Company (New Jersey) (majority)	
	Others (minority)	
	Location: Thessaloniki	
	ITALY	
30	AGIP Mineraria SPA	3,000
	Ownership:	
	Ente Nazionali Idrocarburi (ENI) .. 79.87%	
	State agency	
	Others 21.13%	
	Location: Cortemaggiore	
31	Amoco Italia SPA	90,000
	Ownership:	
	American International Oil Co.	
	Standard Oil Co. (Indiana)	
	Location: Cremona	

(continued)

TABLE A20 (Continued)

Venture Number	Ownership, Company, and Country	Crude Refining Capacity (Barrels per day)
32	ANIC SPA	212,000
	Ownership: Ente Nazional Indracarburi (ENI) . 65% State agency Others 35%	
	Location: Two Refineries, Gela (Sicily) (92,000), San Nazarro (Pavia) (12,000)	
33	Anonima Petroli Itaniana (API)	81,000
	Ownership: a	
	Location: Falconara	
34	Aquila SPA	50,000
	Ownership: Compagnie Francaise des Petroles (CFP) ..... 23% French government (35) Others (65) Total Societa Italiana per Azioni . 69% Compagnie Francaise des Petroles	
	Location: Trieste	
35	BP Italiana SPA	80,000
	Ownership: British Petroleum Co. Ltd.	
	Location: Milan	
36	Delleiane Raffaele	2,400
	Ownership: a	
	Location: Genoa	

(continued)

TABLE A20 (Continued)

Venture Number	Ownership, Company, and Country	Crude Refining Capacity (Barrels per day)
37	Fina Italiana SPA	6,500
	Ownership: Petrofina S.A. Belgian capital	
	Location: Milan	
38	Garrone Edoardo	146,280
	Ownership: Private Italian capital	
	Location: Genoa	
39	Industrie Chimiche Italiane de' Petrolio (ICIP)	65,000
	Ownership: Italian capital	
	Location: Mantova	
40	Industria Leganti Stradali del Affini (ILSEA)	8,300
	Ownership: a	
	Location: Como	
41	Industria Raffinazione Olii Minerali (IROM)	90,000
	Ownership: AGIP SPA ..... 51% Ente Nazionale Indracarburi (ENI) Italian government co. British Petroleum Co. Ltd. 49%	
	Location: Porto Marghera	

(continued)

TABLE A20 (Continued)

Venture Number	Ownership, Company, and Country	Crude Refining Capacity (Barrels per day)
42	Industria Piemontese Lavorazione Olii Minerali	33,000
	Ownership: a	
	Location: Busalla (Genoa)	
43	Lombarda Petroli	26,000
	Ownership:	
	Location: Villasanta (Milan)	
44	Mediterranea SPA	505,000
	Ownership: Gulf Oil Corp. (majority) Others (minority)	
	Location: Milazzo (Sicily)	
45	Gulf Italiana SPA	80,000
	Ownership: Gulf Oil Corp.	
	Location: Bertonico	
46	Monteshell Petrochemi SPA	44,000
	Ownership: Royal Dutch/Shell Group ..... 50% Montecatini Edison SPA 50%	
	Location: Brindisi	
47	Nuova Raffineria NILO	12,000
	Ownership: a	

(continued)

TABLE A20 (Continued)

Venture Number	Ownership, Company, and Country	Crude Refining Capacity (Barrels per day)
	Location: Milan	
48	Mobil Oil Italiana	143,000
	Ownership: Mobil International Oil Co. Mobil Oil Corp.	
	Location: Naples	
49	Raffineria Monti	42,000
	Ownership: Getty Oil Co.	
	Location: Gaeta	
50	Raffineria di Roma SPA	85,000
	Ownership: Fina Italiana SPA ..... 80% Petrofina Belgian capital Total Societa Italiana per Azioni . . 20% Compagnie Francaise des Petroles (CFP) French government (35) Others (65)	
	Location: Rome	
51	Raffineria Olii Lubricant (ROL)	1,500
	Ownership: a	
	Location: Viguzzola	
52	Raffineria Sarde, SARAS	270,000
	Ownership: Esso Standard Italiani Standard Oil Co. (New Jersey)	

(continued)

TABLE A20 (Continued)

Venture Number	Ownership, Company, and Country	Crude Refining Capacity (Barrels per day)
	SARAS Sig. Angelo Moratti	
	Location: Cagliari (Sardinia)	
53	Raffinerie Siciliane Olii Minerali	312,000
	Ownership: Esso Standard Italiana Standard Oil Co. (New Jersey)	
	Location: Augusta (Sicily)	
54	Sanquirico Industria Petrolifera	29,000
	Ownership: a	
	Location: Genoa	
55	Sta. Italiana Resine SPA (Sardoil)	125,000
	Ownership: a	
	Location: Porto Torres (Sardina)	
56	Shell Italiana SPA	251,000
	Ownership: Royal Dutch/Shell Group	
	Location: Three Refineries, La Spezia (86,000), Rho (75,000), Taranto (90,000)	
57	Sincat SPA	330,000
	Ownership: Montecatini-Edison Group Royal Dutch/Shell Group Societa Edison SPA	

(continued)

TABLE A20 (Continued)

Venture Number	Ownership, Company, and Country	Crude Refining Capacity (Barrels per day)
	Location: Priolo	
58	Societa Azionaria Raffinazione Olii Minerali	162,000
	Ownership:	
	Esso Standard Italiana 60%	
	Standard Oil Co. (New Jersey)	
	Texaco SPA 28.3%	
	Chevron Oil Europe Inc.	
	Standard Oil Co. of California 11.7%	
	Texaco Inc.	
	Location: Ravenna	
59	Stanic Industria Petrolifera	160,000
	Ownership:	
	Esso Standard Italiana 50%	
	Standard Oil Co. (New Jersey)	
	ANIC SPA 50%	
	Ente Nazionale Idrocarburi (ENI)	
	Italian government co.	
	Location: Two Refineries, Bari (70,000), Leghorn (Livorno) (90,000)	
60	Sta. per Azioni Raffineria Padana Olii Minerali (SARPOM)	152,000
	Ownership:	
	Esso Standard Italiana 63.7%	
	Standard Oil Co. (New Jersey)	
	Texaco SPA 28.3%	
	Chevron Oil Europe	
	Standard Oil Co. of California 8.0%	
	Texaco Inc.	
	Location: Novara	

(continued)

TABLE A20 (Continued)

Venture Number	Ownership, Company, and Country	Crude Refining Capacity (Barrels per day)
61	Sta. Petrolifera Italiana SPA (SPI)	20,000
	Ownership: Phillips Petroleum Co. ..... 53% Others 47%	
	Location: Arcola (La Spezia) (20,000)	
62	Icroma-Raffineria Olii Minerali	47,000
	Ownership: a	
	Location: Busalla	
	NETHERLANDS	
63	BP Raffinaderij Nederland NV	322,000
	Ownership: British Petroleum Co. Ltd.	
	Location: Oostvoorne, (Rotterdam)	
64	Chevron Petroleum Mij (Nederland) NV	260,000
	Ownership: Standard Oil Co. of California .... 68.4% Texaco Inc. 31.6%	
	Location: Pernis	
65	Esso Nederland	350,000
	Ownership: Standard Oil Co. (New Jersey) (99.91%)	
	Location: Rotterdam	
66	Gulf Oil Raffinaderij NV	99,000
	Ownership: Gulf Oil Corp.	

(continued)

TABLE A20 (Continued)

Venture Number	Ownership, Company, and Country	Crude Refining Capacity (Barrels per day)
	Location: Rozenburg	
67	Mobil Oil NV	80,000
	Ownership: Mobil International Oil Co. Mobil Oil Corp.	
	Location: Amsterdam	
68	NV Smid & Hollander	6,500
	Ownership: Local private capital	
	Location: Amsterdam	
69	Shell Nederland	500,000
	Ownership: Royal Dutch/Shell Group	
	Location: Pernis	
	NORWAY	
70	Norske Esso A/S	119,000
	Ownership: Standard Oil Co. (New Jersey)	
	Location: Two Refineries, Tonsberg-Slagen (116,000), Tonsberg-Valloy (3,000)	
71	Norske Shell A/S	46,000
	Ownership: Royal Dutch/Shell Group	
	Location: Risvika (Sola)	

(continued)

TABLE A20 (Continued)

Venture Number	Ownership, Company, and Country	Crude Refining Capacity (Barrels per day)
	PORTUGAL	
72	Sociedade Anonima Concessionaria Da Rafinacao de Petroles Em Portugal	84,000
	Ownership:	
	Sociedade Portuguesa de Petroquimica (SARL) 33.33%	
	State owned (Portuguese)	
	Compagnie Francaise des Petroles (CFP) 8.75%	
	French government (35)	
	Soc. Nacional de Petroleos (SONAP) 10%	
	Private Portuguese interest 55.92%	
	Location: Two Refineries, Lisbon, Cabo Ruivo (37,000), Boa Nova, Porto (47,000)	
	SPAIN	
73	Asfaltos Espanoles, SA	18,000
	Ownership:	
	Cia Esponola de Petroles (CEPSA) .. 50%	
	Private Spanish capital	
	Cia Arrendataria del Monopolio de Petroleos SA 50%	
	State agency (Spain)	
	Location: Tarragona	
74	Cia Espanola de Petroleos (CEPSA)	266,000
	Ownership:	
	Private Spanish capital	
	Location: Two Refineries, Algeciras Bay (90,000), Santa Cruz de Teneriffe (Canary Islands) (176,000)	

(continued)

TABLE A20 (Continued)

Venture Number	Ownership, Company, and Country	Crude Refining Capacity (Barrels per day)
75	Cia Iberica Refinadora de Petroleos SA	120,000
	Ownership: Marathon International ..... 28% Marathon Oil Co. Spanish government ..... 52% Private capital ,..... 20%	
	Location: La Coruna	
76	Empresa Nacional Calvo Sotelo de Combustibles Liquidos y Lubricantes SA	70,000
	Ownership: State agency	
	Location: Puertollano	
77	Esso Petroleos Espanoles SA	88,000
	Ownership: Standard Oil Co. (New Jersey) ..... 50% Banco Espanol de Credito 50%	
	Location: Castellon de la Plana	
78	Refineria de Petroleos de Escombreras SA	220,000
	Ownership: Institute Nacional de Industria ... 52% State agency Cia Espanola de Petroles SA (CEPSA) 24% Spanish private capital Caltex Group ..... 24% Texaco Inc. (50) Standard Oil Co. of California (50)	
	Location: Escombreras	

(continued)

TABLE A20 (Continued)

Venture Number	Ownership, Company, and Country	Crude Refining Capacity (Barrels per day)
79	Rio Gulf de Petroleos SA	84,000
	Ownership: Gulf Oil Corp. ..... 50% Cia. Espanola de Minaide Rio Tinto SA 50%	
	Location: Huelva	
	SWEDEN	
80	AB Nynas-Petroleum	40,000
	Ownership: Johnson, A., & Co.	
	Location: Three Refineries, Nynasham (30,000), Malmo (4,000), Gothenburg (6,000)	
81	BP Raffinaderi (Goteborg) AB	116,000
	Ownership: British Petroleum Co. Ltd.	
	Location: Gothenburg	
82	Koppartrans Olje AB (Shell)	98,000
	Ownership: Royal Dutch/Shell Group	
	Location: Gothenburg	
	SWITZERLAND	
83	Raffinerie Du Sud-Ouest SA	55,000
	Ownership: Esso Standard (Switzerland) Standard Oil Co. (New Jersey)	

(continued)

TABLE A20 (Continued)

Venture Number	Ownership, Company, and Country	Crude Refining Capacity (Barrels per day)
	BP Benzen and Petroleum A.G. British Petroleum Co. Ltd. AGIP S.A. (Suisse) Ente Nazionale Idrocarburi (ENI) Texaco A.G. Texaco Inc. Socal S.A. Standard Oil Co. of California Total (Suisse) S.A. Compagnie Francaise des Petroles	
	Location: Collombey	
84	Raffinerie de Cressier SA	50,000
	Ownership: Shell Petroleum N.V. Royal Dutch/Shell Group Gulf Oil, Great Britain Ltd. Gulf Oil Corp.	
	Location: Neuchatel	
	UNITED KINGDOM ENGLAND	
85	Berry Wiggins & Co. Ltd.	9,800
	Ownership: Local private capital	
	Location: Two Refineries, Kingsnorth on Medway, Kent (6,200), Weaste (3,600)	
86	BP Refinery (Kent) Ltd.	256,000
	Ownership: The British Petroleum Co. Ltd.	
	Location: Isle of Grain	

(continued)

TABLE A20 (Continued)

Venture Number	Ownership, Company, and Country	Crude Refining Capacity (Barrels per day)
87	Burmah-Castrol Ltd.	31,755
	Ownership: a	
	Location: Two Refineries, Port (28,255), Manchester (3,500)	
88	Conoco Ltd., Humber Refinery	85,000
	Ownership: Continental Oil Co.	
	Location: South Killingholme	
89	Esso Petroleum Co. Ltd.	410,000
	Ownership: Standard Oil Co. (New Jersey)	
	Location: Fawley	
90	Lindsey Oil Refinery Ltd.	156,000
	Ownership: Petrofina S.A. Belgian capital Total Oil Great Britain Compagnie Francaise des Petroles French government (35) Others (65)	
	Location: Killingholme	
91	Mobil Oil Co. Ltd.	145,000
	Ownership: Mobil Oil Corp.	
	Location: Coryton	

(continued)

TABLE A20 (Continued)

Venture Number	Ownership, Company, and Country	Crude Refining Capacity (Barrels per day)
92	Phillips-Imperial Petroleum Ltd.	110,000
	Ownership: Phillips Petroleum Co. ..... 50% Imperial Chemical Industries Ltd. . 50%	
	Location: North Tees	
93	Philmac Oils Ltd.	7,800
	Ownership: Phillips Petroleum Co. ..... 50% Tarmac Ltd. 50%	
	Location: Eastham	
94	Shell Refining Co. Ltd.	564,000
	Ownership: Royal Dutch/Shell Ltd.	
	Location: Four Refineries, Heysham (39,000), Shell Haven (200,000), Stanlow (215,000), Teesport (110,000)	
	NORTHERN IRELAND	
95	BP Refinery Ltd.	35,000
	Ownership: British Petroleum Co. Ltd.	
	Location: Belfast	
	SCOTLAND	
96	BP Refinery (Grangemouth) Ltd.	200,000
	Ownership: The British Petroleum Co. Ltd.	
	Location: Grangemouth	

(continued)

TABLE A20 (Continued)

Venture Number	Ownership, Company, and Country	Crude Refining Capacity (Barrels per day)
97	Briggs Wm. & Sons Ltd.	1,600
	Ownership: Local private capital	
	Location: Dundee	
98	Shell Refining Co. Ltd.	6,000
	Ownership: Royal Dutch/Shell Group	
	Location: Ardrossan	
	WALES	
99	BP Refinery (Llandarcy) Ltd.	193,000
	Ownership: The British Petroleum Co. Ltd.	
	Location: Neath	
100	Esso Petroleum Co. Ltd.	130,000
	Ownership: Standard Oil Co. (New Jersey)	
	Location: Milford Haven	
101	Gulf Oil Co.	90,000
	Ownership: Gulf Oil Corp.	
	Location: Milford Haven	
102	Texaco Ltd.	130,000
	Ownership: Texaco Inc.	
	Location: Pembroke	

(continued)

TABLE A20 (Continued)

Venture Number	Ownership, Company, and Country	Crude Refining Capacity (Barrels per day)
	WEST GERMANY	
103	BP Benzin und Petroleum AG	335,000
	Ownership: The British Petroleum Co.	
	Location: Three Refineries, Dinslaken (115,000), Hamburg-Finkenwerder (110,000), Vohburg, Bavaria (110,000)	
104	Chevron Oil Europe Inc.	45,000
	Ownership: Chevron Oil Europe Inc. ..... 50% Standard Oil Co. of California Deutsche Texaco AG ..... 50% Texaco Inc.	
	Location: Raunheim (near Frankfurt)	
105	Deutsche Texaco AG	65,000
	Ownership: Texaco Inc. 97.3%	
	Location: Heide	
106	Deutsche Marathon Petroleum GmbH	60,000
	Ownership: Marathon International SA Marathon Oil Co.	
	Location: Burghausen	
107	Deutsche Shell AG	335,000
	Ownership: Royal Dutch/Shell Group	

(continued)

TABLE A20 (Continued)

Venture Number	Ownership, Company, and Country	Crude Refining Capacity (Barrels per day)
	Location: Four Refineries, Godorf (185,000), Harburg-Grasbrook (86,000), Ingolstadt (55,000), Monheim (9,000)	
108	ELF/Mineraloel GmbH	55,386
	Ownership: ELF/ERAP	
	Location: Speyer	
109	Erdolraffinerie Ingolstadt AG	65,000
	Ownership: Ente Nazionale Idrocarburi (ENI) Italian government co.	
	Location: Ingolstadt	
110	Erdol-Raffinerie Mannheim	79,000
	Ownership: Badishe Anilin und Sodafabrik ..... 60% Marathon Oil Co. 40%	
	Location: Mannheim	
111	Erdol-Raffinerie Neustadt GmbH	75,000
	Ownership: Gelsenkirchener Bergewerks AG ..... 50% Private German capital Mobil Oil Corp. 50%	
	Location: Neustadt-Donav	
112	Gulf-Erdoelwerke Frisia AG	50,000
	Ownership: Gulf Oil Corp.	
	Location: Emden	

(continued)

TABLE A20 (Continued)

Venture Number	Ownership, Company, and Country	Crude Refining Capacity (Barrels per day)
113	Esso AG	463,000
	Ownership: Standard Oil Co. (New Jersey)	
	Location: Four Refineries, Kohn (121,000), Hamburg-Harburg (74,000), Ingolstadt (90,000), Karlsruhe (178,000)	
114	Fina Bitumenwerke GmbH	10,600
	Ownership: Petrofina SA Belgian capital	
	Location: Mulheim	
115	Erdol Raffinerie Duisburg (ERD) GmbH	40,000
	Ownership: Petrofina SA Belgian capital	
	Location: Guisburg	
116	Gelsenberg AG	150,000
	Ownership: Mobil Oil AG ..... 50% Mobil Oil Corp. Gelsenberg AG 50%	
	Location: Gelsenkirchen-Horst	
117	Gewerkschaft Erdol-Raffinerie Deurag-Nerag	55,000
	Ownership: Badishe Anilin und Sodafabrik ..... 65% Private German capital	

(continued)

TABLE A20 (Continued)

Venture Number	Ownership, Company, and Country	Crude Refining Capacity (Barrels per day)
113	Esso AG	463,000
	Ownership: Standard Oil Co. (New Jersey)	
	Location: Four Refineries, Kohn (121,000), Hamburg-Harburg (74,000), Ingolstadt (90,000), Karlsruhe (178,000)	
114	Fina Bitumenwerke GmbH	10,600
	Ownership: Petrofina SA Belgian capital	
	Location: Mulheim	
115	Erdol Raffinerie Duisburg (ERD) GmbH	40,000
	Ownership: Petrofina SA Belgian capital	
	Location: Guisburg	
116	Gelsenberg AG	150,000
	Ownership: Mobil Oil AG ..... 50% Mobil Oil Corp. Gelsenberg AG 50%	
	Location: Gelsenkirchen-Horst	
117	Gewerkschaft Erdol-Raffinerie Deurag-Nerag	55,000
	Ownership: Badishe Anilin und Sodafabrik ..... 65% Private German capital	

(continued)

TABLE A20 (Continued)

Venture Number	Ownership, Company, and Country	Crude Refining Capacity (Barrels per day)
	Gewerkschaft Elwerath ..... 35% Standard Oil Co. (New Jersey) Deutsche Shell Royal Dutch/Shell Group	
	Location: Misburg	
118	Gewerkschaft Erdol-Raffinerie Emsland	74,178
	Ownership: Badishe Anilin und Sodafabrik ..... 65% Private German capital Gewerkschaft Elswerath ..... 35% Standard Oil Co. (New Jersey) Deutsche Shell Royal Dutch/Shell Group	
	Location: Lingen-Holthausen	
119	Klienholz Mineraloel GmbH	15,900
	Ownership: Private German capital	
	Location: Essen-Altenessen	
120	Mineraloil-und Asphaltwerke AG	11,700
	Ownership: Signal Oil and Gas Co. (majority) The Signal Companies Inc. Others (minority)	
	Location: Ostermoor	
121	Mobil Oil AG in Deutschland	104,200
	Ownership: Mobil Oil Corp. ..... 50% Gelsenberg AG 50%	

(continued)

TABLE A20 (Continued)

Venture Number	Ownership, Company, and Country	Crude Refining Capacity (Barrels per day)
	Location: Two Refineries, Bremen-Osleb-shausen (31,200), Woerth (73,000)	
122	Oberrheinische Mineralewerke GmbH	144,000
	Ownership:	
	Deutsche Texaco 37.5%	
	Texaco Inc.	
	Continental Oil Co. 25%	
	Veba Chemie AG 37.5%	
	Location: Karlsruhe	
123	Oelwerke Julius Schindler GmbH	8,350
	Ownership:	
	Private German capital	
	Location: Hamburg-Neuhof	
124	Saarland-Raffinerie GmbH	43,000
	Ownership:	
	Saarbergwerke 50%	
	Cie Francaise des Petroles 20%	
	French government (35)	
	Antar Petroles de l' Allantique ... 10%	
	Sociente Socantor (55)	
	French agency (51)	
	Others (49)	
	Union Generale des Petroles 10%	
	Charbonnages de France 5%	
	Houelleres de Lorraine 5%	
	Location: Klarenthal	
125	Union Rheinische Braunkohlen Draftstoff AG	125,000
	Ownership:	
	North Sea Exploration and Reasearch Co. Ltd. 40%	
	Others 60%	

(continued)

TABLE A20 (Continued)

Venture Number	Ownership, Company, and Country	Crude Refining Capacity (Barrels per day)
	Location: Wesseling	
126	Verba Chemie AG	162,000
	Ownership: Local German capital	
	Location: Gelsenkirchen-Buer	
127	Badishe Anilin und Sodafabik	4,747
	Ownership: German capital	
	Location: Salzbergen	
	IRELAND	
128	Irish Refining Co. Ltd.	55,000
	Ownership: British Petroleum Co. Ltd. Standard Oil Co. (New Jersey) Texaco Ltd. (20%) Texaco Inc. Royal Dutch/Shell Group	
	Location: Whitegate	

SOURCE: Compiled from data in World Oil, 1957-1971, The Oil and Gas Journal, 1957-1971, The International Petroleum Register, 1966-67, International Petroleum Encyclopedia, 1971-72, The USA Oil Directory, 1972, and Worldwide Directory; Refining and Gas Processing, 1971-72.

[a]Percent ownership not available.

BIBLIOGRAPHY

Primary Source

The primary sources of data are the Petroleum Publishing Company's Oil and Gas Journal and Gulf Publishing Company's World Oil. Oil and Gas Journal is published weekly and World Oil monthly. Both publications were surveyed from 1957 through 1971.

Interviews

Department of Justice. Personal Interview with William John Lamot, Staff Attorney, Antitrust Division, Washington, D.C.

Federal Trade Commission. Personal Interview with Frank Lipson, Staff Attorney, Bureau of Competition, Washington, D.C.

Gulf Publishing Company. Personal Interview with George B. Gibbs, Editorial Director, Hydrocarbon Processing Division, Houston, Texas.

Gulf Publishing Company. Personal Interview with Gene Kliewer, Special Projects Editor, World Oil, Houston, Texas.

Senate Subcommittee on Antitrust and Monopoly of the Committee on the Judiciary. Personal Interview with Dr. Walter Measdale, Staff Economist, Washington, D.C.

Senate Subcommittee on Antitrust and Monopoly of the Committee on the Judiciary. Personal Interview with Dr. David Martin, Staff Economist, Washington, D.C.

The Petroleum Publishing Company. Personal Interview with Donald W. Wilson, Managerial Directory Department, Oil and Gas Journal, Tulsa, Oklahoma.

The Petroleum Publishing Company. Personal Interview with John C. McCaslin, Exploration Editor, Oil and Gas Journal, Tulsa, Oklahoma.

Personal Interview with Arthur S. Miller, Professor of Law, The George Washington University, Washington, D.C.

Personal Interview with James E. Hickey, Counsellor at Law, Law Offices of Northcutt Ely, Washington, D.C., Research Assistant for government report, Summary of Mining and Petroleum Laws of the World, compiled for the United States Department of Interior, Bureau of Mines.

Personal Interview with Jerry S. Cohen, former Staff Director and Chief Counselor on the Senate Subcommittee on Antitrust and Monopoly of the Committee on the Judiciary, Governmental Intervention in the Market Mechanism: The Petroleum Industry.

Articles, Professional Journals and Proceedings

Bergman, Michael. "The Corporate Joint Venture Under the Antitrust Laws." New York University Law Review, Vol. 37 (June, 1962), pp. 712-734.

Blauvelt, Howard W. "How to Become a Foreign Oil Company," Exploration and Economics of the Petroleum Industry, New Ideas, New Methods, New Developments, Vol. IV, Edited by Virginia S. Cameron. Houston: Gulf Publishing Company, 1966, pp. 265-292.

Cree, Allen. "Problems of Exploration Abroad." Exploration and Economics of the Petroleum Industry, New Ideas, New Methods, New Developments, Vol. IV, Edited by Virginia S. Cameron. Houston: Gulf Publishing Company, 1966, pp. 93-113.

Cordtz, Dan. "Their Holding Their Feet to the Fire." Fortune, Vol. 82 (July, 1970), pp. 78-130.

Dixon, Paul Rand. "Joint Ventures: What is Their Impact on Competition?" The Antitrust Bulletin, VII (May-June, 1962), pp. 397-410.

Mead, Walter J. "The Structure of the Buyer Market for Oil Shale Resources." Natural Resources Journal, Vol. 8 (October, 1968), pp. 604-631.

West, Malcolm W., Jr. "Thinking Ahead: The Jointly Owned Subsidiary." Harvard Business Review, Vol. 37 (July-August, 1959), 31-172.

Fortune. May 71, August 71, May 72, August 72.

Selected articles from Oil and Gas Journal and World Oil.

The Wall Street Journal, December 3, 1971.

Public Documents

Newspaper Enterprise Association, Inc. The World Almanac and Book of Facts: 1972 Edition. Edited by Luman H. Long. Doubleday and Co., Inc., 1971.

Peterson, Peter G. The United States in a Changing World Economy. Report to the President and to the Council on International Economic Policy, Washington, D.C., April 1971. Washington, D.C.: U.S. Government Printing Office, 1971.

U. S. Department of Commerce. Bureau of the Census. Statistical Abstract of the United States: 1971. 92nd Edition. Washington, D.C., 1971.

U. S. Congress. The Future of the U.S. Foreign Trade Policy. Hearings before the Subcommittee on Foreign Trade Policy of the Joint Economic Committee, 90th Congress, 1st Session, 1967.

U. S. Congress. Senate. The International Petroleum Cartel. Staff Report to the Federal Trade Commission, released through Subcommittee on Monopoly of Select Committee on Small Business, 83rd Congress, 2nd Session, 1952.

U. S. Congress. Senate. Emergency Oil Lift Program and Related Oil Problems. Joint Hearings before Subcommittee of the Committee on the Judiciary and Committee on Interior and Insular Affairs, U.S. Senate, 85th Congress, 1st Session, 1957.

U. S. Congress. Senate. Governmental Intervention in the Market Mechanism: The Petroleum Industry. Hearings before the Subcommittee on Antitrust and Monopoly of the Committee on the Judiciary, U.S. Senate, 91st Congress, 2nd Session, 1970.

U. S. Congress. House. Interstate Oil and Gas Compact. Hearings before Interstate and Foreign Commerce Committee, U.S. House of Representatives, 81st Congress, 1st Session, 1951.

Books

Arabian American Oil Company. Aramco Handbook Oil and the Middle East. Dhahran, Saudi Arabia: Arabian American Oil Company, 1968.

Ayres, C. E. The Theory of Economic Progress. 4th ed., New York: Schocken Books, 1962.

Bain, Joe S. Pacific Coast Petroleum Industry. 3 Volumes, Berkeley, California: University of California Press, 1944.

Bazelon, David T. The Paper Economy. New York: Random House, 1959.

Berle, Adolf A. Jr. The 20th Century Capitalist Revolution. New York: Harcourt, Brace, & Company, 1955.

Berle, Adolf A., and Means, Gardiner C. The Modern Corporation and Private Property. New York: Commerce Clearing, 1932.

Brooke, Michael Z., and Remmers, H. Lee. The Strategy of Multinational Enterprise, Organization and Finance. New York: American Elsevier Publishing Company, Inc., 1970.

Engler, Robert. The Politics of Oil. 2nd ed., The University of Chicago Press, 1961.

Fanning, Leonard M., ed. Our Oil Resources. New York: McGraw Hill, 1950.

Franco, Lawrence G. Joint Venture Survival In Multinational Corporations. New York: Praeger Publishers, 1970.

Friedman, Milton. Capitalism and Freedom. Chicago: Chicago University Press, 1962.

Friedmann, Wolfgang G., and Beguin, Jean-Pierre. Joint International Business Ventures in Developing Countries. New York: Columbia University Press, 1967.

Friedmann, Wolfgang S. and Kalmanoff, George, ed. Joint International Business Ventures. New York: Columbia University Press, 1961.

Galbraith, John Kenneth. The New Industrial State. Boston: Houghton Mifflin Company, 1967.

Gilluly, James, Waters, Aaron C. Woodford, A. O. Principles of Geology. 3rd Edition, San Francisco: W. W. Freeman and Company, 1968.

Marx, Karl. Capital, A Critique of Political Economy. Edited by Frederick Engels, Translated by Samuel Moore and Edward Aveling. New York: Modern Library, 1936.

McLean, John G., and Haigh, Robert Wm. The Growth of Integrated Oil Companies. Boston: Harvard University Press, 1954.

O'Connor, Harvey. The Empire of Oil. New York: Monthly Review Press, 1955.

Palmer Publication. The International Petroleum Register. New York: Palmer Publication, 1966-67.

Peach, W.N., and Constantin. Zimmermann's World Resources and Industries. 3rd Edition, New York: Harper & Row, Publishers, 1972.

Pearson, Scott R. Petroleum and the Nigerian Economy. Stanford, California: Stanford University Press, 1970.

Schurr, Sam H., Homan, Paul T., and Others. Middle Eastern Oil and the Western World: Prospects and Problems. New York: American Elsevier Publishing Company, Inc., 1971.

Smith, Adam. An Inquiry Into the Nature and Causes of the Wealth of Nations. 4th ed., Edited by Edwin Cannon. London: Methuen & Co., Ltd., 1904.

Tanzer, Michael. The Political Economy of International Oil and the Underdeveloped Countries. Boston: Beacon Press, 1969.

The Petroleum Publishing Company. International Petroleum Encyclopedia. Tulsa: The Petroleum Publishing Company, 1971-72.

The Petroleum Publsihing Company. Worldwide Directory Refining and Gas Processing. Tulsa: The Petroleum Publishing Company, 1971-72.

The Petroleum Publishing Company. USA Oil Industry Directory. Tulsa: The Petroleum Publishing Company, 1972.

The Petroleum Publishing Company. Petroleum Directory Eastern Hemisphere. Tulsa: The Petroleum Publishing Company, 1971-72.

The Petroleum Publishing Company. Petroleum Directory Latin America. Tulsa: The Petroleum Publsihing Company, 1971.

Veblen, Thorstein B. The Theory of Business Enterprise. New York: Charles Scribner's Sons, 1904.

Whitney, Simon N. Antitrust Policies. New York: Twentieth Century Fund, 1958.