THE UNIVERSITY OF OKLAHOMA
GRADUATE SCHOOL

INVESTIGATION OF GRID-PLATE MODULATION FOR RADIO-FREQUENCY AMPLIFIER

A THESIS
SUBMITTED TO THE GRADUATE FACULTY
in partial fulfillment of the requirements for the
degree of
MASTER OF ELECTRICAL ENGINEERING

BY
GERALD TUMA
Norman, Oklahoma
1941

INVESTIGATION OF GRID-PLATE MODULATION FOR RADIO-FREQUENCY AMPLIFIER

A THESIS

APPROVED FOR THE DEPARTMENT
ELECTRICAL ENGINEERING

BY

[redacted]

ACKNOWLEDGMENT

The author wishes to express his sincere thanks to Professor Clyde L. Farrar, who directed the work, for his helpful criticisms and suggestions.

TABLE OF CONTENTS

LIST OF ILLUSTRATIONS

INVESTIGATION OF GRID-PLATE MODULATION FOR RADIO-FREQUENCY AMPLIFIER

INTRODUCTION

Although amplitude modulation is not the only possible method used in radio transmitters for broadcasting, it has, by far, become the most dominant system used to-day. This system is now well developed and we cannot expect very much more to be gained, either, as to the degree of modulation or as to the minimum amount of distortion obtainable. The present day trend is toward increased efficiencies of radio-frequency amplifier operation and every effort is being made to reduce the first cost as well as the operating cost of transmitters.

There are two general methods of applying amplitude modulation to radio transmitters. The radio-frequency current of the final amplifier tube may be modulated, either, before or after the tube, resulting in what is called low- or high-level system of modulation, respectively. For the low-level system, modulation is applied to one of the earlier stages of power amplification and the output amplifier stage has only to reproduce faithfully the modulated wave.

This scheme has been the standard in designing high power transmitters but has the disadvantage of low average efficiency when designed to handle a completely modulated wave. High-level grid modulation, as it is sometimes called,[1] also falls in the low-level classification since it requires the amplifier tube to perform a linear operation resulting in a low average plate circuit efficiency. The advantage of this method is that it requires a negligible amount of modulating power.[2] For the high-level system, modulation is applied to the plate circuit of the amplifier. The linearity of the amplifier can be sufficiently high to meet requirements for high plate circuit efficiency but the chief disadvantage is that it requires large amounts of undistorted audio-frequency power for modulation, which is difficult to obtain. Since this power must be supplied by an amplifier, which, usually, has low efficiency, the overall efficiency is rather low. With the advance in the art of designing high power audio-frequency transformers,[3] the application of high power class B audio modulation permits the overall efficiency

---

[1] F. E. Terman, Radio Engineering, (2d ed.; New York: McGraw-Hill Book Co., 1937), p. 536.

[2] A. W. Kishpaugh and R. E. Coram, "Low Power Radio Transmitters for Radio Broadcasting," Proc. I. R. E., XXI (February, 1933), 212.

[3] J. A. Chambers, et al., "The WLW 500-Watt Broadcast Transmitter," Proc. I. R. E., XXII (October, 1934) 1151.

for unmodulated carrier operation to be high.

Control-grid system of modulation, having the advantage of requiring negligible modulating power, is counteracted by a low plate circuit efficiency, which result that, when the total equipment for each is installed, there is a very little difference in economy between control-grid and plate system of modulation. Methods of control-grid modulation,using either "grid-current" or the "grid-voltage" system,[4] are rather limited in broadcast service because of the difficulty in obtaining a completely modulated wave with tolerable values of audio distortion. In order to overcome or minimize these disadvantages several systems of high efficiency operation have been devised.[5, 6, 7, 8, 9,10]

---

[4] J. Loeb, "Modern Methods of Modulation," <u>Electronics</u>, (June, 1936), p. 40.

[5] Chambers, <u>et al</u>., <u>op. cit</u>., pp. 1151-1180.

[6] H. Chireix, "High Power Outphasing Modulation," <u>Proc. I. R. E.</u>, XXIII (November, 1936), pp. 1370-1392.

[7] W. H. Doherty, "A New High-Efficiency Power Amplifier for Modulated Waves," <u>Proc. I. R. E.</u>, XXIV (September, 1936), pp. 1163-1182.

[8] F. E. Terman and John R. Woodyard, "A High Efficiency Grid Modulated Amplifier," <u>Proc. I. R. E.</u>, XXVI (August, 1938), pp. 929-945.

[9] R. B. Dome, "High Efficiency Modulator System," <u>Proc. I. R. E.</u>, XXVI (August, 1938), pp. 963-982.

[10] A. W. Vance, "A High Efficiency Modulating System," <u>Proc. I. R. E.</u>, XXVII (August, 1939), pp. 506-511.

In other methods of obtaining increased plate circuit efficiency of radio-frequency amplifiers an attempt is made to vary the grid and plate voltage of the amplifier tube simultaneously in proportion to the average amplitude of a modulating tone. These variations are said not to take place instantly[11] and, accordingly, introduce distortion to a degree where it cannot be used for high quality transmission. Examples of these methods are controlled carrier modulation,[12] dynamic-shift linear amplifier,[13] and dynamic-shift grid modulated amplifier.[14]

A fourth system of grid-plate voltage modulation was introduced by Frank C. Jones[15] called Cathode Modulation, which offers a workable system without the disadvantage of varying the average carrier amplitude with modulation. The audio-frequency power is introduced into the cathode circuit of a radio-frequency amplifier tube and both the grid-bias and plate voltage are varied during modulation. The operating efficiency is a compromise between

---

[11] Terman, <u>op. cit.</u>, p. 537.

[12] <u>Ibid</u>., p. 537.

[13] J. N. A. Hawkins, "A New High Efficiency Linear Amplifier," <u>Radio</u>, No. 209 (May, 1936), p. 8.

[14] F. E. Terman and F. A. Everest, "Dynamic Shift Grid Bias Modulation," <u>Radio</u>, No. 211 (July, 1936), p. 22.

[15] F. C. Jones, "Cathode Modulation," <u>Radio</u> (October, 1939).

good efficiency but expensive modulator for high-level modulation and poor efficiency with inexpensive modulator for grid modulation. This method is, essentially, of an admixture of the two modulating systems and, hence, can have a portion of the advantages of each with the disadvantage of neither. With normal operation, about 75 per cent of the modulation is supplied by the grid bias method and the remaining 25 per cent by the plate voltage variation. This results in a carrier efficiency of about 50 per cent[16] and requiring relatively little audio power as compared to plate modulation systems, usually, about ten per cent of the d-c plate input to the modulated stage. An elementary circuit for cathode modulation is shown in Figure 1.

If an audio-frequency modulating voltage, e_m, is introduced into the cathode circuit of the radio-frequency amplifier by transformer T, it will modulate both the plate supply voltage and the grid bias voltage of the stage. With no modulation the cathode of the amplifier is, approximately, at ground potential since the IR drop is low in the secondary of transformer T, but, when modulation is applied, the cathode of the tube varies with respect to ground in accordance to the polarity of the modulating voltage. This, in turn, varies the effective grid bias and plate voltage on

---

[16] _The Radio Amateur's Handbook,_ (17th ed.; West Hartford, Conn.: American Radio Relay League, 1940).

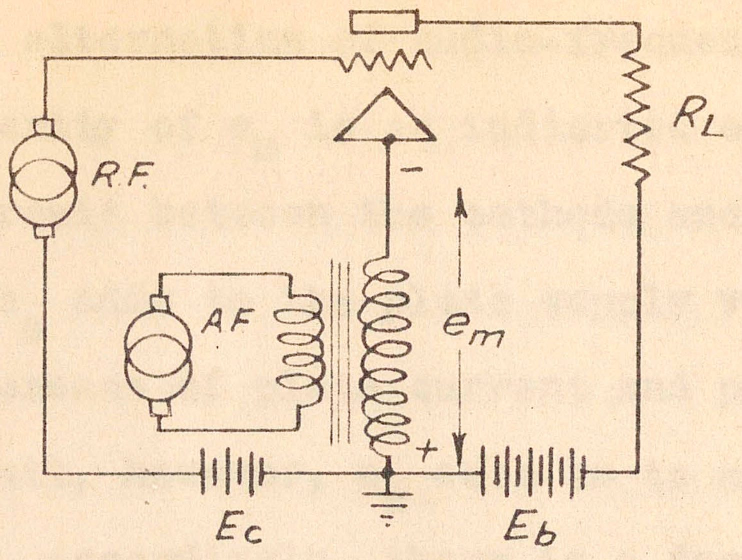

Fig. 1.– Elementary Circuit of Cathode Modulation.

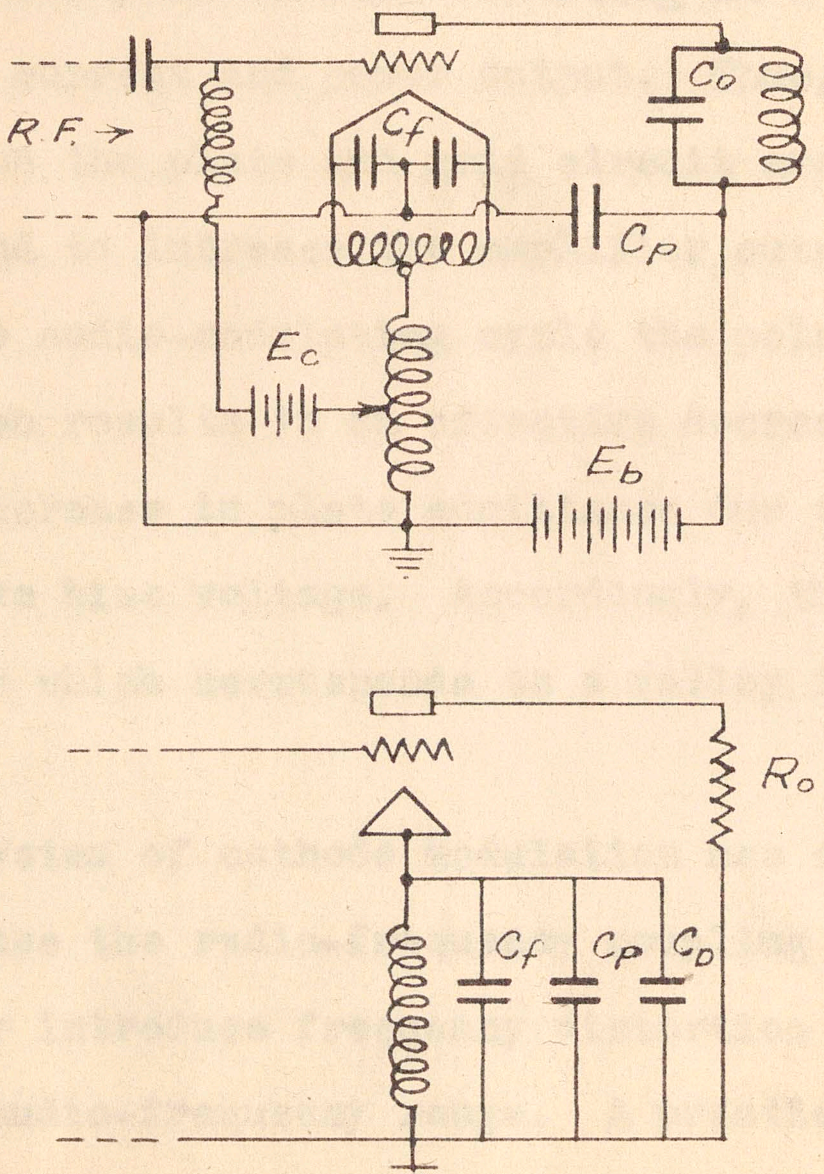

Fig. 2. — A Practical and Equivalent Circuit of Cathode Modulation

the tube resulting in a modulated output. Assuming that during the first alternation of audio-frequency modulating voltage, the polarity of e_m is as indicated on Figure 1. In the series circuit between the cathode and plate of the amplifier tube, e_m adds to the plate supply voltage E_b resulting in an increase of plate current and power output. In the grid circuit, however, e_m acts so to oppose the grid bias voltage and, accordingly, there is a decrease in effective grid voltage which brings about an increase in plate admittance of the amplifier tube resulting in a further increase of plate current and power output. Thus, the modulating voltage on the plate and grid circuit are in phase because both tend to increase the amplifier output. On the next half of the audio-modulating cycle the polarity of e_m is reversed which results in an effective decrease in plate voltage and a decrease in plate admittance due to the increased effective bias voltage. Accordingly, the amplifier output decreases which corresponds to a valley in the modulated carrier.

This system of cathode modulation has an important disadvantage since the radio-frequency coupling condensers in the amplifier introduce frequency distortion by attenuating the high audio-frequency range. A practical circuit of cathode modulation and its equivalent are shown in Figure 2. It may be observed that all the capacitances of the practical circuit shunt the audio modulation transformer causing the high audio-frequency range to be attenuated. Capacitance C_f of the equivalent circuit represents the two condensers of the practical circuit in parallel; C_p represents the plate circuit radio-frequency coupling condenser; C_d represents the distributed capacitance of the filament circuit of the amplifier including the capacitance to ground due to the filament transformer windings. The effects of attenuation may be observed in Figure 3. Curve A represents the frequency characteristics of the amplifier into an equivalent resistance load, that is, same as that which the cathode circuit presents to the modulation transformer. Curve B shows the rectified output of the radio-frequency amplifier and severe attenuation can be observed. Degenerative feedback could be used, but then the modulating amplifier will have to withstand larger peak voltages and, if not designed for this, distortion results as well as lower over-all efficiency of the radio-frequency and audio amplifier.

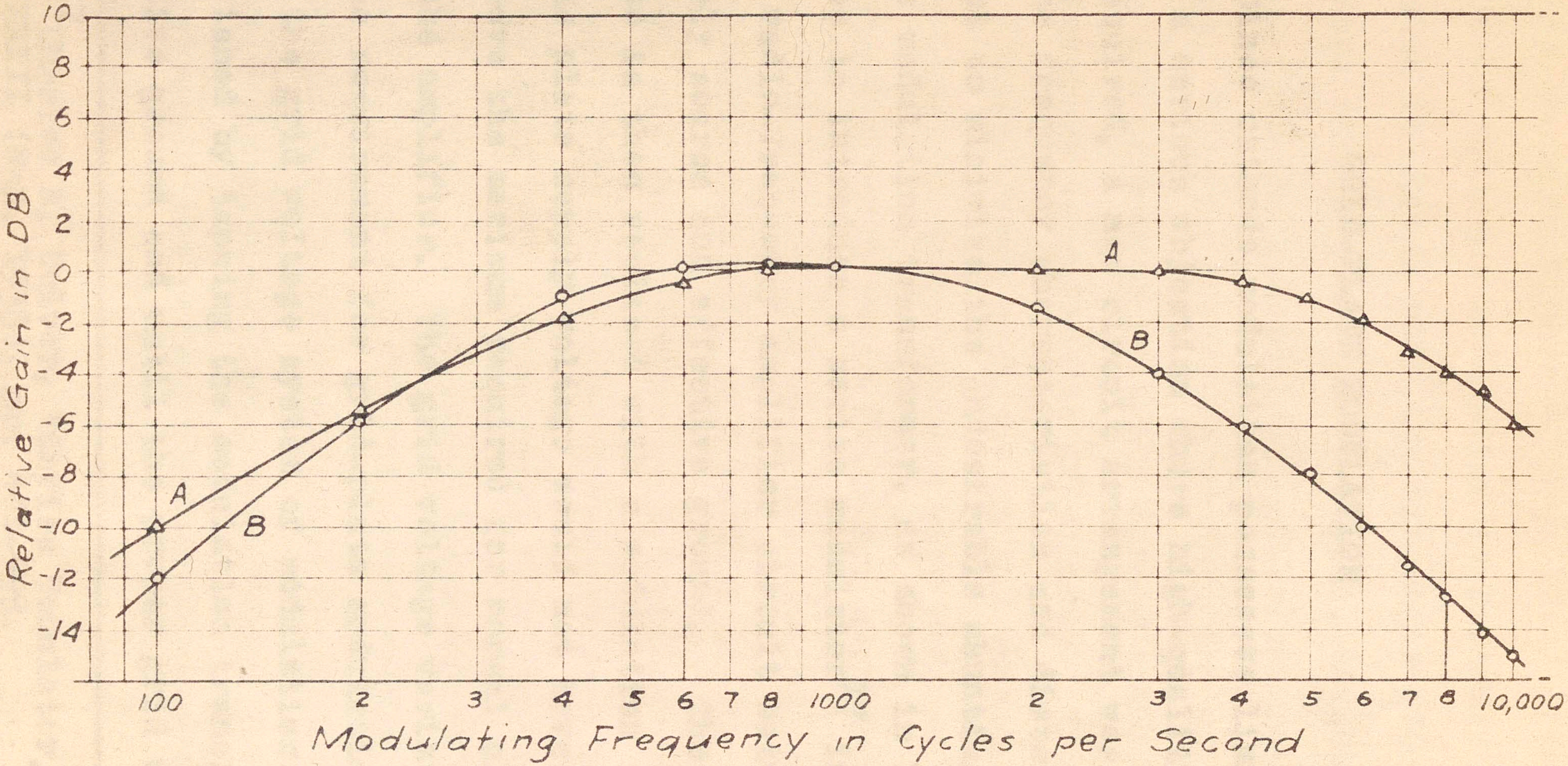

Curve A - Frequency Response for a Resistance Load.
Curve B - Frequency Response for a Cathode Circuit Load.

Fig. 3- Frequency Response Characteristics of Cathode Modulation.

GRID-PLATE MODULATION

Since cathode modulation possesses limitations which are a serious objection where high-quality transmission is required, a new circuit arrangement was sought to improve the frequency characteristics and distortion. The arrangement to minimize the undesirable shunting capacitance across the modulation transformer, as shown in Figure 3, page 9, was to introduce a series modulator[17] into a conventional radio-frequency amplifier circuit between the plate supply source and effective ground. The series modulator tube is then replaced with a modulation transformer so that the plate supply voltage would not have to be increased above the maximum required for normal class C operation of the amplifier. The grid voltage variations to fulfill the requirement for grid-plate modulation are obtained by the grid voltage system of modulation.[18] This is accomplished by tapping the modulation transformer from the effective ground end until the proper grid voltage

---

[17] Charles A. Culver, "Series Modulator," Proc. I. R. E., XXIII (May, 1935), pp. 481-495.

[18] Loeb, op. cit., p. 40.

variations are obtained. An elementary circuit of this arrangement is shown in Figure 4, page 12. From this circuit it may be seen that the modulation transformer is shifted to a position in series with the effective ground and negative terminal of the plate power supply, deviating only as to position from the conventional plate voltage modulation arrangement. This is necessary so that the grid voltage variations are of proper polarity during modulation for the required in-phase operation to take place. This arrangement still has disadvantages even though the shunting capacitances across the modulation transformer were reduced to only the grid and plate circuit radio-frequency coupling condensers, C_1 and C_2. The grid capacitance C_1, however, is neglectable since it is connected only to a portion of the modulation transformer, and the effective grid coupling capacitance is of low value. With modulation it may be seen that the plate power supply must vary in potential with respect to ground. This is not serious for low power transmitters[19] but for transmitters of large outputs the power supply equipment increases in bulk and, accordingly, the capacitance to ground becomes again a serious factor, even though this new arrangement has decreased the effective shunting capacitance of the filament circuit.

---

[19] "Low power transmitters being those of 100 watts or less."

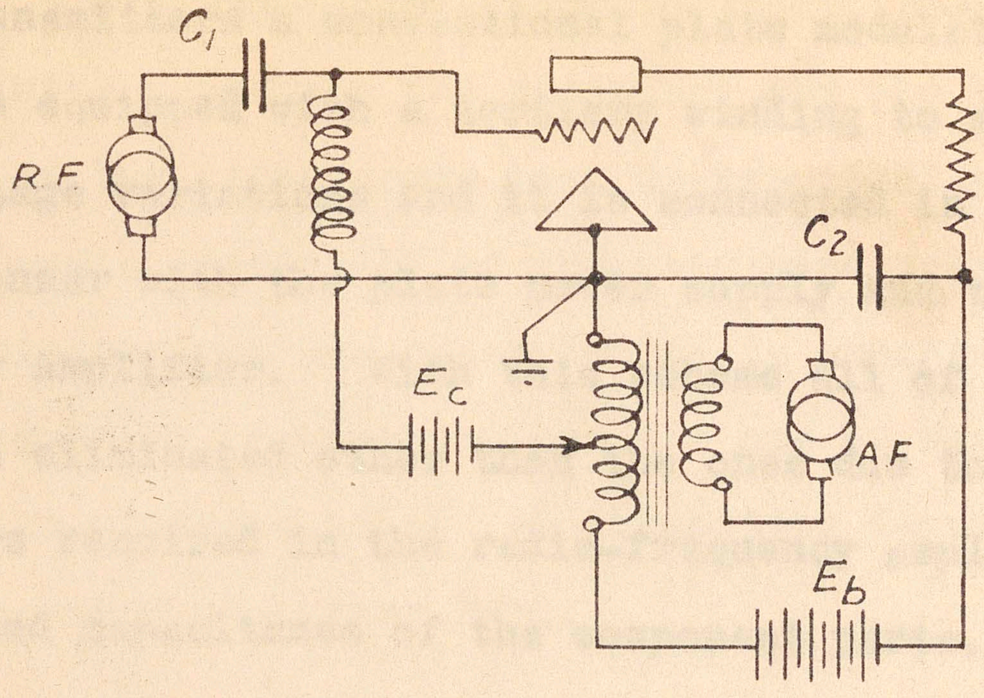

Fig. 4.- Elementary Circuit of Grid-Plate Modulation

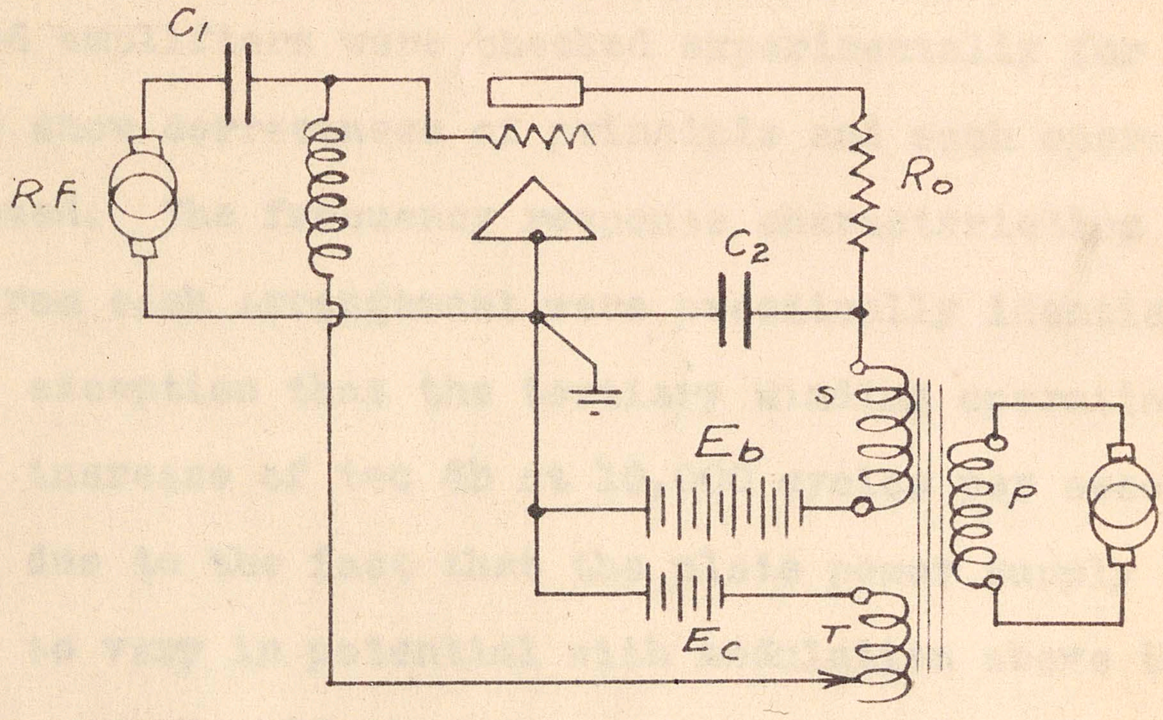

Fig. 5 - Elementary Modified Circuit of Grid-Plate Modulation.

To correct these objections in the higher power transmitters a conventional plate modulation transformer is equipped with a tertiary winding to supply the grid voltage variations and it is connected in the conventional manner with the plate power supply and the radio-frequency amplifier. With this scheme all of the objections are eliminated other than the ones due to coupling condensers required in the radio-frequency amplifier and distributed capacitance of the component parts. These are found in most present day transmitters and are not a serious objection. An elementary circuit of this method is shown in Figure 5.

These two outlined methods of improved grid-plate modulated amplifiers were checked experimentally for operation to show correctness of principle and each operated as expected. The frequency response characterictics obtained from each arrangement were practically identical with the exception that the tertiary winding operation gave a slight increase of two db at 10,000 cycles per second. This was due to the fact that the plate power supply did not have to vary in potential with modulation above the effective ground. If the equipment had been of larger construction, considerable attenuation would probably be experienced at the high-audio frequency end. In a practical application the only consideration that must be given to the grid-plate modulated radio-frequency amplifier using the tertiary winding is that the modulation transformer must have a minimum amount of phase shift, that is, the phase relations between the secondary and the tertiary windings of the transformer must be practically zero to keep the audio distortion of the modulated output to a minimum. This transformer construction is expensive but is also a necessary requirement for the use of degenerative feedback to minimize noise and distortion developed by the radio-frequency amplifier tube.

EXPERIMENTAL TRANSMITTER

The experimental transmitter, that was constructed to check the principles of grid-plate system of modulation, consisted of a conventional radio-frequency power amplifier using a type 10 tube. The modulated stage was excited by a type 53 tube operating as a class C amplifier and its frequency was controlled by a type 2A5 tube as a crystal oscillator operating on a frequency of 1010 kilocycles. The modulation arrangement was as shown in Figure 4. This was not the one desired, but had to be used since a good grade modulation transformer with a tertiary winding was not available. The tertiary winding method of obtaining grid variations was checked by using a transformer with a large leakage reactance which proved the principle of operation, but the phase shift experienced was too great for application of degenerative feedback which is necessary to bring the developed distortion of the modulated stage to a reasonable value for comparison with other systems of increased efficiency operation. The best available modulation transformer was a Kenyon Type T494[20] suitable for

---

[20] Kenyon Transformer Co., Inc., New York.

universal operation and rated at 75 watts.

This transformer, designed for amateur radio service, has an audio-frequency range of about 300 to 5000 cycles per second. This, of course, is not suitable for the effective present day broadcast ranges of 30 to 10,000 cycles per second obtainable by the greatest majority of broadcast transmitters. It was desired that this range be investigated. The schematic diagram of the constructed experimental transmitter as shown in Figure 6 includes the modulated amplifier and the tank circuit of driving stage, including the modulation transformer. The modulation transformer T_1 has connected to its secondary terminals, 1 and 2, which consist of one-half the transformer turns, a 5000 ohm potentiometer such that any desired amount of grid modulating voltage may be obtained. This grid modulating voltage is obtained with respect to the effective ground and is equal to e_m as shown on the diagram. For the plate circuit modulation the negative terminal of the 600 volt power supply is connected to the taps on the transformer secondary, such that proper modulating voltage E_m is obtained for the required percentage of plate modulation. The resistor R_3 is connected to the extreme secondary terminal, labeled 4, and to the negative power supply lead. This resistor is non-inductive and adjustable. For different values of modulating power requirements the loading can be adjusted

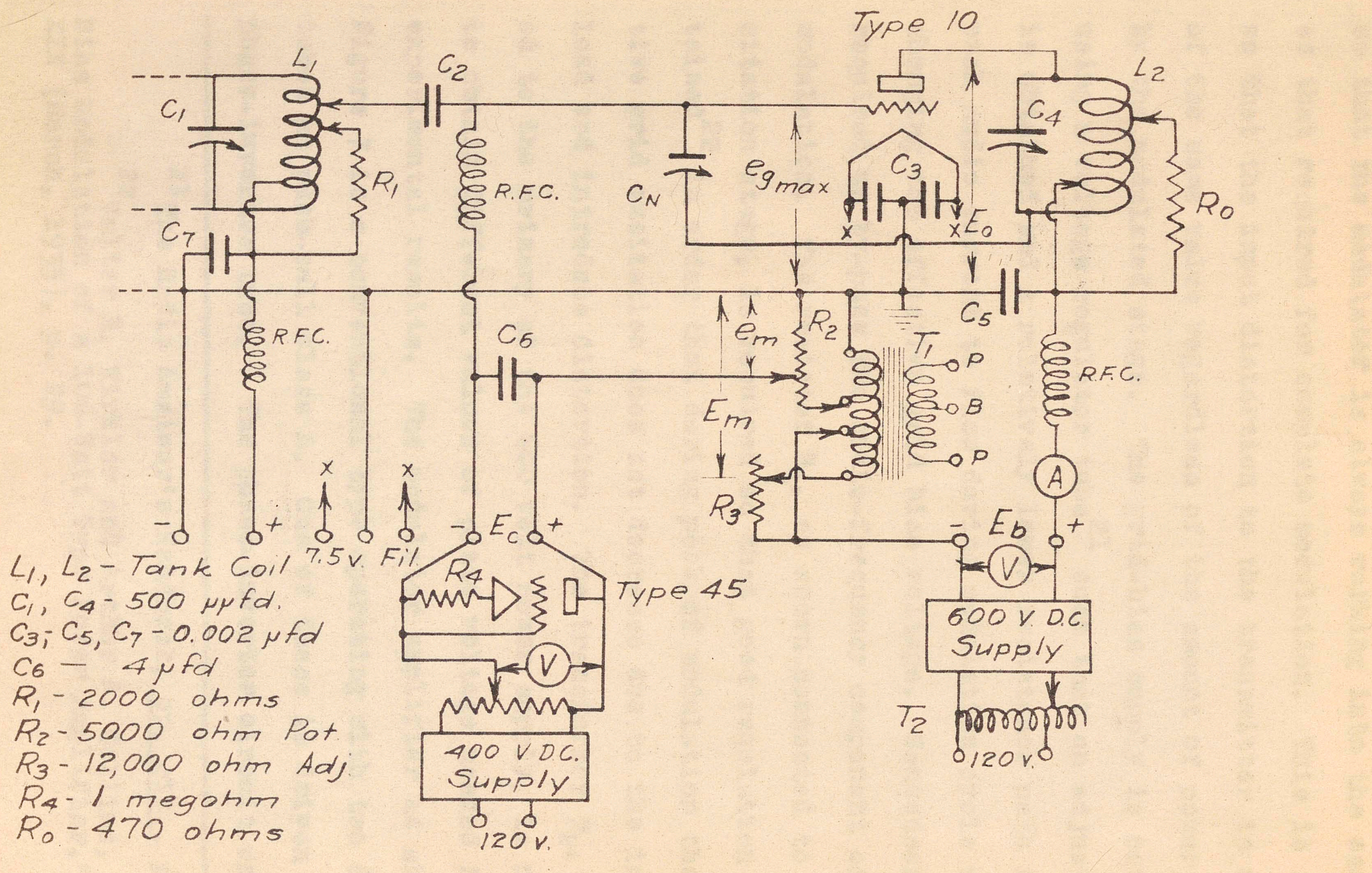

FIG. 6 - Schematic Diagram of Experimental Transmitter

so that the modulator is always working into the same load as that required for complete modulation. This is required so that the input distortion to the transmitter is always of the same value regardless of the amount of power required by the modulated stage. The grid-bias supply is constructed, using a voltage regulator tube[21] such that an adjustable bias is obtained and a relatively lower resistance path for the peak audio current to flow during modulation cycle without changing the effective grid bias voltage. Condenser C_6 is required to by-pass the audio-frequency component of grid modulation. The resistor R_1, as shown connected to the excitation stage, is required so that good regulation is obtained[22] in order that during peak of modulation the effective grid excitation does not decrease due to the increased load and introduce distortion. The transformer T_2, connected to the primary of the 600 volt power supply, is necessary to obtain different values of plate voltage needed for the experimental results. The modulator amplifier as shown in Figure 7 is a conventional type operating with two 6L6 power tubes as push-pull class A. One of these is driven by a phase-inverter tube. The phase-inverter circuit was chosen

---

[21] The Radio Amateur's Handbook, op. cit., p. 189.

[22] Walter H. Wirkler and Arthur A. Collins, "Grid-Bias Modulation of a 100-Watt Type Power Amplifier," QST, XIX (March, 1935), p. 29.

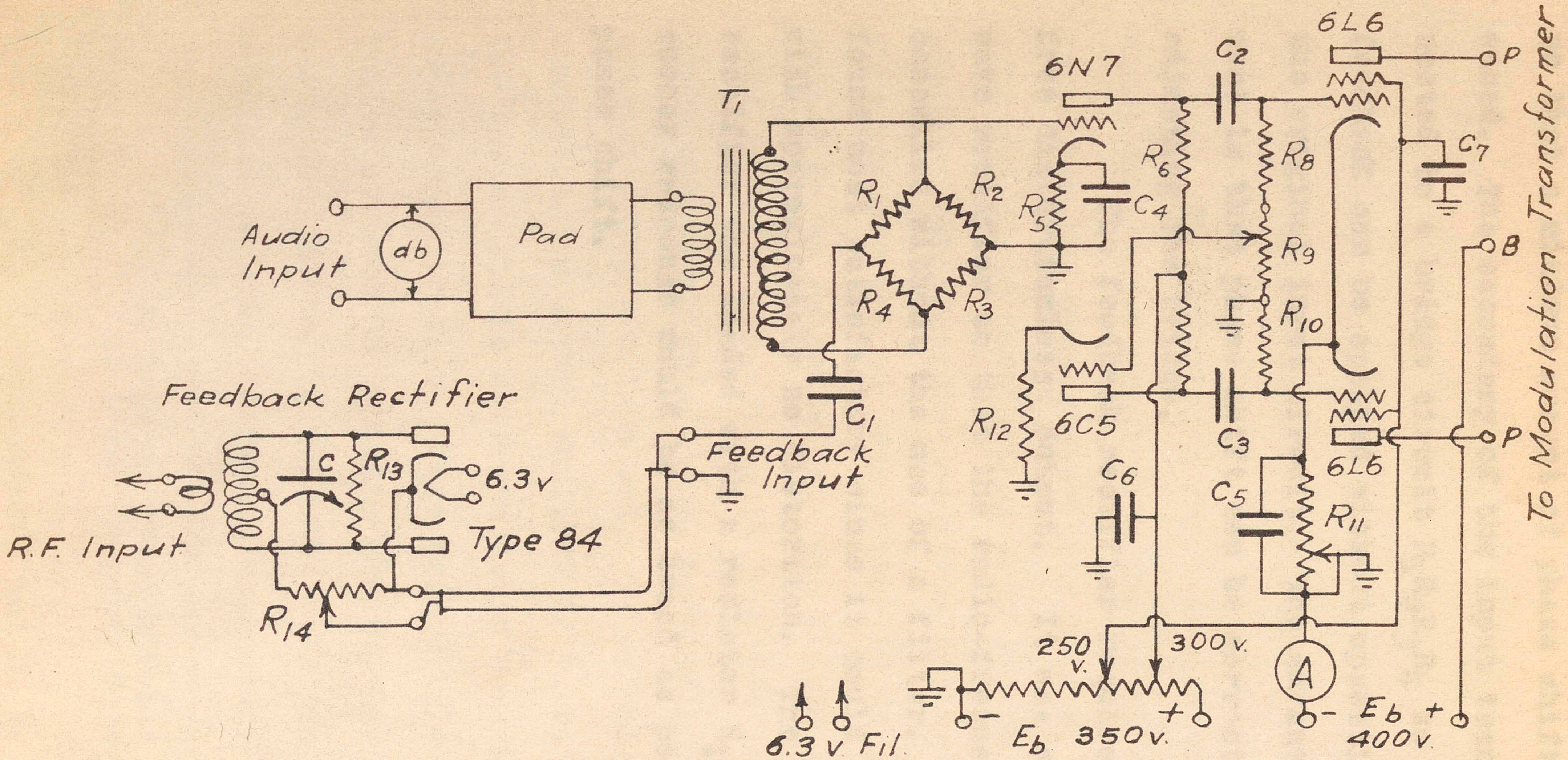

C_1 - 0.5 μfd
C_2, C_3 - 0.1 μfd.
C_4, C_5 - 25 μfd.
C_6, C_7 - 8 μfd
C - 350 μμfd

R_1, R_2, R_3, R_4 - 500M ohms
R_5 - 5000 ohms
R_6, R_7 - 100M ohms
R_8 - 200M ohms
R_9 - 50M ohms var.

R_{10} - 250 ohms var.
R_{11} - 200 ohms
R_{12} - 10M ohms
R_{13} - 20M ohms
R_{14} - 20M ohms var.

Fig. 7 — Schematic Diagram of Modulator Amplifier

so that a minimum amount of phase shift would be experienced. The secondary of the input transformer T_1 is connected to a bridge circuit $R_1R_2R_3R_4$ so that degenerative feedback can be applied without upsetting the conditions of the original input circuit. The advantage of this arrangement is that phase shift can be corrected to some degree by adjusting the bridge.

The feedback rectifier requirement is for a hum-free distortionless output. It was constructed as a full-wave rectifier so that the radio-frequency component is cancelled without the use of a filter. A type 84 tube was found most satisfactory since it could handle large voltage with approximately no distortion. The tuned circuit of the rectifier was loaded with a resistor R_{15} so that its frequency response would be as broad as possible to minimize phase shift.

DETERMINATION OF OPERATING CONDITIONS

In designing a radio-frequency amplifier for grid-plate systems of modulation the problem to be solved is in obtaining the proper operating points. Since we apply both grid and plate modulation, each system is investigated for the most satisfactory condition during complete modulation. This process can be done either by an actual cut-and-try method or by calculation. The latter method is usually the most satisfactory, since it requires less time to obtain optimum operating conditions, particularly, when large transmitting tubes are involved. To calculate exact points of operation the method outlined by D. C. Prince[23] requires the use of static characteristic curves of the vacuum tube under consideration. This method takes considerable time before correct assumptions are made to give the best operating conditions. A somewhat more simplified method was outlined by Mouromtseff and Kozanowski[24] by using constant

---

[23] D. C. Prince, "Vacuum Tubes as Power Oscillators," Proc. I. R. E., XI (June, August, October, 1923), pp. 275, 405, 527.

[24] I. E. Mouromtseff and H. N. Kozanowsli, "Analysis of the Operation of Vacuum Tubes as Class C Amplifiers," Proc. I. R. E., XXIII (July, 1935), pp. 752-778.

current characteristic curves for the tube under consideration, but unfortunately, the amount of labor involved requires also too much time and constant current waves usually are not available. A simplified method was, then, sought for computing the performance of tube operation with reasonable accuracy and in minimum amount of time so that points during a modulating cycle could be investigated.

The method outlined by W. G. Wagener,[25] the latest published, is similar to those outlined by F. E. Terman and J. H. Fern,[26] and by F. E. Terman and W. C. Roake.[27] In general, all three methods are based upon the assumption that the total space current of the tube can be expressed by the following mathematical relation

$$\text{Total space current} = (I_p + I_g) = g_m \left(e_{g_{max}} + \frac{e_p}{\mu}\right)^x \qquad (1)$$

where x is an exponent fairly close to 1.0 for most types of transmitting tubes depending upon the geometrical construction of the tube, the 3/2 power being the ideal.

---

[25] W. G. Wagener, "Simplified Methods of Computing Performance of Transmitting Tubes," Proc. I. R. E., XXV (January, 1937), p. 47.

[26] F. E. Terman and J. H. Ferns, "The Calculation of Class C Amplifier and Harmonic Generator Performance of Screen-Grid and Similar Tubes," Proc. I. R. E., XXII (March, 1934), pp. 359-373.

[27] F. E. Terman and W. C. Roake, "Calculation and Design of Class C Amplifiers," Proc. I. R. E., XXIV (April, 1936), pp. 620-632.

Wagener[28] made several analyses of actual plate current pulses that were typical in amplifier operation. He showed that although the exponent did not remain constant it may be treated as unity in establishing ratios of peak values of plate current pulse to the direct current value and the ratio of fundamental alternating current component to the maximum plate current component as a function of the angle of flow.

Thus, for the analysis of the plate current pulse it is quite reasonable to treat the exponent as unity for the peak value of current. Then, upon the assumption that space current is in the form given by equation (1), a curve can be plotted which gives the relationship between direct current I_{dc} and fundamental frequency component I_p of the total space current in terms of maximum space current I_m and the number of electrical degrees for current cut-off to take place. Such a curve is shown by Figure 8 and its derivation in Appendix I which, also, includes equations for obtaining curves for exponents other than unity. From the two curves it is then possible to determine the direct current and fundamental alternating component of the space current pulse without the necessity of using the point-to-point method of calculations. The key to the solution of any operating

---

[28] Wagener, <u>op. cit.</u>, p. 53.

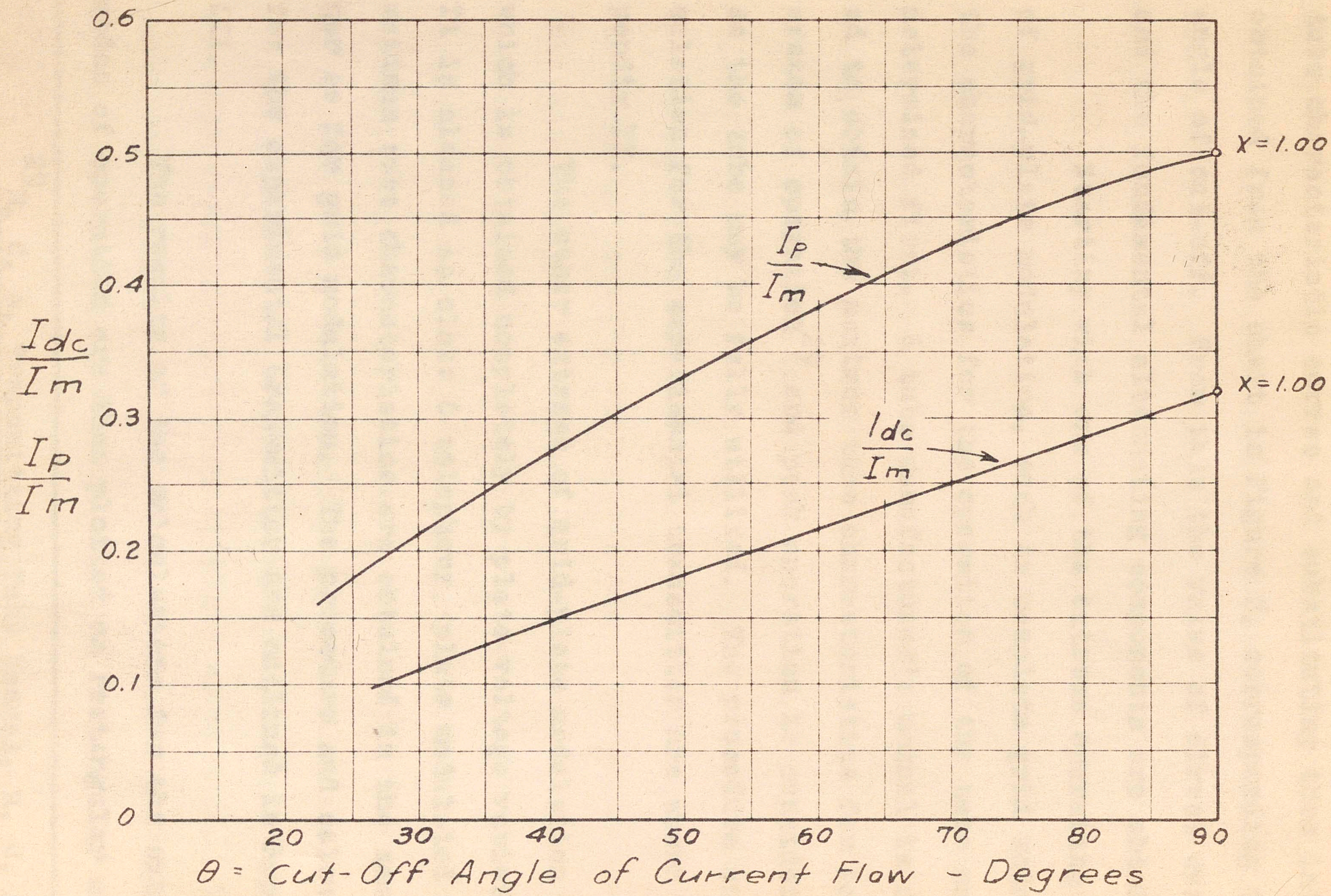

Fig. 8.- Direct-Current and Fundamental Frequency Components of Space Current Impulses as a function of Cut-Off Angle.

problem is, then, to locate the maximum current from the tube characteristic curves and substituting them into ratios obtained from the chart in Figure 8, corresponding to the angle of cut-off. From this the value of direct current and the fundamental alternating components are obtained.

Starting with one of the extreme operating points of grid-plate modulation, such as complete grid modulation, the characteristics for the operation of the tube must be determined first. A tube manufacturer's manual is consulted to obtain the maximum tube characteristics for low-level system of operation[29] and peak operation is considered first so the tube may be fully utilized. The procedure and calculation for the experimental transmitter are shown in Appendix II.

The other extreme of grid-plate modulation is that which is obtained completely by plate voltage variations. It is classed as class C telephony, plate modulated and the maximum tube characteristics are obtained in the same manner as for grid modulation. The procedure and calculation for the experimental transmitter are outlined in Appendix III.

The results of the calculations for the extreme modes of operation are then plotted on rectangular coor-

---

[29] R. C. A. Transmitting Tube Manual, R. C. A. Manufacturing Co., Inc. (1938).

dinate paper with the left ordinate representing the operating voltages for complete grid modulation and the right ordinate representing complete plate modulation as shown in Figure 9. The corresponding points of each method of modulation are then joined by a straight line, since the percentage of plate modulation varies as a linear function. The abscissa between the two modes of operation is represented in percentage of plate modulation. These curves represent only carrier conditions to which the experimental transmitter must be adjusted without modulation. The curves resulting from calculation are the plate supply voltage E_b, radio-frequency plate voltage E_o, grid-bias voltage E_c, and the maximum instantaneous positive grid voltage $e_{g\,max}$ The plate current for all conditions of operation was held constant at 45 milliamperes. Included are also two curves indicating the necessary modulating potentials for complete modulation. Since the percentage of modulation is a linear function, the grid variations e_m were calculated as a straight line, being zero, when complete plate modulation was taking place. Similarly, the plate modulation voltage curve is shown in terms of percentage of plate modulation. This curve was obtained by the product of the percentage of modulation and the plate voltage required for the mode of operation.

From these curves in Figure 9 the experimental

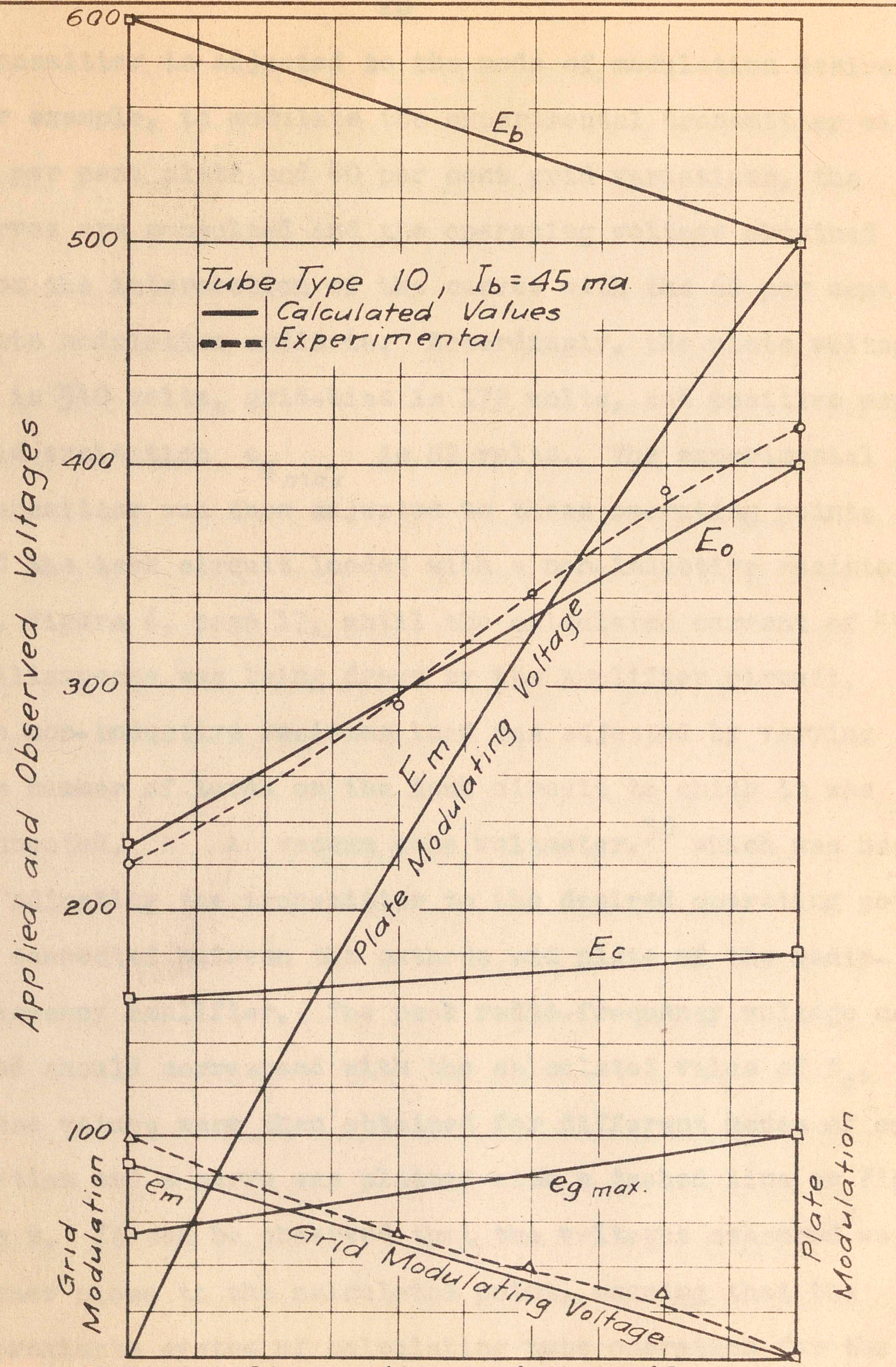

Fig. 9. – Voltage Relations for Grid-Plate Method of Modulation

transmitter is adjusted to the mode of modulation desired. For example, to modulate the experimental transmitter with 60 per cent plate and 40 per cent grid variations, the curves are consulted and the operating voltage obtained from the intersection of the curves with the 60 per cent plate modulation ordinate. Accordingly, the plate voltage E_b is 540 volts, grid-bias is 172 volts, and positive peak grid excitation $e_{g_{max}}$ is 82 volts. The experimental transmitter was then adjusted to these operating points and the tank circuit loaded with a non-inductive resistor R_o, Figure 6, page 17, until the calculated current of 45 milliamperes was being drawn by the amplifier circuit. The non-inductive resistor load was adjusted by varying the number of turns on the tank circuit to which it was connected. A vacuum tube voltmeter,[30] which was used in adjusting the transmitter to the desired operating points, is connected between the cathode and plate of the radio-frequency amplifier. The peak radio-frequency voltage measured should correspond with the calculated value of E_o. These values were then obtained for different modes of operation and a curve was plotted with a dashed line on Figure 9. It can be observed that the voltages measured were rather close to the calculated point, meaning that the approximate system of calculating tube operation for the

---

[30] Appendix IV.

experimental transmitter was acceptable.

The power relations corresponding with the voltage curves of Figure 9 are shown in Figure 10. The calculated lines are solid and the experimental are shown as dashed. The experimental power output curve was obtained by measuring the radio-frequency voltage and converting it into power by squaring the effective value measured and dividing by the resistance of the non-inductive resistor load. The power out-put for plate modulation, which corresponded to the radio-frequency voltage observed for the same operation, was greater than calculated. The losses in the tank circuit were probably not in excess of one-half watt since the arrangement was designed to have a low value of reactive power to real power. The efficiency curve followed the power output curve in shape since the power input was the same for both the calculated and experimental values.

The power required to modulate the transmitter is shown in Figure 10. It begins at, approximately, one-half watt for complete grid modulation since the modulating source must furnish a part of the grid-excitation losses of the radio-frequency modulated amplifier and does not have to produce power for the necessary side bands.[31]

For complete plate modulation the audio-frequency

---

[31] Kishpaugh and Coram, <u>op. cit</u>., p. 212.

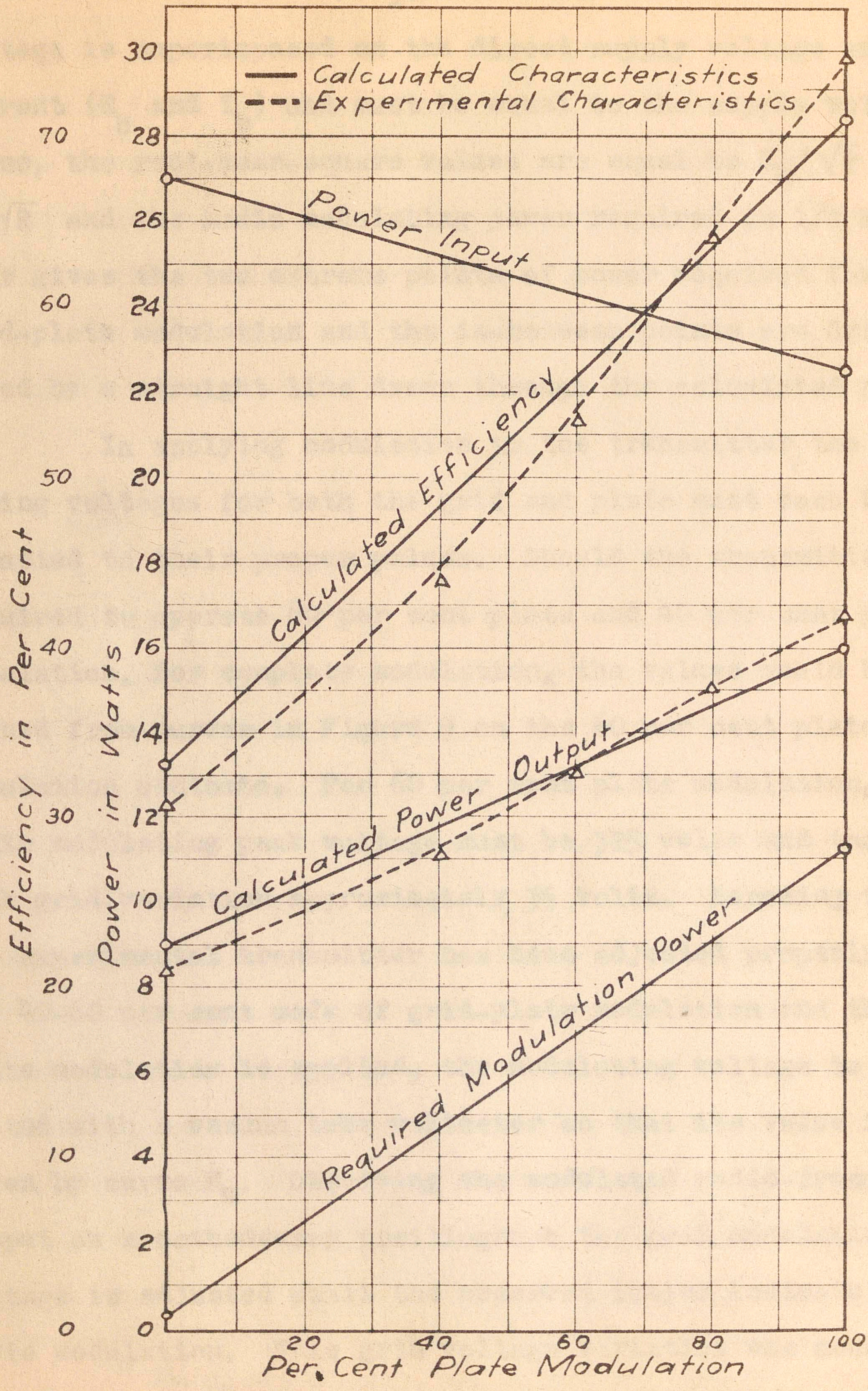

Fig. 10.— Power Relations for Grid-Plate Method of Modulation

voltage is superimposed on the direct supply voltage and current (E_b and I_b) and must be equal to the supply voltage. Hence, the root-mean-square values are equal to $E_b/\sqrt{2}$ and $I_b/\sqrt{2}$ and the audio modulating power required is $1/2\ E_bI_b$. This gives the two extreme points of power required for grid-plate modulation and the in-between points are determined by a straight line drawn through the calculated points.

In applying modulation to the transmitter, the modulating voltages for both the grid and plate must each be adjusted to their proper values. Should the transmitter be required to operate 60 per cent plate and 40 per cent grid modulation, for complete modulation, the values would be obtained from curves in Figure 9 on the 60 per cent plate modulation ordinate. For 60 per cent plate modulation, the audio modulating peak voltage must be 325 volts and the peak grid variation, approximately, 35 volts. Assuming that the experimental transmitter has been adjusted properly for the 40-60 per cent mode of grid-plate modulation and then plate modulation is applied, the modulating voltage is adjusted with a vacuum tube voltmeter so that its value is given by curve E_m. Observing the modulated radio-frequency output on a cathode-ray oscillograph the grid modulating voltage is adjusted until the observed images indicate complete modulation. This grid voltage variation was measured by the vacuum tube voltmeter and the resulting value plotted on Figure 9. They correspond very closely but a greater value was required than calculated. This was brought about by the fact that the regulation of the driving stage was not perfect and it required considerable more audio voltage to drive the amplifier for complete modulation.

To determine the power input to a modulated stage and modulator for high-level systems of modulation

$$P_t = P_c\left(1 + \frac{m^2}{2\eta_m}\right) \tag{2}$$

where P_t is the total power input, P_c the power input for an unmodulated carrier, η_m the plate efficiency of the modulator amplifier, and m the degree of modulation.

For a class A modulator the plate circuit efficiency is proportional to the square of the modulating voltage, that is, η_m is proportional to m^2, and accordingly, the power input is constant and independent of modulation. Value of efficiency for the modulator is about 30 per cent for 100 per cent modulation with tolerable values of distortion. Considering a class B modulator the practical value of η_m is substituted in equation (2) for determining total power input with class B modulators.

The theoretical maximum values,[32, 33] of η_m for class B equal to $\pi/4$ or 0.785 per cent. If, then, the

---

[32] Chambers, *et al.*, *op. cit.*, p. 1151.

[33] I. E. Mouromtseff and H. N. Kazanowski, "Comparative Analysis of Water Cooled Tubes as Class B Audio Amplifiers," *Proc. I. R. E.*, XXIII(October, 1935), pp. 1224-1251.

modulator plate voltage is assumed equal to the radio-frequency power amplifier direct plate voltage and the modulators are considered as operating at true cut-off with no modulation, the theoretical assumption for η_m would be proportional to m and, accordingly, the power input would use from P_c to a maximum value in a linear relation to m. For practice these assumptions do not hold since the plate current of the modulator is usually held about 20 per cent of the maximum value for complete modulation and the maximum value of η_m is about 65 per cent. Assuming that the modulator input rises linearly with modulation from 0.20 to the maximum value given by $\eta_m = 0.65$ the power input is,

$$P_t = P_c\left(1 + \frac{0.2 + 0.7m}{0.65}\right) \qquad (3)$$

From this it is possible to calculate the total power input required for any mode of operation and degree of modulation.

EXPERIMENTAL RESULTS

With the different modes of grid-plate modulation characteristics for radio-frequency amplifier calculated, the next step was to determine the characteristics of modulation, such as, frequency distortion, amplitude distortion, phase shift, and the effects of degenerative feedback for their connection. The experimental work included only five modes of grid-plate modulation for investigation and comparison. Although the experimental transmitter had its limitation, due to poor quality of the modulation transformer, reasonably good results were obtained. The five modes of grid-plate modulation are the two extremes of complete grid, complete plate, 20 per cent grid - 80 per cent plate, 40 per cent grid - 60 per cent plate, and 60 per cent grid - 40 per cent plate.

The frequency distortion curves obtained from the experimental transmitter are shown in Figure 11. These do not comply with the present day standards of good engineering practices as followed by the radio broadcasting industry, but are sufficiently good to demonstrate the limitations of cathode modulation and the improvement of degenerative feedback on the characteristics obtained with the five modes of grid-plate modulation. The method of obtaining this experimental data was the connecting of a General Radio Type 626-A vacuum-tube voltmeter to the output of a full-wave rectifier. The rectifier circuit consisted of a center tapped tuned circuit coupled by a low impedance transmission line to the transmitters output. The outside connections of the tuned circuit were then connected to the plates of a type 84 tube with an output load resistor connected between the center tap of the tuned circuit and cathode of the tube. This is similar to the feedback rectifier circuit as shown in Figure 7, page 19. With the vacuum tube voltmeter connected to the load resistor it measured only the root-mean-square values of the detected output, being zero for no modulation and varying proportionally to the amplitude of modulation. A sine-wave tone was obtained from a R. C. A. 69-A beat-frequency oscillator connected to a db meter for obtaining an input reference level and an attenuation box for reducing the audio-frequency output of the oscillator to a value required at the modulator amplifier input to produce complete plate modulation of the radio-frequency amplifier.The audio-frequency reference point was chosen as 1000 cycles per second. Holding the audio-input to the modulating amplifier constant and varying the modulating frequency over the

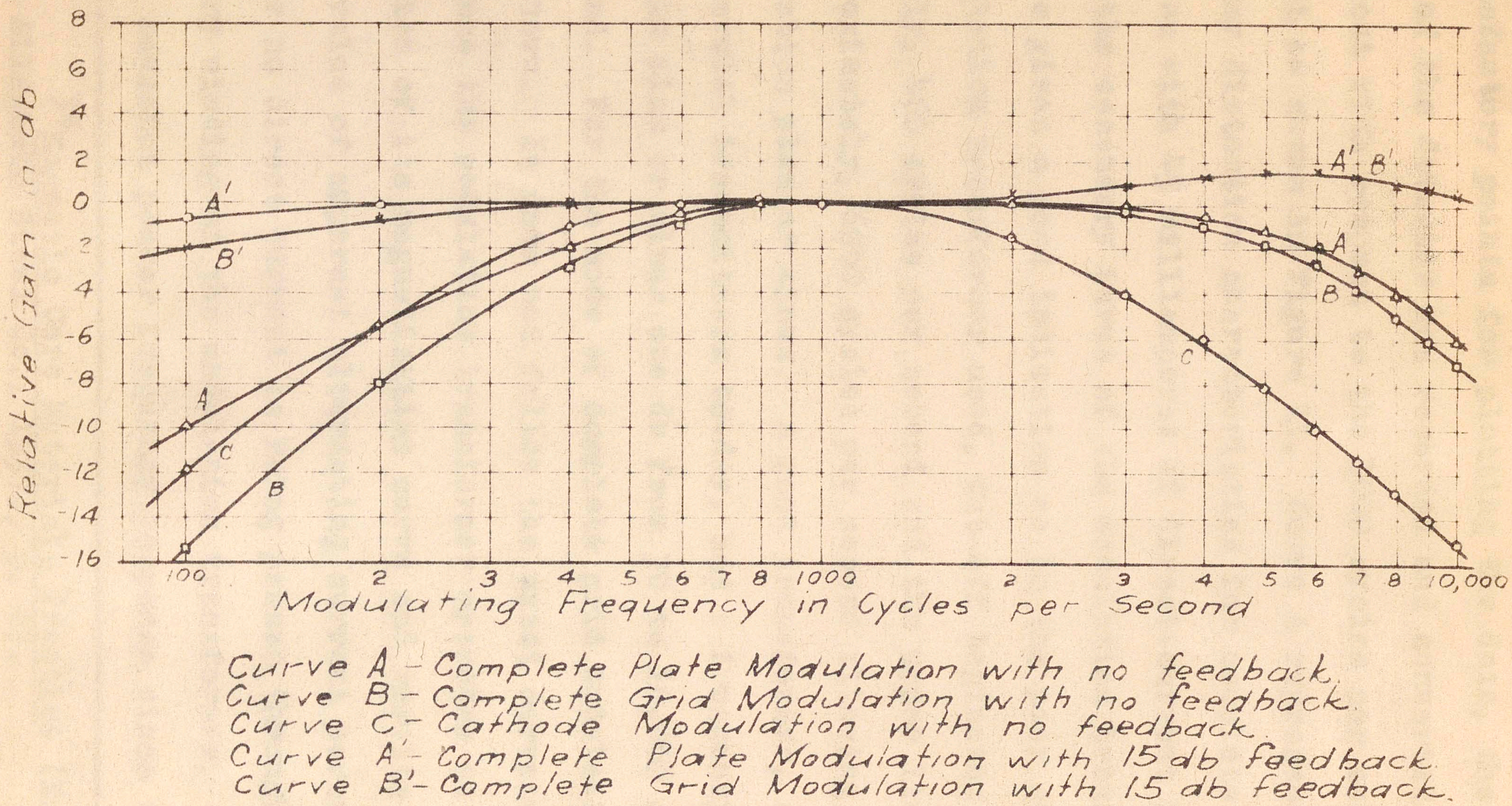

Fig. 11 - Frequency Response Characteristics of Grid - Plate Modulation

usable range of experimental transmitter in steps to give satisfactory points for plotting the data, the voltage output of the detector was recorded and converted to db gained or lost with respect to the 1000 cycles per second reference point as shown in Figure 11. Curve A represents the frequency distortion characteristics for complete plate modulation with 45 milliamperes of direct-current flowing in all the secondary turns of the modulation transformer. This curve gives a good indication as to the poor quality of the modulation transformer used, cut-off beginning at, approximately, 400 cycles per second and the upper limit being, approximately, 6000 cycles per second allowing a one db variation plus or minus. A good transformer, as used in commercial transmitters to-day, has a frequency response within plus or minus one db from 30 to 10,000 cycles per second. For the mode of complete grid modulation, curve B is shown. It does not follow the exact curvature of curve A since the modulation transformer operates on a different portion of its magnetization curve and results in a different value of apparent alternating current permeability[34] since no direct current is being passed through the secondary winding of the modulation transformer. This results in a somewhat poorer frequency response since the trans-

---

[34] *Magnetic Core Materials Practice* (Brackenridge, Pa.: Allegheny Steel Co., 1937), p. 67.

former was designed for large values of direct current as used in amateur radio operation. For the different modes of grid-plate variations, the frequency response curves were between the limiting curves A and B but were not plotted so as not to congest the figure with too many curves of nearly the same shape. The plate current supplied to the transmitter was maintained constant at 45 milliamperes for all modes of operation, but the reason for the variations is that the effective ampere turns were different for each mode of operation since each operation had to be supplied with a different value of plate modulating voltage, as shown in Figure 9, page 27. Curve C is included for cathode modulation to show the improvement that can be expected with the grid-plate method of modulation. Curves A' and B' are the resultant frequency response characteristics of curves A and B, respectively, when 15 db of degenerative feedback from the rectified radio-frequency source is superimposed on the input circuit of the modulator amplifier.

For audio-frequency distortion characteristics an R. C. A. type 69-A distortion meter was used in conjunction with the beat-frequency oscillator. The arrangement is the same as for frequency characteristics with the exception that a sample of the radio-frequency output is supplied to the distortion meter. Also a cathode-ray oscilloscope is necessary to adjust the transmitter to complete modulation by observing the modulated wave.

The resulting audio-frequency distortion curves without degenerative feedback for the five modes of grid-plate modulation are shown in Figure 12. Each of these curves were obtained for 100 per cent audio modulation. The curve E represents the distortion obtained for 100 per cent plate modulation and has the lowest distortion of the other four modes when the modulator is supplying the maximum amount of audio power to modulate the radio-frequency amplifier. But when the run was made for the next mode of operation, 20 per cent grid - 80 per cent plate, curve D, the demand for audio-frequency power from the modulator has decreased to 80 per cent of that required for 100 per cent plate modulation, assuming that the power input remains the same. This, in turn, will decrease the distortion produced in the modulator amplifier and, accordingly, the curves of Figure 12 would not be suitable for comparison, since in each mode of operation they would have a different value input distortion and no suitable reference point on which to base experimental results. The arrangement used in the experimental transmitter is shown in Figure 6, page 17. With a vacuum tube voltmeter the audio modulation voltage at 1000 cycles per second reference is measured for 100 per cent plate modulation and its value recorded. Then, for the next mode of operation, considering 20 per cent grid - 80 per cent plate variations, the modulation transformer was tapped to give the proper modulating voltage for the

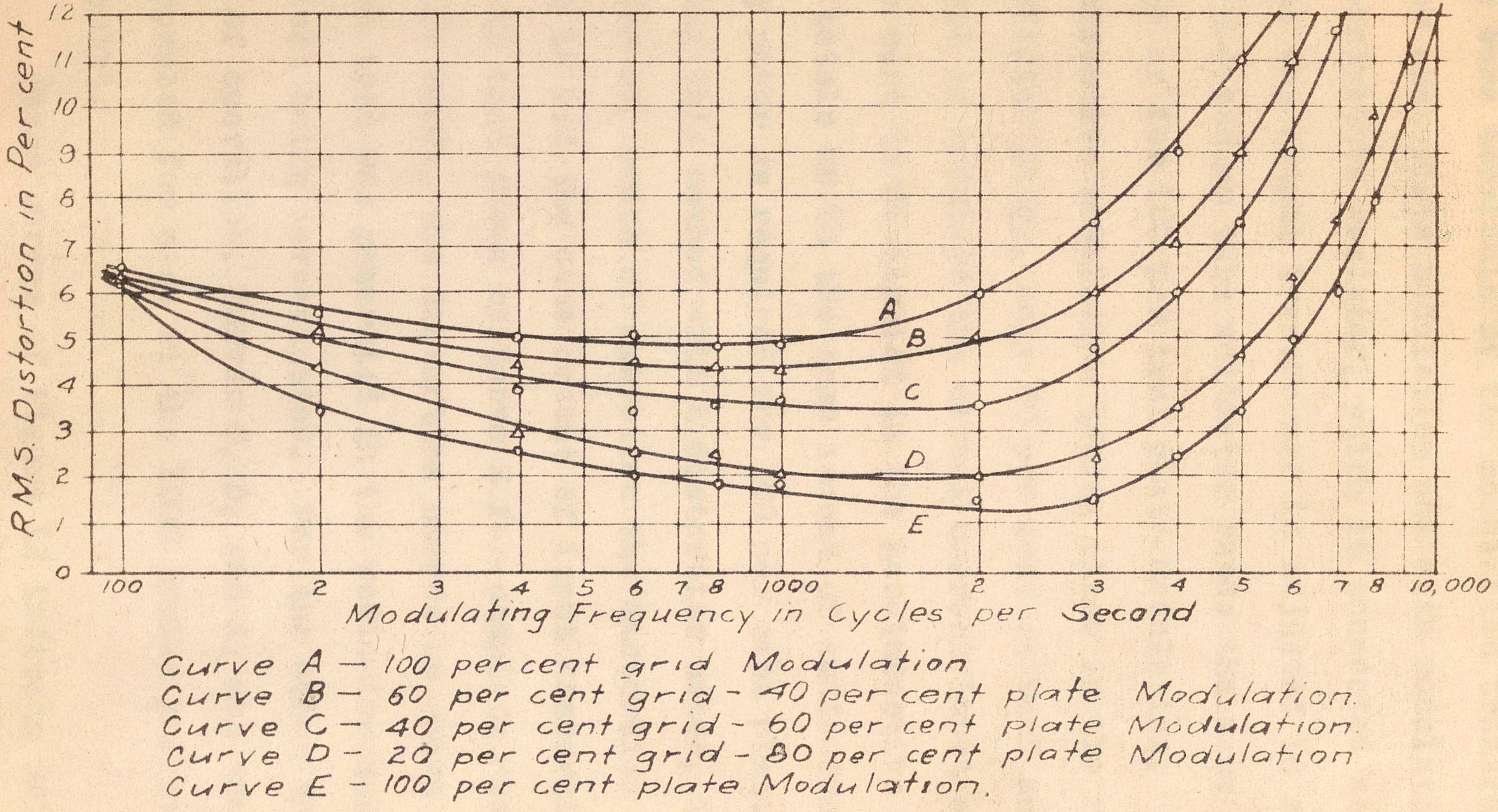

Fig. 12. - Distortion Characteristics of Grid-Plate Modulation without Feedback

particular mode. With the vacuum tube voltmeter connected to the same terminals of the modulation transformer as for 100 per cent plate modulation and with modulation applied, a non-inductive resistor, which is connected across a portion of the output transformer is adjusted in resistance until the vacuum tube voltmeter reads the same value of voltage as for 100 per cent plate modulation. With 80 per cent effective modulation taking place in the radio-frequency amplifier stage, only 80 per cent as much audio power is required to modulate the direct current input and the other 20 per cent is dissipated in the non-inductive resistor which totals up to the same amount of audio-frequency modulating power as required for 100 per cent plate modulation. Checking this method with a distortion meter, indication was that for all modes of operation the distortion curves of Figure 12 had the same amount of input distortion which was close to that shown by curve E for complete plate modulation. In other words, the distortion curves as shown give the distortion that was generated in the radio-frequency amplifier, which was being investigated. For the other three remaining modes of operation, curves C, B, and A, the same procedure was repeated for each at the 1000 cycles per second reference point.

These curves of Figure 12 indicate relatively high values of distortion in the higher audio-frequency ranges.

In order to keep the level of modulation for all audio-frequencies 100 per cent it was necessary to increase the audio-frequency input to the modulator amplifier to overcome the attenuation as shown in the frequency response characteristics of Figure 11. In doing so the modulating voltage input to the transformer had to be increased and increased distortion resulted as the magnetic saturation of the transformer was approached. Considering the audio-frequency range of the curves between 200 and 1000 cycles per second, it is evident that considerable distortion is developed by modulating the grid in conjunction with plate modulation. Considering grid-plate modulation with increased sizes of transmitting tubes, larger amounts of distortion may be developed, thereby, a means must be provided to decrease this distortion to a value which is acceptable by present day engineering practice. By using degenerative feedback an effective improvement can be obtained. Mr. Black,[35] of the Bell Telephone Laboratories, has shown that by feeding back a sample of the output of an amplifier to its input circuit, in phase opposition to its input voltage, there is a great increase in the performance stability of the amplifier, with a reduction in amplitude distortion, noise, and an improvement in frequency response character-

---

[35] H. S. Black, "Stabilized Feedback Amplifiers," <u>Bell System Technical Journal</u>, XIII (January, 1934), pp. 1-18.

istics. Assuming that an amplifier has a vector voltage gain of μ (μ meaning a complex ratio of the output voltage to the input voltage of the amplifier circuit and not the amplification constant of a vacuum tube) and a passive network β between the output and input with its polarity so arranged that the feedback voltage is 180 degrees out of phase with the input voltage. If the operation is stable, the amplifier gain is reduced such that the resulting gain is given by the expression

$$\frac{\mu}{1+\mu\beta} \tag{4}$$

To have stable feedback, that is, to be free from oscillation, the amplifier gain must decrease until its magnitude of β is less than one when the combined phase shifts in the amplifier and feedback circuit has reached 180 degrees. Otherwise, the reversed phase will supply regenerative feedback and sustained oscillation will take place.

The first consideration in applying degenerative feedback[36] to an amplifying system is to know how many stages of amplification are included in a feedback loop. The second is the amount of phase shift of the interstage coupling circuits at high audio-frequencies. Of these, phase shift is of fundamental importance in determining

---

[36] L. G. Young, "Applying Feedback to Broadcast Transmitters," <u>Electronics</u>, XII(August, 1939), p. 20.

whether the amplifier system will be stable. For a single stage of amplification using feedback, an unlimited amount of feedback is possible since the maximum phase shift is 90 degrees at extreme frequencies.[37] For a two stage amplifier the maximum phase shift at extreme audio-frequencies is 180 degrees and in operation it never reaches instability. But with three stages, 270 degrees are possible at the extreme frequencies so when feedback is introduced oscillations, usually, result unless the feedback voltage is low enough, such that β is less than one for the frequency response of the amplifier at 180 degrees phase shift.

Since the experimental transmitter consisted of a three stage of amplification over which the feedback loop is necessary considerations had to be given to phase shift.

To minimize the phase shift the modulator amplifier was constructed, using a phase-inverter circuit similar to one shown by J. R. Day and J. B. Russell[38] for practical feedback application. The modulation transformer of the experimental transmitter was the greatest source of phase shift due to its large leakage reactance. To minimize the phase shift in the radio-frequency stage, the ratio of reactive power to real power of the tank circuit was designed

---

[37] F. E. Terman, "Feedback Amplifier Design," __Electronics__, X (January, 1937), p. 12.

[38] J. R. Day and J. B. Russell, "Practical Feedback Amplifiers," __Electronics__, X (April, 1937), p. 16.

of low value so that no phase shift existed[39] within the experimental audio-frequency ranges.

In applying degenerative feedback to the experimental transmitter the audio input was adjusted until the output of the radio-frequency stage was completely modulated by observing a cathode-ray oscilloscope. Then, feedback, a rectified sample of the radio-frequency output, is introduced into the input of the modulator amplifier and increased until oscillation takes place and then backed off just below the point of oscillation. The audio input to the modulator amplifier is raised until the transmitter is modulated 100 per cent with degenerative feedback. The amount of effective feedback is determined from the difference in db settings of the attenuation box for the audio-frequency input to the modulator amplifier with and without degenerative feedback.

It was desired to have 30 db of effective feedback but oscillation would always occur for the experimental transmitter with feedback greater than 17db since the phase shift of the modulation transformer was too great. It was decided that 15 db of feedback was sufficient to demonstrate the improvement obtained by its application to the grid-plate modulated transmitter. Figure 13 shows the resulting distortion curves with 15 db of degenerative feed-

---

[39] Young, op. cit., p. 24.

back and considerable improvement can be observed over those curves in Figure 12. Curve A represents complete grid modulation; curve B, 40 per cent grid - 60 per cent plate modulation; and curve C, complete plate modulation. Curves for the other two modes of grid plate modulation were not shown since they fell within the limiting curves A and C and would have confused the group of curves.

Phase shift characteristics which limited the amount of feedback were measured and found to be not more than 20 degrees for both the radio frequency amplifier and the phase inverter circuit. Practically all the phase existed in the transformer. Phase shift characteristics of the experimental transmitter are shown in Figure 14, curve A representing the phase shift without any feedback and curves B and C with 8 and 15 db degenerative feedback, respectively. The method of measuring phase shift was to use a cathode-ray oscilloscope with one set of deflection plates connected to the input of the modulator amplifier and the other set of deflection plates to the output of the feedback rectifier. The method of converting the observed ellipse produced on the cathode ray oscilloscope screen into degrees of phase shift is discussed in Appendix V.

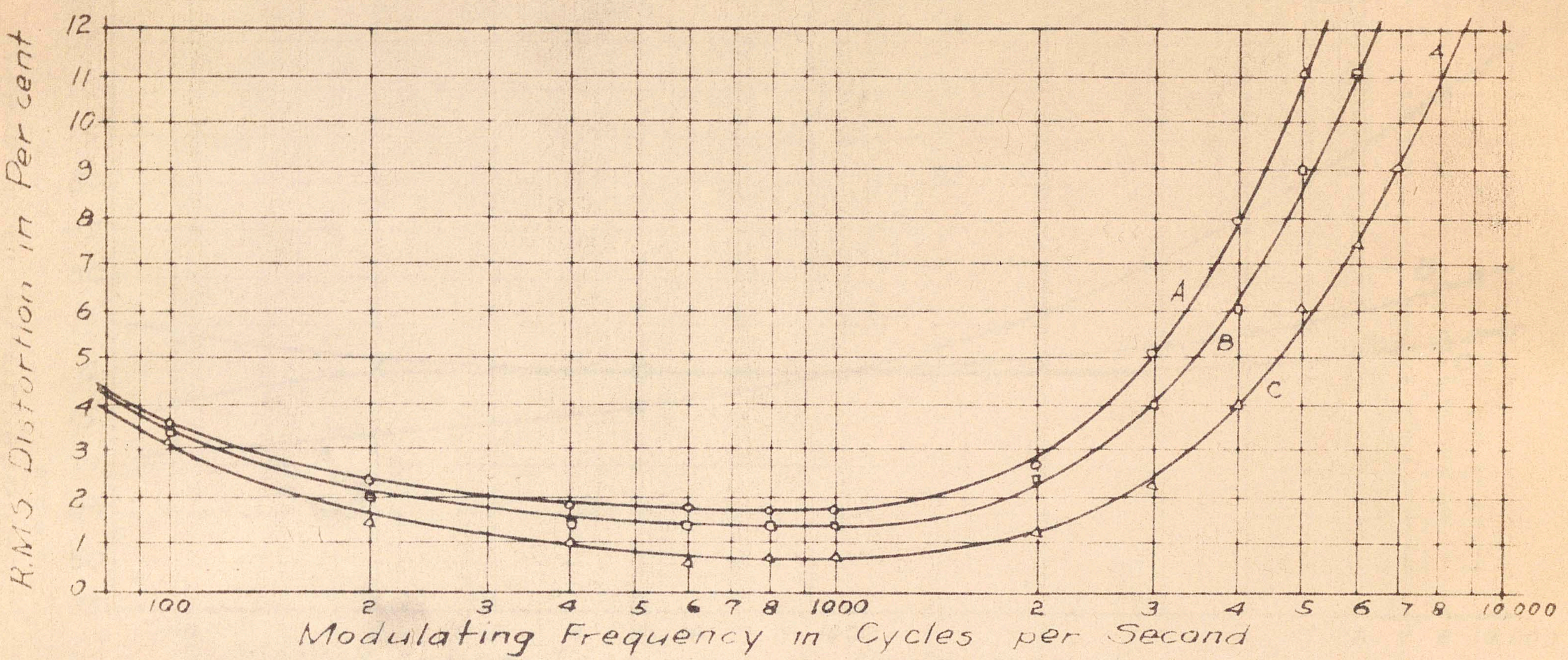

Curve A - 100 per cent Grid Modulation with 1.5 db Feedback
Curve B - 40 percent Grid - 60 per cent Plate Modulation with 15 db Feedback
Curve C - 100 percent Plate Modulation with 15 db Feedback

Fig 13 — Distortion Characteristics of Grid-Plate Modulation with Feedback.

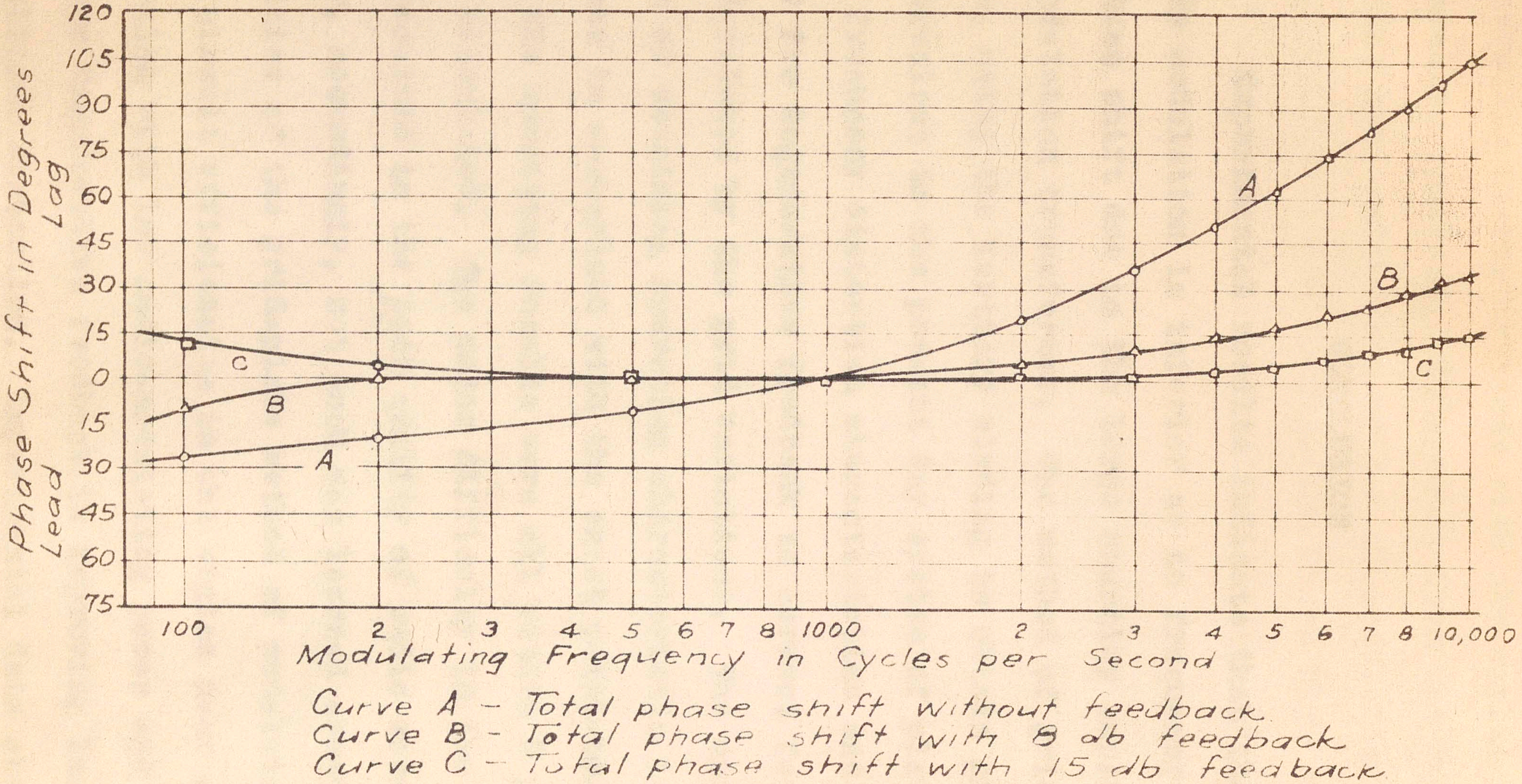

Fig. 14.– Phase Shift Characteristics of Experimental Grid-Plate Modulated Transmitter.

CONCLUSION

Experimental results indicate that the method of cathode modulation is inferior as to frequency distortion and phase shift due to the large shunting capacitance across the modulation transformer. The method of grid-plate modulation, using the tertiary winding to obtain grid variations, is equivalent to the present day system of plate modulation as to frequency distortion characteristics and its applicability for degenerative feedback to correct for the distortion developed by the grid variations. The approximate method of obtaining operating characteristic is sufficiently accurate in comparison with the exact point-to-point system since the operating results were all within 4 per cent of those calculated. The major difficulty in the experimental work resulted in the poor quality of audio modulation transformer, accordingly, not much was learned about all the possibilities of the grid-plate method of modulation as to high plate circuit efficiencies in the region near complete grid modulation with low audio-modulating power and the effects of large degenerative feedback in improving large amounts of amplitude distortion. Experimental data obtained were reasonably good in checking the principles of modulation, design of operating conditions by approximate solution, and operating characteristics with the application of degenerative feedback. It appears from the work that has been done that grid-plate system of modulation has definite possibility for application where high quality transmission is required with low initial cost of equipment and power consumption.

BIBLIOGRAPHY

Chambers, J. A., *et al.*, "The WLW 500-Watt Broadcast Transmitter," *Proc. I. R. E.*, XXII (October, 1934) 1151-1180.

Chireix, H., "High Power Outphasing Modulation," *Proc. I. R. E.*, XXIII (November, 1935), 1370-1392.

Culver, Charles A., "Series Modulator," *Proc. I. R. E.*, XXIII (May, 1935), 481-495.

Doherty, W. H., "A New High Efficiency Power Amplifier for Modulated Waves," *Proc. I. R. E.*, XXIV (September, 1936), 1163-1182.

Dome, R. B., "High Efficiency Modulator System," *Proc. I. R. E.*, XXVI (August, 1938), 963-982.

Glasgow, R. S., "*Principles of Radio Engineering*, (1st ed., New York: McGraw-Hill Book Co., 1936), 273.

Hawkins, J. N. A., "A New High Efficiency Linear Amplifier," *Radio*, No. 209 (May, 1936), 8.

Jones, F. C., "Cathode Modulation," *Radio*, October, 1939.

Kishpaugh, A. W. and Coram, R. E., "Low Power Radio Transmitters for Radio Broadcasting," *Proc. I. R. E.*, XXI (February, 1933), 212.

Loeb, J., "Modern Methods of Modulation," *Electronics*, June, 1936, p. 40.

Mouromtseff, I. E. and Kozanowski, H. N., "Analysis of the Operation of Vacuum Tubes as Class C Amplifiers," *Proc. I. R. E.*, XXIII (July, 1935), 752-778.

Mouromtseff, I. E. and Kozanowski, H. N., "Comparative Analysis of Water Cooled Tubes as Class B Audio Amplifiers," *Proc. I. R. E.*, XXIII (October, 1935), 760.

Prince, D. C., "Vacuum Tubes as Power Oscillators," *Proc. I. R. E.*, XI (June, August, and October, 1923), 275, 405, 527.

Radio Amateur's Handbook, The (17th ed.; West Hartford, Conn.: American Radio Relay League, 1940).

R. C. A. Transmitting Tube Manual, R. C. A. Manufacturing Co., Inc., (1938).

Terman, F. E., "*Radio Engineering*," (2d ed.) New York: McGraw-Hill Book Co., 1937, 536, 537.

Terman, F. E. and Everest, F. A., "Dynamic Shift Grid Bias Modulation," *Radio*, No. 211 (July, 1936), 22.

Terman, F. E. and Ferns, J. H., "The Calculation of Class C Amplifier and Harmonic Generator Performance of Screen-Grid and Similar Tubes," *Proc. I. R. E.*, XXII (March, 1934), 359-373.

Terman, F. E. and Roake, W. C., "Calculation and Design of Class C Amplifiers," *Proc. I. R. E.*, XXIV (April, 1936), 620-632.

Terman, F. E. and Woodyard, John R., "A High Efficiency Grid Modulated Amplifier," *Proc. I. R. E.*, XXVI (August, 1938), 929-945.

Vance, A. W., "A High Efficiency Modulating System," *Proc. I. R. E.*, XXVII (August, 1939), 506-511.

Wagener, W. G., "Simplified Methods of Computing Performance of Transmitting Tubes," Proc. I. R. E., XXV (January, 1937), 47, 53, 67.

Waller, L. C., "Amateur Application of the Magic Eye," *QST*, XX (October, 1935).

Wirkler, Walter H. and Collins, Arthur A., "Grid-Bias Modulation of a 100-Watt Type Power Amplifier," *QST*, XIX (March, 1935), 29.

APPENDIX I

ANALYSIS OF PLATE CURRENT IMPULSES

The curves as shown in Figure 8 may be calculated as follows: the wave form of the plate current pulse has a shape corresponding to equation (1), that is,

$$\text{Total space current} = g_m\left(e_{g_{max}} + \frac{e_p}{\mu}\right)^x$$

The exponent x is taken as unity and the plate current pulse will be essentially a section of a sine wave for the duration of 2θ and the height above the base line, as shown in Figure 15, will be I_m. The angle of plate current cut-off θ is defined as the angle whose cosine equals the ratio of the direct-current component amplitude to the alternating-current component amplitude. For simplicity, θ is called the cut-off angle.[40] The plate current flow then occurs over a portion of a cycle and is equal to 2θ.

---

[40] R. S. Glasgow, Principles of Radio Engineering, (1st ed., New York: McGraw-Hill Book Co., 1936), p. 273.

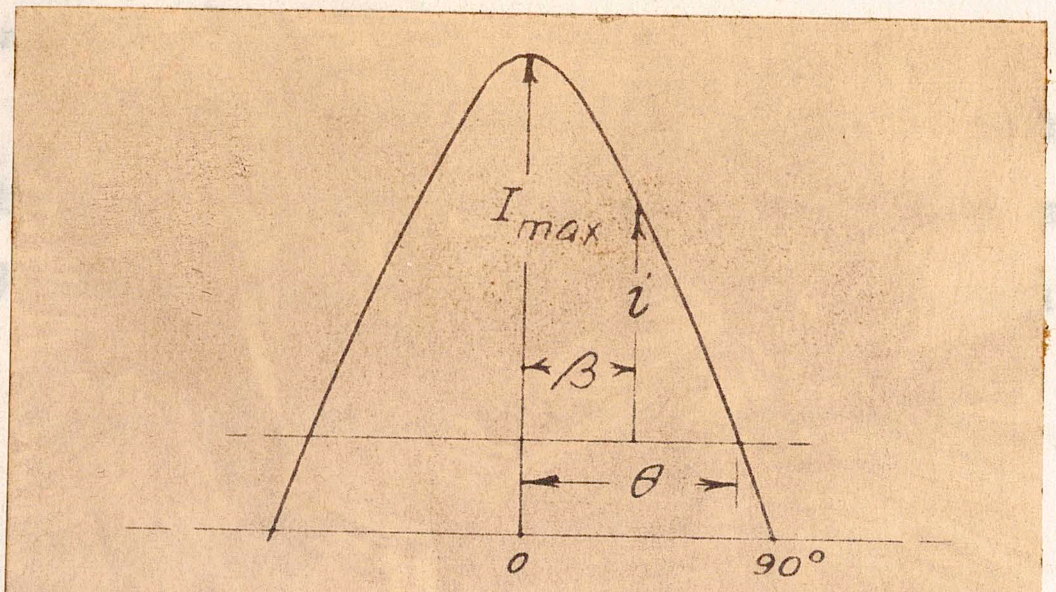

Fig. 15. - Notation of Current Impulse.

Let I_{max} equal to unity, then by the usual Fourier Theorem for plate current, we have

$$I_{dc}=\int_{0}^{\beta=\theta}\left[\cos\beta-\cos\theta\right]d\beta \qquad (5)$$

Integrating, we have,

$$I_{dc}=\frac{1}{\pi}(\sin\theta-\theta\cos\theta) \qquad (6)$$

The maximum plate current I_m occurs when t is equal to zero, so that

$$I_m=(1-\cos\theta) \qquad (7)$$

Dividing (6) by (7), we have,

$$\frac{I_{dc}}{I_m}=\frac{1}{\pi}\times\frac{\sin\theta-\theta\cos\theta}{1-\cos\theta} \qquad (8)$$

Substituting cut-off angles into (8) we obtain the ratio of the average value of direct current to the peak conduction value in the tube. These were plotted in

Figure 8, page 24.

To obtain the fundamental radio-frequency component of the plate current pulse, equation (5) is multiplied by cos β and averaged over the cycle. This results in

$$I_P = \frac{2}{\pi}\int_0^{\beta=\theta}\left[\cos\beta - \cos\theta\right]\cos\beta \, d\beta \qquad (9)$$

Integrating,

$$I_p = \frac{2}{\pi}\times\frac{2\theta - \sin 2\theta}{4} - \cos\theta\sin\theta \qquad (10)$$

Dividing equation (10) by Equation (7), we have the ratio of fundamental radio-frequency component of current to the maximum value.

$$\frac{I_p}{I_m} = \frac{1}{2\pi}\times\frac{2\theta - \sin 2\theta - 4\cos\theta\sin\theta}{1-\cos 2\theta} \qquad (11)$$

To obtain the discussed ratios for some values of exponents other than unity the following equations will produce the required results,

$$\frac{I_{dc}}{I_m} = \frac{1}{\pi}\int_0^{\beta=\theta}\left[\frac{\cos\beta - \cos\theta}{1-\cos\theta}\right]^x d\beta \qquad (12)$$

$$\frac{I_p}{I_m} = \frac{2}{\pi}\int_0^{\beta=\theta}\left[\frac{\cos\beta - \cos\theta}{1-\cos\theta}\right]^x \cos\beta \, d\beta \qquad (13)$$

APPENDIX II

CALCULATIONS FOR CLASS C TELEPHONY, GRID MODULATED AMPLIFIER

For grid-modulation service of a class C radio-frequency power amplifier, the maximum rating for calculations are the same as those of class B radio-frequency power amplifier telephony service[41] where modulation is also applied to the grid circuit. For the type 10 tube used in the experimental transmitter, the maximum ratings for carrier conditions are:

Direct plate voltage, E_b = 600 volts
Direct Plate Current, E_b = 50 milliamperes
Direct-current plate power input, P. I. = 30 watts
Plate dissipation = 20 watts

For grid modulation the peak is considered first. Thus, at the peak, E_b = 600 volts, I_b = 100 milliamperes since it doubles at the peak of the audio cycle, and cut-off angle $\theta = 90^\circ$. From Figure 8, page 24, $I_{dc} / I_m = 0.319$, and $I_p / I_m = 0.5$. Therefore,

$$I_p = I_m \times 0.5 = 314 \quad 0.5 = 157 \text{ milliamperes}$$

---

[41] Wagener, op. cit., p. 67.

From the tube characteristic curves, Figure 16, the maximum current point of 314 milliamperes is found on the equal grid and plate voltage line.

From this is obtained $e_{g\,max.} = E_{p\,min} = 140$ volts. Then,

$E_o = 600 - 140 = 460$ volts

$E_c = \frac{600}{8} = 75$ volts

$E_g = E_c + e_{g\,max.} = 75 + 140 = 215$ volts

$P.\ O. = 1/2\ I_p E_o = 1/2 \times 0.157 \times 460 = 36.1$ watts

For carrier operation, E_o and I_p must be cut to one half of peak value. Accordingly, $I_p = 157/2 = 79$ milliamperes, and $E_o = 460/2 = 230$ volts.

Assuming that for carrier operation the cut-off angle θ is 63 degrees as an approximation to determine operating voltage points. From Figure 8, page 24,

$I_{dc} / I_m = 0.23$ $\qquad$ $I_p / I_m = 0.4$

$I_m = \frac{I_p}{0.4} = \frac{79}{0.4}$ $\qquad$ 196 milliamperes

$I_{dc} = I_m \times 0.23 = 196 \times 0.23 = 45$ milliamperes

$E_{p\,min} = E_b - E_o = 600 - 230 = 270$ volts

From the tube characteristic curves, Figure 16, the maximum current curves intersect with the $E_{b\,min}$ ordinate where $e_{g\,max.}$ is equal to 55 volts.

The radio-frequency excitation voltage of 215 volts from the driving stage remains constant for peak or carrier conditions and the grid bias voltage required for

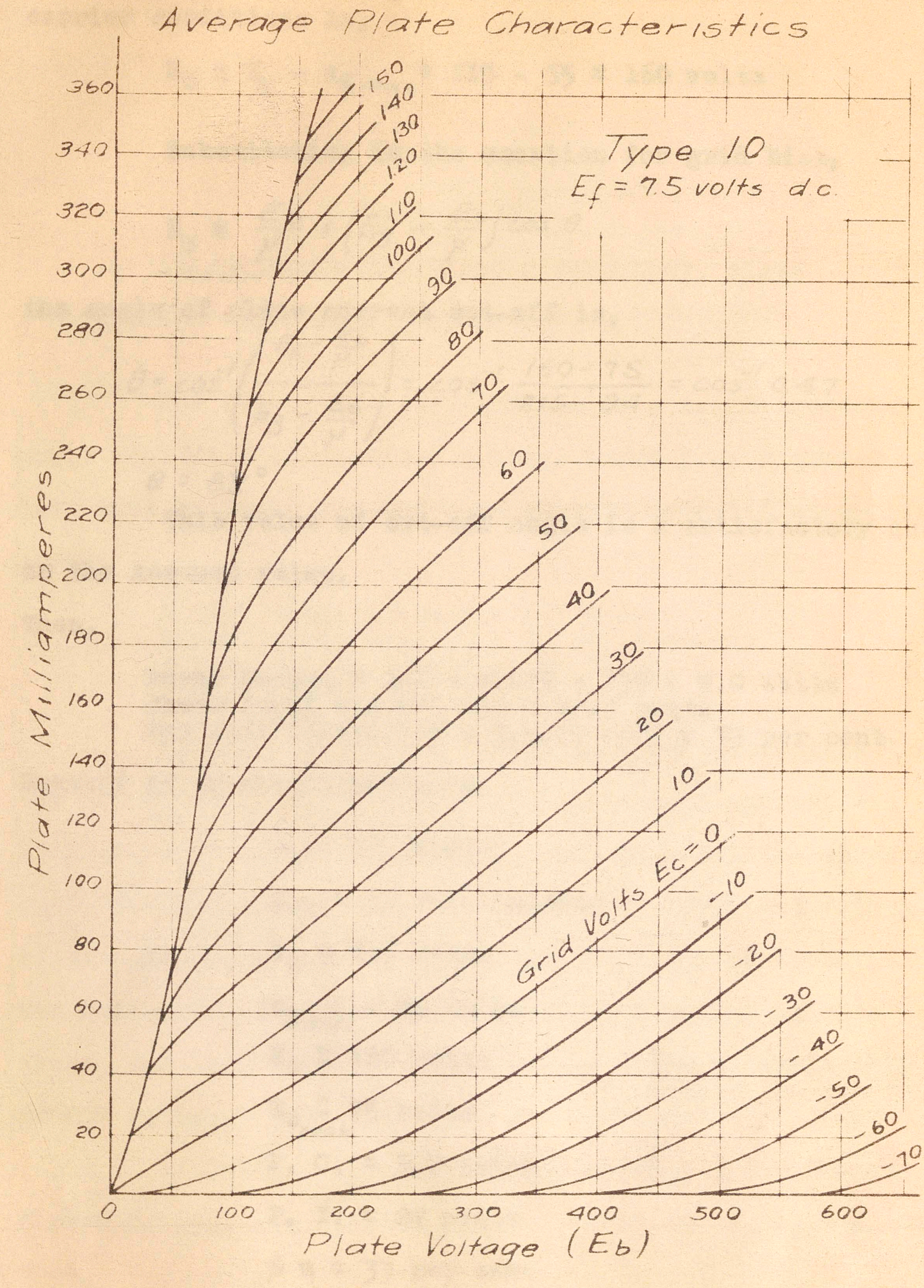

Fig. 16.- I_p-E_p Characteristics of a Transmitting Tube.

carrier conditions is,

$$E_c = E_g - e_{g_{max}} = 215 - 55 = 160 \text{ volts}$$

Substituting in the equation for grid bias,

$$E_c = \frac{E_b}{\mu} + \left(E_g - \frac{E_o}{\mu}\right)\cos\theta$$

the angle of plate current cut-off is,

$$\theta = \cos^{-1}\left(\frac{E_c - \frac{E_b}{\mu}}{E_g - \frac{E_o}{\mu}}\right) = \cos^{-1}\frac{160-75}{215-34} = \cos^{-1} 0.47$$

$$\theta = 62^\circ$$

This value of cut-off angle is a satisfactory check on the assumed value.

Then,

Power Output = $1/2 \times 0.079 \times 230 = 9.0$ watts
Power input = $0.045 \times 60 = 27.0$ watts
Per cent Efficiency = $9.0/27 \times 100 = 33$ per cent

Summary of carrier conditions:

$E_b = 600$ volts
$I_{dc} = 45$ milliamperes
$E_g = 215$ volts
$e_{g_{max}} = 55$ volts
$E_c = 160$ volts
$E_{c_{peak}} = 75$ volts
P. O. = 9.0 watts
P. I. = 27 watts
$\%\ \eta = 33$ per cent
$E_o = 230$ volts

APPENDIX III

CALCULATIONS FOR CLASS C TELEPHONY, PLATE MODULATED AMPLIFIER

For plate modulated service of a radio-frequency power amplifier the maximum ratings taken from a transmitting tube bulletin for the type 10 tube operated at carrier level;

Direct plate voltage = 500 volts
Direct plate current = 60 milliamperes
Direct-Current plate power input, P. I. = 30 watts
Direct Dissipation = 13.5 watts

In order to obtain reasonable characteristics from the modulation transformer, the plate supply current was limited to 45 milliamperes. The grid bias for the class of operation was assumed several times with different values of cut-off angle until the proper efficiency of operation was obtained. In order to show only one set of calculations, the bias voltage is 180 volts; maximum permissible is 200 volts.

Assuming a 60 degree plate current cut-off angle Figure 8, page 24, gives $I_{dc}/I_m = 0.218$ and $I_p/I_m = 0.385$. Then,

$$I_m = I_{dc}/0.218 = 45/0.218 = 207 \text{ milliamperes}$$

From the tube characteristics, Figure 16, the maximum current absicca intersects the equal grid and plate voltage line at $E_{p\,min} = 100$ volts and $e_{g\,max.} = 100$ volts. From this,

$$E_g = e_{g\,max} + E_c = 100 + 180 = 280 \text{ volts}$$

$$E_o = E_b - E_{p\,min} = 500 - 100 = 400 \text{ volts}$$

Checking the cut-off angle,

$$\theta = \cos^{-1}\left(\frac{E_c - \frac{E_b}{\mu}}{E_g - \frac{E_o}{\mu}}\right) = \cos^{-1}\frac{180-63}{280-50} = \cos^{-1} 0.51$$

$$\theta = 59.4°$$

This checks with the initial estimate and is satisfactory. Then,

$I_p = I_m \times 0.386 = 207 \times 0.385 = 80$ milliamperes
P. O. = $1/2 \times 0.080 \times 40 = 16.0$ watts
P. I. = $0.045 \times 500 = 22.5$ watts
% = $16.0/22.5 \times 100 = 71$ per cent

When complete modulation is taking place the plate voltage to the tube is doubled for no distortion including the plate current I_b and the radio-frequency voltage. These values are, then, $E_b = 1000$ volts, $E_o = 800$ volts, and $I_p = 160$ milliamperes.

At the peak condition a trial value is assumed and found to be 74 degrees for cut-off angle. From Figure 8, page 24, $I_p/I_m = 0.448$.

$I_m = I_p/0.448 = 160/0.448 = 356$ milliamperes. From the peak values, we have,

$$E_{p\,min} = 1000 - 800 = 200 \text{ volts.}$$

Then from the tube characteristics curves, the intersection of the 356 milliamperes absicca with the $E_{p\,min}$ 200 volt ordinate, it is found that $e_{g\,max}$ must be 150 volts. Since the grid excitation source remains constant there must be a shift in grid bias to provide the peak excitation voltage necessary.[42]

$$E_c = E_g - e_{g\,max} = 280 - 150 = 130 \text{ volts}$$

There is necessary a 50 volt change in bias to provide low distortion output of the plate modulated radio-frequency amplifier.

$E_b = 500$ volts
$I_{dc} = 45$ milliamperes
$E_g = 280$ volts
$e_{g\,max} = 100$ volts
$E_c = 180$ volts
$E_c = 130$ volts
P. O. = 16.0 watts
P. I. = 22.5 watts
$\% \eta = 71$ per cent
$E_o = 400$ volts

---

[42] Mouromtseff and Kozanowski, <u>op. cit.</u>, p. 760.

APPENDIX IV

VACUUM TUBE VOLTMETER

Since it was desired to measure radio-frequency voltages up to 800 volt peaks with a minimum amount of current from the source being measured and a minimum amount of input capacitance, a vacuum tube voltmeter was constructed since none was available with such characteristics. The construction is similar to that by Mr. Waller[43] with the exception that higher voltages are measured and the input capacitance is lower. A type 55 tube is used since the triode section measured with a radio-frequency bridge gives the lowest input capacitance of the receiving tube class, the input capacitance was measured to be 7 μμfd with short leads. The instrument is based on the "slide-back" principle and was calibrated with a 60 cycle high voltage source using a standard voltmeter up to 750 volts. The accuracy may change somewhat with the application of radio-frequency voltages but with the measurements made the percentage of error was believed to be very small. A schematic diagram is shown in Figure 17.

---

[43] L. C. Waller, "Amateur Application of the Magic Eye," QST, XX(October, 1935), p. 35.

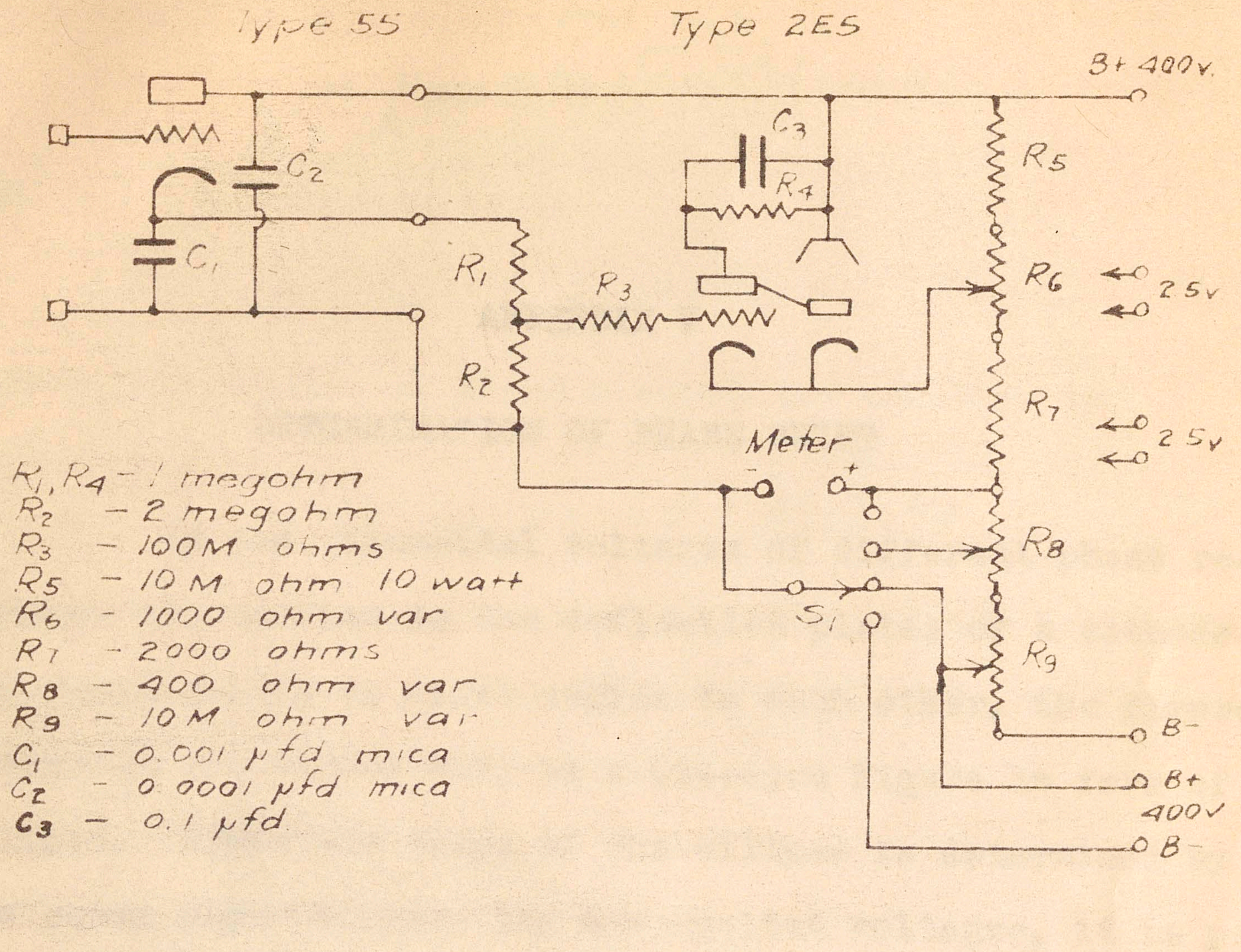

Fig. 17. - Schematic of Vacuum Tube Voltmeter

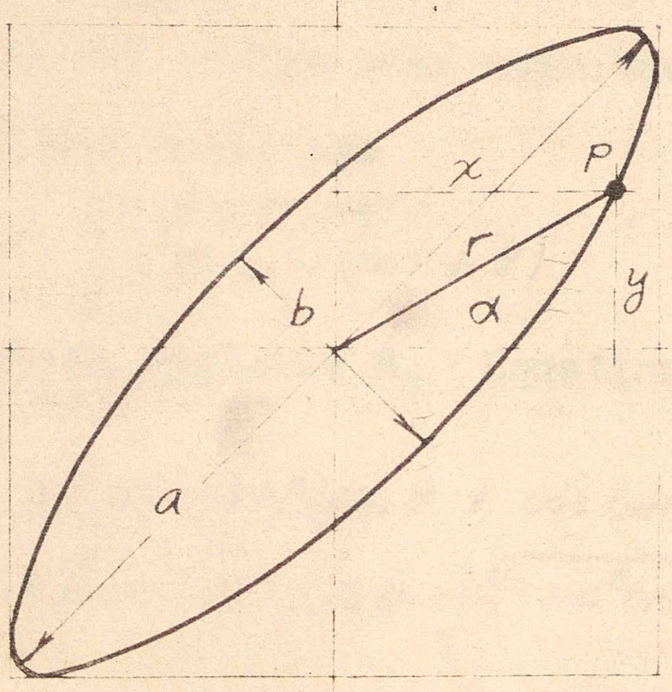

Fig. 18.-Method of obtaining Phase Shift Characteristics.

APPENDIX V

DETERMINATION OF PHASE SHIFT

If two sinusoidal voltages of different phase relations are applied to the deflection plates of a cathode-ray oscilloscope at right angles to each other, the figure traced on the screen will be a Lissajou Figure in form of an ellipse. Since the shape of the ellipse is determined by the phase angle between the two applied voltages, it is possible to use this phenomenon for measuring the angular phase relation. Considering that the voltages applied to the deflection plates are of the same magnitude and frequency the equations of the spot are

$$x = A \sin(\omega t) \qquad (14)$$

$$y = B \sin(\omega t + \theta) \qquad (15)$$

where θ is the phase angle of B. Equation (15) can be written

$$\begin{aligned} y &= B(\sin(\omega t) \cos\theta + \cos(\omega t) \sin) \\ &= B[\sin(\omega t) \cos\theta + \sqrt{1-\sin^2(\omega t)}\,(\sin\theta)] \end{aligned} \qquad (16)$$

From (14)

$$\sin(\omega t) = \frac{x}{A} \qquad (17)$$

Substituting (17) in (16) gives

$$\frac{Y}{B} - \frac{X}{A}\cos\theta = \sqrt{1-\frac{X^2}{A^2}}(\sin\theta)$$

Squaring and combining terms

$$\frac{X^2}{A^2} + \frac{Y^2}{B^2} - \frac{2XY}{AB}\cos\theta = \sin^2\theta \qquad (18)$$

With the magnitudes of A and B equal the equation is simplified

$$x^2+y^2-2xy\cos\theta = A^2\sin^2\theta \qquad (19)$$

where x and y are the coordinates of the point P in Figure 18; A, the amplitude of the deflection voltage, and θ, the phase angle between the components.

Changing the form of equation (19) into polar coordinates and simplifying, gives

$$r^2-r^2\sin 2\alpha\cos\theta = A^2\sin^2\theta \qquad (20)$$

From the Figure 18 it may be seen that when α is 45 degrees the radius r is one half of the major axis and similarly if α is 45 degrees in the fourth quadrant the radius r is one half of the minor axis of the ellipse. Substituting these values in equation (20) gives

$$\frac{a^2}{4} - \frac{a^2}{4}\cos\theta = \frac{b^2}{4} + \frac{b^2}{4}\cos\theta$$

from which

$$\cos\theta = \frac{a^2-b^2}{a^2+b^2} \qquad (21)$$

From this the phase angle can be determined by simply measuring the major and minor axis of the ellipse produced on the cathode-ray oscilloscope and substituting the values in equation (21). Each signal to the plates must be of the same amplitude and as free from distortion as possible or error will result in the measurements.

NAME AND ADDRESS	DATE
[redacted]	