ON THE JOINT DISTRIBUTION

OF COVERAGES

By

PAO-LIANG CHEN

Bachelor of Arts
National Chengchi University
Taipei, China
1965

Master of Science in Statistics
San Diego State University
San Diego, California
1973

Submitted to the Faculty of the Graduate College
of the Oklahoma State University
in partial fulfillment of the requirements
for the Degree of
DOCTOR OF PHILOSOPHY
July, 1976

Thesis
1976 D
C5180
cop. 2

OKLAHOMA STATE
UNIVERSITY
LIBRARY

ON THE JOINT DISTRIBUTION

OF COVERAGES

Thesis Approved:

David L. Weeks

Thesis Adviser

Ronald W. McNew

W. R. Wade

Robert K. Johnson

Norman N. Durham

Dean of the Graduate College

964121

ACKNOWLEDGEMENTS

I am grateful to Dr. David L. Weeks, my adviser, for suggesting the topic of this study and for his guidance all through the formulation of this thesis. I would like to thank Dr. William D. Warde, Dr. Ronald W. McNew and Dr. Rodger K. Johnson for serving on my committee. I owe Dr. Warde a debt of gratitude for his many useful suggestions.

I wish to express my sincere appreciation to Miss Melita Wyatt for her fine job in typing this manuscript and all my previous reports.

A special thanks goes to my wife, Feng-lai, whose help and understanding are invaluable to me.

TABLE OF CONTENTS

LIST OF TABLES

LIST OF FIGURES

Figure Page

CHAPTER I

INTRODUCTION

1. Statement of the Problem

The problem which will be considered in this study is that of finding the joint distribution of the coverages of two rectangular targets by one rectangular pattern. To present the problem clearly, let us consider a typical situation which is exemplified by Figure 1 below:

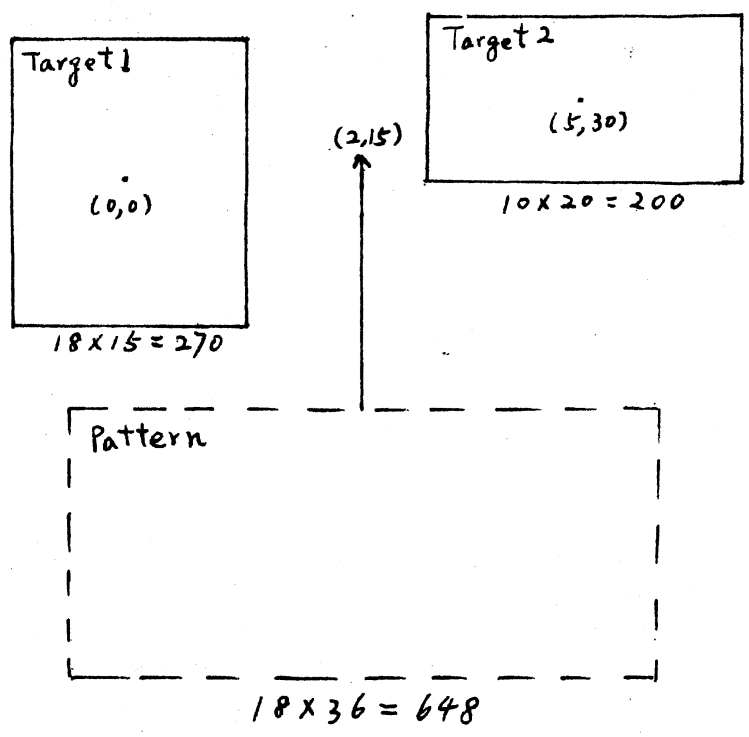

Figure 1. A Typical Situation

In the diagram, (0, 0) and (5, 30) are the centers of Target 1 and Target 2 respectively. The sizes of the targets and the pattern are indicated beneath each of them. The aimpoint of the pattern is (2, 15). The coordinate system used here is range direction-deflection direction where the range direction is vertical and the deflection direction is horizontal.

The assumptions we make in regard to the general situation are:

(1) Both targets are rectangular in shape with sides of different target elements parallel to each other.

(2) The pattern is also rectangular in shape.

(3) Pattern sides are parallel to target sides.

(4) The landing point (ℓ, ℓ') of the pattern center is assumed to have a bivariate normal distribution with correlation coefficient $\rho = 0$. That is

$$f(\ell, \ell') = \frac{1}{2\pi\,\sigma\,\sigma'} \exp\{-\frac{1}{2}[(\frac{\ell-M}{\sigma})^2 + (\frac{\ell'-M'}{\sigma'})^2]\}$$

$$-\infty < y < \infty$$

$$-\infty < y' < \infty.$$

where (M, M') is the aimpoint of the pattern center point, and where σ and σ' are the standard deviations of the landing point in the range and deflection directions respectively. Note that if we let $y=\frac{\ell}{\sigma}$, $y'=\frac{\ell'}{\sigma'}$, $\mu=\frac{M}{\sigma}$, and $\mu'=\frac{M'}{\sigma'}$, then the joint p.d.f. of y and y' is given by :

$$f(y, y') = \frac{1}{2\pi} \exp\{-\frac{1}{2}[(y-\mu)^2 + (y'-\mu')^2]\}$$

$$-\infty < y < \infty$$

$$-\infty < y' < \infty. \qquad (1.1)$$

The question which prompts our study is: "Can we make any probability statements about the joint coverage on the two targets under this given situation?" More specifically:

(1) What is the probability of hitting both targets?

(2) What is the probability of hitting Target 1 but missing Target 2?

(3) What is the probability of hitting Target 2 but missing Target 1?

(4) What is the probability of missing both targets?

(5) What is the probability of achieving the maximum possible coverage on both targets?

(6) What is, say, $Pr(Z_1 \geq 100 \text{ and } Z_2 \geq 50)$? ($Z_1$ is the coverage on Target 1 and Z_2 is the coverage on Target 2 by the pattern.)

2. A Review of Previous Work

Very little has been done on the subject of the joint distribution of two coverages (linear or rectangular). The majority of the earlier work in this field deals with the average value of coverages, e.g., the Expected Fractional Coverage. In the previous work, no <u>probability statements</u> are given with regard to coverage except in a study done by Gay and Weeks (1973). They derive the distribution function of the fractional coverage of one rectangular target by one rectangular pattern. A computer program using numerical integration was used to obtain the distribution function. A plotting program was also included.

The work by Gay and Weeks is by far the most relevant to our current study. Although it does not consider the joint probability of <u>two</u> rectangular coverages. Heiser (1971) also studied the distribution of

coverage on one rectangular target, but he allowed a free delivery angle of the rectangular pattern which made the coverage on the target non-rectangular in general.

In "Matrix Evaluator Computer Program" (1974), a functional relationship between the linear coverage and the landing point of the pattern center was given. This relationship has proven to be very useful in our derivation of the joint distribution of two linear coverages.

3. The Order of Investigation

We shall first derive in Chapter II the cumulative distribution function (c.d.f.) and the probability density function (p.d.f.) of the coverage of one linear target by one linear pattern. In Chapter III, the c.d.f. and p.d.f. of the coverage of one rectangular target by one rectangular pattern is found. The approach we use in Chapter III is different from that used by Gay and Weeks. As a consequence, an equivalent but a somewhat more compact form of the c.d.f. is obtained.

In Chapters IV and V, we derive the joint c.d.f. and the joint p.d.f. of the coverages of <u>two linear</u> targets by one <u>linear</u> pattern.

It is in Chapter VI that the problem of the joint c.d.f. of two rectangular coverages is considered. In Section 1, of Chapter VI, we follow the line of approach used hitherto to obtain a "mathematical expression" for the joint c.d.f., which turns out to be of little practical value. In Section 2, the approach used by Gay and Weeks is used to obtain another "mathematical expression" for the joint c.d.f. of two rectangular coverages. Unfortunately, it is again untamed by attempts to computer program it. In both cases, we point out the difficulties and complexities involved in trying to program it.

In Chapter VII, we consider the joint probabilities of some "interesting" and "useful" cases. Namely, Question (1) through Question (5) stated in Section 1 of this chapter. Exact probabilities are obtained in closed forms in these cases.

In Chapter VIII, the problem of the joint c.d.f. of two rectangular coverages is picked up again. An approximation to it is given. Chapter IX outlines an easy way to extend this study to m rectangular targets. In the final chapter, we give a summary and indicate some possible extensions.

CHAPTER II

THE DISTRIBUTION OF ONE LINEAR COVERAGE*

We start our investigation by considering the simplest case, that being one linear pattern delivered on one linear target. Let us adopt the following notation:

L_T = target length

β = target center

L_P = pattern length

M = aimpoint

σ = standard deviation of the landing point of the pattern center (aiming error)

$T = L_T/2\sigma$ standardized half target length

$\theta = \beta/\sigma$ standardized target center

$P = L_P/2\sigma$ standardized half pattern length

$\mu = M/\sigma$ standardized aimpoint.

Figure 2 illustrates the situation of one linear pattern being delivered on one linear target using the above notation.

---

* To make the reference easy, we shall sometimes refer to "the coverage on one linear target by one linear pattern" simply as "one linear coverage." Similarly, "the coverage on two linear targets by one linear pattern" is referred to as "two linear coverages", and "the coverage on one rectangular coverage by one rectangular pattern" as "one rectangular coverage", etc.

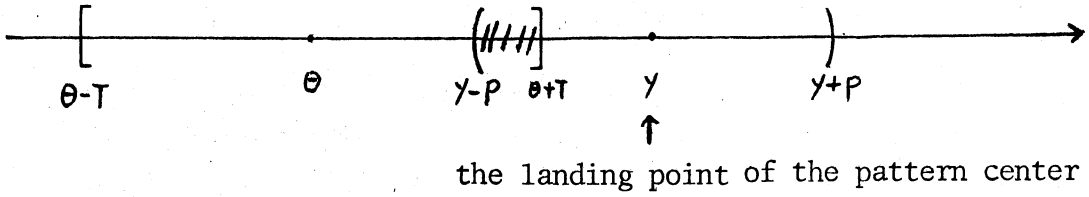

[ ] indicates the limits of the target

( ) indicates the limits of the pattern realization

Figure 2. A Linear Pattern Being Delivered on a Linear Target

In Figure 2, y is the standardized landing point of the pattern center point, and according to the assumptions stated previously, y has a normal (μ, 1) distribution of the form

$$f(y) = \frac{1}{\sqrt{2\pi}} \exp\{-\frac{1}{2}(y-\mu)^2\} \qquad -\infty < y < \infty. \tag{2.1}$$

Also, the shaded portion of the line in Figure 2 is the standardized linear coverage. Since all of the subsequent discussion will be in terms of standardized distances (being expressed in units of standard deviations), we shall drop the modifier "standardized" henceforth.

The functional relationship between C, the random variable which represents the linear coverage of the target, and Y, the random variable which represents the landing point of the pattern center is as follows: (This is a generalized version of what has been established in "Matrix Evaluator Computer program" (1974, pp. 5-6).)

$$C = h(y) = \begin{cases} 0 & \text{for} \quad y < -S+\theta \\ S-\theta+y & \text{for} \quad -S+\theta \leq y < -R+\theta \\ S-R & \text{for} \quad -R+\theta \leq y < R+\theta \\ S+\theta-y & \text{for} \quad R+\theta \leq y < S+\theta \\ 0 & \text{for} \quad y \geq S+\theta \end{cases} \tag{2.2}$$

where $S = T+P$ and $R = |T-P|$. The graph of this function is found in Figure 3.

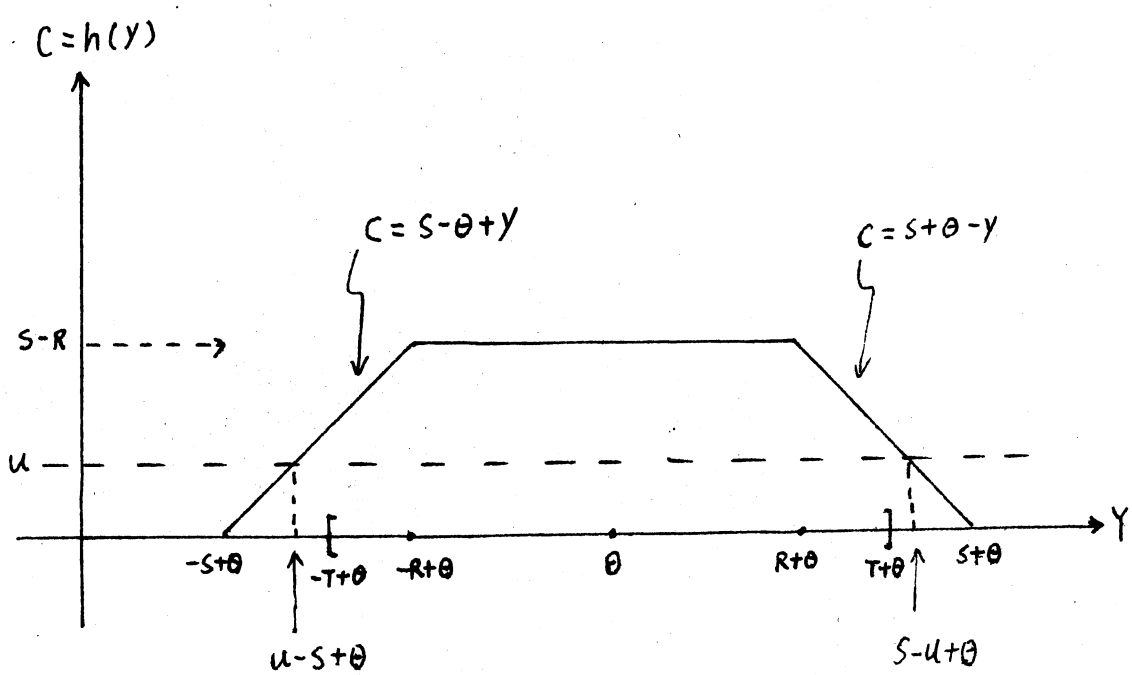

Figure 3. The Functional Relationship between C and Y

We note in Figure 3 that the maximum that the coverage C can attain is S-R, which is the minimum of 2T and 2P.

We can now obtain the c.d.f. of C by integrating f(y), which is defined in (2.1), over the proper intervals indicated in Figure 3, corresponding to various values of u. This yields the following c.d.f.:

$$F_C(u) = \begin{cases} 0 & \text{for} \quad u < 0 \\ G(u-S+\theta-\mu) + G(u-S-\theta+\mu) & \text{for} \quad 0 \leq u < S-R \\ 1 & \text{for} \quad u \geq S-R \end{cases} \qquad (2.3)$$

where $G(\cdot)$ is the cumulative standard normal distribution function, and u is a standardized value. Figure 4 is a plot of $F_C(u)$:

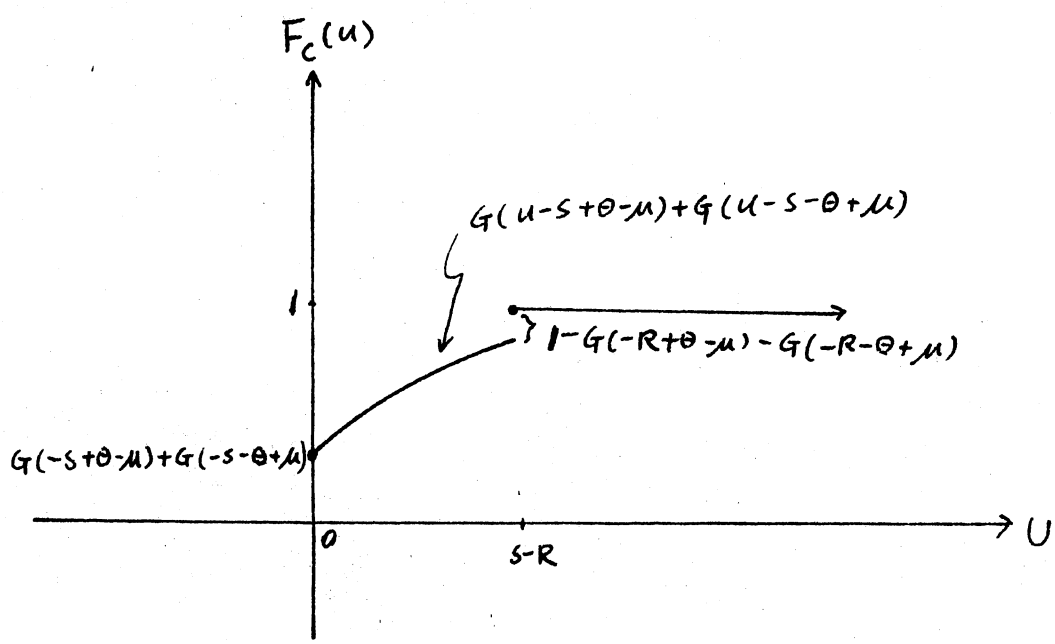

Figure 4. The c.d.f. of One Linear Coverage

The p.d.f. of C is then

$$f_C(u) = \begin{cases} 0 & \text{for } u < 0 \\ G(-S+\theta-\mu)+G(-S-\theta+\mu) & \text{for } u = 0 \\ g(u-S+\theta-\mu)+g(u-S-\theta+\mu) & \text{for } 0 < u < S-R \\ 1-G(-R+\theta-\mu)-G(-R-\theta+\mu) & \text{for } u = S-R \\ 0 & \text{for } u > S-R \end{cases} \tag{2.4}$$

where $g(\cdot)$ is the standard normal density function.

Figure 5 below is a graph of $f_C(u)$:

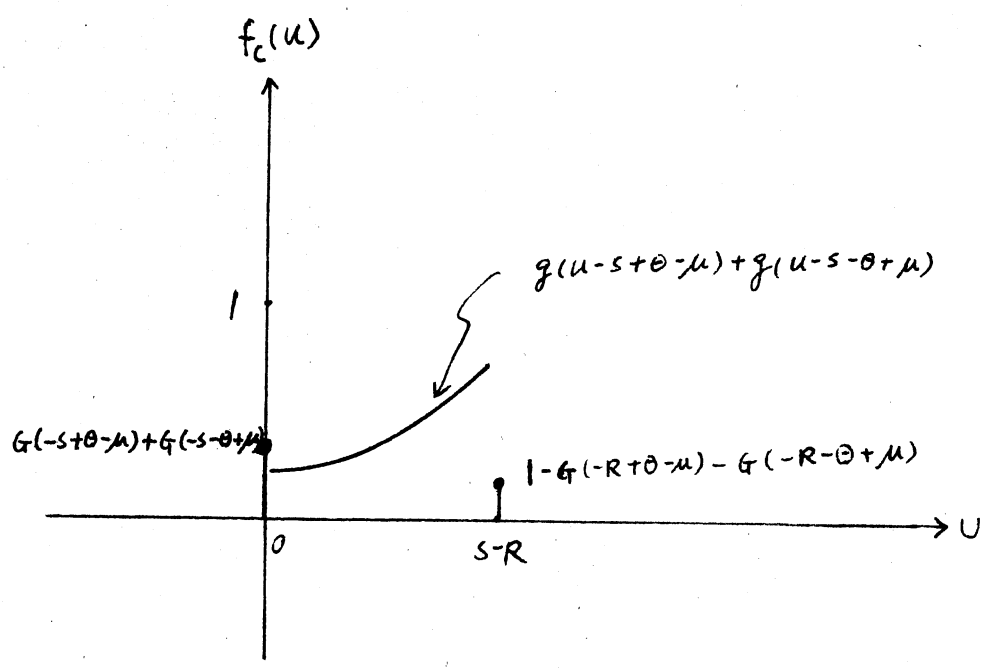

Figure 5. The p.d.f. of One Linear Coverage

To conclude, we have derived the c.d.f. and the p.d.f. of one linear coverage in Formulas (2.3) and (2.4). We note that this random variable is neither continuous nor discrete, but a mixture of both.

CHAPTER III

THE DISTRIBUTION OF ONE RECTANGULAR COVERAGE

In this chapter, we shall consider the distribution of one rectangular coverage instead of one linear coverage which was treated in Chapter II.

First we shall obtain the joint p.d.f. of C and C', the linear coverages in the range direction and the deflection direction respectively. Once the joint p.d.f. of C and C' is obtained, we can find the c.d.f. of the rectangular coverage Z, by noting the fact that $Z = C \cdot C'$ and accordingly using the so called "Distribution Function Method."* We now proceed to do exactly that.

If we consider the notation defined above, i.e., L_T, β, L_P, μ, etc. as being in the range direction, then expression (2.4) can be considered as the p.d.f. of C, the linear coverage in the range direction. Now if we use the same notation with a prime added to each of them to denote the same thing in the deflection direction, then the p.d.f. of C', the linear coverage in the deflection direction, can be similarly obtained as:

---

* See, for example, Ash (1970, p. 59)

$$f_{C'}(u') = \begin{cases} 0 & \text{for } u' < 0 \\ G(-S'+\theta'-\mu')+G(-S'-\theta'+\mu') & \text{for } u' = 0 \\ g(u'-S'+\theta'-\mu')+g(u'-S'-\theta'+\mu') & \text{for } 0 < u' < S'-R' \\ 1-G(-R'+\theta'-\mu')-G(-R'-\theta'+\mu') & \text{for } u' = S'-R' \\ 0 & \text{for } u' > S'-R'. \end{cases} \quad (3.1)$$

Now the joint p.d.f. of C and C' is simply the product of $f_C(u)$ and $f_{C'}(u')$. This is due to the fact that Y and Y' were assumed to be independent, that C is a function of Y only, and that C' is a function of Y' only. It is given as follows on next page:

$$
f_{C,C'}(u,u') = \begin{cases}
0 \text{ for } u < 0, \text{ or } u > S-R, \text{ or } u' < 0, \text{ or } u' > S'-R \\
[G(-S+\theta-\mu)+G(-S-\theta+\mu)]\cdot[G(-S'+\theta'-\mu')+G(-S'-\theta'+\mu')] \\
\quad \text{for } u = 0 \text{ and } u' = 0 \\
[G(-S+\theta-\mu)+G(-S-\theta+\mu)]\cdot[g(u'-S'+\theta'-\mu')+g(u'-S'-\theta'+\mu')] \\
\quad \text{for } u = 0 \text{ and } 0 < u' < S'-R' \\
[G(-S+\theta-\mu)+G(-S-\theta+\mu)]\cdot[1-G(-R'+\theta'-\mu')-G(-R'-\theta'+\mu')] \\
\quad \text{for } u = 0 \text{ and } u' = S'-R' \\
[g(u-S+\theta-\mu)+g(u-S-\theta+\mu)]\cdot[G(-S'+\theta'-\mu')+G(-S'-\theta'+\mu')] \\
\quad \text{for } 0 < u < S-R \text{ and } u' = 0 \\
[g(u-S+\theta-\mu)+g(u-S-\theta+\mu)]\cdot[g(u'-S'+\theta'-\mu')+g(u'-S'-\theta'+\mu')] \\
\quad \text{for } 0 < u < S-R \text{ and } 0 < u' < S'-R' \\
[g(u-S+\theta-\mu)+g(u-S-\theta+\mu)]\cdot[1-G(-R'+\theta'-\mu')-G(-R'-\theta'+\mu')] \\
\quad \text{for } 0 < u < S-R \text{ and } u = S'-R' \\
[1-G(-R+\theta-\mu)-G(-R-\theta+\mu)]\cdot[G(-S'+\theta'-\mu')+G(-S'-\theta'+\mu')] \\
\quad \text{for } u = S-R \text{ and } u' = 0 \\
[1-G(-R+\theta-\mu)-G(-R-\theta+\mu)]\cdot[g(u'-S'+\theta'-\mu')+g(u'-S'-\theta'+\mu')] \\
\quad \text{for } u = S-R \text{ and } 0 < u' < S'-R' \\
[1-G(-R+\theta-\mu)-G(-R-\theta+\mu)]\cdot[1-G(-R'+\theta'-\mu')-G(-R'-\theta'+\mu')] \\
\quad \text{for } u = S-R \text{ and } u' = S'-R'.
\end{cases}
\tag{3.2}
$$

Again this is an example of a "mixed" p.d.f. This means that the probability mass of this p.d.f. is concentrated on four <u>points</u>, <u>areas on four "walls"</u> and the <u>volume</u> in the middle. This is illustrated by the graph of $f_{C,C'}(u, u')$ in Figure 6:

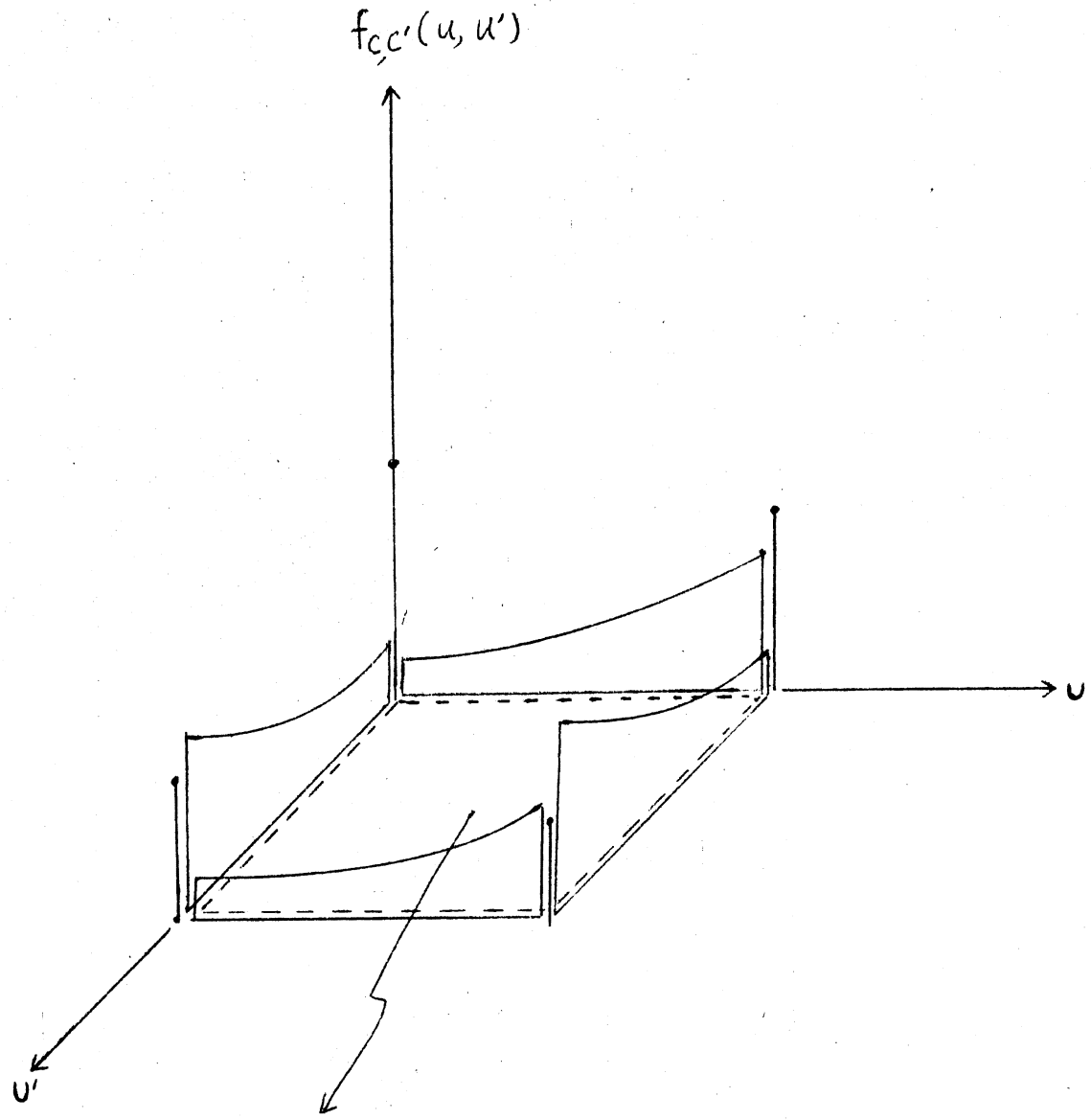

the surface of this open rectangle is:

$$[g(u-s+\theta-\mu)+g(u-s-\theta+\mu)]\cdot[g(u'-s'+\theta'-\mu')+g(u'-s'-\theta'+\mu')]$$

Figure 6. The Joint p.d.f. of Linear Coverages in Range and Deflection Directions

If we sum up the functional values of the four points (0, 0), (0, S'-R'), (S-R, 0), (S-R, S'-R'), and areas of the four "walls" whose base lines are $\{(u, u') | u = 0, 0 < u' < S'-R'\}$, $\{(u, u') | u = S-R, 0 < u' < S'-R'\}$, $\{(u, u') | 0 < u < S-R, u' = 0\}$, $\{(u, u') | 0 < u < S-R, u' = S'-R'\}$, and the volume whose base is $\{(u, u') | 0 < u < S-R, 0 < u' < S'-R'\}$ in the diagram on Figure 6, we shall get one, the whole probability mass of this joint p.d.f.

Once the joint p.d.f. of C and C' is obtained in (3.2), we can derive the c.d.f. of the rectangular coverage, $Z = C \cdot C'$, by using the "Distribution Function Method." In applying this method here we simply realize that $Pr(Z \leq v) = Pr(C \cdot C' \leq v)$ which can be found for any specified v value by first summing over the probability mass of the points, areas, and volume whose "base" is inside the lower right corner in Figure 7, and then to subtract this sum from one. (Note that the value v has been standardized.)

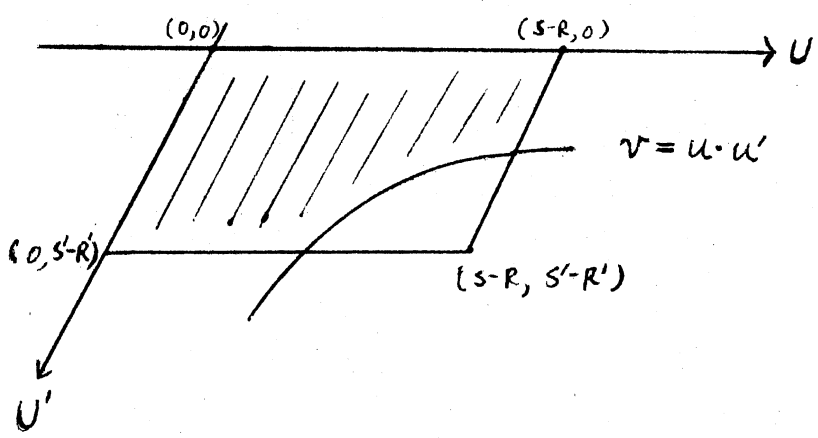

Figure 7. Using "Distribution Function Method" to Obtain the c.d.f. of the Rectangular Coverage

Now let us carry this out.

For $v < 0$, $\Pr(Z \leq v) = 0$.

For $v \geq (S-R)(S'-R')$, $\Pr(Z \leq v) = 1$.

For $0 \leq v < (S-R)(S'-R')$,

$\Pr(Z \leq v)$

$$= 1-\Big\{[1-G(-R+\theta-\mu)-G(-R-\theta+\mu)]\cdot[1-G(-R'+\theta'-\mu')-G(-R'-\theta'+\mu')]$$

$$+\int_{v/(S'-R')}^{S-R}[g(u-S+\theta-\mu)+g(u-S-\theta+\mu)]\cdot[1-G(-R'+\theta'-\mu')-G(-R'-\theta'+\mu')]du$$

$$+\int_{v/(S-R)}^{S'-R'}[1-G(-R+\theta-\mu)-G(-R-\theta+\mu)]\cdot[g(u'-S'+\theta'-\mu')+g(u'-S'-\theta'+\mu')]du'$$

$$+\int_{v/(S-R)}^{S'-R'}\int_{v/u'}^{S-R}[g(u-S+\theta-\mu)+g(u-S-\theta+\mu)]\cdot[g(u'-S'+\theta'-\mu')+g(u'-S'-\theta'+\mu')]du\,du'\Big\}$$

$$= 1-\Big\{[1-G(-R+\theta-\mu)-G(-R-\theta+\mu)]\cdot[1-G(-R'+\theta'-\mu')-G(-R'-\theta'+\mu')]$$

$$+[1-G(-R'+\theta'-\mu')-G(-R'-\theta'+\mu')]\cdot[G(-R+\theta-\mu)-G(v/(S'-R')-S+\theta-\mu)$$
$$+G(-R-\theta+\mu)-G(v/(S'-R')-S-\theta+\mu)]$$

$$+[1-G(-R+\theta-\mu)-G(-R-\theta+\mu)]\cdot[G(-R'+\theta'-\mu')-G(v/(S-R)-S'+\theta'-\mu')$$
$$+G[-R'-\theta'+\mu')-G(v/(S-R)-S'-\theta'+\mu')]$$

$$+[G(-R+\theta-\mu)+G(-R-\theta+\mu)]\cdot[G(-R'+\theta'-\mu')-G(v/(S-R)-S'+\theta'-\mu')$$
$$+G(-R'-\theta'+\mu')-G(v/(S-R)-S'-\theta'+\mu')]$$

$$-\int_{v/(S-R)}^{S'-R'}[g(u'-S'+\theta'-\mu')+g(u'-S'-\theta'+\mu')]\cdot[G(v/u'-S+\theta-\mu)+G(v/u'-S-\theta+\mu)]du'\Big\}$$

$$= [G(v/(S'-R')-S+\theta-\mu)+G(v/(S'-R')-S-\theta+\mu)]\cdot[1-G(-R'+\theta'-\mu')-G(-R'-\theta'+\mu')]$$

$$+ G(v/(S-R)-S'+\theta'-\mu')+G(v/(S-R)-S'-\theta'+\mu')$$

$$+ \int_{v/(S-R)}^{S'-R'} [g(u'-S'+\theta'-\mu')+g(u'-S'-\theta'+\mu')]\cdot[G(v/u'-S+\theta-\mu)+G(v/u'-S-\theta+\mu)]du'$$

To summarize, we have the following c.d.f. of the rectangular coverage, Z:

$$F_Z(v) = \begin{cases} 0 & \text{for } v < 0 \\ [G(v/(S'-R')-S+\theta-\mu)+G(v/(S'-R')-S-\theta+\mu)]\cdot & \\ \quad [1-G(-R'+\theta'-\mu')-G(-R'-\theta'+\mu')] & \\ +G(v/(S-R)-S'+\theta'-\mu')+G(v/(S-R)-S'-\theta'+\mu') & \\ + \int_{v/(S-R)}^{S'-R'} [g(u'-S'+\theta'-\mu')+g(u'-S'-\theta'+\mu')]\cdot & \\ \qquad [G(v/u'-S+\theta-\mu)+G(v/u'-S-\theta+\mu)]du' & \\ & \text{for } 0 \le v < (S-R)(S'-R') \\ 1 & \text{for } v \ge (S-R)(S'-R'). \end{cases} \tag{3.3}$$

We must give a warning immediately. When $v = 0$, the term v/u' in expression (3.3) must be defined to be 0. Otherwise, v/u' is undefined at the lower limit of the integration when $v = 0$.

The approach we used here to derive $F_Z(v)$ in (3.3) is entirely different from that used by Gay and Weeks (1973). It is interesting to note that when we assume the target center $(\theta, \theta') = (0, 0)$ and the aimpoint $(\mu, \mu') = (0, 0)$, expression (3.3) will reduce to expression (3.4) below, which is equivalent to the c.d.f. found in Gay and Weeks (1973, pp. 20-21) except that we have a more compact and unified form here, i.e.,

$$F_Z(v) = \begin{cases} 0 & \text{for } v < 0 \\ [2G(v/(S'-R')-S)]\cdot[1-2G(-R')]+2G(v/(S-R)-S') & \\ +\displaystyle\int_{v/(S-R)}^{S'-R'} 4g(u'-S')\ G(v/u'-S)du' & \text{for } 0 \le v < (S-R)(S'-R') \\ 1 & \text{for } v \ge (S-R)(S'-R'). \end{cases} \tag{3.4}$$

The p.d.f. of Z, the rectangular coverage, is derived by taking derivatives of (3.3) and taking account of the "jumps" at $v=0$ and $v = (S-R)(S'-R')$. Leibnitz Rule is used in this differentiation. After simplification, we obtain:

$$F_Z(v) = \begin{cases} 0 & \text{for } v < 0 \text{ or } v > (S-R)(S'-R') \\ [G(-S+\theta-\mu)+G(-S-\theta+\mu)]+[G(-S'+\theta'-\mu')+G(-S'-\theta'+\mu')] & \\ -[G(-S+\theta-\mu)+G(-S-\theta+\mu)]\cdot[G(-S'+\theta'-\mu')+G(-S'-\theta'+\mu')] & \\ & \text{for } v = 0 \\ [1-G(-R'+\theta'-\mu')-G(-R'-\theta'+\mu')]\cdot[g(v/(S'-R')-S+\theta-\mu) & \\ \quad +g(v/(S'-R')-S-\theta+\mu)]\cdot[1/(S'-R')]+ & \\ [1-G(-R+\theta-\mu)-G(-R-\theta+\mu)]\cdot[g(v/(S-R)-S'+\theta'-\mu') & \\ \quad +g(v/(S-R)-S'-\theta'+\mu')]\cdot[1/(S-R)]+ & \\ \displaystyle\int_{v/(S-R)}^{S'-R'} [g(u'-S'+\theta'-\mu')+g(u'-S'-\theta'+\mu')]\cdot[g(v/u'-S+\theta-\mu) & \\ \quad +g(v/u'-S-\theta+\mu)](1/u')du' & \\ & \text{for } 0 < v < (S-R)(S'-R') \\ [1-G(-R+\theta-\mu)-G(-R-\theta+\mu)]\cdot[1-G(-R'+\theta'-\mu')-G(-R'-\theta'+\mu') & \\ & \text{for } v = (S-R)(S'-R'). \end{cases} \tag{3.5}$$

A graph of $f_Z(v)$ is as given in Figure 8.

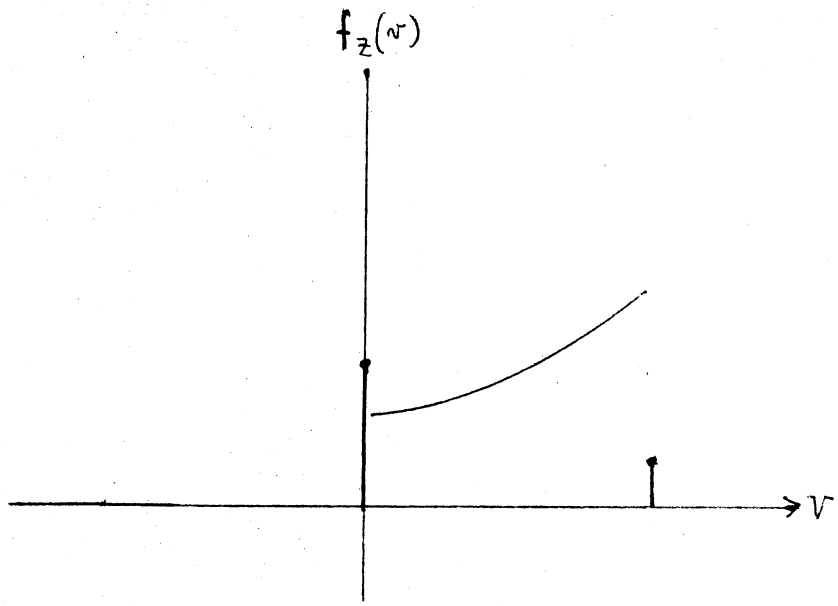

Figure 8. The p.d.f. of One Rectangular Coverage

In this chapter, we have derived both the c.d.f. and the p.d.f. of one rectangular coverage. In the next two chapters we shall develop the <u>joint</u> distribution, i.e., the joint c.d.f. and the joint p.d.f. of two linear coverages.

CHAPTER IV

THE JOINT C.D.F. OF TWO LINEAR COVERAGES AND ITS EXTENSION

1. The Joint c.d.f. of Two Linear Coverages

We shall make use of the same notation defined in Chapter II with subscript "1" or "2" added to L_T, β, T, θ, S, and R to differentiate between Target 1 and Target 2.

Suppose we have two linear targets. Target 1 has length $2T_1$ with center at $\theta_1=2$. Target 2 has length $2T_2$ with center at θ_2. (Let us adopt the convention that we always denote the target on the left as Target 1 and assign zero as the coordinate of its center). A linear pattern of length 2P aimed at point μ is delivered on them. The distribution of Y, the landing point of the pattern center is assumed to be normal $(\mu, 1)$ as before.

The linear coverage of Target 1, C_1, is again a function of Y. So is C_2, the linear coverage of Target 2. That is:

$$C_1=h_1(y) = \begin{cases} 0 & \text{for} \quad y \le -S_1 \\ S_1+y & \text{for} \quad -S_1 < y < -R_1 \\ S_1-R_1 & \text{for} \quad -R_1 \le y \le R_1 \\ S_1-y & \text{for} \quad R_1 < y < S_1 \\ 0 & \text{for} \quad y \ge S_1 \end{cases} \tag{4.1}$$

and

$$C_2=h_2(y) = \begin{cases} 0 & \text{for } y \le -S_2+\theta_2 \\ S_2-\theta_2+y & \text{for } -S_2+\theta_2 < y < -R_2+\theta_2 \\ S_2-R_2 & \text{for } -R_2+\theta_2 \le y \le R_2+\theta_2 \\ S_2+\theta_2-y & \text{for } R_2+\theta_2 < y < S_2+\theta_2 \\ 0 & \text{for } y \ge S+\theta_2. \end{cases} \tag{4.2}$$

These two functions, (4.1) and (4.2), can be graphed on the same axis. One possible configuration of targets and pattern is shown on the diagram in Figure 9. We note again the maximum that the coverage C_1 can attain is

$$S_1-R_1 = \min(2T_1, 2P),$$

and the maximum that the coverage C_2 can attain is

$$S_2-R_2 = \min(2T_2, 2P).$$

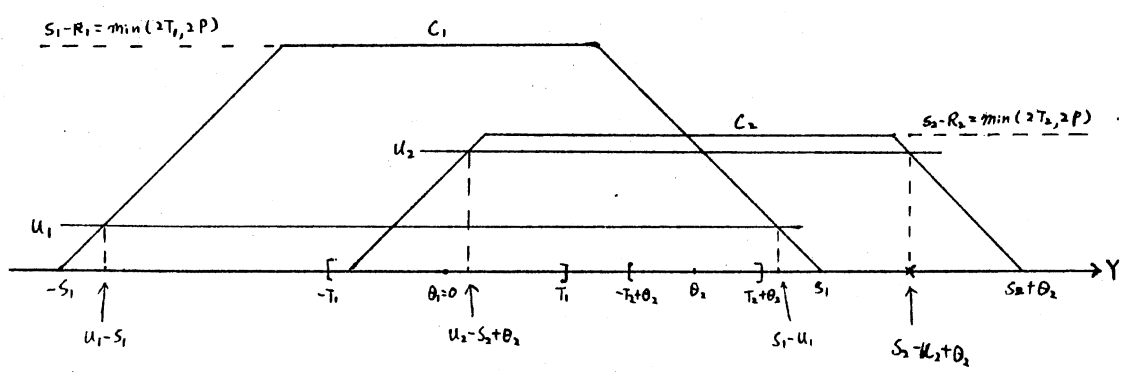

Figure 9. The Functional Relationship between C_1, C_2, and Y

Now let us proceed to find the joint c.d.f. of C_1 and C_2, namely, $F_{C_1,C_2}(u_1, u_2) = \Pr(C_1 \leq u_1, C_2 \leq u_2)$. Since $\Pr(C_1 \leq u_1, C_2 \leq u_2)$ will have different expressions, corresponding to the possible values u_1 and u_2 may assume, we first break the U_1U_2 plane into five disjoint regions:

(1) $u_1 < 0$ or $u_2 < 0$

(2) $u_1 \geq S_1 - R_1$ and $u_2 \geq S_2 - R_2$

(3) $u_1 \geq S_1 - R_1$ and $0 \leq u_2 < S_2 - R_2$

(4) $0 \leq u_1 < S_1 - R_1$ and $u_2 \geq S_2 - R_2$

(5) $0 \leq u_1 < S_1 - R_1$ and $0 \leq u_2 < S_2 - R_2$. (4.3)

We can find the $\Pr(C_1 \leq u_1, C_2 \leq u_2)$ region by region as follows:

For Region (1): $u_1 < 0$ or $u_2 < 0$,

$\Pr(C_1 \leq u_1, C_2 \leq u_2) = 0$

since coverages are non-negative.

For Region (2): $u_1 \geq S_1-R_1$ and $u_2 \geq S_2-R_2$,

$\Pr(C_1 \leq \mu_1, C_2 \leq u_2) = 1$

since (S_1-R_1) and (S_2-R_2) are the maxima of C_1 and C_2 respectively.

For Region (3): $u_1 \geq S_1-R_1$ and $0 \leq u_2 < S_2-R_2$,

$$\Pr(C_1 \leq u_1, C_2 \leq u_2) = \Pr(C_2 \leq u_2) = 1-\Pr(C_2 > u_2)$$

$$= 1 - \int_{u_2-S_2+\theta_2}^{S_2-u_2+\theta_2} g(y-\mu)dy$$

$$= 1-[G(S_2-u_2+\theta_2-\mu)-G(u_2-S_2+\theta_2-\mu)].$$

For Region (4): $0 \leq u_1 < S_1-R_1$ and $u_2 \geq S_2-R_2$,

$$\Pr(C_1 \leq u_1, C_2 \leq u_2) = \Pr(C_1 \leq u_1) = 1-\Pr(C_1 > u_1)$$

$$= 1 - \int_{u_1-S_1}^{S_1-u_1} g(y-\mu)dy$$

$$= 1-[G(S_1-u_1-\mu)-G(u_1-S_1-\mu)].$$

For Region (5): $0 \leq u_1 < S_1-R_1$ and $0 \leq u_2 < S_2-R_2$, we have more than one case to consider. Before we consider the possible cases, let us first adopt the following notation:

Let $A_1 = u_1-S_1$ (the "rear foot" of C_1 curve)

$B_1 = S_1-u_1$ (the "front foot" of C_1 curve)

$A_2 = u_2-S_2+\theta_2$ (the "rear foot" of C_2 curve)

$B_2 = S_2-u_2+\theta_2$ (the "front foot" of C_2 curve). (4.4)

Since S_1-u_1 and S_2-u_2 are positive numbers, we have the relationship that $A_1 < B_1$ and $A_2 < B_2$.

With these two restrictions, there are six possible arrangements of these four values in Region (5):

Case 1: $A_1 \leq A_2 < B_1 \leq B_2$

Case 2: $A_1 < B_1 \leq A_2 < B_2$

Case 3: $A_2 \leq A_1 < B_2 \leq B_1$

Case 4: $A_2 < B_2 \leq A_1 < B_1$

Case 5: $A_1 \leq A_2 < B_2 \leq B_1$

Case 6: $A_2 \leq A_1 < B_1 \leq B_2$. (4.4a)

To prove that some of the above cases are impossible cases, we need the following lemmas:

Lemma 1: It is impossible that $A_2 \leq A_1$.

Proof: Suppose $A_2 \leq A_1$. By definition, we have

$u_2 - S_2 + \theta_2 \leq u_1 - S_1$, which implies

$-S_2 + \theta_2 < (S_1 - R_1) - S_1$ since $0 \leq u_1 < S_1 - R_1$ and

$0 \leq u_2 < S_2 - R_2$.

This implies

$-T_2 - P + T_1 + T_2 < -|T_1 - P|$ since $\theta_2 \geq T_1 + T_2$.

Hence,

$T_1 - P < -|T_1 - P|$, which is impossible.

Thus, we have proved Lemma 1 by contradiction.

Lemma 2: It is impossible that $B_2 \leq B_1$.

Proof: Suppose $B_2 \leq B_1$. By definition, we have

$S_2 - u_2 + \theta_2 \leq S_1 - u_1$, which implies

$S_2 - (S_2 - R_2) + \theta_2 < S_1$ $\quad 0 \leq u_1 < S_1 - R_1$ and

$0 \leq u_2 < S_2 - R_2$.

This implies

$|T_2 - P| + T_1 + T_2 < T_1 + P$ since $\theta_2 \geq T_1 + T_2$.

Hence,

$|T_2 - P| < P - T_2$

that is

$|P - T_2| < P - T_2$, which is impossible.

Again, we have proved Lemma 2 by contradiction.

Therefore, we can rule out Case 3, Case 4, and Case 6 by Lemma 1; and Case 5 by Lemma 2. There are only Cases 1 and 2 left as possible. Furthermore, we note from Figure 9 that the problem of finding $\Pr(C_1 \leq u_1, C_2 \leq u_2)$ is really a problem of finding $\Pr[y \notin (A_1, B_1) \cup (A_2, B_2)]$, which in turn can be solved by finding $1 - \Pr[y \in (A_1, B_1) \cup (A_2, B_2)]$.

We proceed now to find $Pr(C_1 \le u_1, C_2 \le u_2)$ in Region (5): Under Case 1, the union of (A_1, B_1) and (A_2, B_2) is (A_1, B_2), i.e., $(u_1-S_1, S_2-u_2+\theta_2)$. Hence

$$Pr(C_1 \le u_1, C_2 \le u_2) = 1-[G(S_2-u_2+\theta_2-\mu)-G(u_1-S_1-\mu)]$$

and under Case 2, (A_1, B_1) and (A_2, B_2) are disjoint, the union of them is then (u_1-S_1, S_1-u_1) and $(u_2-S_2+\theta_2, S_2-u_2+\theta_2)$. Hence

$$P_2(C_1 \le u_1, C_2 \le u_2) - 1-[G(S_1-u_1-\mu)-G(u_1-S_1-\mu)+G(S_2-u_2+\theta_2-\mu) -G(u_2-S_2+\theta_2-\mu)].$$

To summarize, we have the following c.d.f. of C_1 and C_2, the linear coverages of Target 1 and Target 2, when a linear pattern is delivered on them:

$$F_{C_1, C_2}(u_1, u_2) = Pr(C_1 \le u_1, C_2 \le u_2)$$

$$= \begin{cases} 0 & \text{for } u_1 < 0 \text{ or } u_2 < 0 \quad \text{(Region (1))} \\ 1 & \text{for } u_1 \ge S_1-R_1 \text{ and } u_2 \ge S_2-R_2 \quad \text{(Region (2))} \\ 1-G(S_2-u_2+\theta_2-\mu)+G(u_2-S_2+\theta_2-\mu) & \\ & \text{for } u_1 \ge S_1-R_1 \text{ and } 0 \le u_2 < S_2-R_2 \quad \text{(Region (3))} \\ 1-G(S_1-u_1-\mu)+G(u_1-S_1-\mu) & \\ & \text{for } 0 < u_1 < S_1-R_1 \text{ and } u_2 \ge S_2-R_2 \quad \text{(Region (4))} \\ 1-G(S_2-u_2+\theta_2-\mu)+G(u_1-S_1-\mu) & \\ & \text{for } 0 \le u_1 < S_1-R_1 \text{ and } 0 \le u_2 < S_2-R_2 \\ & \text{and } A_1 \le A_2 < B_1 \le B_2 \quad \text{(Region (5), Case 1)} \\ 1-G(S_1-u_1-\mu)+G(u_1-S_1-\mu)-G(S_2-u_2+\theta_2-\mu)+G(u_2-S_2+\theta_2-\mu) & \\ & \text{for } 0 \le u_1 < S_1-R_1 \text{ and } 0 \le u_2 < S_2-R_2 \\ & \text{and } A_1 < B_1 \le A_2 < B_2 \quad \text{(Region (5), Case 2)} \end{cases} \tag{4.5}$$

where A_1, B_1, A_2, and B_2 are defined in (4.4).

Therefore, $F(u_1, u_2)$ assumes the same form in Regions 1, 2, 3 and 4; but in Region 5, it may assume different forms depending on the ordering of the values of A_1, B_1, A_2, and B_2.

Because of the different expressions in Region (5), this distribution function of two linear coverages is not easy to graph. In Figure 10, the diagram is given for the special case exemplified by the diagram in Figure 9, where the order of arrangement is always $A_1 \leq A_2 < B_1 \leq B_2$ (Case 1) when (u_1, u_2) is in Region (5).

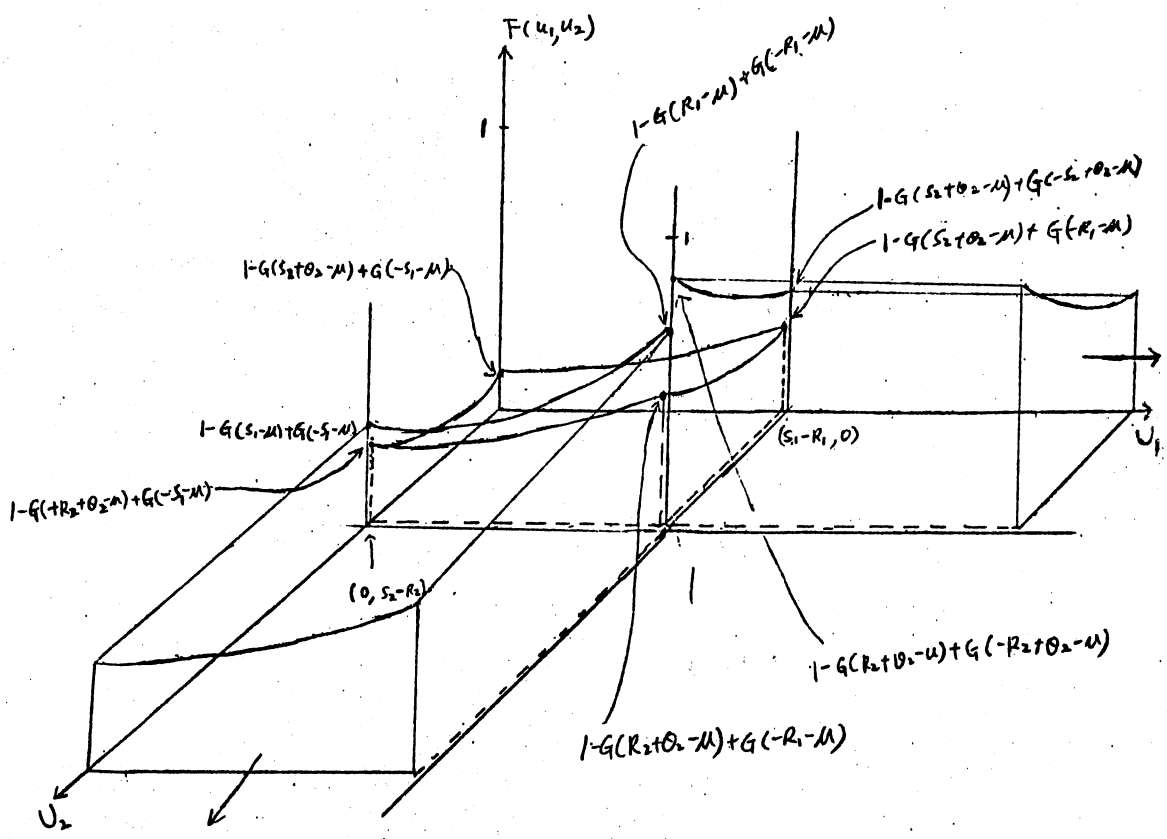

Figure 10. A Distribution Function of Two Linear Coverages

2. Some Extensions

In practice, when a linear pattern is delivered on two linear targets, a more interesting question is: "What is the joint probability of covering Target 1 at least u_1 and covering Target 2 at least u_2?" That is $Pr(C_1 \geq u_1, C_2 \geq u_2)$. This question can be answered by finding $Pr\{y \varepsilon [A_1, B_1] \cap [A_2, B_2]\}$ in Figure 9. Expression (4.6) below answers this question for different (u_1, u_2) values:

$$Pr(C_1 \geq u_1, C_2 \geq u_2) = \begin{cases} 0 & \text{for } u_1 > S_1-R_1 \text{ or } u_2 > S_2-R_2 \\ 1 & \text{for } u_1 \leq 0 \text{ and } u_2 \leq 0 \\ G(S_2-u_2+\theta_2-\mu)-G(u_2-S_2+\theta_2-\mu) & \\ & \text{for } u_1 \leq 0 \text{ and } 0 < u_2 \leq S_2-R_2 \\ G(S_1-u_1-\mu)-G(u_1-S_1-\mu) & \\ & \text{for } 0 < u_1 \leq S_1-R_1 \text{ and } u_2 \leq 0 \\ G(S_1-u_1-\mu)-G(u_2-S_2+\theta_2-\mu) & \\ & \text{for } 0 < u_1 \leq S_1-R_1 \text{ and } 0 < u_2 \leq S_1-R_1 \\ & \text{and } A_1 \leq A_2 < B_1 \leq B_2 \\ 0 & \text{for } 0 < u_1 \leq S_1-R_1 \text{ and } 0 < u_2 \leq S_1-R_1 \\ & \text{and } A_1 < B_1 \leq A_2 < B_2 . \end{cases} \tag{4.6}$$

Furthermore, we can answer this question for any number of linear targets. Suppose, for example, we have four linear targets with a linear pattern delivered on them, then

$$Pr(C_1 \geq u_1, C_2 \geq u_2, C_3 \geq u_3, C_4 \geq u_4) = Pr(C_1 \geq u_1, C_4 \geq u_4)$$

provided that $u_1 > 0$ and $u_4 > 0$, and $u_2 \leq 2T_2$ and $u_3 \leq 2T_3$. These restrictions appear to be reasonable ones. The reason that we can ignore the statements about C_2 and C_3 in the above is that once the statements about C_1 and C_4 are satisfied, Target 2 and Target 3 must be covered completely, which means the statements about C_2 and C_3 are automatically satisfied.

In general, we have

$$\Pr(C_1 \geq u_1, C_2 \geq u_2, \ldots, C_n \geq u_n) = \Pr(C_1 \geq u_1, C_n \geq u_n)$$

provided that $u_1 > 0$ and $u_n > 0$, and $u_i \leq 2T_i$ for $i = 2, 3, \ldots n-1$.

Once we reduce the problem of n linear coverages to a problem of two linear coverages, we can find the joint probability according to expression (4.6).

In next chapter, we shall derive the joint p.d.f. of two linear coverages from the c.d.f. of two linear coverages obtained in this chapter.

CHAPTER V

THE JOINT P.D.F. OF TWO LINEAR COVERAGES

We first realize that the p.d.f. of two linear coverages is neither continous nor discrete, but a mixture of them. There are four points which have positive probabilities. They are the points (0, 0) $(0, S_2-R_2)$, $(S_1-R_1, 0)$, and (S_1-R_1, S_2-R_2). The probabilties of these four points can be found as follows:

$$\begin{aligned}
&Pr(u_1=0, u_2=0) \\
&\quad = Pr(u_1 \leq 0, u_2 \leq 0)-Pr(u_1 \leq 0, u_2 < 0)-Pr(u_1 < 0, u_2 \leq 0) \\
&\qquad +Pr(u_1 < 0, u_2 < 0) \\
&\quad = F(0, 0)-F(0, 0^-)-F(0^-, 0)+F(0^-, 0^-)
\end{aligned}$$

where $F(0, 0^-) = \lim_{\ell \to 0^-} F(0, \ell)$

$F(0^-, 0) = \lim_{\ell \to 0^-} F(\ell, 0)$

$F(0^-, 0^-) = \lim_{\substack{\ell \to 0^- \\ k \to 0^-}} F(\ell, k)$.

According to (4.5),

$F(0,0) = 1-G(S_2+\theta_2-\mu)+G(-S_1-\mu)$; for $-S_1 \leq -S_2+\theta_2 < S_1 \leq S_2+\theta_2$

or

$F(0, 0) = 1-G(S_1-\mu)+G(-S_1-\mu)-G(S_2+\theta_2-\mu)+G(-S_2+\theta_2-\mu)$,

for $-S_1 < S_1 \leq -S_2+\theta_2 < S_2+\theta_2$.

Hence,

$Pr(u_1=0,\ u_2=0)$

$$= [1-G(S_2+\theta_2-\mu)+G(-S_1-\mu)]-0-0+0 = 1-G(S_2+\theta_2-\mu)+G(-S_1-\mu)$$

$$\text{for} \quad -S_1 \leq -S_2+\theta_2 < S_1 \leq S_2+\theta_2,$$

or

$$= 1-G(S_1-\mu)+G(-S_1-\mu)-G(S_2+\theta_2-\mu)+G(-S_2+\theta_2-\mu)$$

$$\text{for} \quad -S_1 < S_1 \leq -S_2+\theta_2 < S_2+\theta_2. \tag{5.1}$$

$Pr(u_1=0,\ u_2=S_2-R_2)$

$$= Pr(u_1 \leq 0,\ u_2 \leq S_2-R_2)-Pr(u_1 \leq 0,\ u_2 < S_2-R_2)-Pr(u_1 < 0,\ u_2 \leq S_2-R_2)$$
$$+ Pr(u_1 < 0,\ u_2 < S_2-R_2)$$
$$= F(0,\ S_2-R_2)-F(0,\ S_2-R_2^-)-F(0^-,\ S_2-R_2)+F(0^-,\ S_2-R_2^-)$$

where, according to (4.5),

$$F(0,\ S_2-R_2^-) = 1-G(R_2+\theta_2-\mu)+G(-S_1-\mu) \quad \text{for} \quad -S_1 \leq -R_2+\theta_2 < S_1 \leq R_2+\theta_2,$$

or

$$F(0,\ S_2-R_2^-) = 1-G(S_1-\mu)+G(-S_1-\mu)-G(R_2+\theta_2-\mu)+G(-R_2+\theta_2-\mu)$$

$$\text{for} \quad -S_1 < S_1 \leq -R_2+\theta_2 < R_2+\theta_2.$$

Hence,

$Pr(u_1=0,\ u_2=S_2-R_2)$

$$= [1-G(S_1-\mu)+G(-S_1-\mu)]-[1-G(R_2+\theta_2-\mu)+G(-S_1-\mu)]-0+0$$
$$= G(R_2+\theta_2-\mu)-G(S_1-\mu) \qquad \text{for} \quad -S_1 \leq -R_2+\theta_2 < S_1 \leq R_2+\theta_2,$$

or

$$= [1-G(S_1-\mu)+G(-S_1-\mu)]-[1-G(S_1-\mu)+G(-S_1-\mu)-G(R_2+\theta_2-\mu)+G(-R_2+\theta_2-\mu)]$$
$$= G(R_2+\theta_2-\mu)-G(-R_2+\theta_2-\mu), \qquad \text{for} \quad -S_1 < S_1 \leq -R_2+\theta_2 < R_2+\theta_2. \tag{5.2}$$

$Pr(u_1=S_1-R_1,\ u_2=0)$

$$= Pr(u_1 \le S_1-R_1,\ u_2 \le 0) - Pr(u_1 \le S_1-R_1,\ u_2 < 0)$$
$$-Pr(u_1 < S_1-R_1,\ u_2 \le 0) + Pr(u_1 < S_1-R_1,\ u_2 < 0)$$
$$= F(S_1-R_1,\ 0)-F(S_1-R_1,\ 0^-)-F(S_1-R_1^-,\ 0)+F(S_1-R_1^-,\ 0^-)$$

where, according to (4.5),

$$F(S_1-R_1^-,\ 0) = 1-G(S_2+\theta_2-\mu)+G(-R_1-\mu) \quad \text{for} \quad -R_1 \le -S_2+\theta_2 < R_1 \le S_2+\theta_2,$$

or

$$F(S_1-R_1^-,\ 0) = 1-G(R_1-\mu)+G(-R_1-\mu)-G(S_2+\theta_2-\mu)+G(-S_2+\theta_2-\mu)$$
$$\text{for} \quad -R_1 < R_1 \le -S_2+\theta_2 < S_2+\theta_2.$$

Hence,

$Pr(u_1=S_1-R_1,\ u_2=0)$

$$= [1-G(S_2+\theta_2-\mu)+G(-S_2+\theta_2-\mu)]-0-[1-G(S_2+\theta_2-\mu)+G(-R_1-\mu)]+0$$
$$= G(-S_2+\theta_2-\mu)-G(-R_1-\mu) \quad \text{for} \quad -R_1 \le -S_2+\theta_2 < R_1 \le S_2+\theta_2,$$

or

$$= [1-G(S_2+\theta_2-\mu)+G(-S_2+\theta_2-\mu)]-[1-G(R_1-\mu)+G(-R_1-\mu)-G(S_2+\theta_2-\mu)+G(-S_2+\theta_2-\mu)]$$
$$= G(R_1-\mu)+G(-R_1-\mu) \quad \text{for} \quad -R_1 < R_1 \le -S_2+\theta_2 < S_2+\theta_2. \tag{5.3}$$

Finally,

$Pr(u_1=S_1-R_1,\ u_2=S_2-R_2)$

$$= Pr(u_1 \le S_1-R_1,\ u_2 \le S_2-R_2)-Pr(u_1 \le S_1-R_1,\ u_2 < S_2-R_2)$$
$$-Pr(u_1 < S_1-R_1,\ u_2 \le S_2-R_2)+Pr(u_1 < S_1-R_1,\ u_2 < S_2-R_2)$$
$$= F(S_1-R_1,\ S_2-R_2)-F(S_1-R_1,\ S_2-R_2^-)-F(S_1-R_1^-,\ S_2-R_2)+F(S_1-R_1^-,\ S_2-R_2^-)$$

where, according to (4.5),

$$F(S_1-R_1^-,\ S_2-R_2^-) = 1-G(R_2+\theta_2-\mu)+G(-R_1-\mu)$$
$$\text{for} \quad -R_1 \le -R_2+\theta_2 < R_1 \le R_2+\theta_2,$$

or

$$F(S_1-R_1^-,\ S_2-R_2^-) = 1-G(R_1-\mu)+G(-R_1-\mu)-G(R_2+\theta_2-\mu)+G(-R_2+\theta_2-\mu)$$
$$\text{for } -R_1 < R_1 \leq -R_2+\theta_2 < R_2+\theta_2.$$

Hence,

$$\begin{aligned}
&\Pr(u_1=S_1-R_1,\ u_2=S_2-R_2) \\
&\quad = 1-[1-G(R_2+\theta_2-\mu)+G(-R_2+\theta_2-\mu)]-[1-G(R_1-\mu)+G(-R_1-\mu)] \\
&\qquad +[1-G(R_2+\theta_2-\mu)+G(-R_1-\mu)] \\
&\quad = G(R_1-\mu)-G(-R_2+\theta_2-\mu) \quad \text{for } -R_1 \leq -R_2+\theta_2 < R_1 \leq R_2+\theta_2, \\
&\quad \text{or} \\
&\quad = 1-[1-G(R_2+\theta_2-\mu)+G(-R_2+\theta_2-\mu)]-[1-G(R_1-\mu)+G(-R_1-\mu)] \\
&\qquad +[1-G(R_1-\mu)+G(-R_1-\mu)-G(R_2+\theta_2-\mu)+G(-R_2+\theta_2-\mu)] \\
&\quad = 0 \qquad \text{for } -R_1 < R_1 \leq -R_2+\theta_2 < R_2+\theta_2.
\end{aligned} \tag{5.4}$$

Besides these four points, whose probabilities were obtained in (5.1), (5.2), (5.3), and (5.4) above, the remaining probability is concentrated on four open intervals:

$$\{(u_1,\ u_2)\,|\,u_1=0,\ 0 < u_2 < S_2-R_2\}$$
$$\{(u_1,\ u_2)\,|\,0 < u_1 < S_1-R_1,\ u_2=0\}$$
$$\{(u_1,\ u_2)\,|\,u_1=S_1-R_1,\ 0 < u_2 < S_2-R_2\}$$
$$\{(u_1,\ u_2)\,|\,0 < u_1 < S_1-R_1,\ u_2=S_2-R_2\}.$$

The probability mass concentration on these four open intervals can be obtained by following a similar argument by which we obtained expressions (5.1), (5.2), (5.3), and (5.4). We decline to do it because of the following reasons: Firstly, for each open interval, we shall have three alternative expression depending on the order of arrangement of A_1, A_2,

B_1, and B_2. Secondly, these probabilities are not essential in deriving the joint p.d.f. of two linear coverages.

Apart from these four points and four open interval, the remaining portion of the U_1U_2 plane contributes no probability to the joint distribution function $F(u_1, u_2)$. In other words, the joint p.d.f. for the remaining portion is 0. This can be shown by taking derivatives twice on $F(u_1, u_2)$ with respect to u_1 first and then with respect to u_2.

Since this distribution function is a mixture of continuous and discret distributions, the values of the function $F(u_1, u_2)$ come from the p.d.f., $f(u_1, u_2)$, by summing over (1) the probabilities of the points which have positive values and belong to the region $\{(x, y) | x \leq u_1, y \leq u_2\}$; and (2) the areas of the "walls" whose "base lines" belong to the region $\{(x, y) | x \leq u_1, y \leq u_2\}$. There are four walls built around the rectangle $\{(x, y) | 0 \leq x \leq S_1-R_1, 0 \leq y \leq S_2-R_2\}$. The value of $F(u_1, u_2)$ on these four base lines (open intervals) are obtained from (4.5) to be:

$$F(u_1, u_2)$$

$$= \begin{cases} 1-G(S_2-u_2+\theta_2-\mu)+G(-S_1-\mu) \\ \quad \text{for } u_1=0,\ 0 < u_2 < S_2-R_2 \text{ and } -S_1 \leq u_2-S_2+\theta_2 < S_1 \leq S_2-u_2+\theta_2 \\ 1-G(S_1-\mu)+G(-S_1-\mu)-G(S_2-u_2+\theta_2-\mu)+G(u_2-S_2+\theta_2-\mu) \\ \quad \text{for } u_1=0,\ 0 < u_2 < S_2-R_2 \text{ and } -S_1 < S_1 \leq u_2-S_2+\theta_2 < S_2-u_2+\theta_2 \\ 1-G(S_2+\theta_2-\mu)+G(u_1-S_1-\mu) \\ \quad \text{for } 0 < u_1 < S_1-R_1, u_2=0 \text{ and } u_1-S_1 \leq -S_2+\theta_2 < S_1-u_1 \leq S_2+\theta_2 \\ 1-G(S_1-u_1-\mu)+G(u_1-S_1-\mu)-G(S_2+\theta_2-\mu)+G(-S_2+\theta_2-\mu) \\ \quad \text{for } 0 < u_1 < S_1-R_1,\ u_2=0 \text{ and } u_1-S_1 < S_1-u_1 \leq -S_2+\theta_2 < S_2+\theta_2 \\ 1-G(S_2-u_2+\theta_2-\mu)+G(u_2-S_2+\theta_2-\mu) \\ \quad \text{for } u_1=S_1-R_1,\ 0 < u_2 < S_2-R_2 \\ 1-G(S_1-u_1-\mu)+G(u_1-S_1-\mu) \\ \quad \text{for } 0 < u_1 < S_1-R_1,\ u_2=S_2-R_2. \end{cases} \tag{5.5}$$

We can now proceed to derive the p.d.f. of (C_1, C_2), $f(u_1, u_2)$. As we have indicated before, all the probability mass is concentrated on the four points and four open intervals. The values of $f(u_1, u_2)$ on the four points have been obtained in (5.1), (5.2), (5.3), and (5.4). What follows will give us the values of $f(u_1, u_2)$ on the four open intervals.

The value of $f(u_1, u_2)$ in the open interval $u_1=0,\ 0 < u_2 < S_2-R_2$ can be obtained by directly taking the derivative of $F(u_1, u_2)$ from (5.5) with respect to u_2. Namely:

$$f(u_1, u_2) = \frac{\alpha}{\alpha u_2} [1-G(S_2-u_2+\theta_2-\mu)+G(-S_1-\mu)] = g(S_2-u_2+\theta_2-\mu)$$

$$\text{for } u_1=0,\ 0 < u_2 < S_2-R_2 \text{ and } -S_1 \leq u_2-S_2+\theta_2 < S_1 \leq S_2-u_2+\theta_2,$$

or

$$f(u_1, u_2) = \frac{\alpha}{\alpha u_2} [1-G(S_1-\mu)+G(-S_1-\mu)-G(S_2-u_2+\theta_2-\mu)+G(u_2-S_2+\theta_2-\mu)]$$

$$= g(S_2-u_2+\theta_2-\mu)+g(u_2-S_2+\theta_2-\mu)$$

$$\text{for } u_1=0,\ 0 < u_2 < S_2-R_2 \text{ and } -S_1 < S_1 \leq u_2-S_2+\theta_2 < S_2-u_2+\theta_2. \tag{5.6}$$

The value of $f(u_1, u_2)$ in the open interval $0 < u_1 < S_1-R_1$, $u_2=0$ is similarly obtained by taking the derivative of $F(u_1, u_2)$ with respect to u_1:

$$f(u_1, u_2) = \frac{\alpha}{\alpha u_1} [1-G(S_2+\theta_2-\mu)+G(u_1-S_1-\mu)] = g(u_1-S_1-\mu)$$

$$\text{for } 0 < u_1 < S_1-R_1,\ u_2=0 \text{ and } u_1-S_1 \leq -S_2+\theta_2 < S_1-\mu_1 \leq S_2+\theta_2,$$

or

$$f(u_1, u_2) = \frac{\alpha}{\alpha u_1} [1-G(S_1-u_1-\mu)+G(u_1-S_1-\mu)-G(S_2+\theta_2-\mu)+G(-S_2+\theta_2-\mu)]$$

$$= g(S_1-u_1-\mu)+g(u_1-S_1-\mu)$$

$$\text{for } 0 < u_1 < S_1-R_1,\ u_2=0 \text{ and } u_1-S_1 < S_1-u_1 \leq -S_2+\theta_2 < S_2+\theta_2. \tag{5.7}$$

As for the open interval $u_1=S_1-R_1$, $0 < u_2 < S_2-R_2$, we must be more careful. Taking the derivative of $F(u_1, u_2)$ with respect to u_2 will not give us the correct $f(u_1, u_2)$ in this open interval. Before we present the correct way to find $f(u_1, u_2)$ in this interval, let us take a closer look at the nature of $F(u_1, u_2)$ in this interval. Figure 11 shows how the value of $F(u_1, u_2)$ increases when u_2 moves along this interval from $(u_1=S_1-R_1,\ u_2=0^+)$ to $(u_1=S_1-R_1,\ u_2=(S_2-R_2)^-)$:

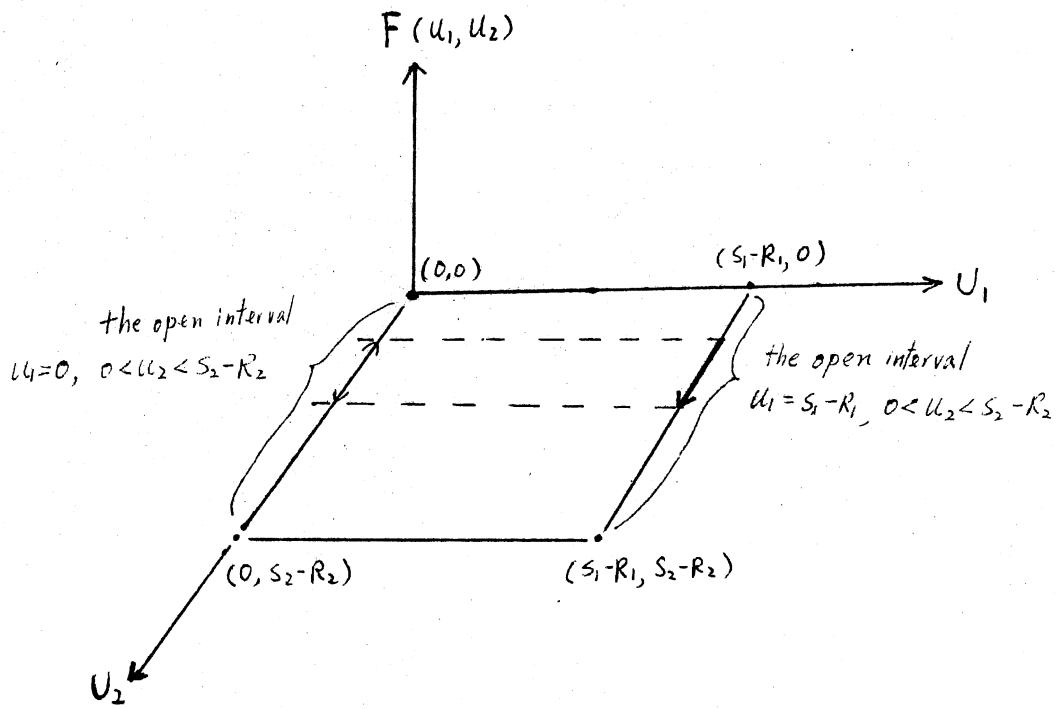

Figure 11. When u_2 Increases Along the Interval

$$u_1 = S_1-R_1, \quad 0 < u_2 < S_2-R_2$$

As u_2 increases along this interval, the value of $F(u_1, u_2)$ will increase too. The point we are trying to make here is that the increasing of the $F(u_1, u_2)$ value does not merely come from the probability mass of the interval $u_1=S_1-R_1$, $0 < u_2 < S_2-R_2$, but it also comes from the probability mass of the interval $u_1=0$, $0 < u_2 < S_2-R_2$. Therefore, before we take the derivative of $F(u_1, u_2)$, we have to subtract this extra contribution of probability mass coming from the interval $u_1=0$, $0 < u_2 < S_2-R_2$. Let us do this.

$[F(u_1, u_2)$ in the interval $u_1=S_1-R_1,\ 0 < u_2 < S_2-R_2]-$

$[F(u_1, u_2)$ in the interval $u_1=0,\ 0 < u_2 < S_2-R_2]$

$$
\begin{aligned}
&= [1-G(S_2-u_2+\theta_2-\mu)+G(u_2-S_2+\theta_2-\mu)]-[1-G(S_2-u_2+\theta_2-\mu)+G(-S_1-\mu)] \\
&= G(u_2-S_2+\theta_2-\mu)-G(-S_1-\mu) \\
&\qquad \text{for } -S_1 \le u_2-S_2+\theta_2 < S_1 \le S_2-u_2+\theta_2, \\
\text{or } &= [1-G(S_2-u_2+\theta_2-\mu)+G(u_2-S_2+\theta_2-\mu)] \\
&\quad -[1-G(S_1-\mu)+G(-S_1-\mu)-G(S_2-u_2+\theta_2-\mu)+G(u_2-S_2+\theta_2-\mu)] \\
&= G(S_1-\mu)+G(-S_1-\mu) \\
&\qquad \text{for } -S_1 < S_1 \le u_2-S_2+\theta_2 < S_2-u_2+\theta_2.
\end{aligned}
\tag{5.8}
$$

Now we can take the derivative of (5.8) with respect to u_2 and get $f(u_1, u_2)$ in this open interval:

$$
f(u_1, u_2) = \begin{cases}
g(u_2-S_2+\theta_2-\mu) & \\
\qquad \text{for } u_1=S_1-R_1,\ 0 < u_2 < S_2-R_2, \text{ and} & \\
\qquad\quad -S_1 \le u_2-S_2+\theta_2 < S_1 \le S_2-u_2+\theta_2 & \\
0 & \\
\qquad \text{for } u_1=S_1-R_1,\ 0 < u_2 < S_2-R_2, \text{ and} & \\
\qquad\quad -S_1 < S_1 \le u_2-S_2+\theta_2 < S_2-u_2+\theta_2. &
\end{cases}
\tag{5.9}
$$

The same precaution must be taken when we derive $f(u_1, u_2)$ for the open interval $0 < u_1 < S_1-R_1,\ u_2=S_2-R_2$. Following a similar argument, we take the derivative of

$[F(u_1, u_2)$ in the interval $0 < u_1 < S_1-R_1,\ u_2=S_2-R_2]-$

$[F(u_1, u_2)$ in the interval $0 < u_1 < S_1-R_1,\ u_2=0]$

and get:

$$f(u_1,u_2) = \begin{cases} g(S_1-u_1-\mu) \\ \quad \text{for } 0 < u_1 < S_1-R_1,\ u_2=S_2-R_2, \text{ and} \\ \qquad u_1-S_1 \le -S_2+\theta_2 < S_1-u_1 \le S_2+\theta_2 \\ 0 \\ \quad \text{for } 0 < u_1 < S_1-R_1,\ u_2=S_2-R_2, \text{ and} \\ \qquad u_1-S_1 < S_1-u_1 \le -S_2+\theta_2 < S_2+\theta_2 \end{cases} \tag{5.10}$$

To summarize, we put (5.1), (5.2), (5.3), (5.4), (5.6), (5.7), (5.9) and (5.10) together. Expression (5.11) below gives the joint probability density function of two linear coverages, which is a mixed p.d.f:

$$f_{C_1,\ C_2}(u_1,\ u_2) =$$

$$\begin{cases} 1-G(S_2+\theta_2-\mu)+G(-S_1-\mu) \\ \quad \text{for } u_1=0,\ u_2=0, \text{ and } -S_1 \le -S_2+\theta_2 < S_1 \le S_2+\theta_2 \\ 1-G(S_1-\mu)+G(-S_1-\mu)-G(S_2+\theta_2-\mu)+G(-S_2+\theta_2+\mu) \\ \quad \text{for } u_1=0,\ u_2=0, \text{ and } -S_1 < S_1 \le -S_2+\theta_2 < S_2+\theta_2 \\ G(R_2+\theta_2-\mu)-G(S_1-\mu) \\ \quad \text{for } u_1=0,\ u_2=S_2-R_2, \text{ and } -S_1 \le -R_2+\theta_2 < S_1 \le R_2+\theta_2 \\ G(R_2+\theta_2-\mu)-G(-R_2+\theta_2-\mu) \\ \quad \text{for } u_1=0,\ u_2=S_2-R_2, \text{ and } -S_1 < S_1 \le -R_2+\theta_2 < R_2-\theta_2 \\ G(-S_2+\theta_2-\mu)-G(-R_1-\mu) \\ \quad \text{for } u_1=S_1-R_1,\ u_2=0, \text{ and } -R_1 \le -S_2+\theta_2 < R_1 \le S_2+\theta_2 \\ G(R_1-\mu)+G(-R_1-\mu) \\ \quad \text{for } u_1=S_1-R_1,\ u_2=0, \text{ and } -R_1 < R_1 \le -S_2+\theta_2 < S_2+\theta_2 \end{cases}$$

$$
\begin{cases}
G(R_1-\mu)-G(-R_2+\theta_2-\mu) \\
\quad \text{for } u_1=S_1-R_1,\ u_2=S_2-R_2, \text{ and } -R_1 \le -R_2+\theta_2 < R_1 \le R_2+\theta_2 \\
0 \\
\quad \text{for } u_1=S_1-R_1,\ u_2=S_2-R_2, \text{ and } -R_1 < R_1 \le -R_2+\theta_2 < R_2+\theta_2 \\
g(S_2-u_2+\theta_2-\mu) \\
\quad \text{for } u_1=0,\ 0 < u_2 < S_2-R_2, \text{ and } -S_1 \le u_2-S_2+\theta_2 < S_1 \le S_2-u_2+\theta_2 \\
g(S_2-u_2+\theta_2-\mu)+g(u_2-S_2+\theta_2-\mu) \\
\quad \text{for } u_1=0,\ 0 < u_2 < S_2-R_2, \text{ and } -S_1 < S_1 \le u_2-S_2+\theta_2 < S_2-u_2+\theta_2 \\
g(u_1-S_1-\mu) \\
\quad \text{for } 0 < u_1 < S_1-R_1,\ u_2=0, \text{ and } u_1-S_1 \le -S_2+\theta_2 < S_1-u_1 \le S_2+\theta_2 \\
g(u_1-S_1-\mu)+g(S_1-u_1-\mu) \\
\quad \text{for } 0 < u_1 < S_1-R_1,\ u_2=0, \text{ and } u_1-S_1 < S_1-u_1 \le -S_2+\theta_2 < S_2+\theta_2 \\
g(u_2-S_2+\theta_2-\mu) \\
\quad \text{for } u_1=S_1-R_1,\ 0 < u_2 < S_2-R_2, \text{ and } -S_1 \le u_2-S_2+\theta_2 < S_1 \le S_2-u_2+\theta_2 \\
0 \\
\quad \text{for } u_1=S_1-R_1,\ 0 < u_2 < S_2-R_2, \text{ and } -S_1 < S_1 \le u_2-S_2+\theta_2 < S_2-u_2+\theta_2 \\
g(S_1-u_1-\mu) \\
\quad \text{for } 0 < u_1 < S_1-R_1,\ u_2=S_2-R_2, \text{ and } u_1-S_1 \le -S_2+\theta_2 < S_1-u_1 \le S_2+\theta_2 \\
0 \\
\quad \text{for } 0 < u_1 < S_1-R_1,\ u_2=S_2-R_2, \text{ and } u_1-S_1 < S_1-u_1 \le -S_2+\theta_2 < S_2+\theta_2 \\
0 \quad \text{otherwise.}
\end{cases}
\tag{5.11}
$$

In Figure 12, we give a diagram to show how this p.d.f. may look like. Again this diagram is a special case where the order of arrangement is always $A_1 \le A_2 < B_1 \le B_2$ when (u_1, u_2) is in region (5).

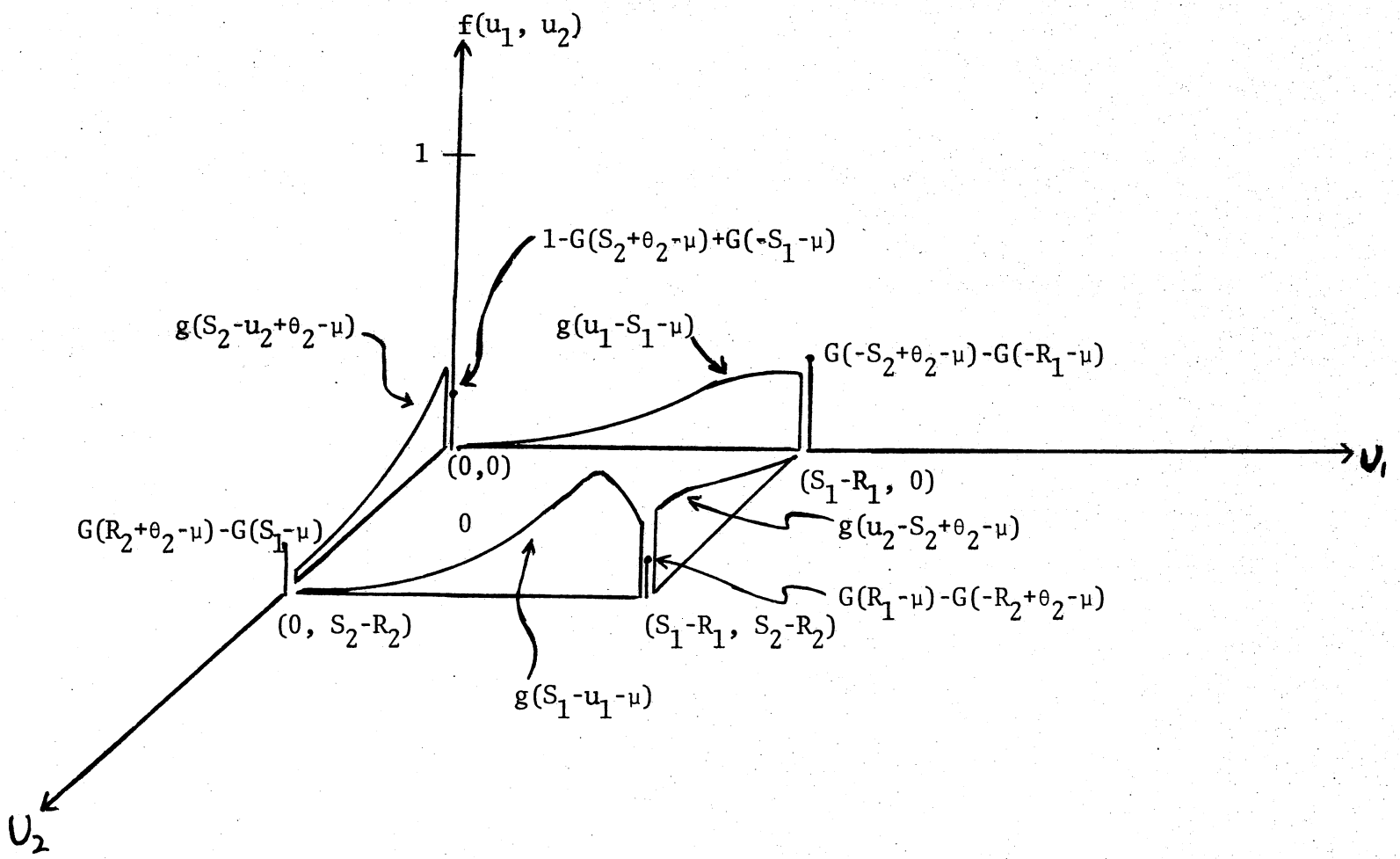

Figure 12. A p.d.f. of Two Linear Coverages

After we have obtained the joint c.d.f. and the joint p.d.f. of two linear coverages, the natural extension is to consider the joint c.d.f. of two rectangular coverages. The mathematical expression for it will be obtained in next chapter, however, unfortunately, this expression is of little practical usage as will be seen shortly.

CHAPTER VI

THE JOINT C.D.F. OF TWO RECTANGULAR COVERAGES

1. An Attempt to Use the Joint p.d.f. of Two Linear Coverages

In this chapter, we shall consider the situation where a rectangular pattern is delivered on two rectangular targets. To find this joint c.d.f. of two rectangular coverages, our first temptation is to make use of the joint p.d.f. of two linear targets which we have derived in Chapter V.

If we consider $f_{C_1, C_2}(u_1, u_2)$ in expression (5.11) as the joint p.d.f. of two linear coverages <u>in the range direction</u>, we may then use a similar argument to obtain the joint p.d.f. of two linear coverages <u>in the deflection direction</u>, $f_{C_1', C_2'}(u_1', u_2')$. Due to the fact that the two random vectors (C_1, C_2) and (C_1', C_2') are independent, we shall have the joint p.d.f. of (C_1, C_2, C_1', C_2') as the product of them, i.e.,

$$f_{C_1, C_2, C_1', C_2'}(u_1, u_2, u_1', u_2') = f_{C_1, C_2}(u_1, u_2) \cdot f_{C_1', C_2'}(u_1', u_2'). \tag{6.1}$$

Now letting Z_1, Z_2 be the rectangular coverages of Target 1 and Target 2 respectively, we shall have the following relationships:

$$Z_1 = C_1 \cdot C_1'$$

and $$Z_2 = C_2 \cdot C_2'.$$

Theoretically, the joint p.d.f. of Z_1 and Z_2 can be obtained by integrating (summing) the joint p.d.f. in expression (6.1) over the proper regions that is

$$F_{Z_1, Z_2}(v_1, v_2) = \Pr(Z_1 \le v_1, Z_2 \le v_2)$$

$$= \int_{(u_2, u_2') \in \mathcal{B}} \int_{(u_1, u_1') \in \mathcal{A}} \int dF(u_1, u_2, u_1', u_2') \tag{6.2}$$

where $\mathcal{A} = \{(u_1, u_1') \mid 0 \le u_1 \le S_1 - R_1, \quad 0 \le u_1' \le S_1' - R_1'\}$
$-\{(u_1, u_1') \mid \frac{v_1}{u_1'} < u_1 \le S_1 - R_1, \quad \frac{v_1}{S_1 - R_1} < u_1' \le S_1' - R_1'\}.$

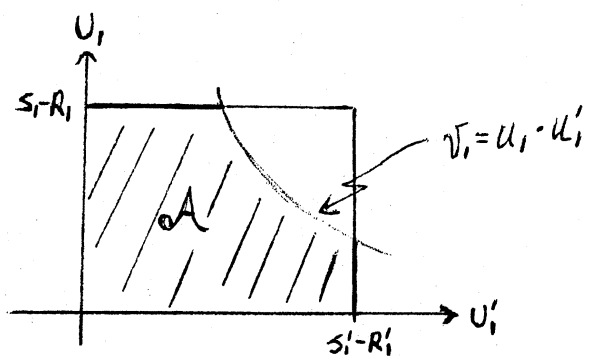

and $\mathcal{B} = \{(u_2, u_2') \mid 0 \le u_2 \le S_2 - R_2, \quad 0 \le u_2' \le S_2' - R_2'\}$
$-\{(u_2, u_2') \mid \frac{v_2}{u_2'} < u_2 \le S_2 - R_2, \quad \frac{v_2}{S_2 - R_2} < u_2' \le S_2' - R_2'\}.$

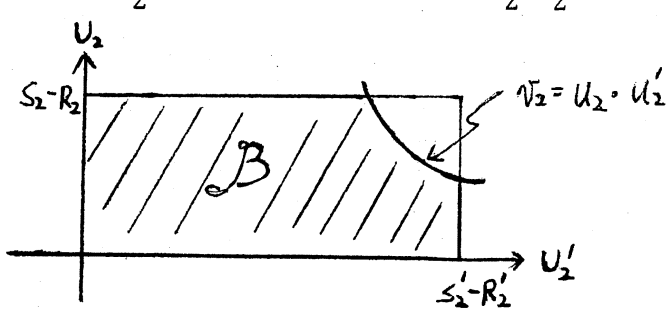

Although the joint p.d.f. of (C_1, C_2, C_1', C_2') can be obtained explicitly for (6.2), to carry out the integration in (6.2) is by no means an easy task. First of all, the joint p.d.f. of (C_1, C_2, C_1', C_2') in (6.1) is a multiple-faceted function defined in four-dimensional space. To make things worse, this is a joint p.d.f. of a mixed random vector. This means that when we integrate over the proper region, we have to sum up the probability mass of some points, some areas, and some volumes in this four-dimensional space. If this is not impossible, it is certainly not feasible.

In the next section, we shall consider another approach.

2. An Alternative Approach

Another way to look at this problem of finding the joint c.d.f. of two rectangular coverages is to find the right region on the two-dimensional plane such that the event $(Z_1 \leq v_1 \text{ and } Z_2 \leq v_2)$ will be satisfied when the center of the pattern falls within that region. This approach was used by Gay and Weeks (1973) in their derivation of the c.d.f. of one rectangular coverage. In the case of one rectangular target, the region corresponding to the event $(Z \leq v)$ for $0 \leq v < (S-R)(S'-R')$ is the complement of D in Figure 13 on next page.

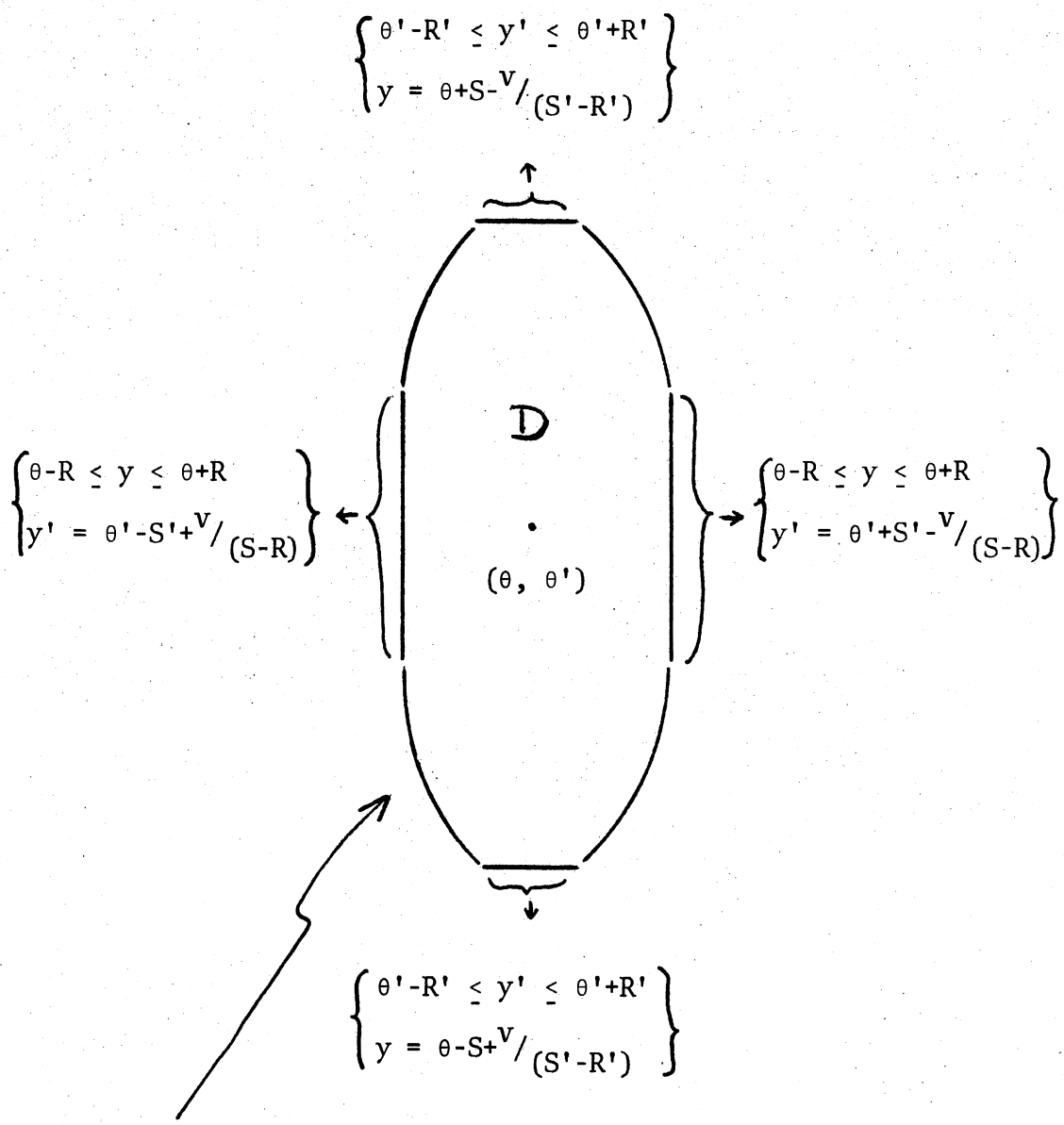

all the curves at the four corners are defined as

$|y-\theta|\cdot|y'-\theta'|-S'|y-\theta|-S|y'-\theta'|+S\cdot S' = v.$

Figure 13. The Region Corresponding to the Event $(Z \le v)$

The boundary of the region D consists of two segments in the range direction (| |), two segments in the deflection direction (=), and the curves at the corners (( )). An expression defining the four curves may be obtained if we realize that (2.2) can be simplified to

$$C=h(y) = \begin{cases} 0 & \text{when } y \leq -S+\theta \text{ or } y \geq S+\theta \\ S-R & \text{when } -R+\theta \leq y \leq R+\theta \\ S-|y-\theta| & \text{when } -S+\theta < y < -R+\theta \text{ or } R+\theta < y < S+\theta \end{cases}$$

and that

$$v = C \cdot C' = (S-|y-\theta|)(S'-|y'-\theta'|) = |y-\theta| \cdot |y'-\theta'| - S'|y-\theta| - S|y'-\theta'| + S \cdot S'.$$

The definition of the boundary used in Figure 13 is equivalent to that used by Gay and Weeks (1973, p. 10, Table 5).

Thus the way they obtained the c.d.f. of a rectangular coverage for $0 \leq v < (S-R)(S'-R')$ was essentially

$$F_Z(v) = \Pr[Z \leq v] = \Pr[(Y, Y') \notin D]$$

$$= 1 - \int\int_D f(y, y')dy\, dy'$$

where D is defined in Figure 13 and $f(y, y')$ is defined in (2.1). For $v < 0$ and $v \geq (S-R)(S'-R')$, the values of $F_Z(v)$ are 0 and 1 respectively.

If instead of one target, we have two targets under consideration, we certainly can construct two regions around Target 1 and Target 2 in exactly the same way that we constructed the D region illustrated in Figure 13. The diagram for two targets may look like what is shown in Figure 14.

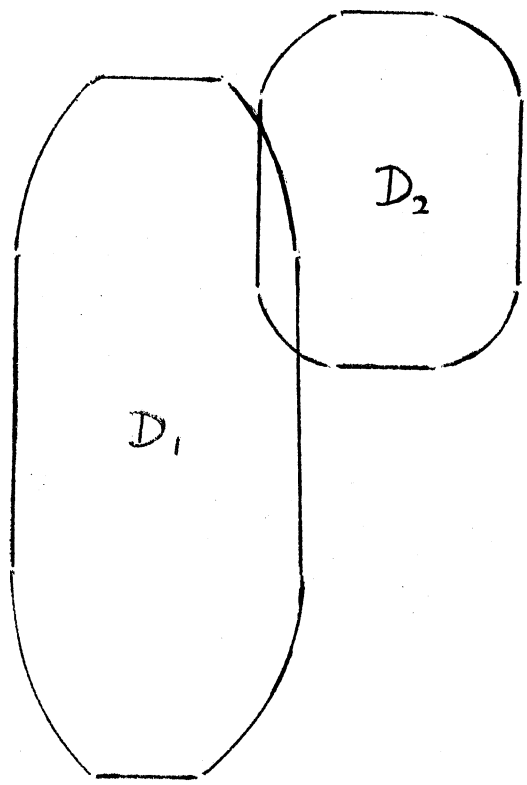

Figure 14. The Region Corresponding to the Event $(Z_1 \leq v_1, Z_2 \leq v_2)$

The bounderies of D_1 and D_2 can be obtained by subscripting the R, S, θ, and v in Figure 13 with "1" and "2".

It is clear from this diagram that the joint p.d.f. of two rectangular coverages for $0 \leq v_1 < (S_1-R_1)(S_1'-R_1')$ and $0 \leq v_2 < (S_2-R_2)(S_2'-R_2')$, can be obtained by integrating over all the plane outside $D_1 \cup D_2$, that is,

$$F_{Z_1,\, Z_2}(v_1,\, v_2) = Pr[Z_1 \le v_1,\, Z_2 \le v_2] = Pr[(Y,\, Y') \notin D_1 \cup D_2]$$

$$= 1 - Pr[(Y,\, Y') \in D_1 \cup D_2]$$

$$= 1 - [\int_{D_1}\int f(y,\, y')\, dy\, dy' + \int_{D_2}\int f(y,\, y')\, dy\, dy' - \int_{D_1 \cap D_2}\int f(y, y')\, dy\, dy']$$

$$\text{for } 0 \le v_1 < (S_1 - R_1)(S_1' - R_1') \text{ and } 0 \le v_2 < (S_2 - R_2)(S_2' - R_2') \tag{6.3}$$

For $(v_1,\, v_2)$ values other then that defined above, we have:

$$F_{Z_1,\, Z_2}(v_1,\, v_2) = \begin{cases} 0 & \text{for } v_1 < 0 \text{ or } v_2 < 0 \\ 1 & \text{for } v_1 \ge (S_1 - R_1)(S_1' - R_1') \text{ and } v_2 \ge (S_2 - R_2)(S_2' - R_2') \\ 1 - \int_{D_1}\int f(y,\, y')\, dy\, dy' & \text{for } 0 \le v_1 < (S_1 - R_1)(S_1' - R_1') \text{ and } v_2 \ge (S_2 - R_2)(S_2' - R_2') \\ 1 - \int_{D_2}\int f(y,\, y')\, dy\, dy' & \text{for } v_1 \ge (S_1 - R_1)(S_1' - R_1') \text{ and } 0 \le v_2 < (S_2 - R_2)(S_2' - R_2') \end{cases} \tag{6.3a}$$

We note that in (6.3) and (6.3a)

$$\int_{D_1}\int f(y,\, y')\, dy\, dy' = Pr(Z_1 > v_1) = 1 - Pr(Z_1 \le v_1) = 1 - F_{Z_1}(v_1)$$

which is, by expression (3.3),

$$1-[G(^{V1}/_{(S_1'-R_1')}-S_1-\mu)+G(^{V1}/_{(S_1'-R_1')}-S_1+\mu)]\cdot[1-G(-R_1'-\mu')-G(-R_1'+\mu')]$$

$$-\ G(^{V1}/_{(S_1-R_1)}-S_1'-\mu')-G(^{V1}/_{(S_1-R_1)}-S_1'+\mu')$$

$$-\int_{V1/(S_1-R_1)}^{S_1'-R_1'}[g(u'-S_1'-\mu')+g(u'-S_1'+\mu')]\cdot[G(^{V1}/_{u'}-S_1-\mu)+G(^{V1}/_{u'}-S_1+\mu)]du'. \tag{6.4}$$

Similarly,

$$\int_{D_2}\int f(y,\ y')dy\ dy'$$

can be expressed explicitly as

$$1-[G(^{V2}/_{(S_2'-R_2')}-S_2+\theta_2-\mu)+G(^{V2}/_{(S_2'-R_2')}-S_2-\theta_2+\mu)]\cdot$$

$$[1-G(-R_2'+\theta_2'-\mu')-G(-R_2'-\theta_2'+\mu')]$$

$$-\ G(^{V2}/_{(S_2-R_2)}-S_2'+\theta_2'-\mu')-G(^{V2}/_{(S_2-R_2)}-S_2'-\theta_2'+\mu')$$

$$-\int_{V2/(S_2-R_2)}^{S_2'-R_2'}[g(u'-S_2'+\theta_2'-\mu')+g(u'-S_2'-\theta_2'+\mu')]\cdot$$

$$[G(^{V2}/_{u'}-S_2+\theta_2-\mu)+G(^{V2}/_{u'}-S_2-\theta_2+\mu)]du'. \tag{6.5}$$

However, the term

$$\int_{D_1\cap D_2}\int f(y,\ y')\ dy\ dy'$$

in expression (6.3) is the one which causes a lot of trouble. The difficulty arises because there are so many possible shapes which the region $D_1\cap D_2$ may take that, a systematic treatment by a computer

program is almost impossible. In Figure 15 below, we give a few shapes that $D_1 \cap D_2$ may assume:

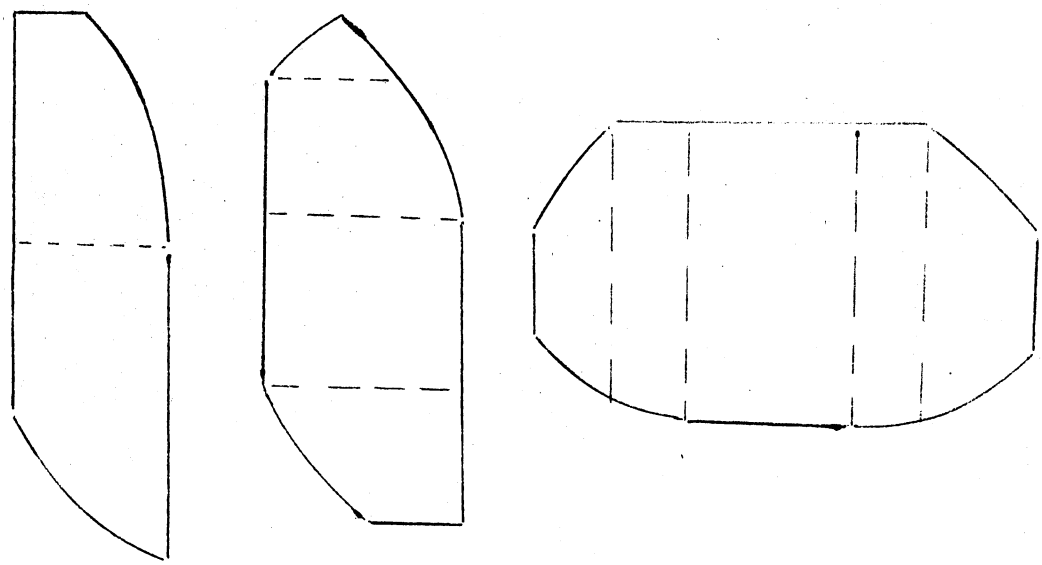

Figure 15. Some Possible Shapes $D_1 \cap D_2$ May Take.

To compound the problem, there are so many ways that we may or should partition the region "properly" that it is very hard to instruct a computer to do it. (The dotted lines in the above regions indicate a possible way of partitioning them.)

To be fair, the problem is not as difficult when the numerical values of the configuration are given. If we are given specific values of T_1, T_2, P, θ_2, θ_2', μ, μ', v_1 and v_2, then we can draw a diagram like the one in Figure 14, and partition the $D_1 \cap D_2$ region properly

that we can integrate over it. Nevertheless, as far as computer programming is concerned, this approach again leads us nowhere.

Thus far, we have witnessed the collapse of two attemps to obtain a computer programmable formula for the joint c.d.f. of two rectangular coverages although in both cases "mathematical expressions" ((6.2), (6.3), and (6.3a)) were obtained for it. We shall take up this subject again in Chapter VIII. In the next chapter, we shall confine ourselves to the investigation of the joint probabilities of some "interesting" and "useful" events. For example, the joint probability of hitting both targets, of missing both targets, of achieving the maximum possible coverage on both targets, etc.

CHAPTER VII

THE JOINT PROBABILITIES OF SOME INTERESTING EVENTS

1. The Probability of Hitting Both Targets

Although in general we cannot obtain the joint probability of two rectangular coverages exactly, it is possible to find the exact joint probability of some "interesting" events such as the ones given in Questions (1) through (5) in Chapter I, Section 1. First, let us take Question (1) "What is the probability of hitting both targets?"

Around Target 1, we can construct a shaded <u>rectangle</u> (call it K_1) such that when the pattern center lands inside it, we shall have some coverage on Target 1, and when the pattern center lands outside it, we shall have a complete miss on Target 1. Figure 16 shows the boundaries of this rectangle.

The marginal probabilities of hitting and missing Target 1 can be obtained as Pr(hitting Target 1)

$$= \iint_{K_1} f(y, y')\, dy\, dy' = [G(S_1-\mu)-G(-S_1-\mu)]\cdot[G(S_1'-\mu')-G(-S_1'-\mu')]$$

$$= a \tag{7.1}$$

and

$$\Pr(\text{missing Target 1}) = 1 - a. \tag{7.2}$$

(Note the closed form of these solutions)

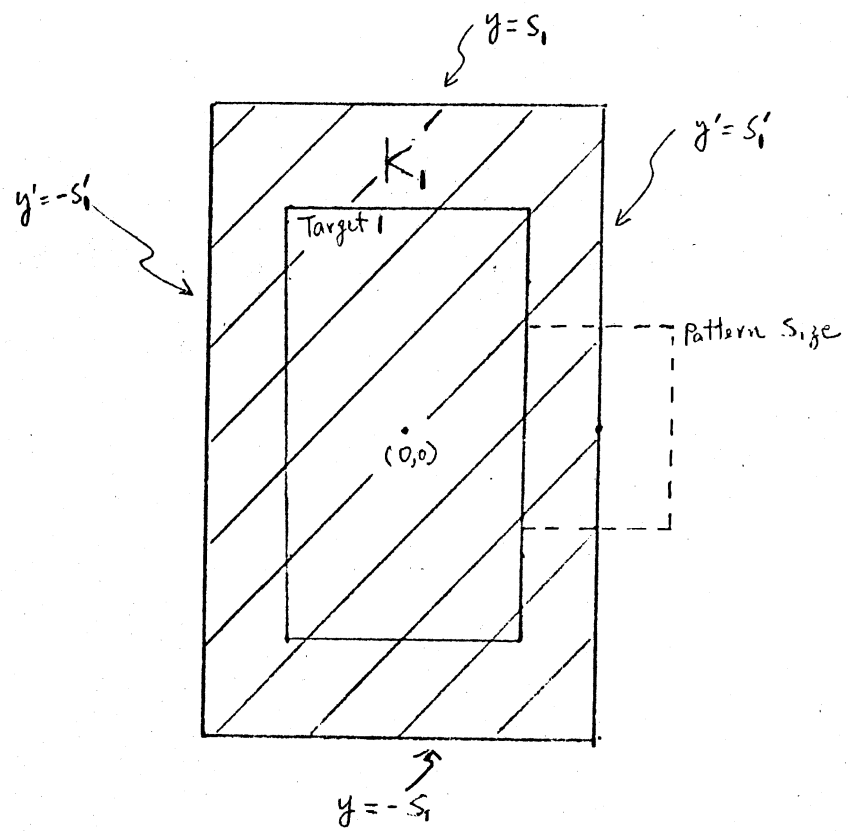

Figure 16. The Rectangle Corresponding to the Event "Hitting Target 1"

Similarly, we can construct another shaded rectangle (call it K_2) around Target 2 (with center at (θ_2, θ_2')). The marginal probabilities of hitting and missing Target 2 are:

Pr(hitting Target 2)

$$= \iint_{K_2} f(y, y')\, dy\, dy' = [G(\theta_2+S_2-\mu)-G(\theta_2-S_2-\mu)]\cdot [G(\theta_2'+S_2'-\mu')-G(\theta_2'-S_2'-\mu')] = b \qquad (7.3)$$

and

Pr(missing Target 2) = 1 - b.

Figure 17 shows both K_1 and K_2 on the same diagram.

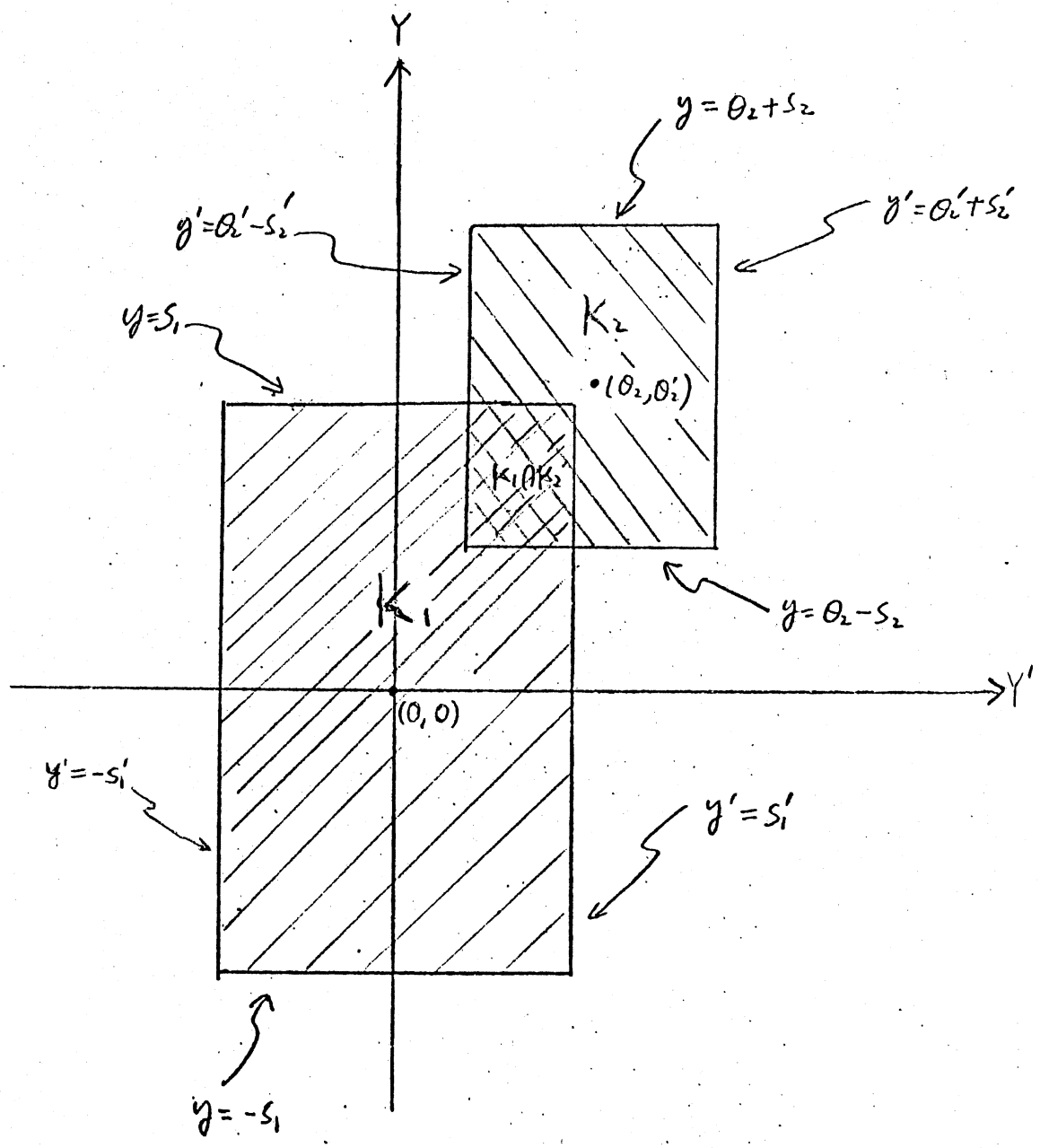

Figure 17. The Rectangle Corresponding to the Event "Hitting Both Targets"

From this diagram, it is not difficult to see that

$$\Pr(\text{hitting both targets}) = \int\int_{K_1 \cap K_2} f(y, y')\, dy\, dy'. \tag{7.5}$$

The expression given in (7.5) shall again give an answer in closed form. The actual expression for (7.5) depends on the way K_1 and K_2 intersect. A few examples are given in Figure 18.

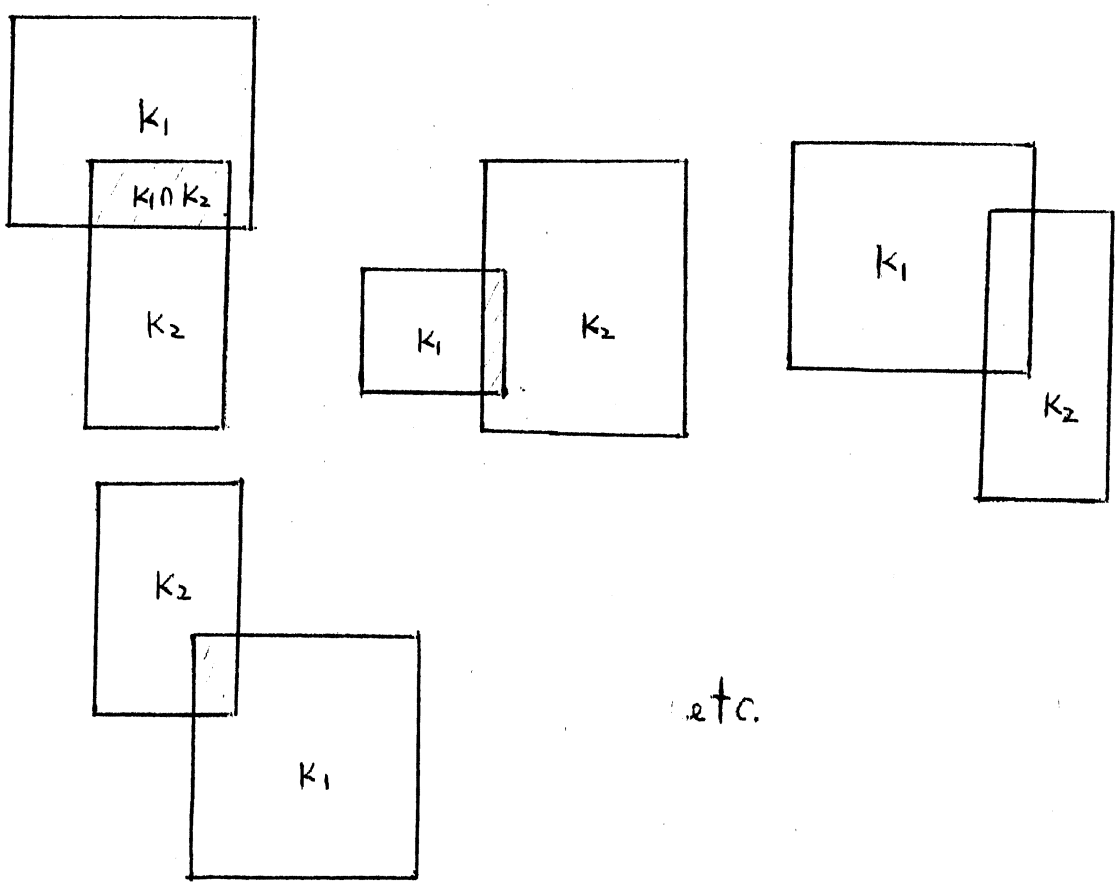

Figure 18. Types of Intersection of the Sets K_1 and K_2

For each of the above intersections, the limits of integration for region $K_1 \cap K_2$ are different. A way to exhaust all the possible ways of intersection is to consider the linear intersection for each of the range direction and the deflection direction first and then take the product.

Let us start with the intersection in the range direction. We note first that the extent of the boundary segment in the range direction is from $-S_1$ to S_1 for K_1, call this Segment 1, and from θ_2-S_2 to θ_2+S_2 for K_2, call this Segment 2. For ease of discussion in what follows, let us define

$L_1 = -S_1$ (the "tail" of Segment 1 in the range direction)

$H_1 = S_1$ (the "head" of Segment 1 in the range direction)

$L_2 = \theta_2-S_2$ (the "tail" of Segment 2 in the range direction)

$H_2 = \theta_2+S_2$ (the "head" of Segment 2 in the range direction). (7.6)

Since both S_1 and S_2 are positive numbers, we have the following obvious relationships:

$$L_1 < H_1 \quad \text{and} \quad L_2 < H_2.$$

The definition given in (7.6) and the relationship among L_1, H_1, L_2, and H_2 may make one recall Definition (4.4) and the relationship among A_1, B_1, A_2, and B_2 in Chapter IV. They are indeed closely related. As a matter of fact, L_1, H_1, L_2, and H_2 are special cases of A_1, B_1, A_2, and B_2 when $u_1 = u_2 = 0$. Similar to expression (4.4a), we find the six ways Segment 1 and Segment 2 intersect to be:

1. $L_1 \leq L_2 < H_1 \leq H_2$
2. $L_2 \leq L_1 < H_2 \leq H_1$
3. $L_1 < H_1 \leq L_2 < H_2$

4. $L_2 < H_2 \leq L_1 < H_1$

5. $L_1 \leq L_2 < H_2 \leq H_1$

6. $L_2 \leq L_1 < H_1 \leq H_2$. (7.7)

Corresponding to the six cases given in (7.7), the intersections are respectively:

1. $[L_2, H_1] = [\theta_2 - S_2, S_1]$

2. $[L_1, H_2] = [-S_1, \theta_2 + S_2]$

3. ϕ

4. ϕ

5. $[L_2, H_2] = [\theta_2 - S_2, \theta_2 + S_2]$

6. $[L_1, H_1] = [-S_1, S_1]$. (7.8)

The notation $[x, y]$ is understood as the closed interval from x to y.

If we consider the linear intersection in the deflection direction, we shall have also six cases:

1. $L_1' \leq L_2' < H_1' \leq H_2'$

2. $L_2' \leq L_1' < H_2' \leq H_1'$

3. $L_1' < H_1' \leq L_2' < H_2'$

4. $L_2' < H_2' \leq L_1' < H_1'$

5. $L_1' \leq L_2' < H_2' \leq H_1'$

6. $L_2' \leq L_1' < H_1' \leq H_2'$ (7.9)

where L_1', H_1', L_2', and H_2' are defined similar to (7.6) but in the deflection direction. We shall have the respective intersection corresponding to (7.9) as

1. $[L_2', H_1'] = [\theta_2' - S_2', S_1']$

2. $[L_1', H_2'] = [-S_1, \theta_2' + S_2']$

3. ϕ

4. ϕ

5. $[L_2', H_2'] = [\theta_2'-S_2', \theta_2'+S_2']$

6. $[L_1', H_1'] = [-S_1', S_1']$. (7.10)

Now we can find product sets of the six cases in the range direction with the six cases in the deflection direction. The resultant 36 cases and the corresponding intersections are listed in TABLE I.

TABLE I

CASES OF $K_1 \cap K_2$

Case Number	Way of Intersecting in Range Direction	Way of Intersecting in Deflection Direction	The Resultant $K_1 \cap K_2$	Looks Like
1	$L_1 \leq L_2 < H_1 \leq H_2$	$L_1' \leq L_2' < H_1' \leq H_2'$	$[\theta_2-S_2, S_1] \times [\theta_2'-S_2', S_1']$	
2	"	$L_2' \leq L_1' < H_2' \leq H_1'$	$[\theta_2-S_2, S_1] \times [-S_1', \theta_2'+S_1']$	
3	"	$L_1' < H_1' \leq L_2' < H_2'$	ϕ	
4	"	$L_2' < H_2' \leq L_1' < H_1'$	ϕ	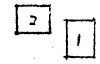
5	"	$L_1' \leq L_2' < H_2' \leq H_1'$	$[\theta_2-S_2, S_1] \times [\theta_2'-S_2', \theta_2'+S_2']$	
6	"	$L_2' \leq L_1' < H_1' \leq H_2'$	$[\theta_2-S_2, S_1] \times [-S_1', S_1']$	
7	$L_2 \leq L_1 < H_2 \leq H_1$	$L_1' \leq L_2' < H_1' \leq H_2'$	$[-S_1, \theta_2+S_2] \times [\theta_2'-S_2', S_1']$	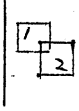

(TABLE I continued)

8	"	$L_2' \leq L_1' < H_2' \leq H_1'$	$[-S_1, \theta_2+S_2] \times [-S_1, \theta_2'+S_2']$	
9	"	$L_1' < H_1' \leq L_2' < H_2'$	ϕ	
10	"	$L_2' < H_2' \leq L_1' < H_1'$	ϕ	
11	"	$L_1' \leq L_2' < H_2' \leq H_1'$	$[-S_1, \theta_2+S_2] \times [\theta_2'-S_2', \theta_2'+S_2']$	
12	"	$L_2' \leq L_1' < H_1' \leq H_2'$	$[-S_1, \theta_2+S_2] \times [-S_1', S_1']$	
13	$L_1 < H_1 \leq L_2 < H_2$	$L_1' \leq L_2' < H_1' \leq H_2'$	ϕ	
14	"	$L_2' \leq L_1' < H_2' \leq H_1'$	ϕ	
15	"	$L_1' < H_1' \leq L_2' < H_2'$	ϕ	
16	"	$L_2' < H_2' \leq L_1' < H_1'$	ϕ	
17	"	$L_1' \leq L_2' < H_2' \leq H_1'$	ϕ	
18	"	$L_2' \leq L_1' < H_1' \leq H_2'$	ϕ	
19	$L_2 < H_2 \leq L_1 < H_1$	$L_1' \leq L_2' < H_1' \leq H_2'$	ϕ	
20	"	$L_2' \leq L_1' < H_2' \leq H_1'$	ϕ	

(TABLE I continued)

21	"	$L_1' < H_1' \leq L_2' < H_2'$	ϕ	
22	"	$L_2' < H_2' \leq L_1' < H_1'$	ϕ	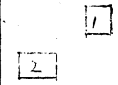
23	"	$L_1' \leq L_2' < H_2' \leq H_1'$	ϕ	
24	"	$L_2' \leq L_1' < H_1' \leq H_2'$	ϕ	
25	$L_1 \leq L_2 < H_2 \leq H_1$	$L_1' \leq L_2' < H_1' \leq H_2'$	$[\theta_2 - S_2, \theta_2 + S_2] \times [\theta_2' - S_2', S_1']$	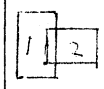
26	"	$L_2' \leq L_1' < H_2' \leq H_1'$	$[\theta_2 - S_2, \theta_2 + S_2] \times [-S_1', \theta_2' + S_2']$	
27	"	$L_1' < H_1' \leq L_2' < H_2'$	ϕ	
28	"	$L_2' < H_2' \leq L_1' < H_1'$	ϕ	
29	"	$L_1' \leq L_2' < H_2' \leq H_1'$	Impossible Case	
30	"	$L_2' \leq L_1' < H_1' \leq H_2'$	Impossible Case	
31	$L_2 \leq L_1 < H_1 \leq H_2$	$L_1' \leq L_2' < H_1' \leq H_2'$	$[-S_1, S_1] \times [\theta_2' - S_2', S_1']$	
32	"	$L_2' \leq L_1' < H_2' \leq H_1'$	$[-S_1, S_1] \times [-S_1', \theta_2' + S_2']$	
33	"	$L_1' < H_1' \leq L_2' < H_2'$	ϕ	

(TABLE I continued)

34	"	$L_2' < H_2' \leq L_1' < H_1'$	ϕ	
35	"	$L_1' \leq L_2' < H_2' \leq H_1'$	Impossible Case	
36	"	$L_2' \leq L_1' < H_1' \leq H_2'$	Impossible Case	

We now prove that Cases 29, 30, 35, and 36 are impossible. Let us take Case 29 first. This case gives the way of intersection as:

$$L_1 \leq L_2 < H_2 \leq H_1 \quad \text{and} \quad L_1' \leq L_2' < H_2' \leq H_1'.$$

By definition, this is

$$-S_1 \leq \theta_2 - S_2 < \theta_2 + S_2 \leq S_1 \quad \text{and} \quad -S_1' \leq \theta_2' - S_2' < \theta_2' + S_2' \leq S_1'. \tag{7.11}$$

The first inequality in (7.11) implies consecutively

$$-S_1 \leq \theta_2 - S_2 \quad \text{and} \quad \theta_2 + S_2 \leq S_1$$

$$-T_1 - P \leq \theta_2 - T_2 - P \quad \text{and} \quad \theta_2 + T_2 + P \leq T_1 + P \quad \text{(by definition)}$$

$$-T_1 \leq \theta_2 - T_2 \quad \text{and} \quad \theta_2 + T_2 \leq T_1$$

$$-T_1 < \theta_2 \quad \text{and} \quad \theta_2 < T_1 \quad \text{(since } T_2 \text{ is positive)}$$

$$|\theta_2| < T_1. \tag{7.12}$$

Similarly, the second inequality in (7.11) implies

$$|\theta_2'| < T_1'. \tag{7.13}$$

But (7.13) together with (7.12) means the center of Target 2 is inside Target 1 area, which is not allowed. Hence Case 29 is an impossible case.

Let us take Case 30 next. This case has an intersection given by:

$$L_1 \leq L_2 < H_2 \leq H_1 \quad \text{and} \quad L_2' \leq L_1' < H_1' \leq H_2'.$$

By definition, this is

$$-S_1 \leq \theta_2 - S_2 < \theta_2 + S_2 \leq S_1 \quad \text{and} \quad \theta_2' - S_2' \leq -S_1' < S_1' \leq \theta_2' + S_2'. \tag{7.14}$$

The first inequality in (7.14), as we have seen just a moment ago, implies

$$|\theta_2| < T_1. \tag{7.15}$$

The second inequality in (7.14) implies, consecutively,

$$\theta_2' - S_2' \leq -S_1' \quad \text{and} \quad S_1' \leq \theta_2' + S_2'$$

$$\theta_2' - T_2' - P' \leq -T_1' - P \quad \text{and} \quad T_1' + P \leq \theta_2' + T_2' + P \quad \text{(by definition)}$$

$$\theta_2' \leq -T_1' + T_2' \quad \text{and} \quad T_1' - T_2' \leq \theta_2'$$

$$\theta_2' < T_1' + T_2' \quad \text{and} \quad -T_1' - T_2' < \theta_2' \quad \text{(since } T_1' \text{ and } T_2' \text{ are positive)}$$

$$|\theta_2'| < T_1' + T_2'. \tag{7.16}$$

(7.16), together with (7.15), implies that the area of Target 1 and the area of Target 2 overlap like what is shown in Figure 19. This is again not allowed. Hence Case 30 is also an impossible case.

The impossibility of Case 35 can be proved by the same reasoning used for Case 30, and the impossibility of Case 36 can be proved in the same way as Case 29. It is just a matter of reversing Target 1 and Target 2.

Once the boundaries of $K_1 \cap K_2$ are well defined in TABLE I for all possible cases, we can proceed to find the joint probability of hitting both targets. Let us define

$$c = \Pr(\text{hitting both targets}).$$

From Expression (7.5) and TABLE I we have the following results:

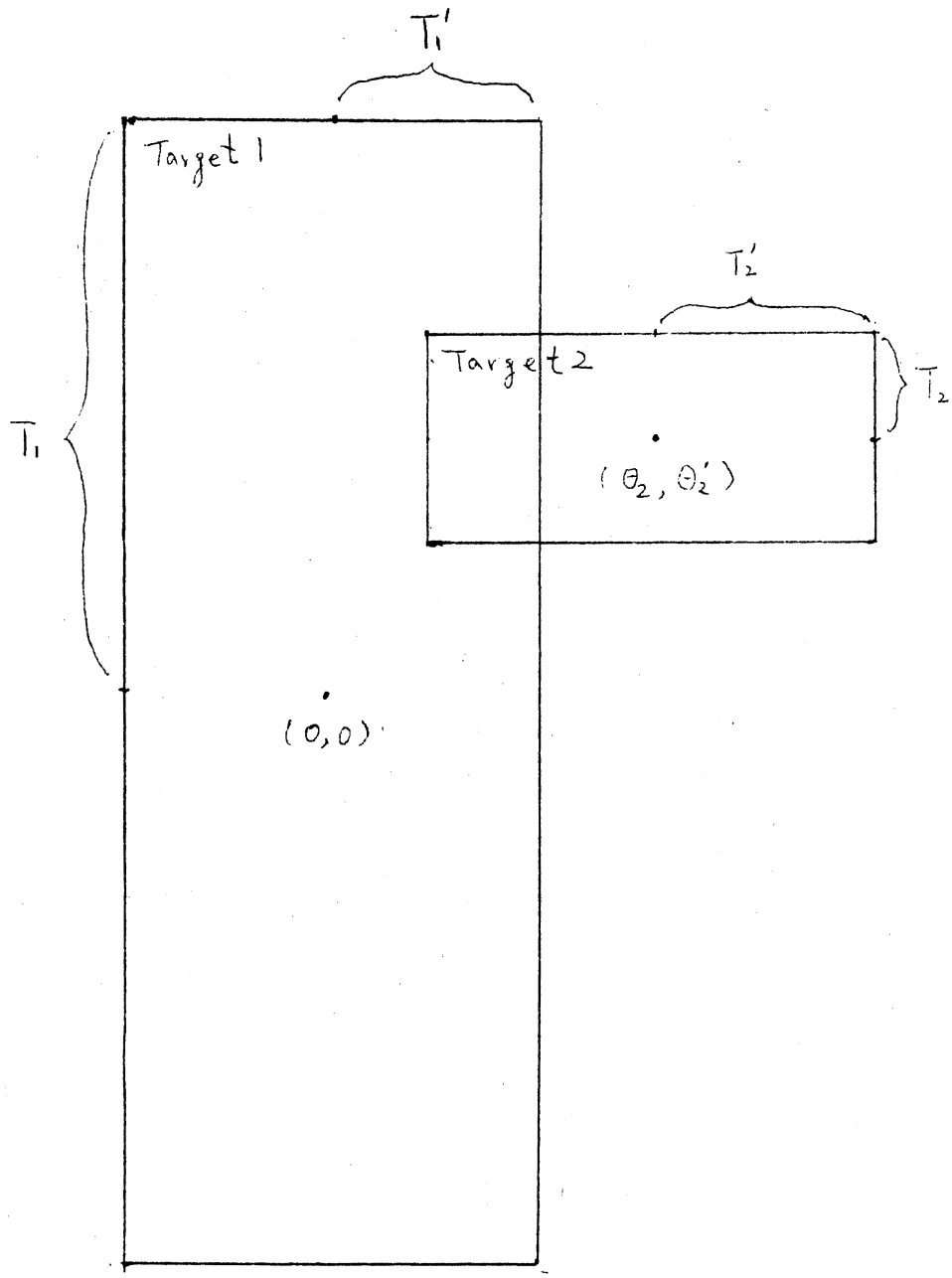

Figure 19. Targets Overlapping Implied by Case 30

Case 1: $c = \int\int_{K_1 \cap K_2} f(y, y')\, dy\, dy' = \int_{\theta_2 - S_2}^{S_1} f(y)dy \cdot \int_{\theta_2' - S_2'}^{S_1'} f(y')dy'$

$= [G(S_1-\mu)-G(\theta_2-S_2-\mu)]\cdot[G(S_1'-\mu')-G(\theta_2'-S_2'-\mu')]$

Case 2: $c = \int_{\theta_2 - S_2}^{S_1} f(y)dy \cdot \int_{-S_1'}^{\theta_2'+S_2'} f(y')dy'$

$= [G(S_1-\mu)-G(\theta_2-S_2-\mu)]\cdot[G(\theta_2'+S_2'-\mu')-G(-S_1'-\mu')]$

Case 5: $c = [G(S_1-\mu)-G(\theta_2-S_2-\mu)]\cdot[G(\theta_2'+S_2'-\mu')-G(\theta_2'-S_2'-\mu')]$

Case 6: $c = [G(S_1-\mu)-G(\theta_2-S_2-\mu)]\cdot[G(S_1'-\mu')-G(-S_1'-\mu')]$

Case 7: $c = [G(\theta_2+S_2-\mu)-G(-S_1-\mu)]\cdot[G(S_1'-\mu')-G(\theta_2'-S_2'-\mu')]$

Case 8: $c = [G(\theta_2+S_2-\mu)-G(-S_1-\mu)]\cdot[G(\theta_2'+S_2'-\mu')-G(-S_1'-\mu')]$

Case 11: $c = [G(\theta_2+S_2-\mu)-G(-S_1-\mu)]\cdot[G(\theta_2'+S_2'-\mu')-G(\theta_2'-S_2'-\mu')]$

Case 12: $c = [G(\theta_2+S_2-\mu)-G(-S_1-\mu)]\cdot[G(S_1'-\mu')-G(-S_1'-\mu')]$

Case 25: $c = [G(\theta_2+S_2-\mu)-G(\theta_2-S_2-\mu)]\cdot[G(S_1'-\mu')-G(\theta_2'-S_2'-\mu')]$

Case 26: $c = [G(\theta_2+S_2-\mu)-G(\theta_2-S_2-\mu)]\cdot[G(\theta_2'+S_2'-\mu')-G(-S_1'-\mu')]$

Case 31: $c = [G(S_1-\mu)-G(-S_1-\mu)]\cdot[G(S_1'-\mu')-G(\theta_2'-S_2'-\mu')]$

Case 32: $c = [G(S_1-\mu)-G(-S_1-\mu)]\cdot[G(\theta_2'+S_2'-\mu')-G(-S_1'-\mu')]$.

$c = 0$ for cases 3, 4, 9, 10, 13, 14, 15, 16, 17, 18, 19, 20, 21, 22, 23, 24, 27, 28, 33, and 34. Case 29, 30, 35, and 36 are impossible cases. We shall call all the above expressions of c collectively as <u>formula (7.17)</u>

2. A Two-way Table to Find Probabilities of Some Other Interesting Events

The joint probability of hitting both targets which we obtained in formula (7.17), together with the marginal probabilities expressed in (7.1), (7.2), (7.3), and (7.4), will enable us to also answer the following questions easily:

(2) What is the probability of hitting Target 1 but missing Target 2?

(3) What is the probability of hitting Target 2 but missing Target 1?

(4) What is the probability of missing both targets?

Before answering these questions, we recall that, in expression (7.1) and (7.3), we have

$$a = \Pr(\text{hitting Target 1})$$
$$= [G(S_1-\mu)-G(-S_1-\mu)]\cdot[G(S_1'-\mu')-G(-S_1'-\mu')], \text{ and}$$
$$b = \Pr(\text{hitting Target 2})$$
$$= [G(\theta_2+S_2-\mu)-G(\theta_2-S_2-\mu)]\cdot[G(\theta_2'+S_2'-\mu')-G(\theta_2'-S_2'-\mu')].$$

A two-way table can be constructed in the following way: We first enter the joint probability of hitting both targets, the marginal probabilities of hitting and missing Target 1, and the marginal probabilities of hitting and missing Target 2 in the table. The remaining three cells then can be filled in by using the principle that the sum of the row entries equals to the row margin and the sum of the column entries equals to the column margin. The circled values in Figure 20 are filled in by using this principle.

		Target 2		
		Hitting	Missing	Marginal Probabilities
Target 1	Hitting	c	a-c	a
	Missing	b-c	1-a-b+c	1-a
Marginal Probabilities		b	1-b	

Figure 20. A Two-way Table of Joint Probabilities

Question (2), (3), and (4) are then answered by (a-c), (b-c), and (1-a-b+c) respectively. We note that all the answers are in closed form since a, b, and c are all in closed form. Figure 21 below shows a two-way table with numerical values as an example:

		Target 2		
		Hitting	Missing	Marginal Probabilities
Target 1	Hitting	0.5	0.7-0.5=0.2	0.7
	Missing	0.6-0.5=0.1	1-0.7-0.6+0.5=0.2	0.3
Marginal Probabilities		0.6	0.4	

Figure 21. A Two-way Table with Numerical Values

3. An Extention of the Two-way Table Method

The Two-way Table Method illustrated in the last section may also be extended to the case of n rectangular patterns, identical* or non-identical. As usual, we assume that all pattern landing points are distributed independently.

Let us consider the case of n identical patterns first. The probability that all n patterns miss Target 1 is the product of the probabilities of Pattern 1 missing Target 1, Pattern 2 missing Target 1, ...,and Pattern n missing Target 1. This is nothing but $(1-a)^n$. Similarly, we shall have

Pr(all n patterns missing Target 2) = $(1-b)^n$, and

Pr(all n patterns missing both targets) = $(1-a-b+c)^n$

Thus the two-way table corresponding to the n identical patterns can be constructed by entering these three values first. Figure 22 gives an illustration. Again the circled values are filled in by using the "sum equals the margin" principle. We note that the probability in the "Hitting-Hitting" cell in Figure 22 is the probability that Target 1 is hit by <u>at least one</u> of the n patterns and Target 2 is hit by <u>at least one</u> of the n patterns.

When we have n <u>non-identical</u> patterns, the procedure is more tedious. We have to construct a two-way table for each pattern. Figure 23 shows such a table for the ith pattern.

---

* n patterns are identical if they have same size, same aim point, and same aiming errors.

		Target 2		
		Hitting	Missing	Marginal Probabilities
Target 1	Hitting	$1-(1-a)^n-(1-b)^n+(1-a-b+c)^n$	$(1-b)^n-(1-a-b+c)^n$	$1-(1-a)^n$
	Missing	$(1-a)^n-(1-a-b+c)^n$	$(1-a-b+c)^n$	$(1-a)^n$
Marginal Probabilities		$1-(1-b)^n$	$(1-b)^n$	

Figure 22. A Two-way Table for n Identical Patterns

		Target 2		
		Hitting	Missing	Marginal Probabilities
Target 1	Hitting	c_i	a_i-c_i	a_i
	Missing	b_i-c_i	$1-a_i-b_i+c_i$	$1-a_i$
Marginal Probabilities		b_i	$1-b_i$	

Figure 23. A Two-way Table for the $i^{\underline{th}}$ Non-identical Pattern

Thus, for $i = 1, 2, \ldots, n$, we have n two-way tables, each is like the one above. We note that, in general, $a_i \neq a_j$, $b_i \neq b_j$, and $c_i \neq c_j$ for $i \neq j$.

A reasoning similar to the one we used to obtain the two-way table in Figure 22 will lead us to the construction of the two-way table for n non-identical patterns. The two-way table given in Figure 24 results.

		Target 2		
		Hitting	Missing	Marginal Probabilities
Target 1	Hitting	$\prod_{i=1}^{n}(1-a_i)-\prod_{i=1}^{n}(1-b_i)+\prod_{i=1}^{n}(1-a_i-b_i+c_i)$	$\prod_{i=1}^{n}(1-b_i)-\prod_{i=1}^{n}(1-a_i-b_i+c_i)$	$\prod_{i=1}^{n}(1-a_i)$
	Missing	$\prod_{i=1}^{n}(1-a_i)-\prod_{i=1}^{n}(1-a_i-b_i+c_i)$	$\prod_{i=1}^{n}(1-a_i-b_i+c_i)$	$\prod_{i=1}^{n}(1-a_i)$
Marginal Probabilities		$\prod_{i=1}^{n}(1-b_i)$	$\prod_{i=1}^{n}(1-b_i)$	

Figure 24. A Two-way Table for n Non-identical Patterns

To summarize Sections 2 and 3 of this chapter, we have developed a procedure, the so called "Two-way Table Method", which enables us to answer Question (1), (2), (3), and (4), specified in Section 1 of Chapter 1, for n identical or non-identical patterns by merely using formulas (7.1), (7.3), and (7.17).

4. The Fewest Number of Passes Required to Achieve a Specified Probability of Hitting Both Targets

Suppose we have identical rectangular patterns delivered on two rectangular targets. Another interesting question one may ask is, "What is the fewest number of passes required to have a probability of at least, say 0.9 of hitting both targets?" The answer to this question turns out to be rather easy to find. We first obtain values for a, b, and c from Formulas (7.1), (7.3), and (7.17), respectively. Once this is done, we use the expression in the "Hitting-Hitting" cell of the two-way table in Figure 22 and obtain the following inequality:

$$1-(1-a)^n-(1-b)^n+(1-a-b+c)^n \geq 0.9. \qquad (7.18)$$

Since the values of a, b, and c are known, the smallest value of n which satisfies the inequality in (7.18) can be found using a simple iterative procedure.

If we do not know c, the joint probability of hitting both targets, and use the product of marginal probabilities, $a \cdot b$, to estimate c, what would happen to the calculation of the n value? The answer is that we may sometimes over estimate it and sometimes under estimate it Consider inequality (7.19) below:

$$1-(1-a)^n-(1-b)^n+(1-a-b+ab)^n \geq 0.9. \qquad (7.19)$$

This is an inequality we could use to calculate n were c not available. When $a \cdot b$ is greater than c, the n value obtained from (7.19) will be smaller than the true n value. On the other hand, when $a \cdot b$ is

smaller than c, the n value obtained from (7.19) will be greater than the true n value. This is true since $(1-a-b+x)^n$ is a monotone increasing function of x.

Another related question is the following. Does the fact that an n value that satisfies both Pr(hitting Target 1) $\geq$ 0.9 and Pr(hitting Target 2) $\geq$ 0.9 imply that this n value will also satisfy Pr(hitting both targets) $\geq$ 0.9? The answer is no. The relationship between the joint probability and its two marginal probabilities is

Pr(hitting both targets) < min[Pr(hitting Target 1), Pr(hitting Target 2)]

The reason for the strict inequality is that we theoretically have no zero values in the Hitting-Missing and Missing-Hitting cells in the two-way table in Figure 22. As a consequence of this inequality, the n value which satisfies both Pr(hitting Target 1) $\geq$ 0.9 and Pr(hitting Target 2) $\geq$ 0.9 is, in general, an under estimate of the true n value which satisfies Pr(hitting both targets) $\geq$ 0.9.

One last comment: Everything developed so far in this chapter is applicable to point targets. A point target is a special case of rectangular target when $T = T' = 0$.

5. The Probability of Achieving the Maximum Possible Coverage on Both Targets

In this section, we shall answer Question (5) given in Chapter I, Section 1, namely, "What is the probability of achieving the maximum possible coverage on both targets?" When a rectangular pattern is delivered on two rectangular targets, the maximum possible coverage on

Target 1, call it MPC1, is given by

$$\text{MPCL} = \min(2T_1,\ 2P)\cdot\min(2T_1',\ 2P') = (S_1-R_1)\cdot(S_1'-R_1'). \qquad (7.20)$$

This relationship is implied in Gay and Weeks (1973). The probability of achieving MPC1 may be found as follows:

$$\Pr[\text{achieving MPC1}] = \Pr[Z = (S_1-R_1)\cdot(S_1'-R_1')] = \Pr[(Y,\ Y')\varepsilon J_1]$$

$$= \int_{J_1}\int f(y,\ y')\ dy\ dy' \qquad (7.21)$$

where region J_1 is defined in Figure 25.

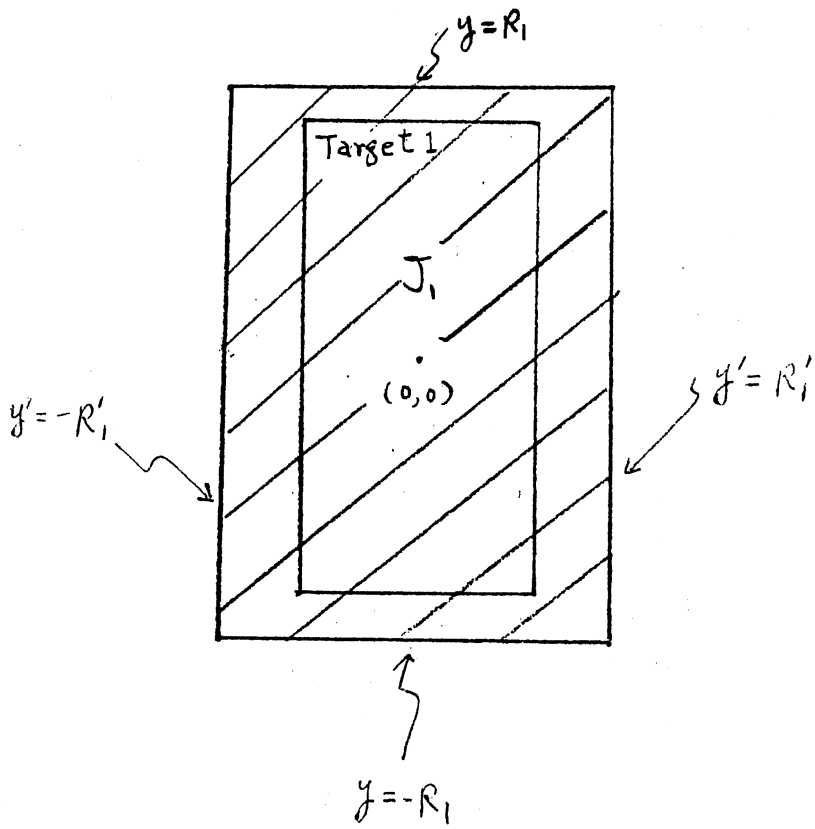

Figure 25. The Region Corresponding to the Event "Achieving MPC1"

We note the similarity between the boundaries of J_1 and the boundaries of K_1 defined in Figure 16. As a matter of fact, both are limits of the boundaries of the region D defined in Figure 13. If we set $(\theta, \theta') = (0, 0)$ in Figure 13, then it is not difficult to verify that K_1 is the limit of D when $v \to 0$, and J_1 is the limit of D when $v \to (S_1-R_1)\cdot(S_1'-R_1')$. Using these as the boundaries of J_1 in (7.21), we have:

$$\Pr[\text{achieving MPC1}] = \int_{-R_1}^{R_1} f(y)\, dy \cdot \int_{-R_1'}^{R_1'} f(y')\, dy'$$

$$= [G(R_1-\mu)-G(-R_1-\mu)]\cdot[G(R_1'-\mu')-G(-R_1'-\mu')]$$

By the same token, we can construct a region J_2 for Target 2 and find

$$\Pr[\text{achieving MPC2}] = \iint_{J_2} f(y, y')\, dy\, dy' = \int_{\theta_2-R_2}^{\theta_2+R_2} f(y)\, dy \cdot$$

$$\int_{\theta_2'-R_2'}^{\theta_2'+R_2'} f(y')\, dy'$$

$$= [G(\theta_2+R_2-\mu)-G(\theta_2-R_2-\mu)]\cdot[G(\theta_2'+R_2'-\mu')-G(\theta_2'-R_2'-\mu')]$$

where (θ_2, θ_2') is the center of Target 2.

Consider now the intersection $J_1 \cap J_2$ of the regions J_1 and J_2. This $J_1 \cap J_2$ region is the one which, when we integrate $f(y, y')$ over it, will give us the probability of achieving the maximum coverage on both targets. Figure 26 shows J_1, J_2, and $J_1 \cap J_2$.

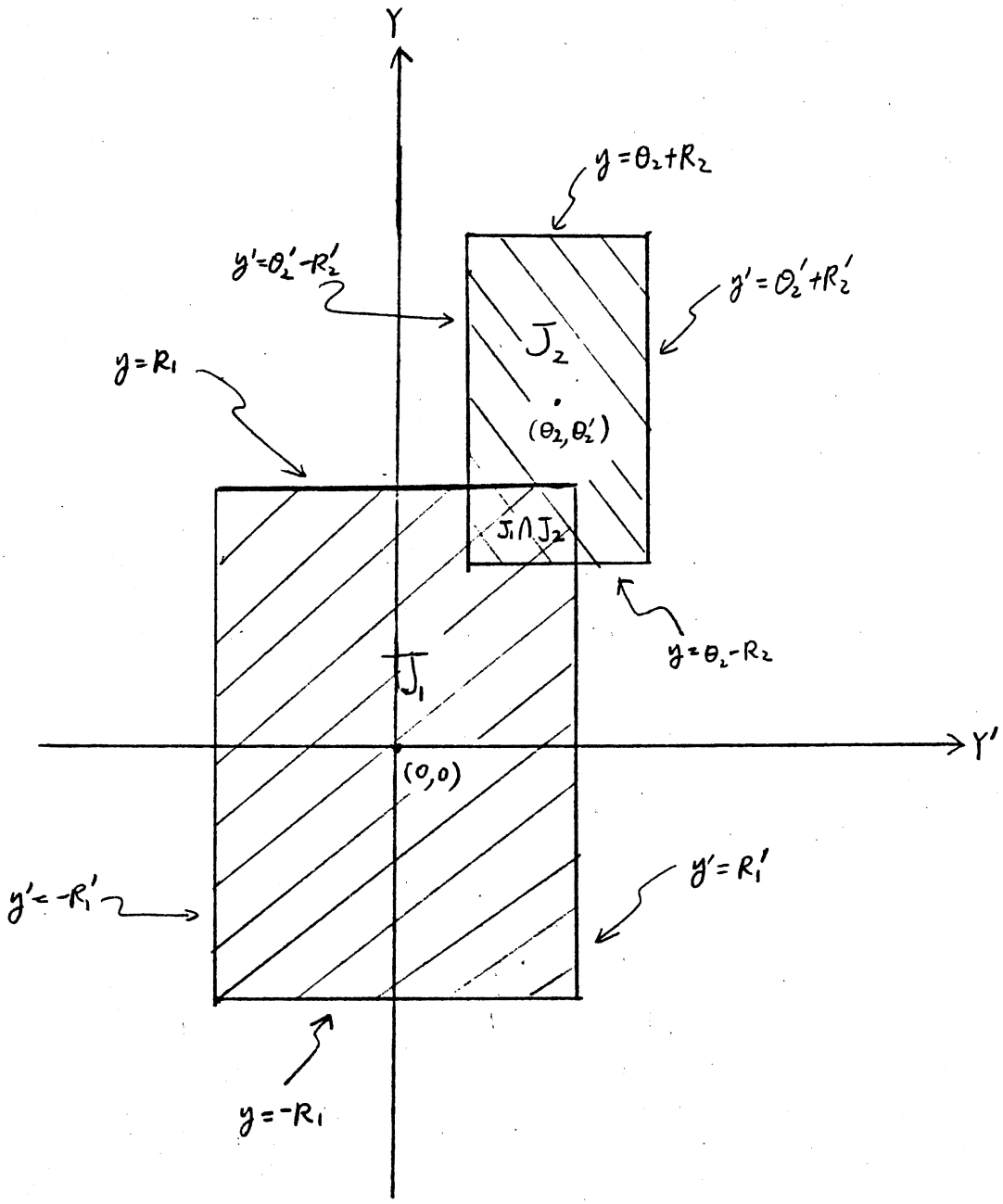

Figure 26. The Region Corresponding to the Event "Achieving MPC on Both Targets"

Thus,

$$\Pr(\text{achieving MPC on both targets}) = \iint_{J_1 \cap J_2} f(y, y')\, dy\, dy' \qquad (7.22)$$

The problem again amounts to finding the correct boundaries for the region $J_1 \cap J_2$.

Although we could have followed the same route in finding $K_1 \cap K_2$ in Section 1 of this chapter, working things out case by case, we would like to try a different and <u>better</u> approach here.

Let us define

$$x = \max(-R_1, \theta_2 - R_2), \qquad (7.23)$$

$$w = \min(R_1, \theta_2 + R_2), \qquad (7.24)$$

$$OP = \text{Overlap of } J_1 \text{ and } J_2 \text{ in the range direction}, \qquad (7.25)$$

then

$$OP = \begin{cases} [x, w] & \text{if } w - x > 0 \\ 0 & \text{if } w - x \leq 0 \end{cases} \qquad (7.26)$$

where $[x, w]$ is understood to be the closed interval from x to w. Similarly, if we define

$$x' = \max(-R_1', \theta_2' - R_2'), \qquad (7.27)$$

$$w' = \min(R_1', \theta_2' + R_2'), \qquad (7.28)$$

$$OP' = \text{Overlap of } J_1 \text{ and } J_2 \text{ in the deflection direction}, \qquad (7.29)$$

then

$$OP = \begin{cases} [x', w'] & \text{if } w' - x' > 0 \\ 0 & \text{if } w' - x' \leq 0. \end{cases} \qquad (7.30)$$

The intersection of J_1 and J_2 is the product of the overlap of J_1 and J_2 in the range direction and the overlap of J_1 and J_2 in the deflection direction. Thus, expression (7.22) becomes

$$\Pr(\text{achieving MPC on both targets}) = \iint_{J_1 \cap J_2} f(y, y')\, dy\, dy'$$

$$= \iint_{OPxOP'} f(y, y')\, dy\, dy'$$

$$\simeq \begin{cases} \int_x^w f(y)\, dy \cdot \int_{x'}^{w'} f(y')\, dy' = [G(w-\mu)-G(x-\mu)]\cdot[G(w'-\mu')-G(x'-\mu')] & \text{if } w-x > 0 \text{ and } w'-x' > 0 \\ 0 & \text{otherwise} \end{cases} \tag{7.31}$$

where w, x, w', and x' are defined in (7.23), (7.24), (7.27), and (7.28) respectively. Again we have a closed form answer for Question (5).

Thus we have answered Questions (1) through (5) which are stated in Chapter I, Section 1. The "Two-way Table Method" is a handy device with which to obtain answer to Questions (2), (3), (4) by using the answer to Question (1).

In the next chapter, we are going to continue the unfinished task left from Chapter VI and given an approximation of the joint c.d.f. of two rectangular coverages.

CHAPTER VIII

AN APPROXIMATION OF THE JOINT C.D.F. OF TWO RECTANGULAR COVERAGES

Recall that the main obstacle we encountered in trying to obtain the joint c.d.f. there, was the shape of the intersection of regions D_1 and D_2 as illustrated in Figure 14. The difficulty arises because of the curved portions of the boundaries of D_1 and D_2.

Now suppose we approximate both D_1 and D_2 with rectangular regions by removing the curve from each of the four corners and extending the four boundary segments on each. To illustrate this, we reproduce Figure 14 with the proposed approximations shown in Figure 27. We note that the intersection of these two rectangular approximations is a rectangle too. This is the reason why we choose the rectangular approximation.

Now let the rectangular approximations of D_1 and D_2 be denoted by $D_1{*}$ and $D_2{*}$ respectively. The approximation we propose is to evaluate

$$\iint_{D_1 \cap D_2} f(y, y')\, dy\, dy' \tag{8.1}$$

by

$$\iint_{D_1{*} \cap D_2{*}} f(y, y')\, dy\, dy'. \tag{8.2}$$

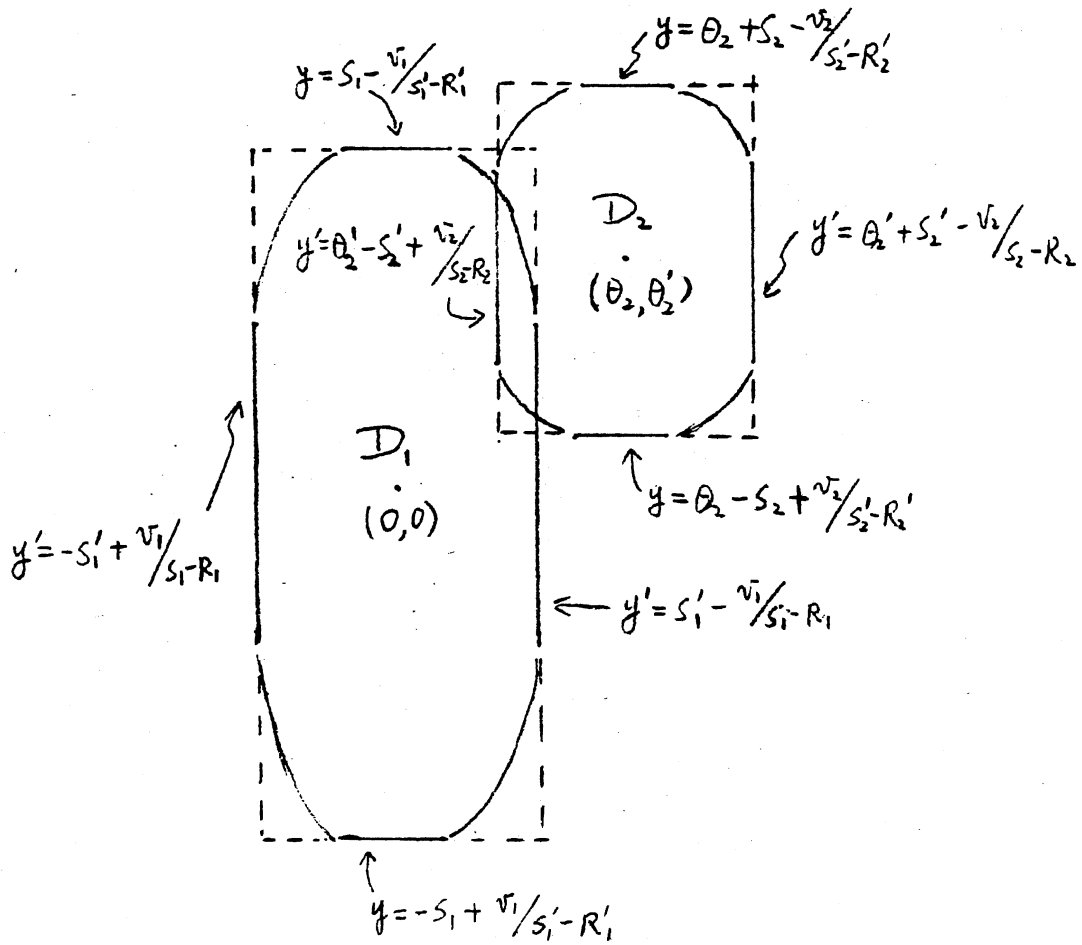

Figure 27. Approximating D_1 and D_2 by Two Rectangles

This in turn implies that the joint c.d.f. of two rectangular coverages expressed in (6.3) is approximated by $F^*_{Z_1, Z_2}(v_1, v_2)$ as follows:

$$F^*_{Z_1, Z_2}(v_1, v_2) = 1 - \Big[\iint_{D_1} f(y, y')\, dy\, dy' + \iint_{D_2} f(y, y')\, dy\, dy'$$

$$- \int_{D_1^* \cap D_1^*} \int f(y, y')\, dy\, dy'$$

$$\text{for } 0 \le v_1 < (S_1 - R_1)(S_1' - R_1') \text{ and}$$
$$0 \le v_2 < (S_2 - R_2)(S_2' - R_2') . \qquad (8.3)$$

The terms

$$\iint_{D_1} f(y, y')\, dy\, dy' \quad \text{and} \quad \iint_{D_2} f(y, y')\, dy\, dy'$$

have been expressed explicitly in (6.4) and (6.5). As for the last term in (8.3), the integration is performed over the intersection of the two rectangles. By using the same approach we used to obtain (7.31) in Chapter VII, Section 5, we find that

$$\int_{D_1^* \cap D_2^*} \int f(y, y')\, dy\, dy' = \begin{cases} [G(Q-\mu) - G(E-\mu)] \cdot [G(Q'-\mu') - G(E'-\mu')] & \\ \qquad\qquad \text{if } Q-E > 0 \text{ and } Q'-E' > 0 & \\ 0 \qquad\qquad \text{otherwise} & \end{cases} \qquad (8.4)$$

where $E = \max\left(-S_1 + {}^{v_1}/_{S_1'-R_1'},\ \theta_2 - S_2 + {}^{v_2}/_{S_2'-R_2'}\right)$

$Q = \min\left(S_1 - {}^{v_1}/_{S_1'-R_1'},\ \theta_2 + S_2 - {}^{v_2}/_{S_2'-R_2'}\right)$

$E' = \max\left(-S_1' + {}^{v_1}/_{S_1-R_1},\ \theta_2' - S_2' + {}^{v_2}/_{S_2-R_2}\right)$

and $Q' = \min\left(S_1' - {}^{v_1}/_{S_1-R_1},\ \theta_2' + S_2' - {}^{v_2}/_{S_2-R_2}\right)$.

Thus, the substitution of (8.4) into (8.3) will give us the approximation part of the c.d.f. of two rectangular coverages. This, together with the exact part of the c.d.f. expressed in (6.3a), gives us the following:

$$F^*_{Z_1,\, Z_2}(v_1, v_2)$$

$$= \begin{cases} 1-\iint_{D_1} f(y, y')dy\, dy' - \iint_{D_2} f(y, y')dy\, dy' + [G(Q-\mu)-G(E-\mu)]\cdot [G(Q'-\mu')-G(E'-\mu')] \\ \quad \text{for } 0 \le v_1 < (S_1-R_1)(S_1'-R_1') \text{ and } 0 \le v_2 < (S_2-R_2)\cdot(S_2'-R_2') \\ \quad \text{and if } Q-E > 0 \text{ and } Q'-E' > 0 \\ 1-\iint_{D_1} f(y, y')dy\, dy' - \iint_{D_2} f(y, y')dy\, dy' \\ \quad \text{for } 0 \le v_1 < (S_1-R_1)(S_1'-R_1') \text{ and } 0 \le v_2 < (S_2-R_2)(S_2'-R_2') \\ \quad \text{and if } Q-E \le 0 \text{ or } Q'-E' \le 0 \\ 1-\iint_{D_1} f(y, y')dy\, dy' \\ \quad \text{for } 0 \le v_1 < (S_1-R_1)(S_1'-R_1') \text{ and } v_2 \ge (S_2-R_2)(S_2'-R_2') \\ 1-\iint_{D_2} f(y, y')dy\, dy' \\ \quad \text{for } v_1 \ge (S_1-R_1)(S_1'-R_1') \text{ and } 0 \le v_2 < (S_2-R_2)(S_2'-R_2') \\ 0 \quad \text{for } v_1 < 0 \text{ or } v_2 < 0 \\ 1 \quad \text{for } v_1 \ge (S_1-R_1)(S_1'-R_1') \text{ and } v_2 \ge (S_2-R_2)(S_2'-R_2') \end{cases} \tag{8.5}$$

where E, Q, E', and Q' are as defined in (8.4).

We note that

$$F^*_{Z_1,\ Z_2}(v_1,\ v_2) \geq F_{Z_1,\ Z_2}(v_1,\ v_2).$$

This approximation, in our opinion, is on the right side of the true value, since the event "$Z_1 \leq v_1$ and $Z_2 \leq v_2$" is an undesirable event and it is safer to over estimate the probability of an undesirable event than to under estimate it.

It may happen that we are more interested in the joint probability of covering at least a certain area of Target 1 and covering at least a certain area of Target 2. This means that instead of $\Pr(Z_1 \leq v_1,\ Z_2 \leq v_2)$, $\Pr(Z_1 \geq v_1,\ Z_2 \geq v_2)$ is the thing that is more useful for us to find, like Question (6) given in Chapter 1, Section 1. This probability is evaluated by expression (8.1) and approximated by expression (8.2) for $0 < v_1 \leq (S_1-R_1)(S_1'-R_1')$ and $0 < v_2 \leq (S_2-R_2)(S_2'-R_2')$. For $(v_1,\ v_2)$ not belonging to this region, the probability can be obtained in exact form. Together, the following formula gives us an approximation:

$$
\Pr^*(Z_1 \geq v_1,\ Z_2 \geq v_2)
$$

$$
= \begin{cases}
[G(Q-\mu)-G(E-\mu)]\cdot[G(Q'-\mu')-G(E'-\mu')] \\
\quad \text{for } 0 < v_1 \leq (S_1-R_1)(S_1'-R_1') \text{ and } 0 < v_2 \leq (S_2-R_2)(S_2'-R_2') \\
\quad \text{and if } Q-E > 0 \text{ and } Q'-E' > 0 \\
0 \quad \text{for } 0 < v_1 \leq (S_1-R_1)(S_1'-R_1') \text{ and } 0 < v_2 \leq (S_2-R_2)(S_2'-R_2') \\
\quad \text{and if } Q-E \leq 0 \text{ or } Q'-E' \leq 0 \\
\iint_{D_1} f(y, y')\, dy\, dy' \\
\quad \text{for } 0 < v_1 \leq (S_1-R_1)(S_1'-R_1') \text{ and } v_2 \leq 0 \\
\iint_{D_2} f(y, y')\, dy\, dy' \\
\quad \text{for } v_1 \leq 0 \text{ and } 0 < v_2 \leq (S_2-R_2)(S_2'-R_2') \\
1 \quad \text{for } v_1 \leq 0 \text{ and } v_2 \leq 0 \\
0 \quad \text{for } v_1 > (S_1-R_1)(S_1'-R_1') \text{ or } v_2 > (S_2-R_2)(S_2'-R_2').
\end{cases}
\tag{8.6}
$$

Again, $\Pr^*(Z_1 \geq v_1,\ Z_2 \geq v_2) \geq \Pr(Z_1 \geq v_1,\ Z_2 \geq v_2)$. However, this approximation is on the wrong side of the true value. Since the event "$Z_1 \geq v_1$ and $Z_2 \geq v_2$" is a desirable event.

To conclude, we have given approximations to both the joint c.d.f. of two rectangular coverages and the joint probability of the event "$Z_1 \geq v_1$ and $Z_2 \geq v_2$."

CHAPTER IX

EXTENTION TO M RECTANGULAR TARGETS

The results obtained in all the previous chapters can be extended to the case of m targets ($m > 2$). This is possible due to the approach we developed in finding the intersection of two rectangles in Chapter VII, Section 5. For example, consider the case where a rectangular pattern is delivered on <u>three</u> rectangular targets. The probability of hitting all three targets can be obtained by integrating $f(y, y')$ over the intersection of K_1, K_2, and K_3 as shown on the diagram in Figure 28. (θ_3, θ_3') there is the center of Target 3 and $S_3 = T_3+P$, $S_3' = T_3'+P'$. We note that the diagram in Figure 28 is an extension of the diagram in Figure 17.

The intersection, $K_1 \cap K_2 \cap K_3$, is a rectangle again. This rectangle is the product of the overlap of the three segments in the range direction and the overlap of the three segments in the deflection direction. In the range direction, the three segments involved are $[-S_1, S_1]$, $[\theta_2-S_2, \theta_2+S_2]$, and $[\theta_3-S_3, \theta_3+S_3]$. To find the overlap of them, we follow the method we used in Chapter VII, Section 5 and define

$$\mathcal{X} = \max(-S_1, \theta_2-S_2, \theta_3-S_3), \text{ and}$$

$$\mathcal{Y} = \min(S_1, \theta_2+S_2, \theta_3+S_2). \tag{9.1}$$

If we let the overlap in the range direction be denoted by OP, then

$$OP = \begin{cases} [\mathcal{X}, \mathcal{Y}] & \text{if } \mathcal{Y} - \mathcal{X} > 0 \\ 0 & \text{otherwise.} \end{cases} \tag{9.2}$$

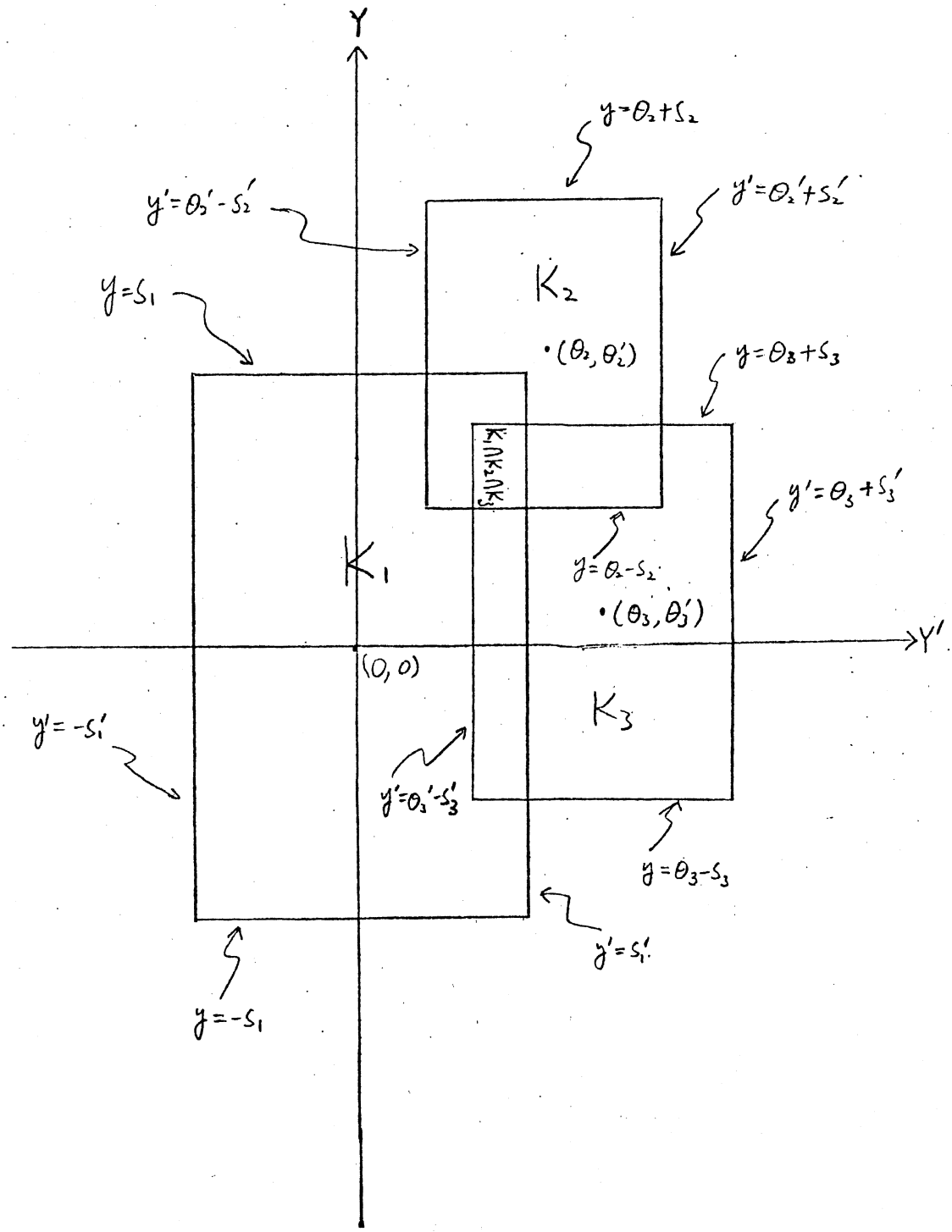

Figure 28. The Rectangle Corresponding to the Event "Hitting All Three Targets"

Similarly, we can obtain the overlap of the three segments in the deflection direction, $[-S_1', S_1']$, $[\theta_2'-S_2', \theta_2'+S_2']$ and $[\theta_3'-S_3', \theta_3'+S_3']$, as

$$OP' = \begin{cases} [\varkappa', \gamma'] & \text{if } \gamma' - \varkappa' > 0 \\ 0 & \text{otherwise,} \end{cases} \tag{9.3}$$

where $\varkappa'$ and γ' are defined as the counterparts of $\varkappa$ and γ for the deflection direction. Thus we find

$$K_1 \cap K_2 \cap K_3 = OP \times OP'$$

$$= \begin{cases} [\varkappa, \gamma] \times [\varkappa', \gamma'] & \text{if } \gamma - \varkappa > 0 \text{ and } \gamma' - \varkappa' > 0 \\ 0 & \text{otherwise.} \end{cases}$$

Returning to our original problem, we find

$$\Pr(\text{hitting all three targets}) = \int\int_{K_1 \cap K_2 \cap K_3} f(y, y')dy\, dy' = \int\int_{OP \times OP'} f(y, y')\, dy\, dy'$$

$$= \begin{cases} \int_{\varkappa}^{\gamma} f(y)dy \cdot \int_{\varkappa'}^{\gamma'} f(y')dy' = [G(\gamma-\mu)-G(\varkappa-\mu)]\cdot[G(\gamma'-\mu)-G(\varkappa'-\mu')] & \\ \quad \text{if } \gamma - \varkappa > 0 \text{ and } \gamma' - \varkappa' > 0 & \\ 0 \quad \text{otherwise.} \end{cases} \tag{9.4}$$

The nice thing about this approach is that it can be easily extended to any number of targets. In the general case of m targets, we only have to redefine

$$\varkappa = \max(-S_1, \theta_2-S_2, \ldots \theta_m-S_m)$$
$$\gamma = \min(S_1, \theta_2+S_2, \ldots \theta_m+S_m). \tag{9.5}$$

The rest of the derivation is exactly the same and we still end up with formula (9.4) as Pr(hitting all m targets).

We recall that the Pr(achieving MPC on both targets) in Chapter VII,

Section 5, and the approximation of the $Pr(Z_1 \geq v_1, Z_2 \geq v_2)$ in Chapter VIII were both obtained by integrating $f(y, y')$ over the intersection of two rectangles. In the case of m rectangular targets, the problem also amounts to finding the intersection of m rectangles, the mechanism of which has been illustrated above. Once the intersection, always a rectangle, is found, the integration over it causes no difficulty.

To extend the approximation of the joint c.d.f. of rectangular coverages from two to m targets is a little bit more tedious, but still feasible. We shall illustrate it by first considering $m = 3$. Similar to the diagram in Figure 27, we shall this time have D_1, D_2, and D_3. The exact joint c.d.f. is expressed in the following formula:

$$F(v_1, v_2, v_3) = Pr(Z_1 \leq v_1, Z_2 \leq v_2, Z_3 \leq v_3)$$

$$= 1 - \int\int_{D_1 \cup D_2 \cup D_3} f(y, y')\, dy\, dy'. \tag{9.6}$$

The "Principle of Inclusion and Exclusion", can be used to express the union, $D_1 \cup D_2 \cup D_3$, as the sum of intersections. That is

$$D_1 \cup D_2 \cup D_3 = D_1 + D_2 + D_3 - (D_1 \cap D_2) - (D_1 \cap D_3) - (D_2 \cap D_3) + (D_1 \cap D_2 \cap D_3) \tag{9.7}$$

where the symbol "+" and "-" are defined in Berman and Fryer (1972, pp. 60-61). For example, A+B represents the totality of elements in A and B (with repeats counted).

There are at least two approximations we can use for (9.7):

(1) $$D_1^* + D_2^* + D_3^* - (D_1^* \cap D_2^*) - (D_1^* \cap D_3^*) - (D_2^* \cap D_3^*) + (D_1^* \cap D_2^* \cap D_3^*) \tag{9.8}$$

or

(2) $$D_1 + D_2 + D_3 - (D_1^* \cap D_2^*) - (D_1^* \cap D_3^*) - (D_2^* \cap D_3^*) - (D_1^* \cap D_2^* \cap D_3^*) \tag{9.9}$$

where D_1^*, D_2^*, and D_3^* are rectangular approximations of D_1, D_2, and D_3 respectively.

When we substitute (9.8) into (9.6), we have

$$F^*(v_1, v_2, v_3) = 1-[\iint_{D_1^*} + \iint_{D_2^*} + \iint_{D_3^*} - \iint_{D_1^*\cap D_2^*} - \iint_{D_1^*\cap D_3^*} - \iint_{D_2^*\cap D_3^*} + \iint_{D_1^*\cap D_2^*\cap D_3^*}] \tag{9.10}$$

where $\iint_A$ is a short hand notation for $\iint_A f(y, y')\, dy\, dy'$.

Now the mechanics of finding the intersection of rectangles can be utilized to handle the last four terms in (9.10). An approximation for the joint c.d.f. of three rectangular coverages is thus obtained.

Since expression (9.8) is equivalent to $D_1^* \cup D_2^* \cup D_3^*$, of which $D_1 \cup D_2 \cup D_3$ is a subset, we shall have

$$F^*(v_1, v_2, v_3) \leq F(v_1, v_2, v_3).$$

Unfortunately, this approximation is on the wrong side of the true value.

When we use the second approximation, expressed in (9.9), for $D_1 \cup D_2 \cup D_3$ in (9.6), the relationship between F* and F is not at all clear. We may have

$$F^*(v_1, v_2, v_3) \leq F(v_1, v_2, v_3),$$

$$\text{or} \quad F^*(v_1, v_2, v_3) \geq F(v_1, v_2, v_3).$$

Our inclination is to recommend the second approximation since we have

a chance to be on the right side in this approximation. That is

$$F^*(v_1, v_2, v_3) = 1 - \left[\iint_{D_1} + \iint_{D_2} + \iint_{D_3} - \iint_{D_1^* \cap D_2^*} - \iint_{D_1^* \cap D_3^*} - \iint_{D_2^* \cap D_3^*} + \iint_{D_1^* \cap D_2^* \cap D_3^*}\right]. \tag{9.11}$$

In the general case of m rectangular targets, the joint c.d.f. of m rectangular coverages is given by

$$F(v_1, v_2, \ldots, v_m) = 1 - \iint_{D_1 \cup D_2 \cup \ldots \cup D_m} f(y, y')\, dy\, dy'. \tag{9.12}$$

By using the "Principle of Inclusion and Exclusion", we can always express the union as the sum of intersections; namely

$$D_1 \cup D_2 \ \ldots \cup D_m = \sum_{i=1}^{m} D_i - \sum_{i<j} (D_i \cap D_j) + \sum_{i<j<k} (D_i \cap D_j \cap D_k) - \ldots + (-1)^{m+1} (D_1 \cap D_2 \cap \ldots \cap D_m). \tag{9.13}$$

We may use

$$\sum_{i=1}^{m} D_i - \sum_{i<j} (D_i^* \cap D_j^*) + \sum_{i<j<k} (D_i^* \cap D_j^* \cap D_k^*) - \ldots + (-1)^{m+1} (D_1^* \cap D_2^* \cap \ldots \cap D_m^*)$$

to approximate (9.13) and then substitute it into (9.12) to get $F^*(v_1, v_2 \ldots v_m)$.

In the next chapter, we shall have more to say about the possible future studies based on the results obtained in this chapter.

CHAPTER X

SUMMARY AND POSSIBLE EXTENSIONS

1. Summary

The purpose of this study was to find the joint distribution of the coverages on two rectangular targets by one rectangular pattern. Following a natural order of development, we have derived the c.d.f. and the p.d.f. of one linear coverage, the c.d.f. and the p.d.f. of one rectangular coverage, the joint c.d.f. and the joint p.d.f. of two linear coverages, an approximation of the joint c.d.f. of two rectangular coverages. Also, we have found the joint probabilities of some interesting events, e.g., the probability of hitting both targets; missing both targets, etc. A Two-Way Table Method was introduced to find the probabilities of some other interesting events, once the probability of hitting both targets is obtained. A "power up" formula was given to extend the two-way table to $n (n > 2)$ identical or non-identical patterns. The question of "the fewest number of passes required to achieve a specified probability of hitting both targets" is investigated, and a formula which can be solved iteratively is given to give the answer to this question.

A way to extend this study to handle the general case of m rectangular targets is outlined in the last chapter. This is possible due to the simple mechanism we developed to find the overlap of m line segments.

2. Possible Extensions

One Target Being a Subset of Another Target

All through this study, we have assumed the separation of the two targets under consideration. The situation that one target is a subset of another target may arise in the following way. We have a single target, but a small portion of it is the "heart" of this target. Consequently, we like to treat this portion differently, e.g., we want to have a higher fractional coverage on this portion than on the rest of the target. Figure 29 illustrates this situation:

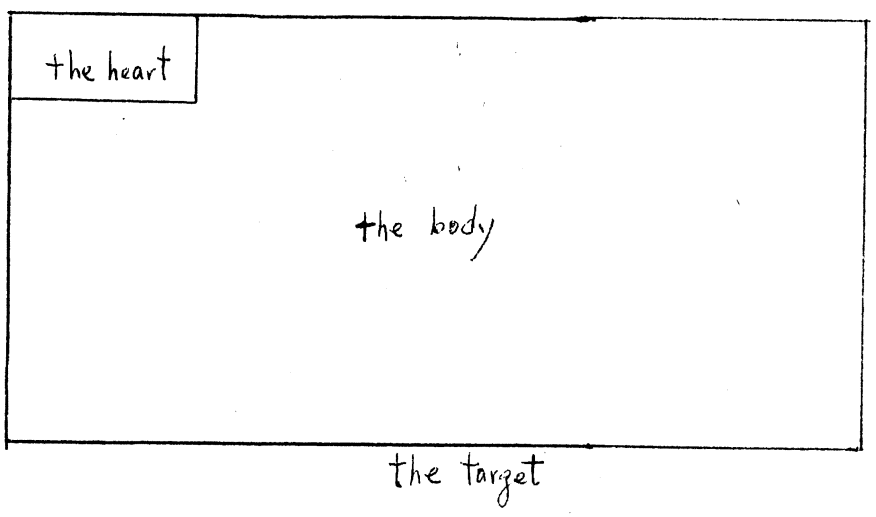

Figure 29. The Heart Is More Important than the Body

Strictly speaking, we should consider this situation as if we have two targets, with the "heart" being of the shape  and the "body" being of the shape 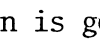 . It can be seen immediately that this sort of rigorous treatment will vastly complicate the calculation of almost any joint probability. To avoid this complication, we may approximate the "body" by the whole target. It is in this way that we have two rectangular targets with one being a subset of the other. Of course, this approximation is good only when the "heart" is a <u>small</u> portion of the target.

Once we have two rectangular targets, we can construct rectangles around them corresponding to the desired joint probability statement and find (or approximate) the probability just like the way we did it all along.

More about the Case of m Rectangular Targets

The theory and material about the case of m rectangular targets developed in Chapter IX can be explored further. For example, when $m = 3$, we can find

Pr(hitting Target 1 and 2 but missing Target 3)

$$= \iint_{K_1 \cap K_2} - \iint_{K_1 \cap K_2 \cap K_3}$$

and

Pr(hitting only two targets)

$$= \iint_{K_1 \cap K_2} + \iint_{K_1 \cap K_3} + \iint_{K_2 \cap K_3} - 3 \iint_{K_1 \cap K_2 \cap K_3} .$$

In this direction, many useful questions can be asked and answered in the general case of m rectangular targets. It is even possible to develop an "M-way Table Method" analogous to the Two-way Table Method we illustrated in Chapter VII. We leave this to the hands of future researchers in this field.

To Increase the Number of Patterns

In the context of "Hitting or Missing", there is no problem in handling the case of n rectangular patterns, as has been demonstrated in Chapter VII, Section 3. But in the general context of the c.d.f., it is very difficult to handle even two linear patterns delivered on one linear target. For one thing, we have the overlap of Pattern 1 and Pattern 2 to worry about. For another, there are uncountably infinite ways that we can combine coverages by Pattern 1 and Pattern 2 to satisfy the event "$C \leq u$." We believe a different approach other than that developed in this study is needed.

A SELECTED BIBLIOGRAPHY

(1) Ash, R.B. Basic Probability Theory. New York: John Wiley & Sons, Inc., 1970.

(2) Berman G. and K.D. Fryer. Introduction to Combinatorics. New York: Academic Press, 1972.

(3) Chen, P.L., D.L. Weeks and W.L. Gay. "Expected Fractional Coverage and Expected Overall Damage in Multiple Pass Situations." A Technical Report submitted through the JTCG Contract with Oklahoma State University, Stillwater, Oklahoma, 1975.

(4) Gay, W.L. and D.L. Weeks. "Calculation of Finite Size Pattern and Target Rectangle Coverage Assuming the Aiming Errors are Distributed According to the Bivariate Normal Distribution." A Technical Report submitted through the JTCG Contract with Oklahoma State University, Stillwater, Oklahoma, 1973.

(5) Heiser, R.F. "Coverage Distributions Associated with Three Rectangular Regions". (Unpublished Ph.D. Thesis, Oklahoma State University, Stillwater, Oklahoma, 1971).

(6) Hogg, R.V. and A.T. Craig. Introduction to Mathematical Statistics. 3rd Ed. New York: Macmillan, 1970.

(7) Matrix Evaluator Computer Program - User and Analyst Manual. 61 JTCG/ME-72-11 Joint Technical Coordinating Group for Munitions Effectiveness. Washington, D.C.: Air Force OC, May 25, 1974.

(8) Maudlin, C. "The Geneology of Expected Fractional Coverage of a Rectangular Target by a Rectangular Pattern." A rough draft of a Technical Report to be submitted through the JTCG Contract with Oklahoma State University, Stillwater, Oklahoma, 1974.

(9) Norton, J.M. and D.L. Weeks. "Calculation and Suggested Approximations of Expected Fractional Coverage, Assuming Various Distribution of Aiming Error." A Technical Report submitted through the JTCG Contract with Oklahoma State Univeristy, Stillwater, Oklahoma, 1974.

(10) Snow, R. and M. Ryan. "A Simplified Weapons Evaluation Model." Santa Monica, California: The Rand Corporation, RM-5677-1-PR, 1970.

(11) Walburg, M.W. "Open End Procedures to Calculate Single and Multiple Pass Expected Fractional Coverage in One Dimension." Saint Paul, Minnesota: Biocentrics Incorporated, 1974.

APPENDIX

A NUMERICAL EXAMPLE OF THE JOINT PROBABILITY OF TWO RECTANGULAR COVERAGES

At the end of Chapter VII, we claimed that when the numerical values of the target-pattern configuration are given, it is straightforward but tedious to find the exact joint probability of two rectangular coverages for any specified v_1 and v_2 values. In this Appendix we shall illustrate how this can be done in an example.

Let us consider the following configuration of one rectangular pattern being delivered on two rectangular targets:

L_{T_1} = length of Target 1 in the range direction = 50

L'_{T_1} = length of Target 1 in the deflection direction = 20

L_{T_2} = length of Target 2 in the range direction = 50

L'_{T_2} = length of Target 2 in the deflection direction = 20

β_2 = center of Target 2 in the range direction = 0

β'_2 = center of Target 2 in the deflection direction = 35

L_P = length of the pattern in the range direction = 70

L'_P = length of the pattern in the deflection direction = 40

M = aimpoint in the range direction = 0

M' = aimpoint in the deflection direction = 17.5

σ = aiming error in the range direction = 20

σ' = aiming in the deflection direction = 10.

As usual, we designate the center of Target 1 as the center of the Cartesian coordinate system, (0, 0). Now using the definitions in Chapter II, we shall have:

T_1 = 1.25

T_1' = 1

T_2 = 1.25

T_2' = 1

θ_2 = 0

θ_2' = 3.5

P = 1.75

P' = 2

μ = 0

μ' = 1.75.

Figure 30, illustrates this situation with <u>all distances standardized by the aiming errors σ and σ'</u>. The standardized areas of Target 1, Target 2, and the pattern are indicated in the bottom of each. They are:

The standardized area of Target 1 = $2T_1 x 2T_2$ = 2.5x2 = 5,

the standardized area of Target 2 = $2T_2' x 2T_2'$ = 2.5x2 = 5,

and

the standardized area of the pattern = 2Px2P' = 3.5x4 = 14.

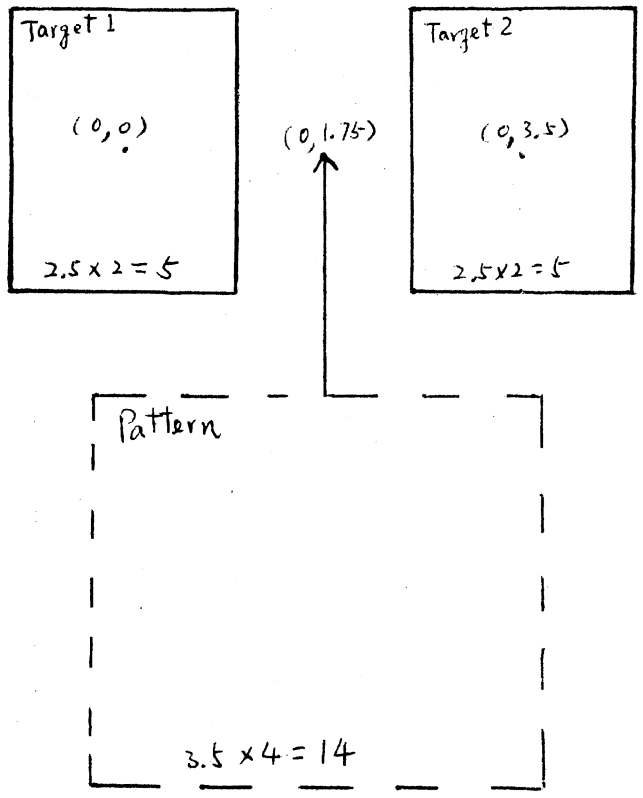

Figure 30. An Example of One Rectangular Pattern Being Delivered on Two Rectangular Targets

We note that in this configuration, two targets are of the same size and their centers line up horizontally. Also the aimpoint is placed midway between the two target centers. We did this in order to simplify the calculation of joint probabilities. In a more general configuration, the joint probabilities can be obtained in a fashion similar to what is done here in this case. The following values will also be needed.

$S_1 = T_1 + P = 3$

$S_1' = T_1' + P' = 3$

$R_1 = |T_1 - P| = 0.5$

$R_1' = |T_1' - P'| = 1$

$S_2 = T_2 + P = 3$

$S_2' = T_2' + P' = 3$

$R_2 = |T_2 - P| = 0.5$

$R_2' = |T_2' - P'| = 1.$

We shall find the joint probability of "the fractional coverage on Target 1 $\geq r_1$ and the fractional coverage $\geq r_2$" for r_1=0, $1/4$, $2/4$, $3/4$, 1 and r_2=0, $1/4$, $2/4$, $3/4$, 1. First, we express the fractional coverage r in terms of a standardized <u>area</u> v. That is

v_1 = standardized <u>area</u> of Target 1xr_1 = $5r_1$

v_2 = standardized <u>area</u> of Target 2xr_2 = $5r_2$

(Recall that the standardized area of both Target 1 and Target 2 is 5) From this relationship, we have, for example,

Pr(fractional coverage on Target 1$\geq 1/2$, fractional coverage on Target 2$\geq 1/4$)

$= \Pr(Z_1 \geq 2.5,\ Z_2 \geq 1.25)$

Thus, the problem becomes to find $\Pr(Z_1 \geq v_1,\ Z_2 \geq v_2)$ for v_1=0, 1.25, 2.5, 3.75, 5 and v_2=0, 1.25, 2.5, 3.75, 5.

Some joint probabilities can be found straightforwardly. For example,

$$\Pr(Z_1 \geq 0,\ Z_2 \geq 0) = 1$$

$$\Pr(Z_1 \geq 0,\ Z_2 \geq 2.5) = \Pr(Z_2 \geq 2.5) = 1-F_{Z_2}(2.5) \qquad \text{(A1)}$$

The last equation in (A1) is true since $\Pr(Z_2=2.5) = 0$. The value of $F_{Z_2}(2.5)$ can be obtained by using expression (3.3) directly.

Some of the joint probabilities are found by integrating $f(y, y')$ over the region $D_1 \cap D_2$. It is this region that we have to graph carefully and partition it before doing the numerical integration. Consider the $\Pr(Z_1 \geq 1.25,\ Z_2 \geq 3.75)$, for example. Corresponding to the event $Z_1 \geq 1.25$, we can construct a D_1 region around the center of Target 1. Corresponding to the event $Z_2 \geq 3.75$, we can also construct a D_2 region around the center of Target 2. The boundaries of D_1 and D_2 are well defined in Figure 13. Figure 31 shows both D_1 and D_2 and the way they intersect. Because of the symmetry, we only have to consider the upper half of $D_1 \cap D_2$. We partition it into two areas, Area 1 and Area 2 as shown in Figure 31.

The equation representing the curve on the upper right corner of the D_1 region is, by the defintion in Figure 13,

$$|y-\theta_1|\cdot|y'-\theta_1'|-S_1'|y-\theta_1|-S_1'|y'-\theta_1'|+S_1\cdot S_1' = v_1 \qquad (A_2)$$

Substituting $\theta_1=\theta_1'=0$, $S_1=3$, $S_1'=3$, and $v_1=1.25$ into (A2), we obtain:

$$y = \frac{3y'-7.75}{y'-3} .$$

Similarly, we can obtain the equation representing the curve on the left upper corner of the D_2 region:

$$y = \frac{3y'-5.25}{y'-0.5} .$$

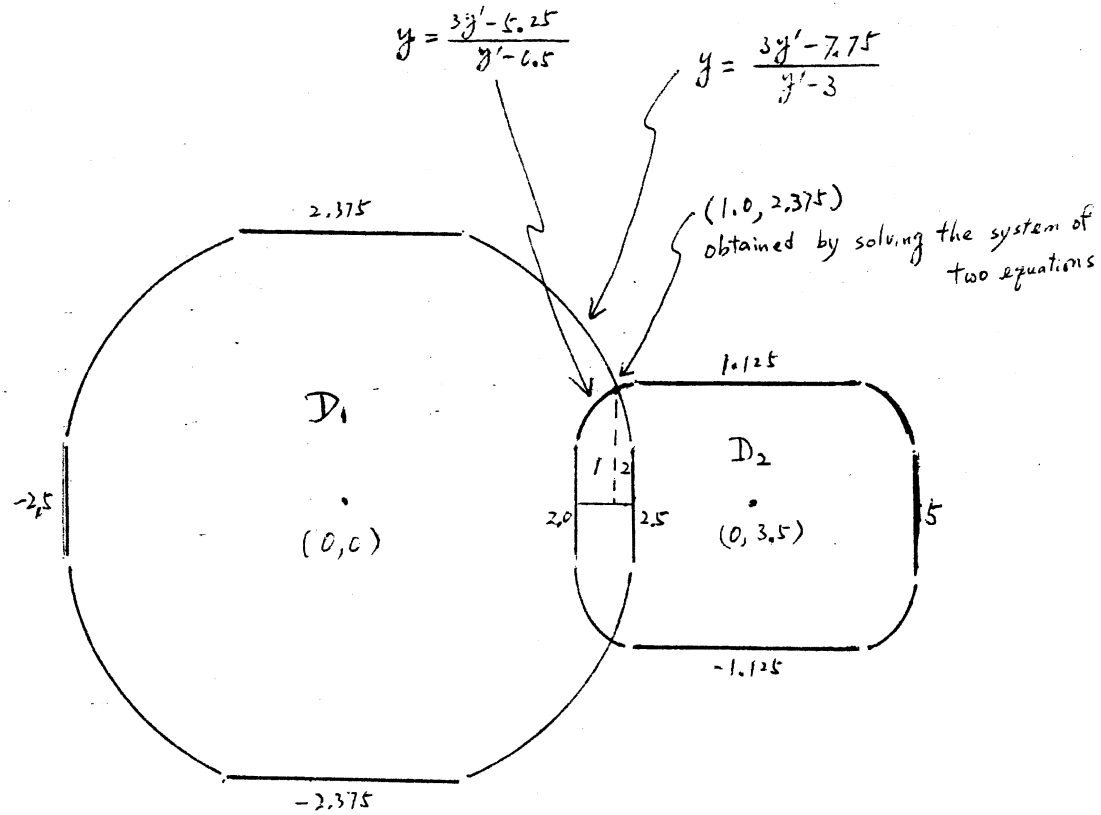

Figure 31. A Numerical Example of $D_1 \cap D_2$

We can now see that

$$\Pr(Z_1 \geq 1.25,\ Z_2 \geq 3.75) = \iint_{D_1 \cap D_2} f(y,\ y')\ dy\ dy'$$

$$= 2\left\{ \iint_{\text{Area } 1} f(y,\ y')\ dy\ dy' + \iint_{\text{Area } 2} f(y,\ y')\ dy\ dy' \right\}$$

$$= 2\left\{ \int_{2}^{2.375} \int_{0}^{\frac{3y'-5.25}{y'-0.5}} g(y)\ g(y'-1.75)\ dy\ dy' \right.$$

$$\left. + \int_{2.375}^{2.5} \int_{0}^{\frac{3y'-7.75}{y'-3}} g(y)\ g(y'-1.75)\ dy\ dy' \right\}$$

$$= 2\left\{ \int_{2}^{2.375} \left[G\left(\frac{3y'-5.25}{y'-0.5}\right) - G(0)\right] g(y'-1.75)\ dy' \right.$$

$$\left. + \int_{2.375}^{2.5} \left[G\left(\frac{3y'-7.75}{y'-3}\right) - G(0)\right] g(y'-1.75)\ dy' \right\} \qquad \text{(A3)}$$

Two numerical integrations are needed to find the values in expression (A3), which turns out to be 0.096. This is a way to find $\Pr(Z_1 \geq 1.25,\ Z_2 \geq 3.75)$, which is Pr(fractional coverage on Target $1 \geq 1/4$, fractional coverage on Target $2 \geq 3/4$).

If we use rectangles D_1^* and D_2^* to approximate D_1 and D_2, then the approximated joint probability is:

$$\Pr^*(Z_1 \geq 1.25,\ Z_2 \geq 3.75) = \iint_{D_1^* \cap D_2^*} f(y, y')\, dy\, dy'$$

$$= \int_{-1.125}^{1.125} g(y)\, dy \cdot \int_{2}^{2.5} g(y'-1.75)\, dy'$$

$$= [G(1.125)-G(-1.125)]\cdot[G(0.75)-G(0.25)]$$

$$= 0.129.$$

In this fashion, we have found both the exact and the approximated joint probabilities of "fractional coverage on Target 1 $\geq r_1$ and fractional coverage $\geq r_2$" for r_1=0, 1/4, 2/4, 3/4, 1 and r_2=0, 1/4, 2/4, 3/4, 1. TABLE II give the exact joint probabilities. FC1 in the table stands for "the fractional coverage on Target 1", and FC2 in the table stands for "the fractional coverage on Target 2." TABLE III give the <u>approximated</u> joint probabilities. AFC1 and AFC2 have the same meaning as FC1 and FC2 except the extra "A" stands for "approximated."

TABLE II

THE EXACT JOINT PROBABILITY OF
TWO FRACTIONAL COVERAGES

FC2 \ FC1	≥ 0	≥ 1/4	≥ 2/4	≥ 3/4	≥ 1
≥ 1	0.086	0.0	0.0	0.0	0.0
≥ 3/4	0.269	0.096	0.0	0.0	0.0
≥ 2/4	0.491	0.262	0.109	0.0	0.0
≥ 1/4	0.717	0.457	0.262	0.096	0.0
≥ 0	1.000	0.717	0.491	0.269	0.086

TABLE III

THE APPROXIMATED JOINT PROBABILITY OF
TWO FRACTIONAL COVERAGES

AFC2 \ AFC1	≥ 0	≥ 1/4	≥ 2/4	≥ 3/4	≥ 1
≥ 1	0.086	0.0	0.0	0.0	0.0
≥ 3/4	0.269	0.129	0.0	0.0	0.0
≥ 2/4	0.491	0.342	0.182	0.0	0.0
≥ 1/4	0.717	0.537	0.342	0.129	0.0
≥ 0	1.000	0.717	0.491	0.269	0.086

VITA

Pao-liang Chen

Candidate for the Degree of

Doctor of Philosophy

Thesis: ON THE JOINT DISTRIBUTION OF COVERAGES

Major Field: Statistics

Biographical:

Personal Data: Born in Shanghai, China, November 28, 1943, the son of Mr. and Mrs. Siang-Kang Chen.

Education: Graduated from Ti-tong High School, Taipei, Taiwan, in June, 1960; received the Bachelor of Arts degree in Chinese Literature from National Cheng-chi University, Taipie, Taiwan, in June, 1965; received the Master of Science degree in Statistics from San Diego State University, San Diego, California, in July, 1973; completed the requirements for the Degree of Doctor of Philosophy at Oklahoma State University, Stillwater, Oklahoma, in July, 1976.

Professional Experience: Chinese and History Instructor at Wen-shen Middle School, Taipei, Taiwan, 1966-1968; graduate teaching assistant at San Diego State University, San Diego, California, 1970-1973; graduate teaching assistant at Oklahoma State University, Stillwater, Oklahoma, 1973-1974; graduate research assistant at the same institution, 1974-1976; member of the American Statistical Association.

Published Report: "Expected Fractional Coverage and Expected Overall Damage in Multiple Pass Situations", with David L. Weeks and William L. Gay (August, 1975).