A TRANSISTORIZED COMPRESSING AMPLIFIER

By

GERALD LESLIE MAYFIELD, JR.

Bachelor of Science

Oklahoma State University

Stillwater, Oklahoma

1958

Submitted to the faculty of the Graduate School of
the Oklahoma State University
in partial fulfillment of the requirements
for the degree of
MASTER OF SCIENCE
May, 1958

A TRANSISTORIZED COMPRESSING AMPLIFIER

Thesis Approved:

Harold Fristoe
Thesis Adviser

Paul A. McCollum

Dean of the Graduate School

PREFACE

Since their invention, the transistors have invaded the fields of electronics by replacing vacuum tubes for many applications. This thesis is an attempt to push that invasion one step further by investigating the possibility of using transistors in automatic gain control devices for audio frequencies.

The primary objective of this thesis was to design and develop a transistorized audio compressing amplifier to be used as a remote broadcast amplifier. However, since there has been so little written in the field of transistorized automatic gain control devices for audio frequencies, it was decided to generalize the thesis somewhat by discussing several possibilities for control circuits. This was done mainly in Chapter II.

In order for a person to understand fully the contents of this thesis, a basic understanding of the principles of operation of a transistor is necessary. It is also desirable that the reader be familiar with the "r" and "h" parameters of a transistor.

The author wishes to gratefully acknowledge the encouragement and support of Dr. H. T. Fristoe. Indebtedness also is acknowledged to Professor Paul A. McCollum and to Larry LaBarth for their valuable guidance and to Therom

Randall for his assistance in wiring the various circuits. The author also wishes to express appreciation to Texas Instruments, Inc., Labco Scientific, General Electric Company, and Philco Corporation for supplying transistors, material, and data.

TABLE OF CONTENTS

LIST OF FIGURES

LIST OF FIGURES (Continued)

CHAPTER I

INTRODUCTION

There is a need arising in several industries today for a small, efficient, portable, and dependable compressing amplifier.

One of the primary uses of the compressor today is found in the broadcasting industry. For this application it is used to prevent over-driving a following stage of amplification in a chain of amplifiers. One specific application would be to use a compressor on the audio input of a transmitter. Then the output of the compressor to the transmitter would not exceed a preset value and, as a result, would modulate the transmitter 100 per cent even though the input to the compressor varied several db.

Another very important application for the compressor is in the recording industry. Here the full range of audio power is desired up to a certain level. If the audio power level, for some reason or other, rises above this point, serious distortion will occur, and the recording will be ruined. This is especially true in modern high fidelity, microgroove, disc recording. For this type of application the compressor is set so that the compression action starts just as the audio power level approaches the predetermined maximum power level and does not allow it to exceed this level.

There is a great need today for a compressing amplifier for use in the remote broadcasting field. This refers to programs that originate from sources other than the local studio. Some good examples are football and basketball games, church services, etc. Using present day remote broadcast facilities, the full services of one man are required to set up the equipment and adjust the output level of the unit during the entire program. Even with very experienced men and good equipment, the quality of a program originating from a remote source is often just mediocre.

Definitions

Before proceeding further it would be advantageous to list some basic definitions for automatic gain control devices which will help to clarify the material presented in this thesis.

Automatic gain control devices may be classified into three general divisions. They are limiting amplifiers, compressing amplifiers, and automatic gain control amplifiers. The first two types are not defined clearly, and much confusion generally arises from using the terms.

The automatic gain control amplifier, without specifying the frequency at which it is to operate, usually means an averaging of the radio frequency signal level in the intermediate frequency amplifier of an amplitude modulated signal receiver. The limiting amplifier or "limiter" usually is associated with the amplifier stage preceding the detection stage of a frequency modulated signal receiver. This "limiter" serves to limit or hold the frequency modulated signal at a constant level. This thesis is not concerned with either of these devices. They were mentioned only for purposes of clarification.

A compressing amplifier or compressor is the nomenclature generally given to automatic gain control devices operating at audio frequencies. In this thesis a compressing amplifier will be defined as (1) an amplifier, the gain of which is varied automatically to provide a controlled output for a varying range of input signal levels, i.e., the output becomes a non-linear function of the input and (2) this is done in such a manner that the amplifier will not, over the specified ranges of input level, distort the signal being amplified by the amplifier.

Figure 1 will help to clarify the first part of the definition. This is the output vs. input response curve for a compressor. It may be seen that the output is a linear function of the input up to a certain level of input signal. Beyond this point the output stays constant even as the input increases.

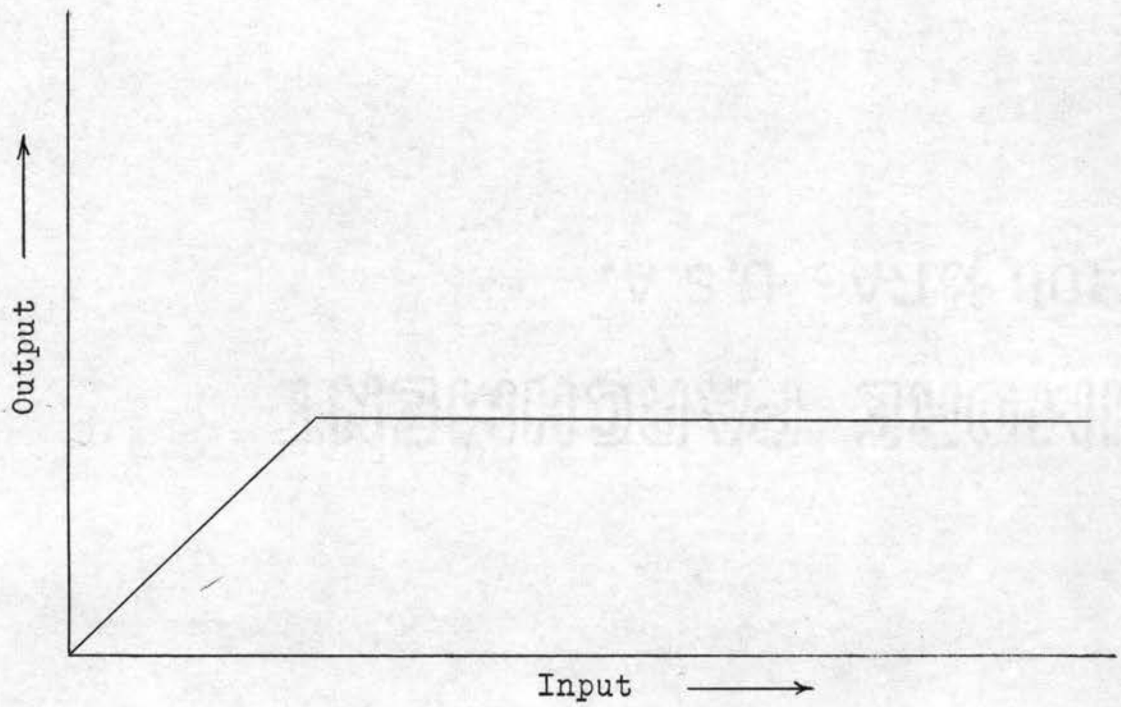

Figure 1. Compression Curve

In order to clarify the second part of the definition, consider an example where a signal was applied to an amplifier so that the output was at level "Y" in Figure 2(a). However, the maximum output that could be tolerated was a level of "X" in Figure 2, and it was necessary to prevent the output signal (a) from exceeding level "X." One method of achieving the maximum level of "X" would be to use diodes to clip off the peaks of the signal, or a second method would be to simply over-drive the amplifier so that it could not exceed the level "X." Both of these cases would produce a wave form similar to the one in Figure 2(b). This method would satisfy the first statement of the definition of a compressing amplifier since the output would not exceed a certain prescribed level "X." However, the method would not satisfy the second statement of the definition, i.e., the wave form of Figure 2(b) contains a good deal of harmonic distortion due to the clipping of the peaks of the wave. It is not a pure sine wave.

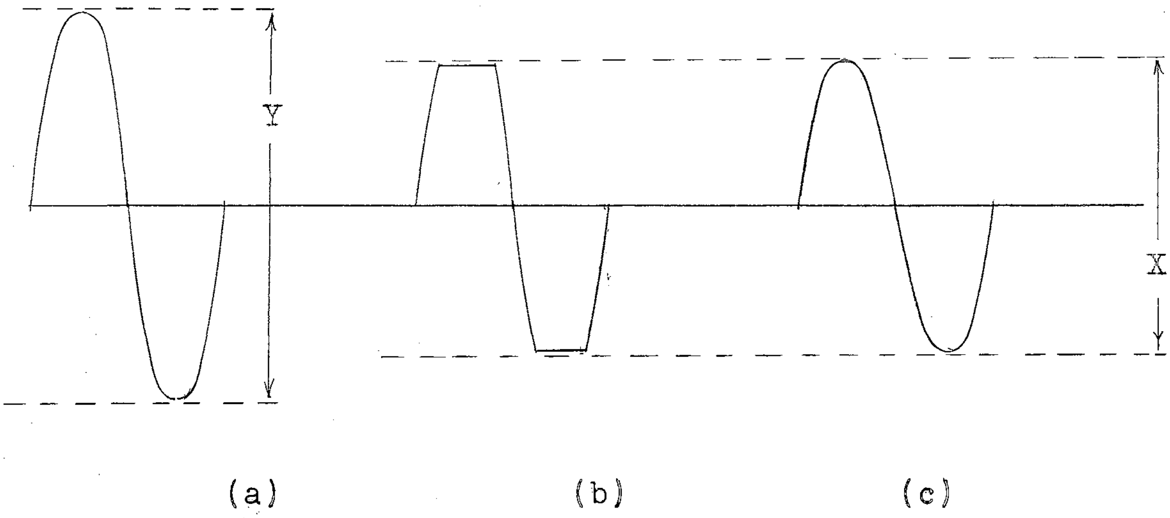

Figure 2. Compression Action on Waveform

It should be noted that Figure 2(c) satisfies both requirements of a compressing amplifier. The level of the wave does not exceed level "X," and the wave form is not distorted, i.e., it is a pure sine wave.

Nothing has been said as to how the basic amplifier was modified to produce the desired results represented by

Figure 2(c). Let it be sufficient for now to say that a "control" circuit such as the one in Figure 3 was added to the amplifier. This was done so the gain of the amplifier becomes inversely and nonlinearly proportional to the level of the input signal; i.e., if the input signal level is high, the gain of the amplifier will be low, and if the input signal level is low, the gain of the amplifier will be high. Of course, the control circuit characteristic will determine the relationship between the input signal level and the gain of the amplifier to produce the desired output. The various means of accomplishing this desired action of the control circuit will be discussed in later chapters.

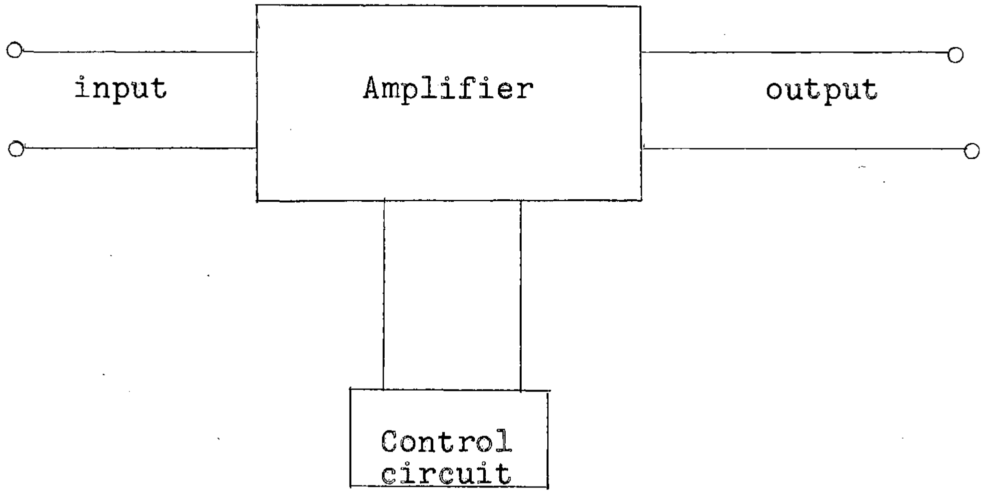

Figure 3. Block Diagram of Compressor

The term "d.b." will be used extensively in this thesis as a measure of signal power level (1). It is defined as:

$$N_{db} = 10 \log_{10} (P_2/P_1) \tag{1}$$

where: N_{db} is the number of db

P_1 is the reference power

P_2 is the power which is referred back to P_1.

In order to measure absolute power levels, P_1 will be defined in this thesis as "zero db," and it is equal to one milliwatt of power developed across 600 ohms.

The term "db of gain" will be used to express the gain of an amplifier without referring to the absolute power level of the input or output signal; i.e., if the input to an amplifier is -40db and the output is -10db, the amplifier is said to have a gain of 30 db.

Another term that should be defined at this time is "db of compression." This term is defined as the difference in db between the output level of a compressing amplifier if there were no compression and the output with compression. This may be explained best by considering the following example. One can suppose that the input to an amplifier caused the output to be +20db. Now, one can suppose a compressor circuit was added to the amplifier and designed to control the output so that it would not exceed a level of +10db. Under these conditions the output without compression would be +20db, and with compression it would be +10db. As a result, it could be said that the compressor produced 20db - 10db, or 10db of compression. If the input were increased so that the output would be +30db without compression, and the output were still held constant by the compressor circuit, the compressor would produce 20 db of compression.

Present Day Compressors

The commercial compressors being manufactured today using vacuum tubes have very good technical characteristics. Most of them have a minimum range of 20db of compression, and some of the better units have a greater range. These compressors work very well for applications such as the audio input on a transmitter. They also are used extensively in disc recording. However, they are not used often for remote broadcasting for several reasons. One reason is that they are quite large in comparison with the rest of the remote broadcast gear and would be hard to handle. Another reason for not using them lies in the fact that they are somewhat fragile and moving them around is simply "asking for trouble." They also are difficult to service due to the complex circuits. And, finally, they are expensive. At this point one might ask, why not put a compressor on the output of the telephone lines used to carry the remote broadcast? This is not advisable because it would mean that the average program level from the remote unit would have to be sent at a much lower level, and when the program was amplified at the station, the line noise would be amplified with it.

Objective

From the foregoing discussion it may be assumed that compressors using vacuum tubes are not especially practical to use for remote broadcasting. However, the recent invention of the transistor has provided the means with which to build a compressing amplifier which would be very suitable for this type of work.

With the shortcomings of present day compressors in mind, criteria for an ideal remote broadcast compressing amplifier could be set up as follows:

1. light weight
2. rugged
3. contains its own power supply
4. small in size
5. simple circuits, requiring no adjustments
6. extremely dependable

The following chapters of this thesis will show the development of transistorized circuits to meet these criteria for an ideal remote broadcast compressing amplifier.

CHAPTER II

DISCUSSION OF EXPERIMENTS

There are only two apparent means of controlling the gain of an amplifier to be used as a compressor. One method is to apply variable feedback from the output to the input of the amplifier with the proper amplitude and phase to keep the output at a constant level. This means that the feedback path would have to pass through a non-linear element so that the amount of feedback would be increased as the input signal level increased. Of course, the feedback signal itself must not be distorted by this non-linear element.

The method that is used almost universally in present day compressors requires a direct current signal to control the bias of an amplifying element, the gain of which is sensitive to its bias level. This direct current signal is generated by rectifying a portion of the amplifier output signal. As the output level of the amplifier increases, so does the direct current bias level increase. As a result, the gain of the amplifier stage to which it is connected is reduced; thus the output signal remains at a constant level.

The discussion and results presented in this chapter will be concerned with applying the two methods mentioned above to circuits using transistors to obtain a compressor.

The circuit found to be most suitable will be discussed in Chapter III.

Gain Control by Varying Transistor Bias

The gain control of compressors that use vacuum tubes is accomplished by varying the bias of remote cut-off tubes. Therefore, the logical first step in designing a compressor using transistors would be to investigate a transistor to find if this gain vs. bias or remote cut-off characteristic is present. Fortunately, a characteristic similar to this is present in transistors. The set of collector characteristics shown in Figure 4 display this gain vs. bias characteristic (2). The curves in Figure 4 were derived by taking advantage of the non-linear input impedance of a transistor. This was done by varying the input current and holding the input voltage constant. It may be observed that for small values of bias the gain of the transistor is small, and as the bias is increased the gain also is increased.

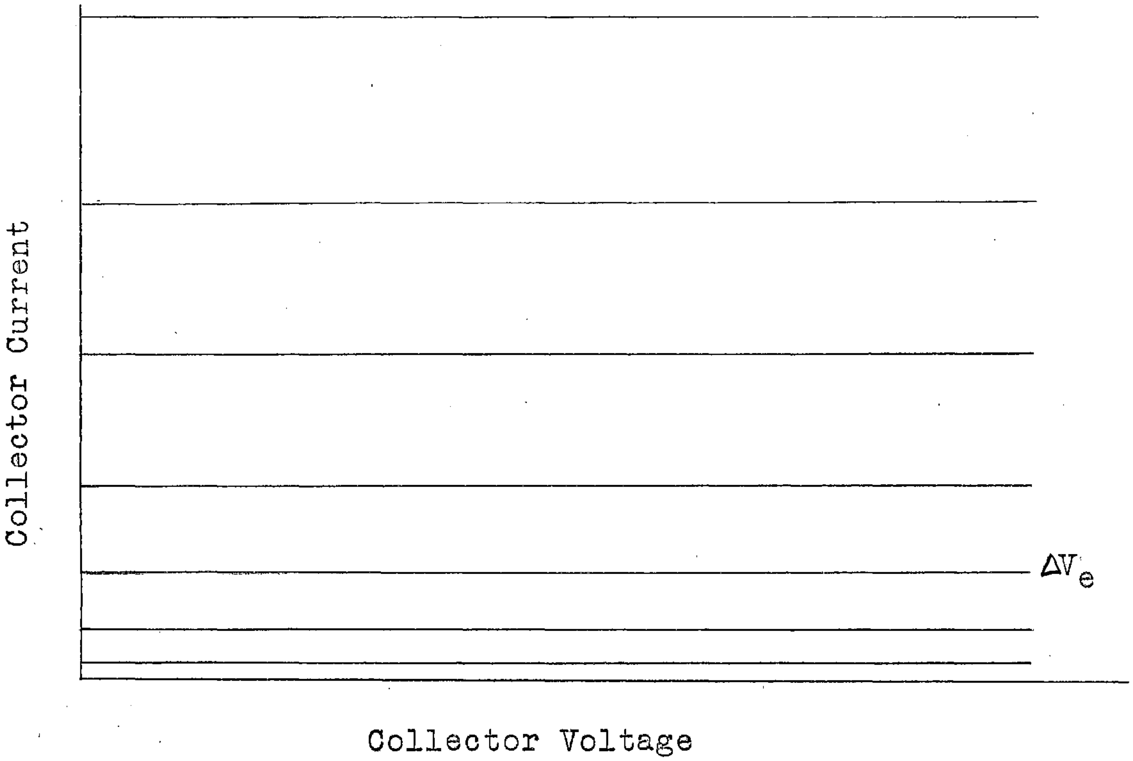

Figure 4. Collector Characteristics

In order to study this variable gain characteristic in actual circuit conditions, the circuit shown in Figure 5 was built. The main requirement for this circuit is that the source impedance be kept low so that the source will look like a voltage source to the transistor and not a current source. A current source will destroy the variable gain characteristic of a transistor. The input signal level was -40 db, and the frequency was 1,000 cycles.

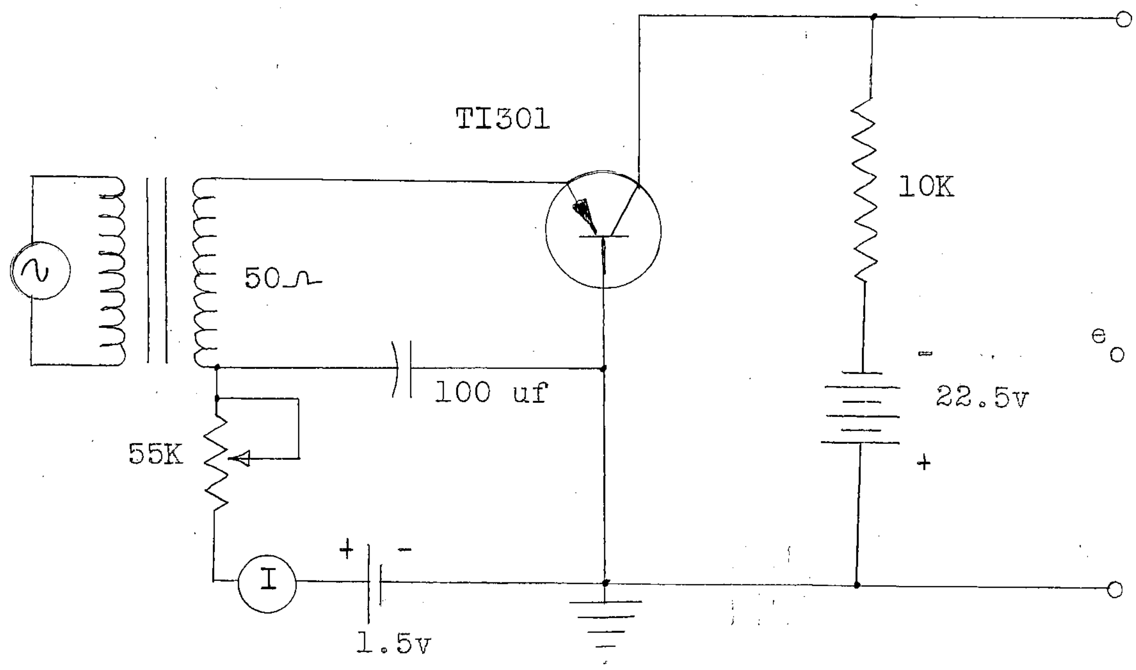

Figure 5. Circuit for Measuring Transistor Gain as a Function of Emitter Bias

The results of this test are shown in Figure 6. It may be seen from this curve that the gain of the circuit may be varied over a range of 30 db by varying the transistor bias from 10 microamps to 800 microamps. Obviously, the gain of the circuit can be varied enough to compress over a range of 30 db. However, some of the other results are not so encouraging.

One of the first discouraging results was that 20 db of the total 30 db of control occur with a range of 10 to 100 microamps bias. Of course, it would be extremely difficult

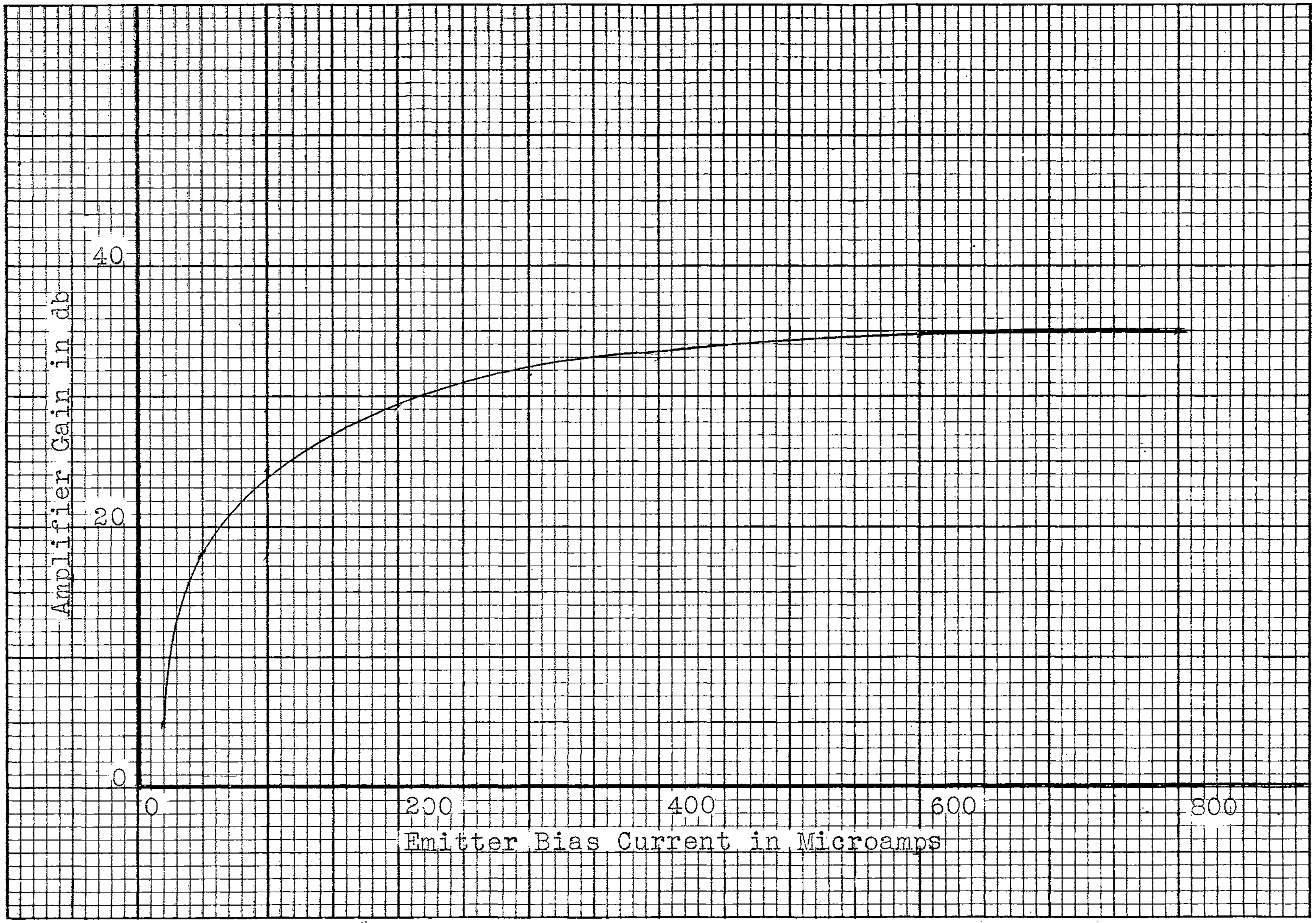

Figure 6. Gain as a Function of Emitter Bias

to accurately supply a direct current bias at these extremely low levels. Also, the gain vs. bias characteristic is not linear, and, therefore, the applied direct current bias would have to be compensated to counteract the gain vs. bias non-linearity characteristics.

Another difficulty is that the input level must be kept quite low to prevent distortion. The problem here is that, if a larger signal is placed on the input of the amplifier circuit, the bias will be lowered to reduce the amplification and thus will perform a compressing action. However, as the level of the signal increases, the a.c. signal swing becomes larger and larger while the bias is reduced in an effort to lower the gain. Of course, what happens is that the amplifier starts operating class B rather than A because, due to the low bias, it is cut off during a portion of the cycle. It was found that an input of -40 db was the maximum level of input signal, with full compression, the amplifier could have without distortion. Therefore, the amplifier would have to be operated around -70 db to allow the full 30 db of compression without distortion. Of course, it would not be advisable to operate with this extremely low level of input signal.

A transistor may be connected in the common emitter configuration to obtain this gain control characteristic. The collector voltage also may be varied to produce a variable gain characteristic. However, all of these methods yield approximately the same results, and the previous discussion would apply to the results of these other arrangements (3).

Gain Control by Means of Variable Feedback

Theoretically, the gain of an amplifier can be varied by controlling the amount of negative feedback to the input stage. The resultant gain of an amplifier with negative feedback is expressed by: (4)

$$K_r = \frac{K}{1 - K\beta} \qquad (2)$$

where K is the gain of the amplifier without feedback, and $-\beta$ is the feedback fraction. If the absolute value of the quantity $|K\beta|$ is very much greater than 1, then the expression above can be reduced to:

$$K_r = \frac{K}{-K\beta} = \frac{1}{-\beta} \qquad (3)$$

From this it may be seen that the resultant gain of an amplifier with negative feedback is determined by the feedback fraction $-\beta$. This feedback fraction is usually a voltage divider network composed of resistors so that the feedback will not be affected by frequency. From this it may be deduced that for any given β, the resultant gain of the amplifier will be constant. In order to achieve a variable gain characteristic, the element that determines β must be sensitive to the signal level across it. In other words, as the output of the amplifier increases, β also would increase, and the resultant gain of the amplifier would be decreased, thus tending to keep the output level constant. At first thought an element with this characteristic would seem to be strange and possibly not available. However, for d.c. signals, a diode biased in the forward direction has this characteristic. Figure 7 displays this characteristic. It may be observed that this relation between input voltage and output voltage occurs only in the area before the diode breaks down completely. When the input voltage is low, the resistance of the diode is high, and most of the voltage is dropped across the diode. As the voltage is increased the resistance of the diode decreases, and more of the voltage drop occurs across the resistor. As a result the output voltage of the circuit increases.

It is obvious, however, that the diode will not give the desired characteristic for an a.c. signal. It may be seen that an applied a.c. signal will be distorted by the diode. This distortion in the feedback path, of course, will be passed back to the input of the amplifier and thus will cause the output of the amplifier to be distorted.

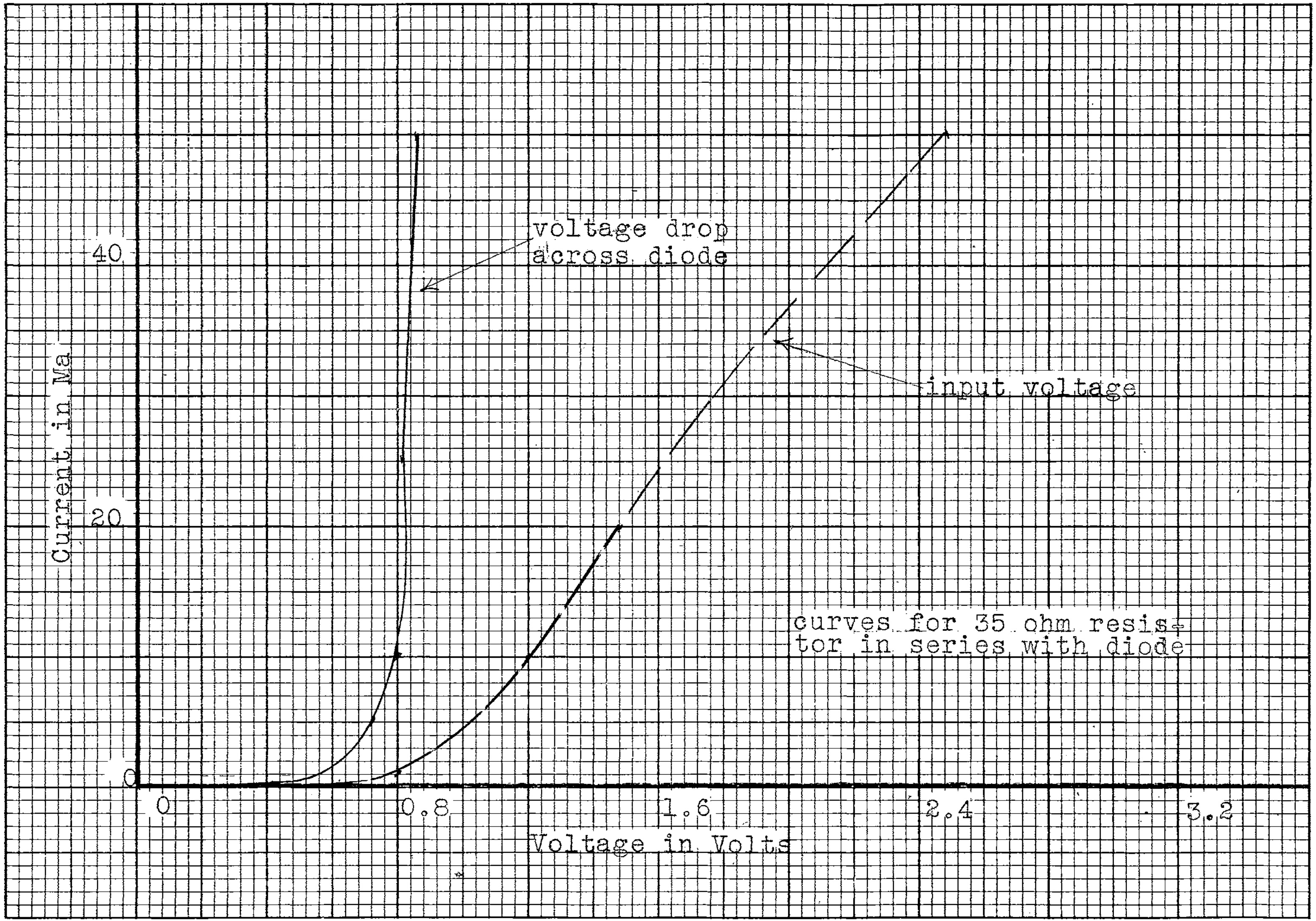

Figure 7. Diode Resistance Characteristics

There was no element found, except possibly a thermistor, that would have suitable characteristics for this type of gain control.

Gain Control by Variation of Collector Load Resistance

Since the transistor collector characteristics are similar to those of a vacuum tube, it would seem logical that the gain of a transistor amplifier could be controlled by varying the load resistance. In order to examine this possibility, a circuit shown in Figure 8 was constructed, and the results of the tests made on this circuit are plotted on Figure 9.

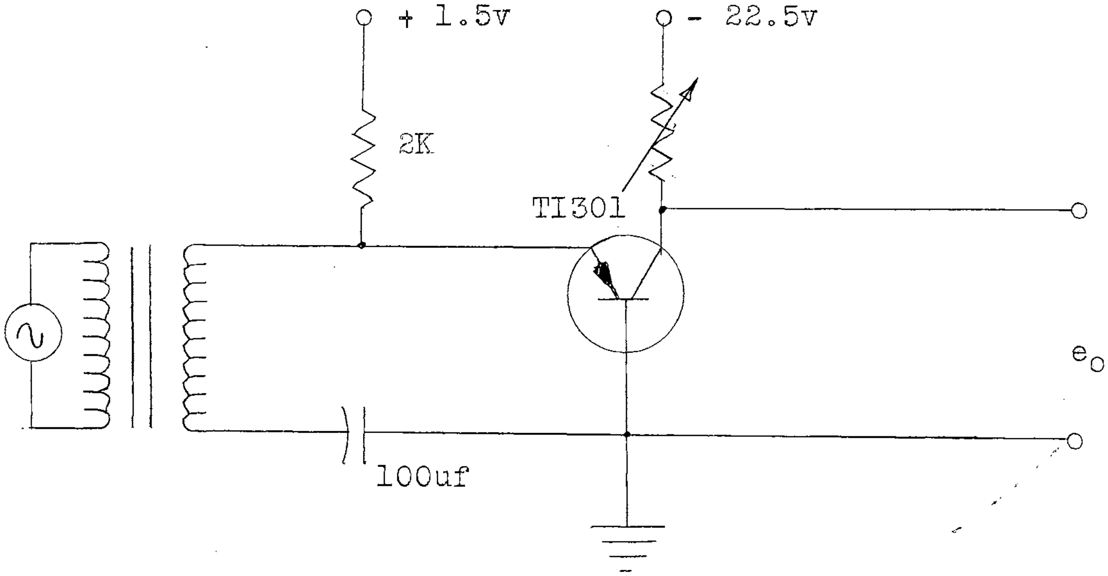

Figure 8. Circuit for Measuring Transistor Gain as a Function of Load Resistance

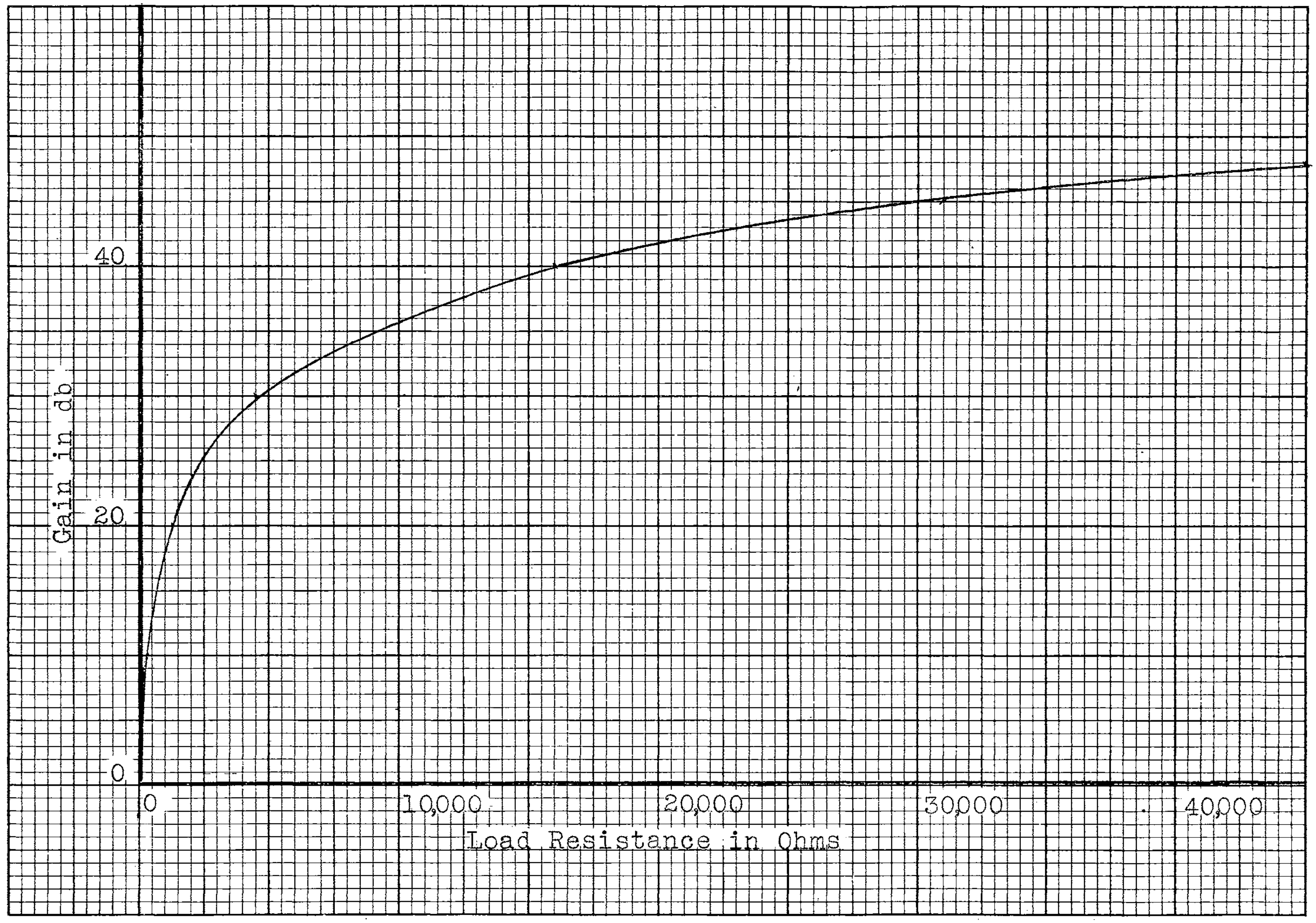

Figure 9. Gain as a Function of Load Resistance

From this figure it may be seen that the gain of the amplifier may be varied over a range of 48 db by varying the load resistor from 55 Kohms to 110 ohms.

The problem of using this circuit now resolves itself to finding an element, the resistance of which may be varied by applying some kind of control bias. An apparent likely choice for this element would be another transistor connected in series with the collector of the transistor amplifier. The emitter of this second transistor would be connected to the collector of the amplifier transistor, and the collector of the control transistor would be connected to the negative supply voltage. With this arrangement the resistance of the control transistor could be varied by changing the bias level on the base of the transistor. This control transistor would act as the load resistor of the amplifier stage. As a result, when the bias level of the control transistor is raised, the resistance of the transistor will decrease, thus, theoretically, decreasing the load resistance of the amplifier stage. However, when the circuit previously described was assembled, it was found that it would not operate satisfactorily. The main difficulty that prevented proper operation was that the resistance of the control transistor did not vary uniformly with respect to the base control bias. In fact, it acted almost like a switch, i.e., the control transistor had a high resistance up to a certain level of base bias. Then above that point it dropped to a much lower resistance and remained almost constant.

Of course, this switching action will not suffice for the compressor application. (One might have suspected this switching action of the control transistor after a closer examination of the transistor characteristics.)

The fact remains that an amplifier stage with an automatically varying load resistor could be used as a compressor if a suitable means could be found for varying the load resistance automatically. The investigation of this particular circuit was not pursued further because it gave rise to the idea for a very satisfactory circuit which is described in the next chapter.

CHAPTER III

DISCUSSION OF THE MOST DESIRABLE CIRCUIT

In Chapter II, several of the various important ideas and circuits that seemed as if they could be used as the control stage of a compressor were discussed. It should be noted that in each case previously discussed the circuit had one or more serious disadvantages. These disadvantages did not mean that it would have been impossible to use one of these circuits in a compressor; however, they did indicate that the circuits left something to be desired. In the development of the circuit to be presented ~~in this chapter~~, the author has attempted to find a circuit with all the advantages and as few of the disadvantages as possible of the circuits which were discussed previously.

The basic concept for the development of this circuit was ~~an attempt~~ to use a voltage divider network such as the one shown in Figure 10. From this circuit it may be seen easily that:

$$E_o = \frac{R_2}{R_1 + R_2} (E_{in}) \qquad (4)$$

When R_2 is very large in comparison with R_1, the network will not attenuate the input signal very much, and E_o will almost equal E_{in}. As the resistance of R_2 decreases, the network will attenuate the input signal more and more. When R_2 becomes zero, all of the input signal is dropped across R_1, and E_o is equal to zero. This, of course, is the simplest form of a voltage divider network. However, if R_2 could be made to vary as a function of the amplifier input signal level, this simple circuit would be completely adequate as the compressor control circuit.

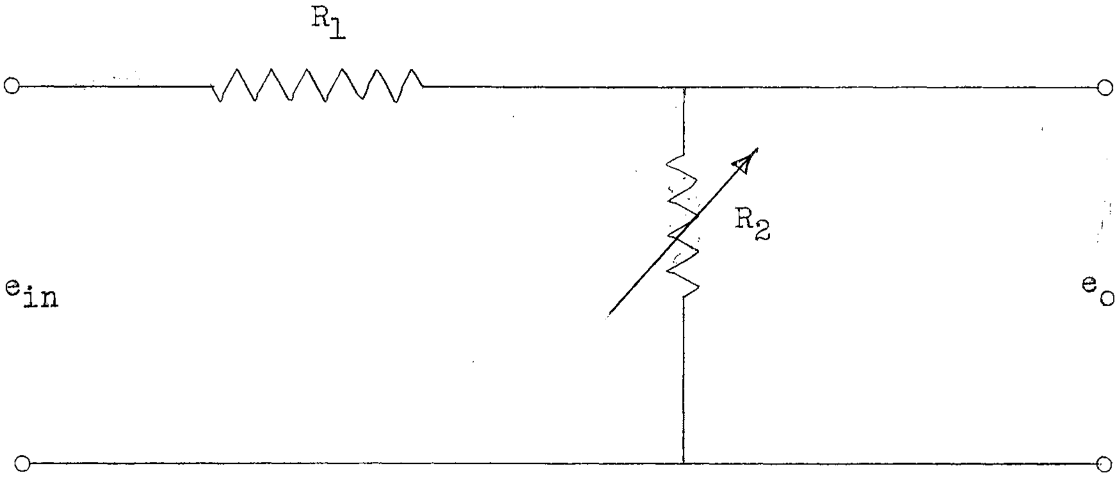

Figure 10. Voltage Divider Network

Again, the problem of what could be used for the resistance R_2, the resistance of which could be varied by a control bias, arises. In hope that a transistor could be used for R_2, one of the first possibilities would be to connect a transistor across the line in either the common base or common emitter configuration. However, it should be recalled, from the discussion on "Gain Control by Varying Collector Load Resistance" in Chapter II, that a transistor connected in either of the two configurations mentioned above acts like a switch and will not suffice for a variable resistance element. From this one might suppose that this investigation has become a vicious circle with the same result coming up for each different circuit tested. However, this particular circuit offers one advantage that the others do not. It is not necessary to have a high negative d.c. potential on the circuit to operate the transistor used to replace R_2. Therefore, the transistor could be connected in almost any configuration in the circuit to obtain the best results, and the proper d.c. bias could be supplied from an external source. With this in mind, all of the parameters or characteristics of a transistor were examined in order to find the most desirable connection.

From the observations made of the transistor characteristics, it seems that possibly the base to emitter diode resistance would vary enough so that it could be used as a variable resistance, sensitive to bias level. In order to examine this resistance, the transistor could be connected as shown in Figure 11. From the previous examination of the transistor characteristics, it would seem that the resistance, looking into the circuit shown in Figure 11, could be changed by varying the base bias as shown. The biasing connections tend to clutter the circuit as shown in Figure 11.

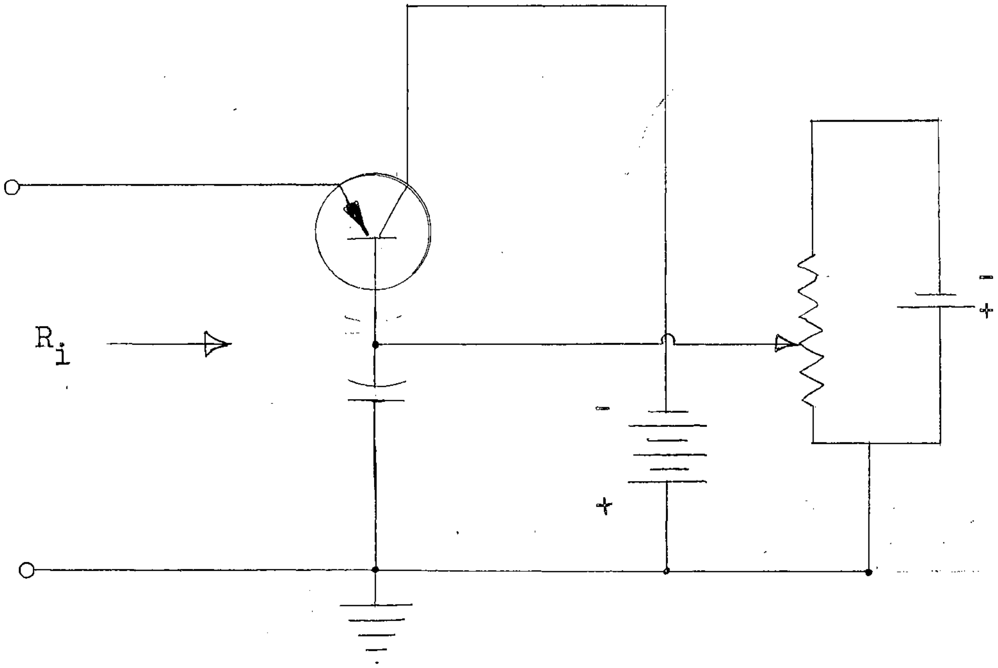

Figure 11. Circuit for Determining Common Base Input Resistance

Since the a.c. resistance is of primary interest, the circuit could be shown more clearly by an a.c. equivalent circuit such as the one in Figure 12 (5). From Figure 12, it may be seen that the collector is a.c. short circuited to the base, and the collector and base are both a.c. short circuited to the ground. In order to find R_i (the a.c.

input resistance), assume a small signal a.c. voltage source was placed between the emitter and ground terminals. Then the loop equation for the first loop may be written as:

$$i_e(r_e + r_b) - \alpha i_e(r_b) = e_1 \tag{5}$$

Even though the circuit in Figure 12 is a two loop network, only one equation is required to find R_i because the current in the second loop is expressed in terms of the current in the first loop (i_e). Therefore, R_i can be expressed as:

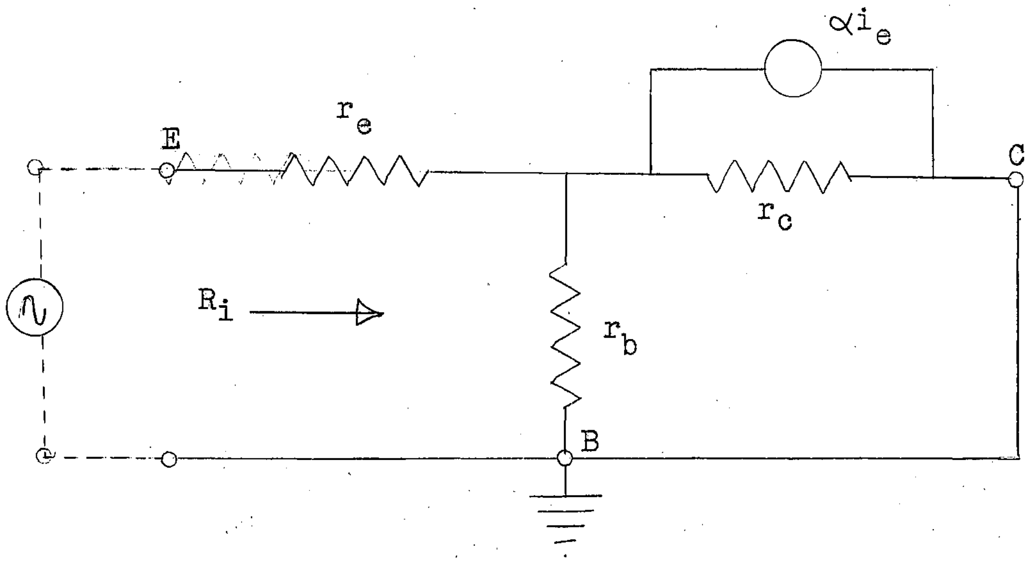

Figure 12. Equivalent Circuit for Determining Input Resistance

$$\frac{e_1}{i_e} = r_e + r_b - \alpha r_b$$

$$R_i = r_e + r_b\,(1 - \alpha) \qquad (6)$$

The experienced student of transistor equivalent circuits will realize, of course, that the preceding development of the equation for R_i was based on the assumption that r_c is very much greater than r_b. However, this is a valid assumption and is accepted by most authors of transistor papers.

It should be noted that R_i is also equal to h_{ib} (6). This is true only for this particular case because R_i was found with the output of the transistor a.c. shorted. Since h_{ib} is equal to R_i, the input resistance under these specified conditions may be obtained from the transistor manufacturer's data. This input resistance then may be plotted for various conditions of bias level such as shown in Figure 13 (7).

Figure 13 shows that the input resistance of this transistor may be varied by controlling the bias level on the transistor. It also shows that the input resistance is not a linear function of bias level; however, it does not have the switch-like characteristics of the output resistance. The linearity could be corrected by placing an element with opposite characteristics in the bias circuit.

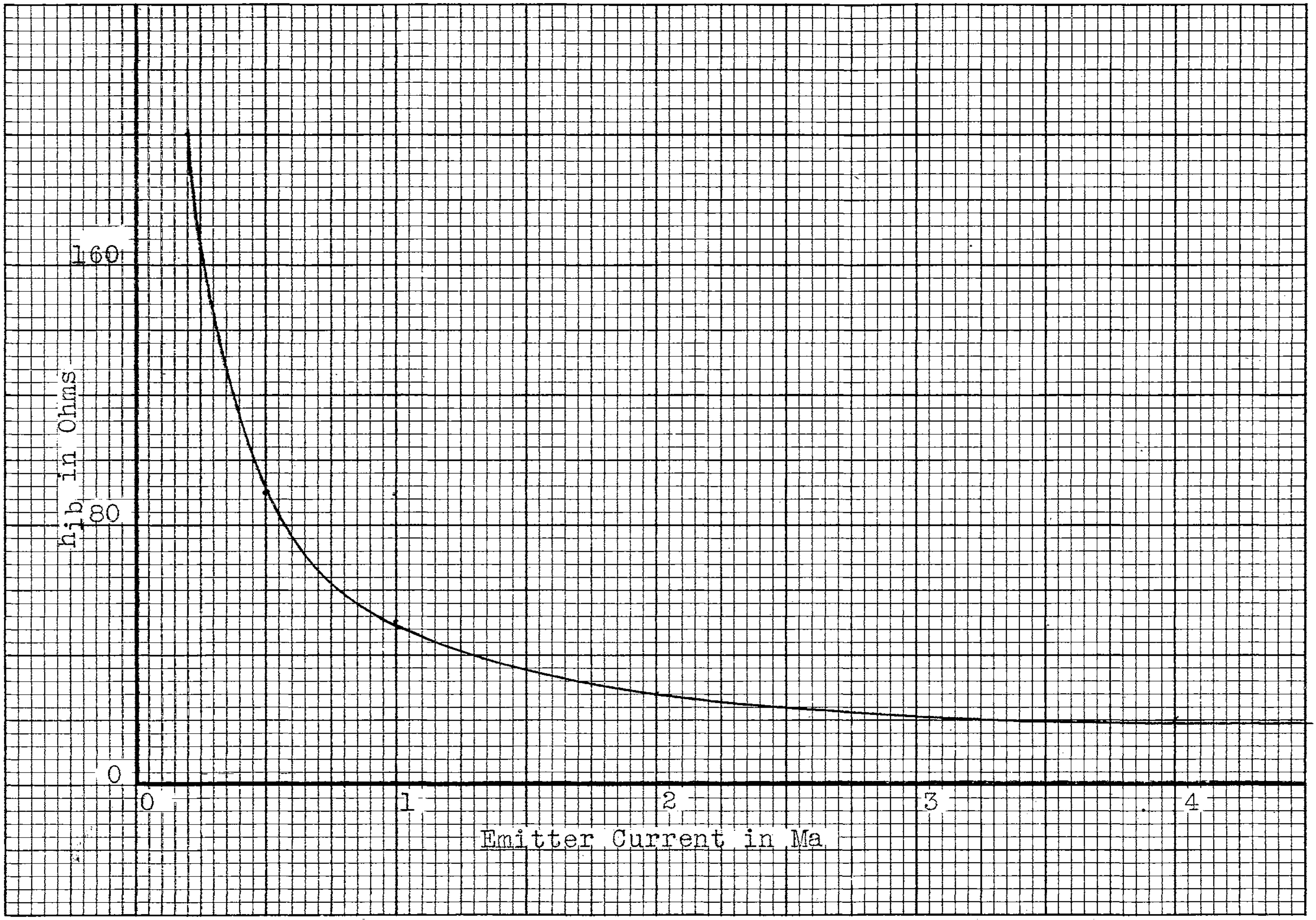

Figure 13. h_{ib} as a Function of Emitter Current

One of the most encouraging characteristics of this curve is the fact that the highest resistance occurs at the lowest bias level. The importance of this fact may be seen by referring to Figure 10. When a small signal is applied to this circuit very little attenuation is needed; therefore, R_2 must have a high resistance. The very fact that this input signal is small allows the transistor to operate at a lower bias level and, consequently, the h_{ib} is a higher resistance. In the previous cases discussed under "Gain Control by Varying Bias Current" in Chapter II, an increasing input signal meant that the bias level had to be lowered to decrease the gain of the amplifier. This tended to force the amplifier into cut-off. However, for the circuit in Figure 10, as the signal level increases, R_2 must decrease to compensate for increasing signal. Since h_{ib} is to be used as R_2, it must decrease, and in order for h_{ib} to decrease, the bias level on the transistor must be increased! This increasing bias level allows the increasing input signal to operate over a more linear portion of the transistor characteristics. Thus, the desired attenuation is accomplished by decreasing the resistance of h_{ib} while allowing the input signal to operate over a more linear portion of the curve and lessening the chance of driving the transistor into cut-off.

In order to test this circuit under actual conditions, the circuit shown in Figure 14 was assembled. Upon examining the circuit it may be seen that it is the same circuit as the one in Figure 10, except R_2 has been replaced by the circuit of Figure 11 with a 2 Kohm resistor added from emitter to ground. The reason for adding this resistor was to prevent the transistor circuit from having too high resistance when there was no bias signal on the base. It also should be noted that R_2 being in parallel tends to linearize R_{in}.

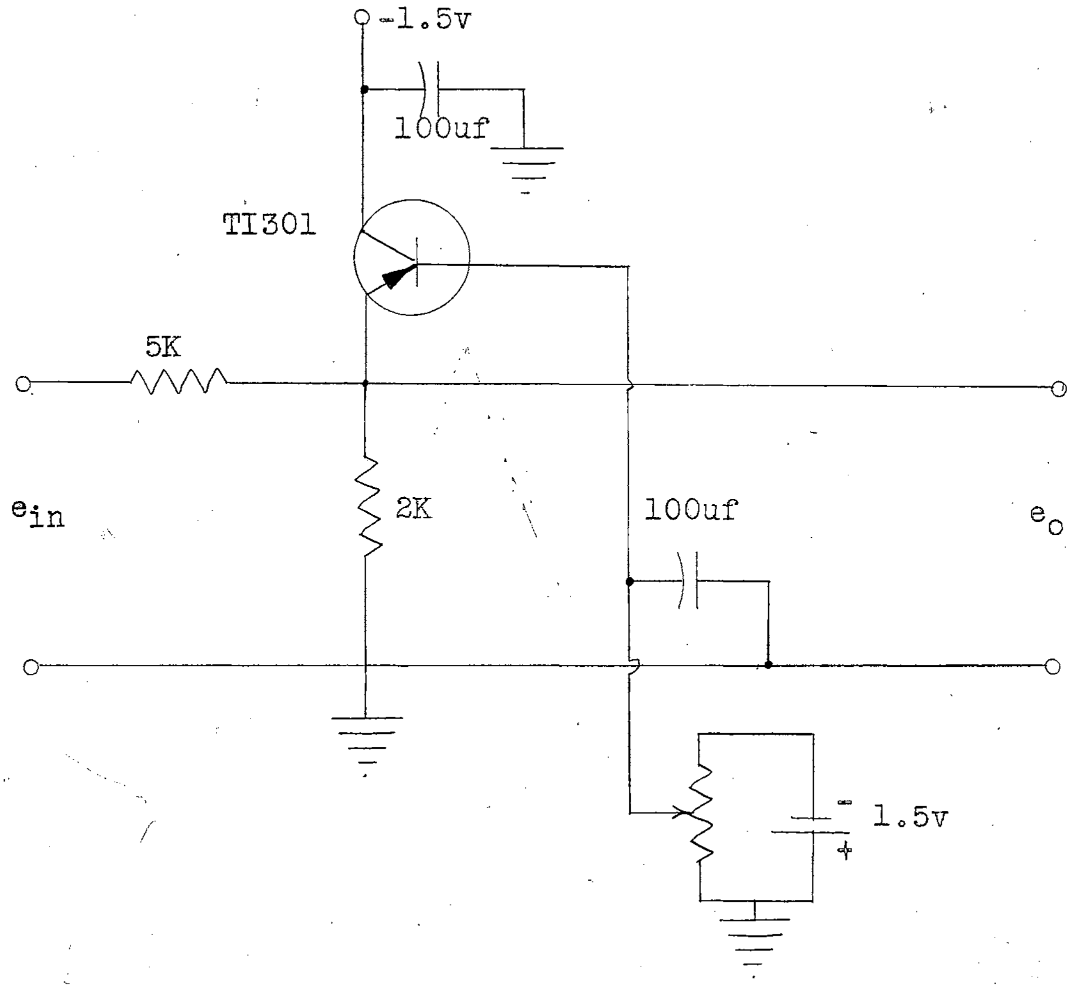

Figure 14. Voltage Divider Network Using a Transistor as the Variable Resistance

It may be seen from Figure 13 that, if the emitter current actually did go to zero, h_{ib} would be quite large, and when a very small amount of emitter current flowed in the circuit, h_{ib} would drop suddenly to a few hundred ohms. The 2 Kohm resistor prevents the R_i from seeing this change by limiting the maximum resistance to 2 Kohm.

For the test, the input signal level was set at -40 db, and the output signal level was -54 db. The input signal level then was increased in 5 db steps. After each increase the base bias was increased until the output signal level was lowered to the original -54 db. Following this procedure it was possible to hold the output signal level constant at -54 db while the input signal was increased 30 db. Above a 30 db increase of input signal, the transistor was forced into saturation, and distortion was noticeable on the oscilloscope presentation of the output signal. However, there was no distortion within the 30 db range.

These results show that the circuit shown in Figure 14 is a suitable control circuit for the compressor.

CHAPTER IV

DEVELOPMENT OF THE SYSTEM

It was shown in Chapter III that it was possible to construct a circuit which has all the necessary characteristics to be used as the control circuit of a compressing amplifier. The purpose of this chapter will be to show how the circuit developed in Chapter III may be incorporated with other complementary circuits to produce a complete system. This system will be the complete compressor.

The Rectifier Circuit

One of the first circuits to be considered is one that will change a.c. amplifier signal to d.c. bias to apply to the control circuit. It should be noted that the compressing action of the circuit in Figure 14 was accomplished by supplying a d.c. bias current to the base of the transistor from a 1.5 volt battery. The 1.5 volt bias battery could not be used in the completed compressor. The bias level must be a function of the compressor input signal level, i.e., if the compressor input increases the bias level also must increase or vice versa. This means that a portion of the amplifier signal will have to be rectified, filtered, and supplied to the control circuit.

The main problem in designing this rectifier circuit is obtaining a d.c. signal output which is free of ripple. The rectifier circuit must supply a constant d.c. output level over a range of frequency from 20 to 20,000 cycles per second. It would be relatively easy to design a filter for the rectifier for a frequency of 20,000 c.p.s., but as the frequency decreases, the time constant of the filter network must be increased to prevent the ripple level from increasing. The ripple level must be kept low because the d.c. bias signal will be applied to the control stage which has an input level of -40 db. The following stages of amplification of the system will amplify the ripple on the d.c. bias just as well as the input to the control circuit.

It was found that a full wave rectifier with a simple resistance-capacitance pi filter, such as the one shown in Figure 15, would produce a d.c. output voltage of 3 volts with a ripple level less than .0008 volts. A half wave rectifier also was tested, but it was found that the ripple content of the d.c. output was excessive. The RC time constant of the filter in Figure 15 is such so that it allows the rectifier circuit to produce a constant d.c. output for an input frequency range of from 50 to 20,000 c.p.s. It is very important that this rectifier circuit have a flat frequency response. If it did not, the control circuit to which its output is applied would act as a tone control, i.e., allowing some frequencies to pass through without being attenuated.

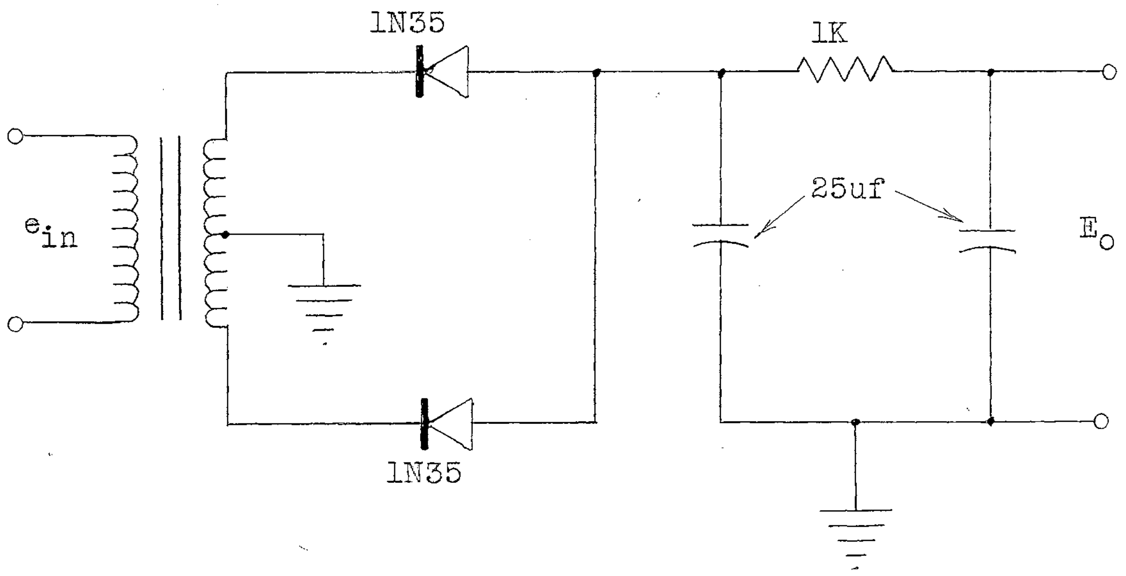

Figure 15. The Rectifier Circuit

The output of the rectifier circuit then was connected to the base of the control circuit. This arrangement is shown in Figure 16. This circuit represents the heart of the compressor. When the proper relation between the amplifier program signal and the rectifier input signal is found, the problem of designing the complete system will resolve itself to building amplifier stages to supply the signals mentioned above.

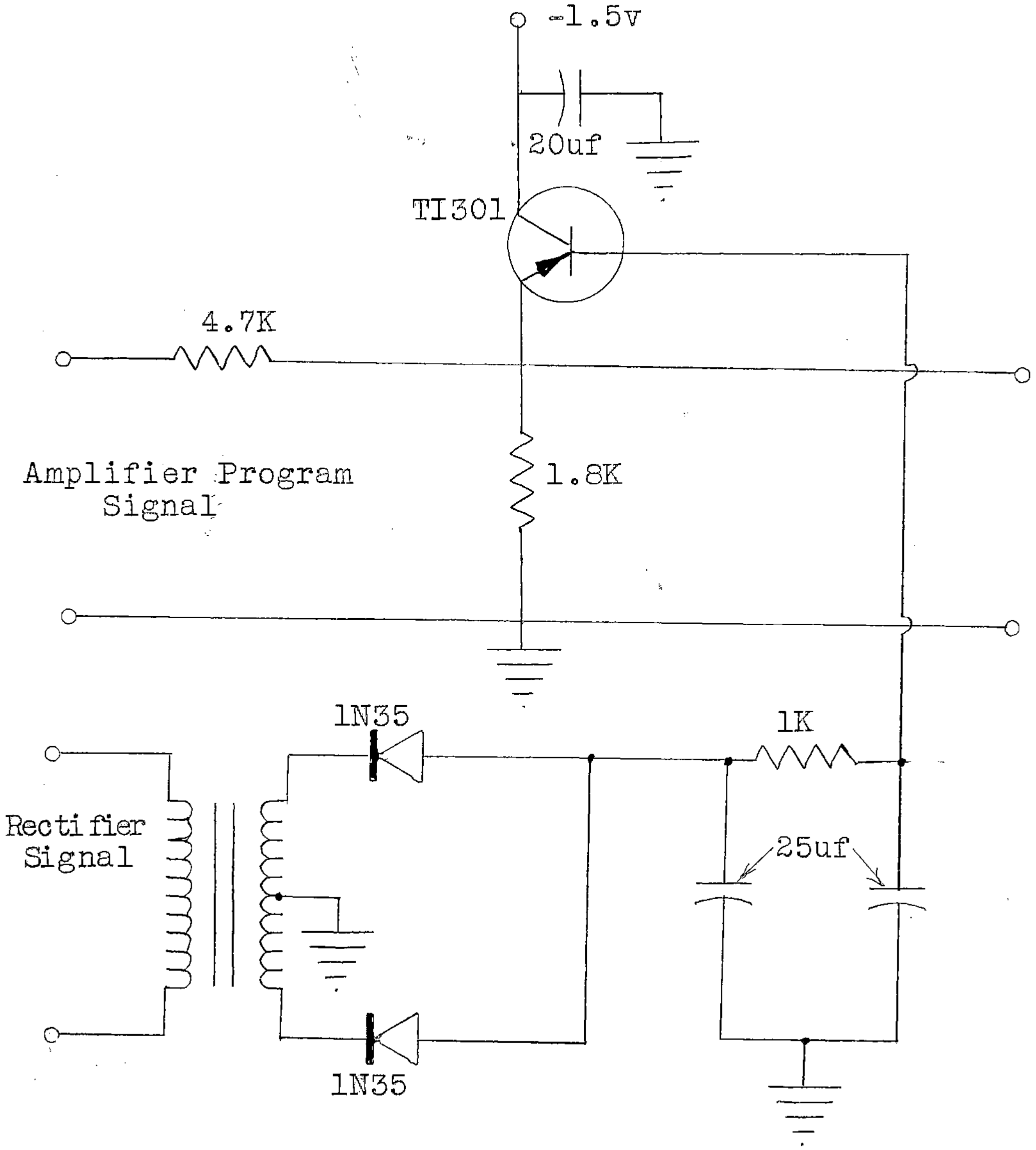

Figure 16. The Rectifier and Control Circuit

One of the first things that needed to be determined from the circuit of Figure 16 was what type equalizing network would be necessary to compensate for the non-linear h_{ib} curve. It should be recalled from Chapter III that, in order for the control circuit to have a linear attenuation characteristic, the d.c. base bias signal must be logarithmic. However, the tests that were run on the circuit of Figure 16 showed that no equalizing network was necessary because a 10 db increase to the rectifier circuit produced a d.c. output level which, in turn, caused the control circuit to decrease the level of the amplifier program signal by 10 db. The reason for this is that diodes were so used in the rectifier circuit that their output vs. input level response characteristic is logarithmic and the complement of h_{ib}.

In order to determine the results of actual operation, an amplifier program signal and a rectifier signal were applied to the circuit of Figure 16. It was found that -40 db was the most desirable starting level for the amplifier program signal. A rectifier input signal of -20 db was required to produce enough bias to activate the control circuit. These two signals were applied by two different signal generators adjusted to the level indicated above, and the frequency of both generators was set at 1,000 c.p.s. The level of both signals then was increased simultaneously in 5 db steps. The results of this test are shown in Figure 17. This curve shows that the circuit shown in Figure 16 can hold the program signal level constant up to an input signal level of -5 db. For input levels larger than -5 db, the output signal presentation on the scope began to show signs of distortion. Below this point no distortion was apparent on the scope presentation. It should be noted that

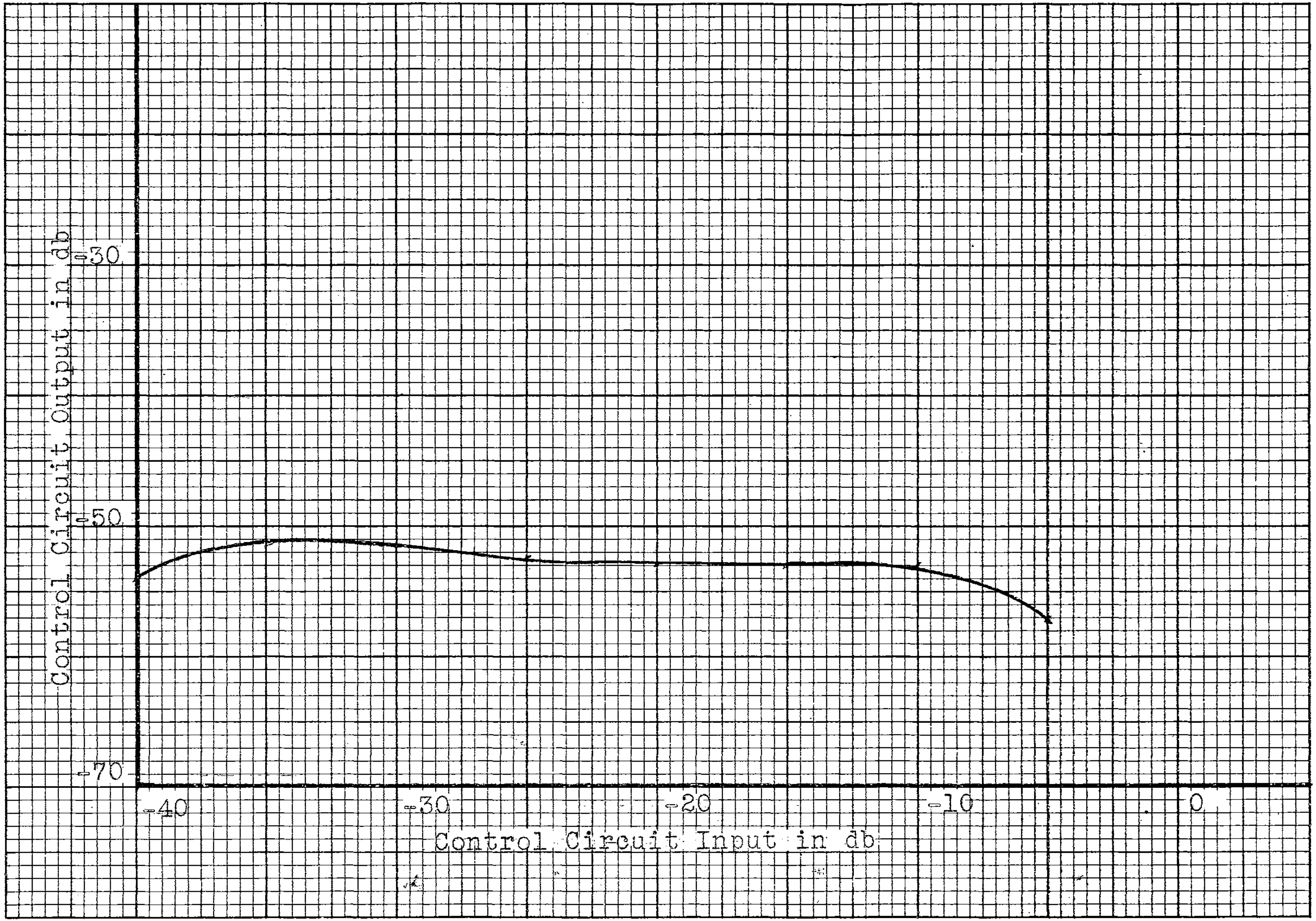

Figure 17. Compression Curve for the Control Circuit

the two signal generators were used merely for convenience. They can be replaced by a single source as long as the prescribed ratio between the two signals is maintained.

It should be noted that the rectifier circuit in Figure 15 requires an input signal composed of two parts which are opposite in phase. The control circuit does not require this type of signal. However, it was decided to design the whole compressor in push-pull stages so that the same signal could be used to drive both the control circuit and the rectifier circuit. The main reason for doing this was to counteract the tendency of a sudden increase of input signal to produce a "thump" in the output signal. This "thump" is produced by the sudden increase of the bias level to the control circuit attempting to compress the increasing input signal. If the control circuit is followed by a push-pull amplifier operating into a transformer, the "thump" produced by the bias is canceled.

The Compressor Preamplifier

Since the desired input level to the control circuit is -40 db, the compressor will have to have one stage of pre-amplification if it is to be driven directly from a dynamic microphone. The circuit designed for this purpose is shown in Figure 18. This is a common base push-pull amplifier. The input is connected through a transformer so that two signals of opposite phase may be obtained from a single phase source.

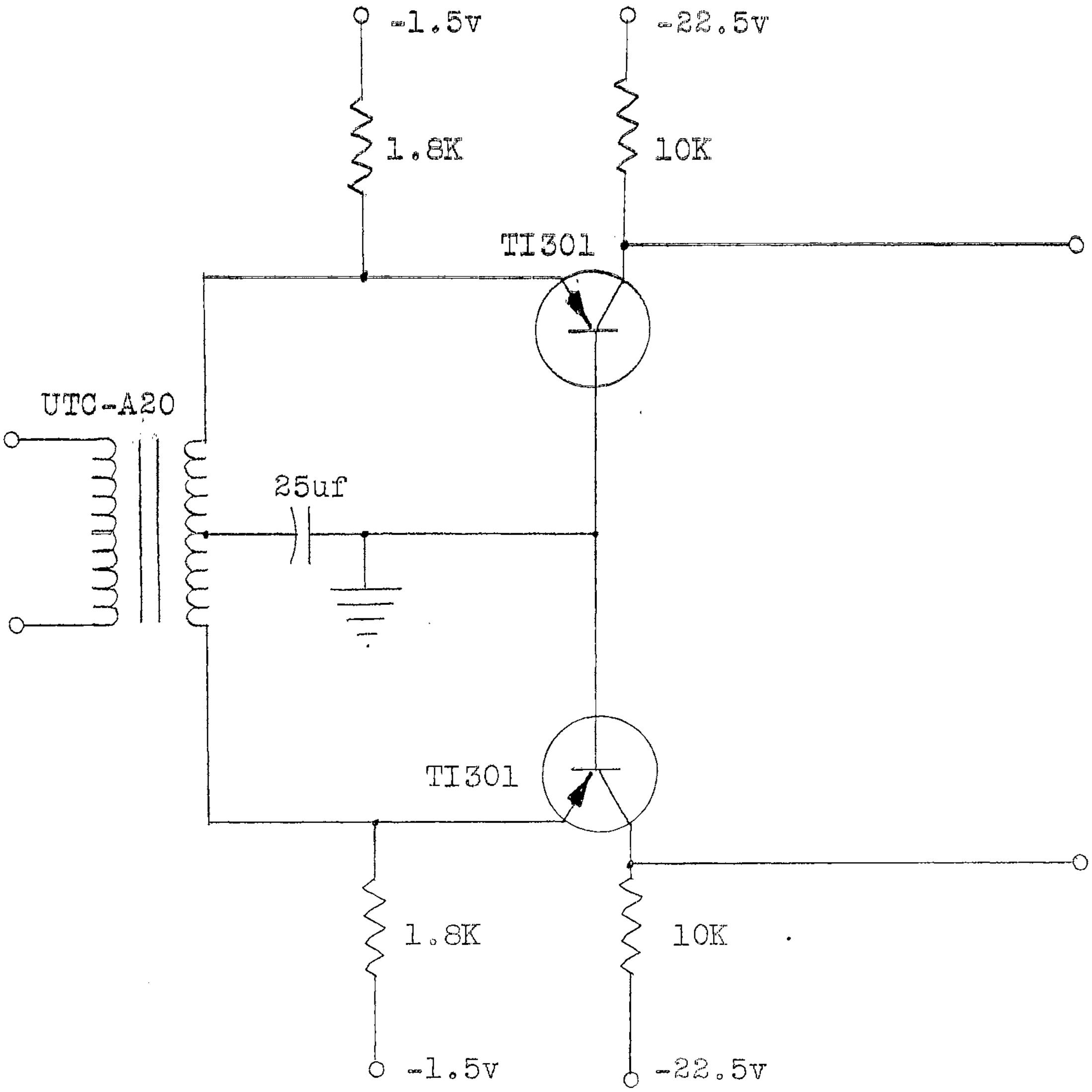

Figure 18. The Compressor Preamplifier Circuit

The transformer also serves as an impedance matching device so that microphones with various output impedances may be used. The transformer used in this circuit was a UTC A20. The stage was designed to have a gain of 20 db when it is connected into the compressor circuit. The common base design was chosen because of its input impedance and stability.

The Rectifier Preamplifier

From the discussion on "The Rectifier Circuit," it was found that the control circuit just started compressing when there was an input of -20 db on the rectifier circuit. If the desired input level to the compressor is to be -60 db, then the input signal will have to be amplified 40 db before it is connected to the input of the rectifier. It should be noted that the compressor preamplifier will increase the input 20 db. If the rectifier preamplifier was connected to the output of this stage, it would only have to have a gain of 20 db. Figure 19 shows the circuit designed to accomplish this. When the circuit of Figure 19 was first assembled, the transformer was omitted, and the circuit was RC coupled to the rectifier. However, it was found that this arrangement greatly increased the time constant of the rectifier circuit, thus slowing the control circuit response. Incorporating the transformer in the circuit, as shown in Figure 19, corrected this problem and also provided a greater current gain to the rectifier circuit.

The transformer used was a Stancor A-3250 with a primary impedance of 10 Kohms center tap and secondary impedance of 500 ohms center tap.

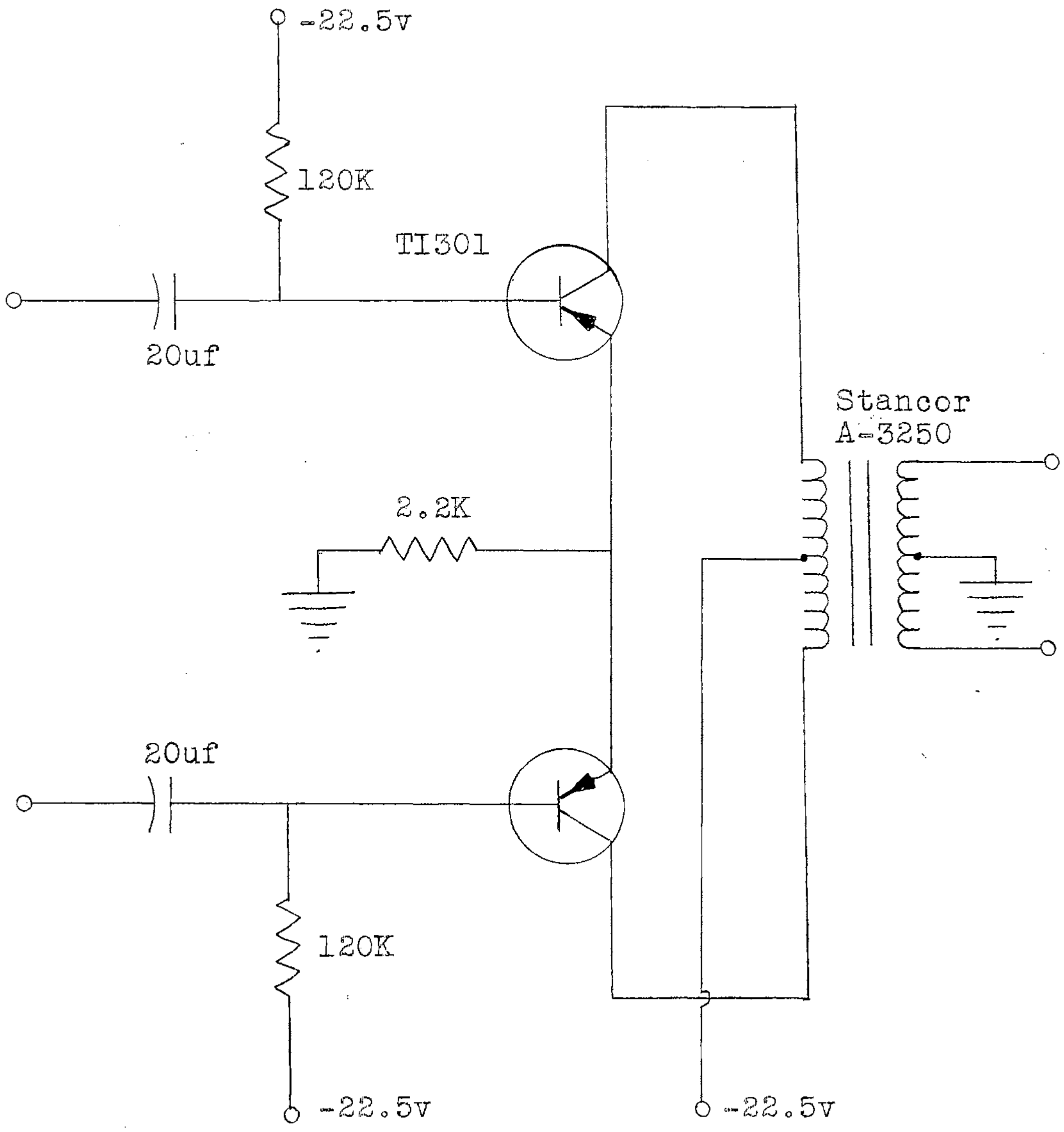

Figure 19. The Rectifier Preamplifier Circuit

It might seem odd that the signal for the rectifier was not taken from the output of the completed amplifier rather than have to use another stage of amplification to supply this signal. However, this was done for a very good reason. With the rectifier circuit and the control circuit receiving their signal from the same source, there is no possibility of oscillation. If the rectifier circuit did receive its signal from the output of the principal amplifier, it would be possible for the compressor to oscillate.

The Output Amplifier

The purpose of this stage of amplification is to bring the program signal up to the desired level and, by termination into a transformer, to cancel the "thumps" produced by the control circuit. The requirements for this stage are not too severe. The stage needs to have a gain of about 30 db. The bias level is not critical, because the input level to this stage should be almost constant. It was decided to use the same circuit that was used for the rectifier preamplifier. The only change was to use the A-3250 transformer without the secondary center tapped.

Tests on the Complete System

The complete compressing amplifier is shown in Figure 20. The signal generator is connected to the primary terminals of T_1. The signal is amplified 20 db by the

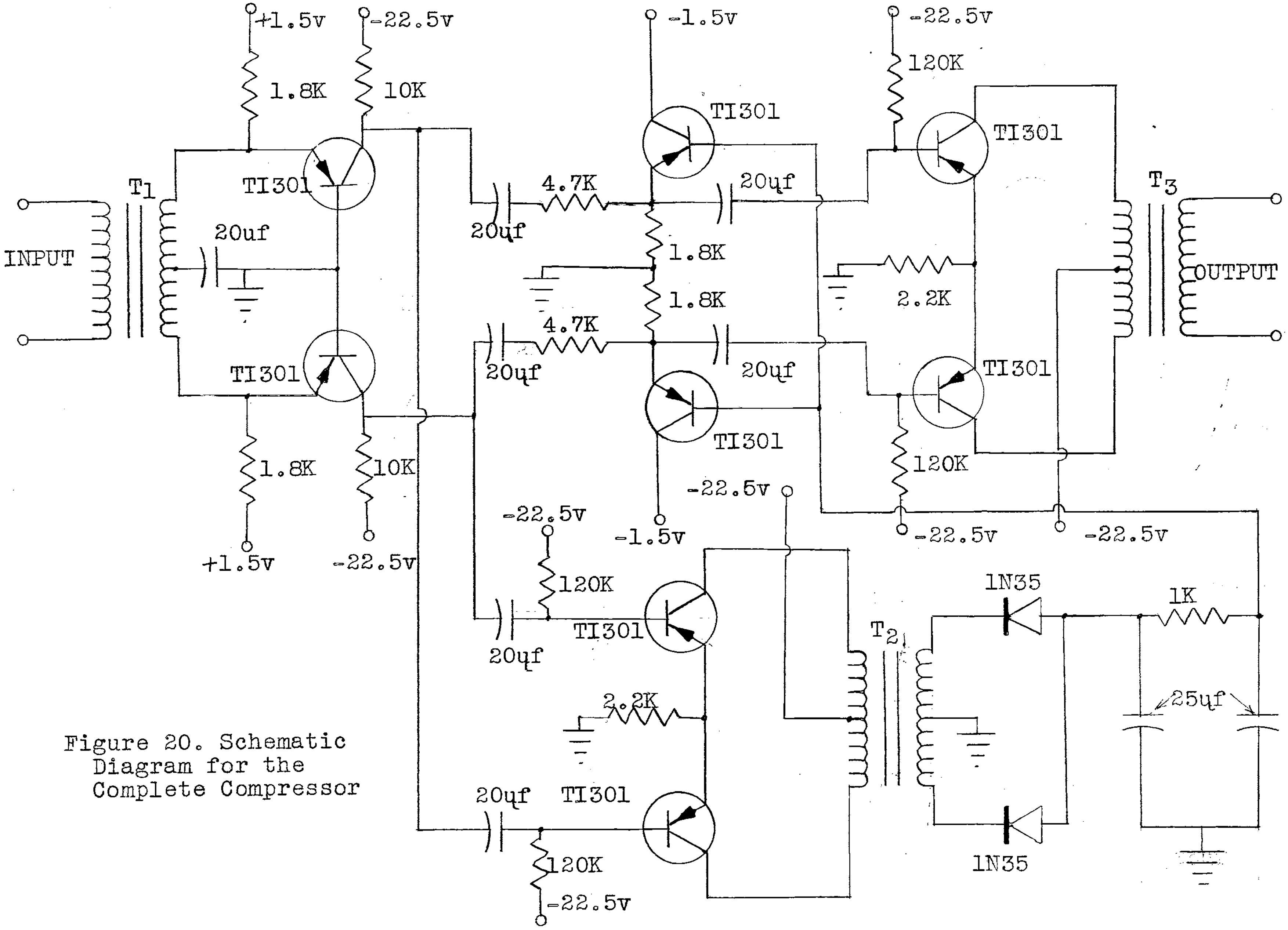

Figure 20. Schematic
Diagram for the
Complete Compressor

compressor preamplifier and passed on to the control circuit and the rectifier preamplifier. Then the signal is amplified 20 db by the rectifier preamplifier and applied to the rectifier. The signal on the rectifier produces a bias level of the proper magnitude to the control circuit. The output of the control circuit, which will be at a constant level over a varying range of input levels, then is fed to the output amplifier. The output amplifier brings the signal up to the desired level.

Several tests were run on the completed compressor to determine how satisfactorily it performed. One of the first points of interest was how much harmonic distortion was introduced by the compressing action of the control circuit. For this test the signal generator frequency was set at 1,000 c.p.s., and the harmonic distortion of the output signal was measured for several different values of input signal. The results of this test are shown in Figure 21. From this curve it may be seen that the harmonic distortion does not exceed 5 per cent even with the input signal level increased 40 db. These results were very gratifying.

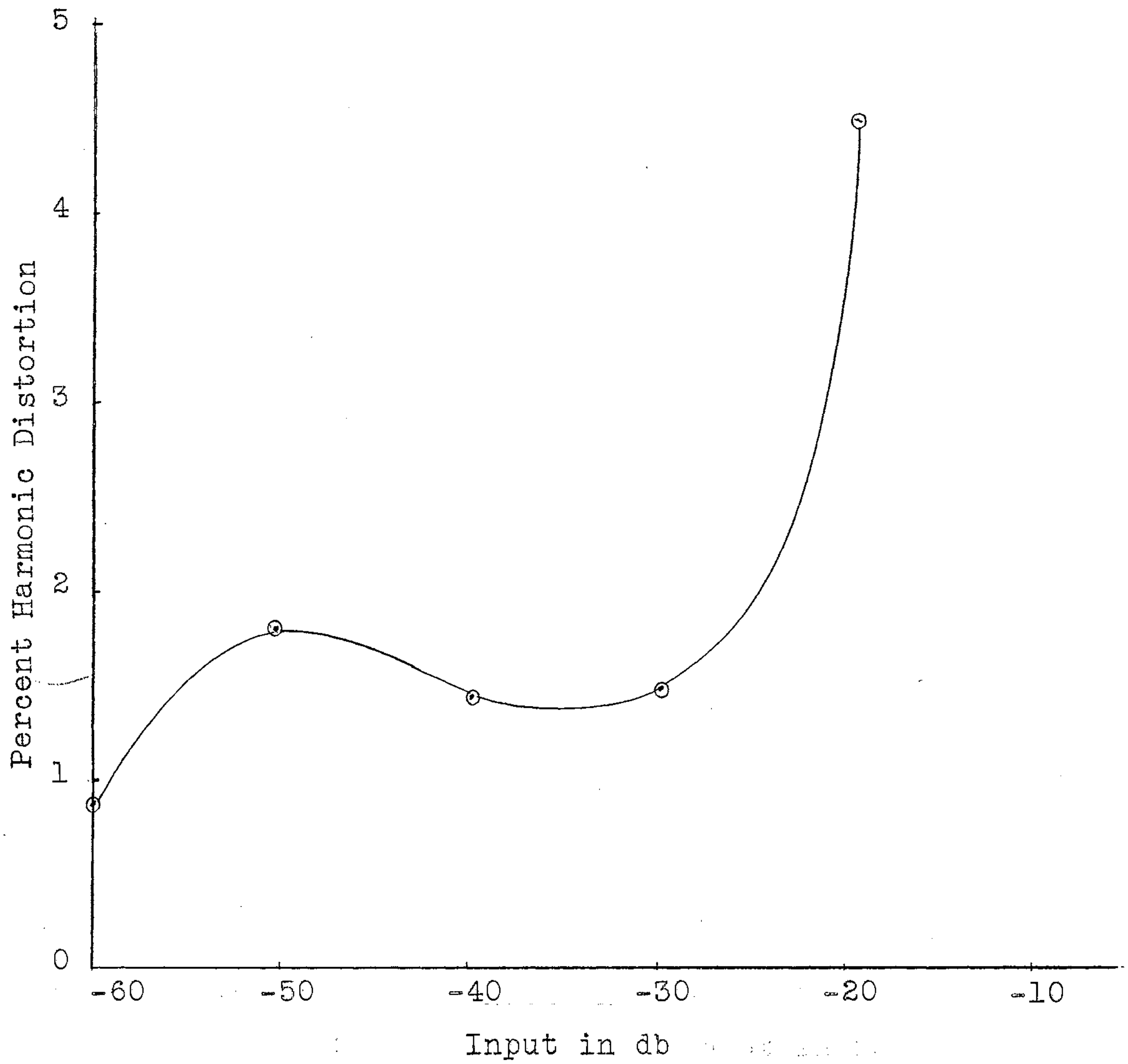

Figure 21. Harmonic Distortion vs. Input Curve

The next test made on the compressor was to determine how much the output varied with respect to the input. It should be noted that this is actually how much the compressor circuit will compress the input signal. This test was made with the signal generator adjusted to a frequency of 1,000 c.p.s. The input signal level was set at -60 db and then increased in 5 db steps. The output signal level was measured for each of these points. The result of this test is shown in Figure 22. From this it may be seen that the output remains almost constant for the first 20 db increase of input level. These results, although not perfect, were still most pleasing.

The frequency response test yielded the only discouraging results. The completed compressor circuit shown in Figure 20 did not seem to attenuate frequencies below 100 c.p.s. This is shown in Figure 23. However, it was found that the mismatch of impedance between the secondary of T_2 and the input to the rectifier circuit was causing all the trouble. The explanation of the difficulty is the fact that the rectifier appeared to be a high impedance load to the secondary of T_2 which had an impedance of 500 ohms center tap. This, of course, destroyed the low frequency response of the rectifier preamplifier, and as a result there was no signal being fed to the rectifier circuit to produce the control bias for low frequencies. When the secondary of T_2 was shunted with 250 ohm resistors, the frequency response was corrected. It was found that with the 250 ohm resistors the rectifier preamplifier needed about 10 db more gain to perform properly.

Thus, this circuit has shown that a satisfactory compressing amplifier can be built with transistors.

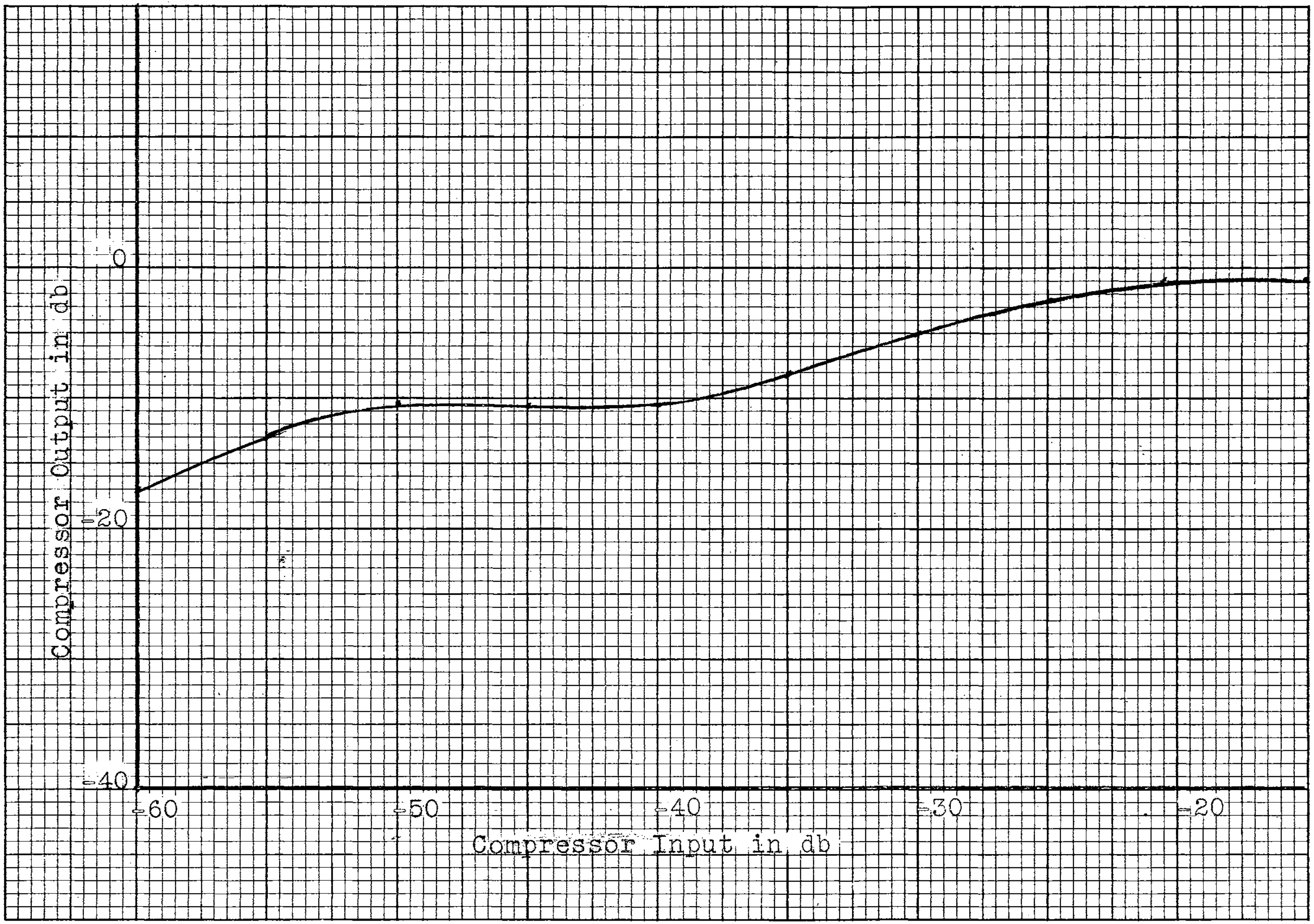

Figure 22. Compression Curve of Completed Compressor

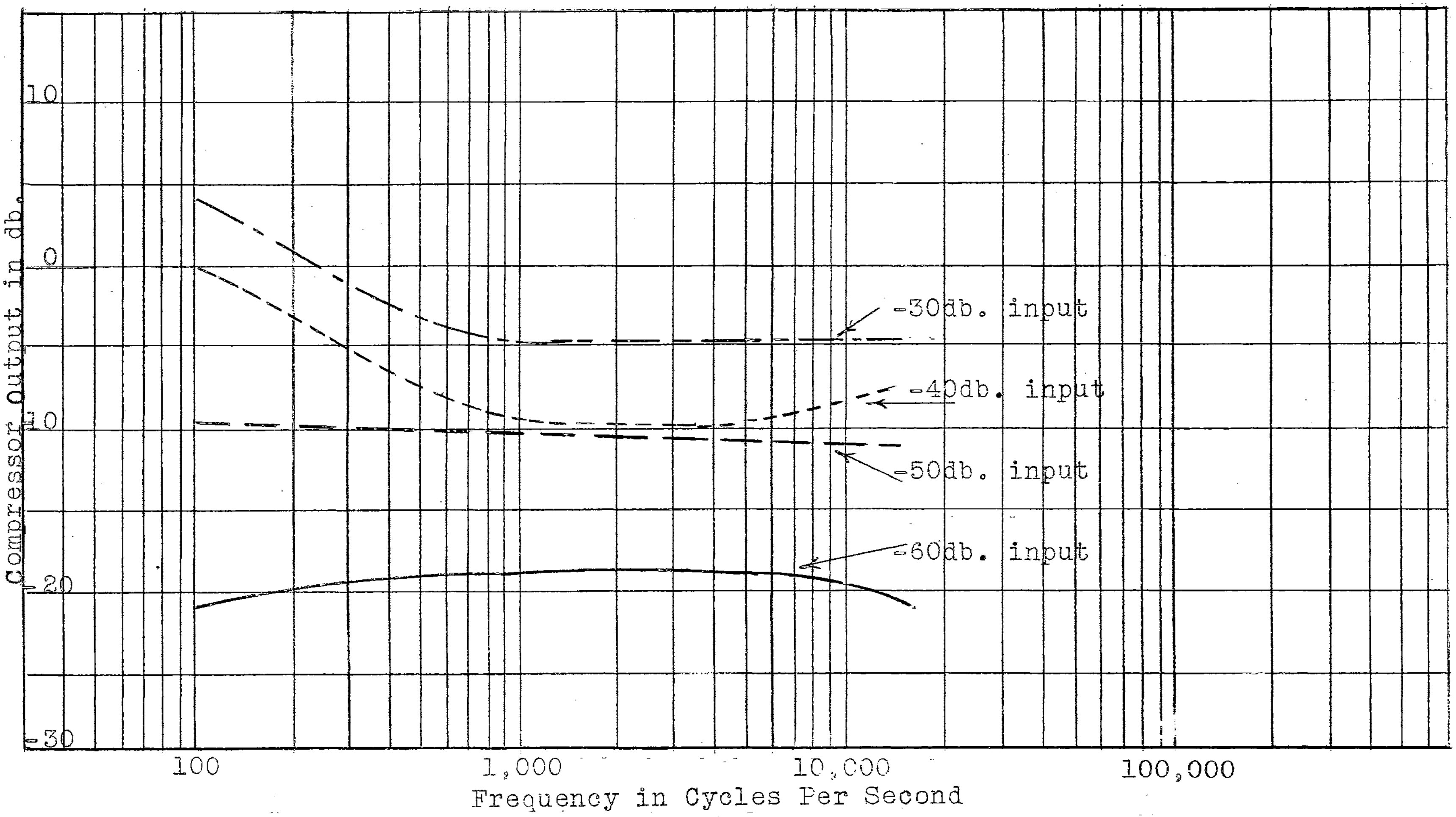

Figure 23. Frequency Response for Different Input Levels

CHAPTER V

SUMMARY

The original objective of this thesis, designing and building an ideal remote broadcast compressing amplifier, was somewhat suppressed due to the time devoted to finding the best control circuit to use in this compressor. It is believed that the control circuit developed in this thesis will meet the most rigid specifications and is most satisfactory. It also is believed that the associated circuits required to make the control circuit a complete system do not make the best use of the control circuit. In designing the associated amplifier stages, no attempt was made by the author to optimize the design from a standpoint of stability or gain. Time did not permit a complete investigation of methods of improvement of the compressor system such as was done on the control circuit.

Comparison with Criteria for Ideal Remote Broadcast Compressor

Since the amplifying and compressing characteristics of this compressor are acceptable, it would be advantageous to list the criteria for an ideal remote broadcast compressing amplifier from Chapter I and compare the complete compressor with them.

1. light weight
2. rugged
3. contains its own power supply
4. small in size
5. simple circuits, requiring no adjustments
6. extremely dependable

A photograph of the assembled compressor, without the case, is shown in Plate 1. From this photograph it may be seen that certainly this compressor is small in size. It could be made even smaller by replacing the three regular transformers with small transformers designed to be used with transistors. It is also light in weight. The complete compressor and its battery power supply weigh less than five pounds. When mounted in its case, the compressor will be extremely rugged. The transistors are essentially independent of shock and vibration. The modular assembly of the various stages of the compressor insure maximum mechanical reliability. Although it is not shown in the photograph, the battery power pack will be about the size of the circuit module. The circuits of this compressor are fairly simple and straight forward. The only adjustment that is necessary is to set the output to the desired level. Once this is done, no other adjustments are necessary. The values of the components are not critical. It might be a little difficult

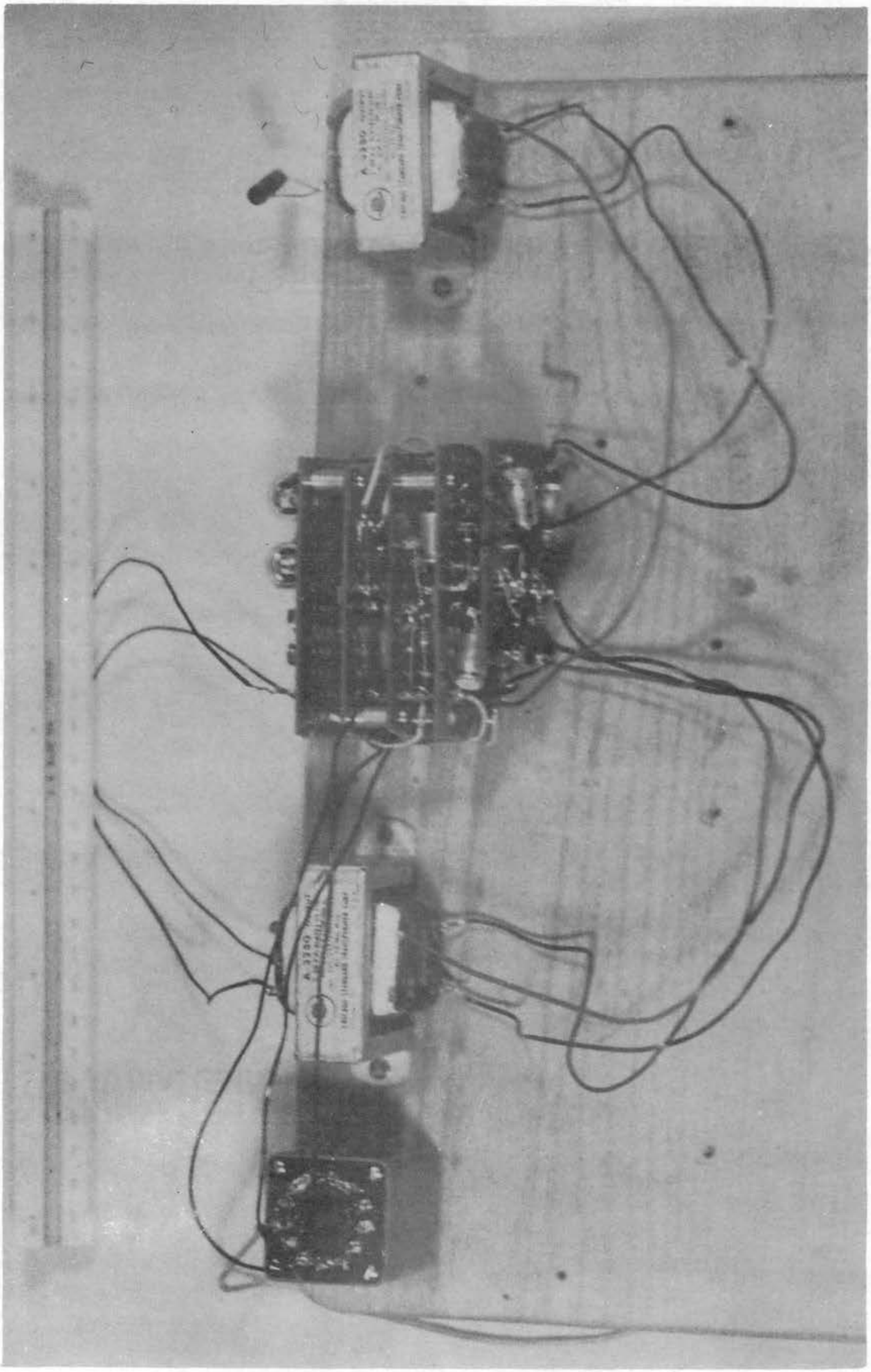

Plate 1. Photograph of Compressor

to service the compressor due to the modular assembly of the various stages. However, tests proved the compressor to be very dependable, and it should require very little servicing other than periodic battery replacement. Thus, it could be said that the compressor has met the requirements for a suitable remote broadcast compressing amplifier set forth in Chapter I.

Suggestions for Future Study

Although the compressor developed in this thesis is quite satisfactory, it should be noted that there are many possible ways to improve it. One example would be to add another control circuit to the output of the compressor. This would flatten the variation of the output of the compressor even more. Negative feedback could be incorporated in the compressor circuit. This probably would decrease the harmonic distortion to almost zero. The control circuit might be used to control the amount of feedback on a stage of amplification and, in this way, control the gain of the amplifier. The control circuit by itself could be used in many types of devices.

It is also possible that a thermistor could be used as a variable resistance for gain control by feedback as discussed in Chapter II. Although this circuit was not designed to be used for "instantaneous compression," it possibly could be used for this purpose by proper adjustments and design of the rectifier stage.

It should be obvious that this thesis only "scratches the surface" of the many means of using transistors in automatic gain control devices. It is hoped that this thesis also has provided some useful basic information for the design of automatic gain control devices using transistors.

Literature Cited

1. Langford-Smith, F. Radiotron Designer's Handbook. Glebe, Australia: Simmons, Ltd. Fourth Edition. (Wholly reproduced in the U. S. A. under direction of the Radio Corporation of America, Harrison, New Jersey, 1953), p. 806.

2. Angell, James B. and Edwin J. Podell. Design of Junction Transistor Audio Amplifiers. (Reprinted from Philco Tech. Rep. Division Bulletin, January and February, 1955). Philadelphia, Pa.: Philco Corporation, Government and Industrial Division.

3. Kiver, Milton S. Transistors in Radio and Television. First Edition. New York: McGraw-Hill, 1956, p. 155.

4. Seely, Samuel. Electron Tube Circuits. First Edition. New York: McGraw-Hill, 1950, p. 81.

5. Coblenz, Abraham and Harry L. Owens. Transistors Theory and Applications. New York: McGraw-Hill, 1955, p. 102.

6. "IRE Standards on Solid-State Devices, Methods of Testing." Proceedings of the I R E (November, 1956), p. 1544.

7. Manufacturer's Data for Transistor Type 301. Bulletin No. DL-S-551. Dallas, Texas: Texas Instruments, Inc., August, 1955.

VITA

Gerald Leslie Mayfield, Jr.

Candidate for the Degree of

Master of Science

Thesis: A TRANSISTORIZED COMPRESSING AMPLIFIER

Major Field: Electrical Engineering

Biographical:

Personal data: Born at Shamrock, Texas, October 1, 1935, the son of Gerald L. and Inez Mayfield.

Education: Attended grade school in Shamrock, Texas; graduated from Shamrock High School in May, 1953; completed requirements for the Bachelor of Science degree with a major in Electrical Engineering at Oklahoma State University in January, 1958.

Professional experience: Was employed by the Department of Radio and Television Services at Oklahoma State University on a part time basis from February, 1954, to November, 1957; served as Chief Engineer of this department from September, 1954, to November, 1957; was employed in the capacity of Chief Engineer by Radio Station K U S H in Cushing, Oklahoma, from March, 1956, to November, 1957, also on a part time basis; these jobs provided the background and inspiration for the material presented in the thesis; he holds a First Class Radio Telephone Operator's License and an Amateur Radio License, W5TOK; he was listed in Who's Who in American Colleges and Universities; he also is a member of Eta Kappa Nu, electrical engineering honor society; Sigma Tau, engineering honor society, and Blue Key, leadership fraternity.