INVESTIGATION OF ELECTRICAL METHODS FOR DETECTION OF CRACKS IN VANES AND COMPRESSOR BLADES

By

CARL EDWARD DUMESNIL

Bachelor of Science in Mechanical Engineering

Lamar State College of Technology

Beaumont, Texas

1961

Submitted to the Faculty of the Graduate School
of the Oklahoma State University
in partial fulfillment of the requirements
for the degree of
MASTER OF SCIENCE
August, 1962

INVESTIGATION OF ELECTRICAL METHODS FOR DETECTION OF CRACKS IN VANES AND COMPRESSOR BLADES

Thesis Approved:

R L Lowery
Thesis Adviser

R.E. Chapel

Robert MacVicar
Dean of Graduate School

ACKNOWLEDGEMENT

The writer wishes to express his appreciation to all those who made possible this investigation and thesis.

He particularly wishes to thank his adviser, Dr. R.L. Lowery, and Professor R.E. Chapel for their continued help and support throughout this entire study.

He also wishes to acknowledge the help of his undergraduate associates Phil Wilcox and John Leland and those not directly associated with the investigation but without whose help this thesis could not have been possible, John McCandless, George Cooper, and Lael Benjamin.

The writer would like to express his gratitude to his wife, Gail, for typing this thesis and for her continued patience and support during the past two years.

TABLE OF CONTENTS

LIST OF TABLES

LIST OF FIGURES

FOREWORD

This thesis represents an investigation of the potential drop method and electrical resistance techniques for detecting cracks in compressor blades and stator vanes. The investigations which are discussed in this report represent a portion of the duties of the author while assigned to the Nondestructive Testing Project as a graduate research assistant. The Nondestructive Testing Project was conducted for the Directorate Materiel Maintenance of the Oklahoma City Air Materiel Command under contract number AF 34(601)-9879.

CHAPTER I

INTRODUCTION

In maintaining a jet engine it is often necessary to remove it from service to repair and check its parts for soundness and safety. In doing so the compressor blades and the stator vanes in the shrouds must be checked for fatigue cracks and flaws. These fatigue cracks need to be found in order to insure the operator safety from engine failure. If a blade with a small fatigue crack is allowed to be reinstalled into the engine a limited amount of continued operation could cause failure of the blade and consequently complete failure of the engine itself.

Presently, the method used to detect the cracks is by fluorescent penetrants. These penetrants work well for visible cracks and those cracks which are well away from the fixed ends of the blade. Also, surface sludge often causes the penetrant method to show false cracks. Due to these considerations, other methods of detecting these cracks have been investigated. It is the purpose of this report to investigate the feasibility of electrical methods to detect minute cracks in the compressor blades and stator vanes in the shroud.

The methods investigated in this report are the elect-

rode potential drop method and electrical resistance techniques. The electrode potential drop method is mainly used to determine such things as places of poor bonding for laminated sections (1)[1], coating thicknesses, and the depth of cracks. It has been stated that this method could be used for detecting cracks.(2). In this method contact between the surface and the electrode is very critical. A poor contact would give a faulty reading because of an increase in resistance. For a very minute crack in the blade to be investigated this contact resistance could be very much larger than the resistance of the crack in question. By use of an electrode spring loading device, such as that shown in Figure 1, blades and vanes which are examined separately can easily be adapted and this contact resistance can be neglected. Because of space limitations spring loading such as this is very difficult to obtain to use on vanes assembled in the shrouds.

In using electrical resistance techniques a measurement of the resistance due to the crack can be obtained by use of a bridge circuit. A Wheatstone bridge could be used, but due to the contact resistance again and also the very small amount of resistance to be measured this bridge cannot be used. For extremely small resistances a Kelvin Double bridge is designed so that contact resistances can be avoided. A special form of the Kelvin Double bridge is the Electell

---

[1]Parentheses refer to Selected Bibliography.

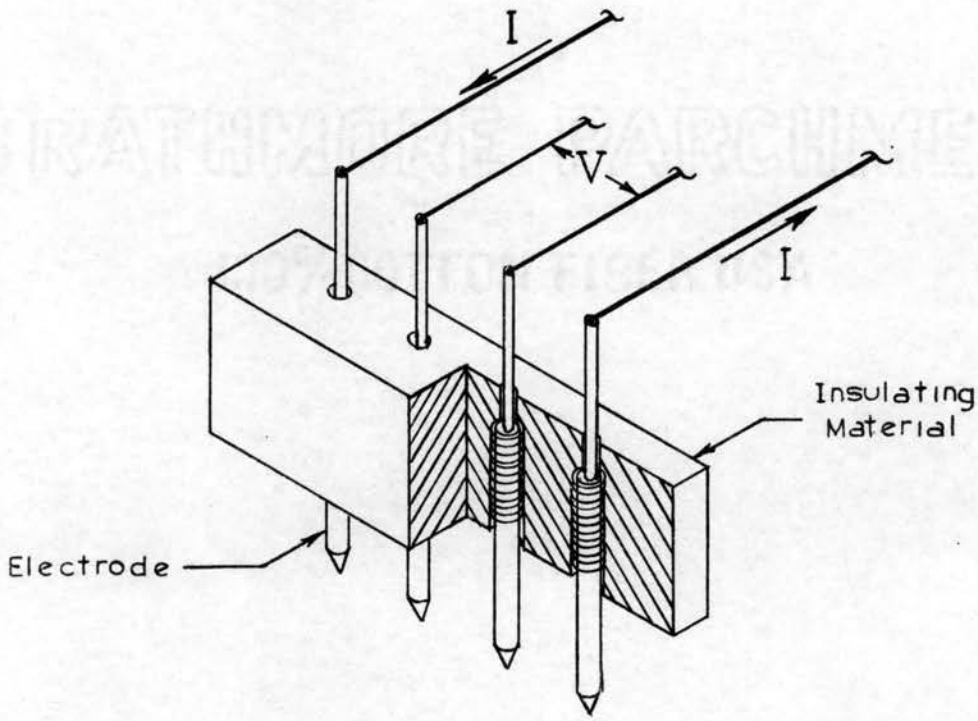

FIGURE 1. Spring loaded electrode assembly.

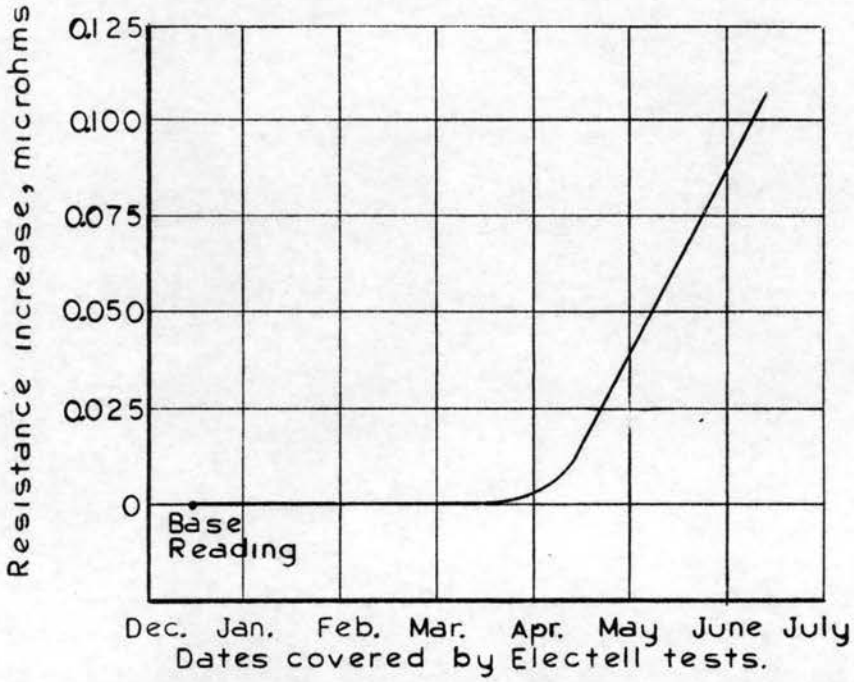

FIGURE 2. Resistance curve showing fracture in one of the main crankpins of a 4-6-2 steam locomotive.

Crack Detector (3) which is used for resistance measurements of fatigue cracks in heavy parts, such as railroad rails. In using the Kelvin bridge for measuring the resistance of compressor blades and vanes it is necessary that the current be small enough so that a heating effect will not be encountered. The resistance of these blades and vanes is so small that a large current would cause heating and thus increase the resistance greatly.

As mentioned previously, both of these methods of measurement have been used extensively in nondestructive testing and the evaluation of other parts suspected of being faulty. In this investigation no previous work has been found which uses either of these two methods directly for detecting cracks and flaws in compressor blades or vanes in shrouds. Theoretically, these methods are adaptable to detecting cracks.

Electrical methods of crack detecting are adaptable to any part which is a current conductor. The technique of applying the electrical methods is the major changing factor. For each part to be inspected a jig is needed in order to take care of the contact resistance, whether by spring loaded electrodes or any other, the way in which the current is applied, and the device used to analyze the actual reading. With the right kind of jig a blade may be tested for soundness without being removed from the engine if it is possible to get to it. Also, a time study may be made on a particular blade by the use of electrical methods. If a blade is known

to be good, its resistance may be measured and recorded. After a period of service time its resistance may be measured again. If the blade is still good the same resistance reading should occur. However, if a fatigue crack should be developing an increase in the resistance should result. If after another period of service time the blade resistance is again measured, the resistance should again be higher than the previous reading due to further fatigue. In this way a time study may be kept on any particular blade, although such a study would be expensive and complicated. An example of what a time diagram may look like is shown in Figure 2, which is a resistance curve showing fracture in one of the main crankpins of a 4-6-2 steam locomotive (3).

Even though the electrical methods are limited in their use - such as keeping the same temperature throughout the investigation, making good contact, and taking the readings in the same locations - they are still very feasible to evaluate the fitness of a blade. Although these methods have been used mostly for other types of investigations, this analysis may give a good groundwork for further, more detailed study of crack detection.

CHAPTER II

THEORY OF ELECTRICAL METHODS

Potential Drop

The basic principle involved in the potential drop method is the measure of the voltage between two points in which there is direct-current conduction in one material. This potential measured is directly proportional to the resistance of the material which is dependent only upon the resistivity of the material,

$$E/I = K\rho$$

where E is the potential, I is the current, K is a constant, and ρ is the resistivity.

In using electrodes such as shown in Figure 1, a field of constant current lines will be setup as shown in Figure 3a. The two potential electrodes, between the current electrodes, will set up a field of equipotential lines which will cross the lines of constant current perpendicularly as long as the conduction material surface is continuous between the electrodes. For a discontinuous surface, such as would result if a crack were present, the current lines and lines of constant potential would be disrupted and consequently the voltage reading would be different as compared to that of a

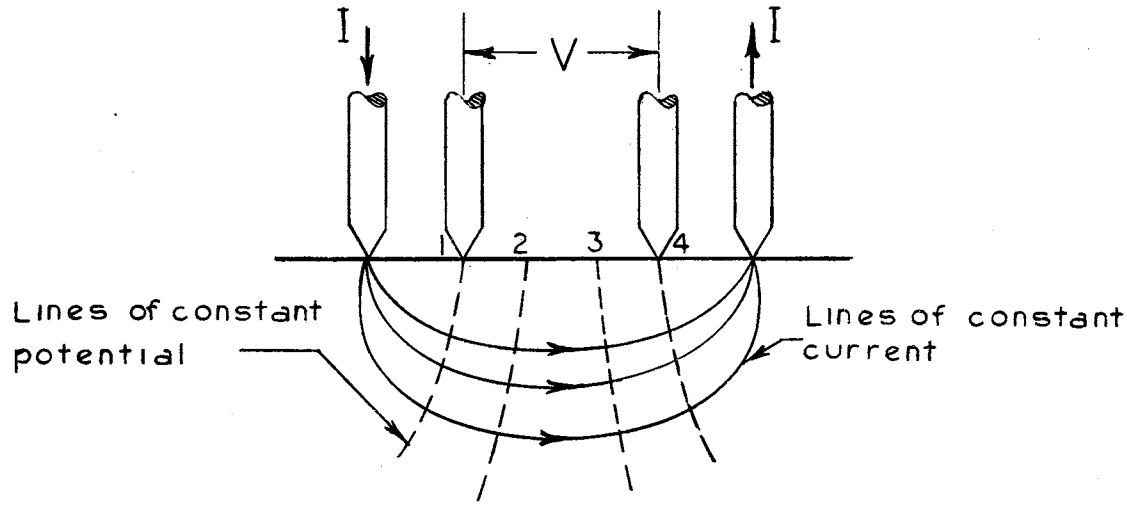

(a)

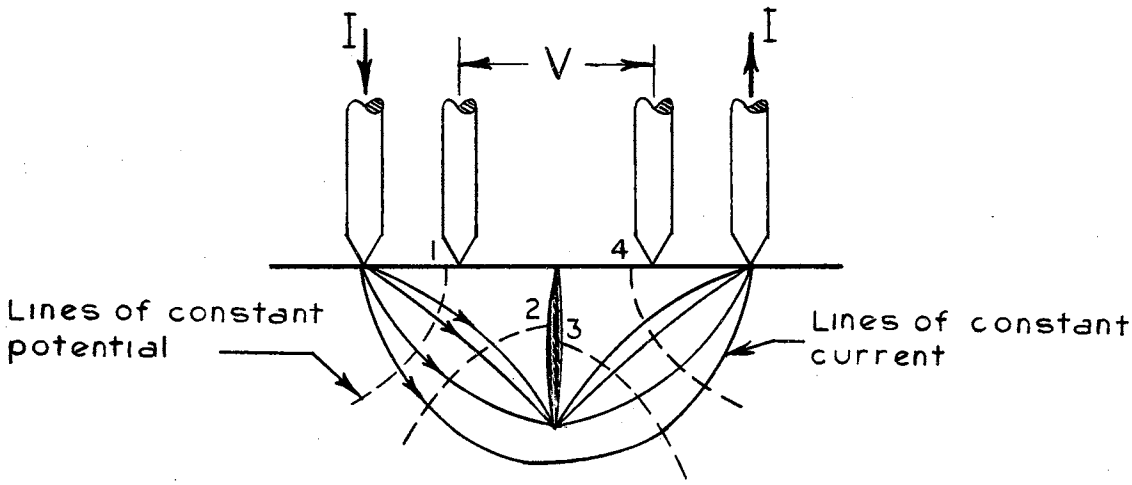

(b)

FIGURE 3. Principle of potential drop method.

continuous material as shown in Figure 3b.(4).

In using this approach it is needed to determine the potential between two points of a material which is known to be good and continuous. This measured voltage would be the standard and any potential measured from the same material with the same electrode spacing but on a different specimen and with a relatively higher potential could be designated as cracked or discontinuous. In measuring the potential of the compressor blades and vanes it was assumed that these were homogeneous, for a nonhomogeneous blade would exhibit characteristics similar to a cracked blade.

In using this method of approach it is very difficult to obtain results with good accuracy for very small voltages. Because of this and also the contact resistance error the electrical resistance techniques were investigated.

Electrical Resistance Techniques

The Kelvin bridge compares the unknown with a standard calibrated and variable resistance arm, R, shown in Figure 4. The main difference in the Kelvin bridge from the Wheatstone bridge is that it has two additional arms, a and b. The ratio a/b is kept the same as the ratio A/B, therefore, $X = R(A/B)$.

The resistances R and X are low-valued four terminal resistors connected as shown and Y, which joins the two, is a special low-resistance yoke. The sliding contact on R is the only terminal that can cause contact trouble, therefore,

the current will flow through the low-resistance Y rather than the higher resistance path a-b. In this way the troublesome contact is in series with resistors a and b so that its effect is small.

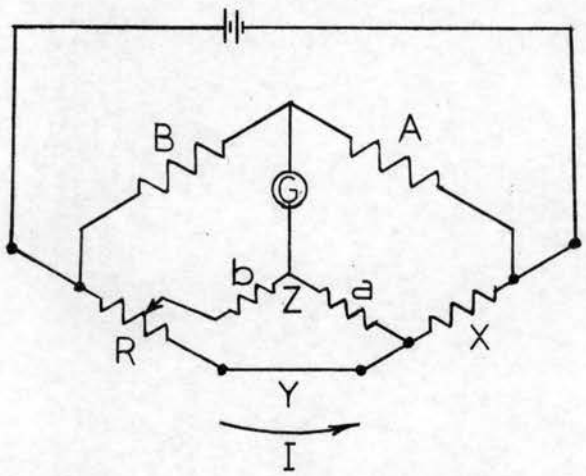

FIGURE 4. Kelvin bridge principle.

Basically, the electrical resistance techniques are much the same as the principles of the potential drop method. The same electrode configuration can be used and also the same type of analysis can be made. By connecting the leads of the two potential electrodes to the potential poles of a Kelvin Double bridge and by a direct-current conduction through the outside electrodes from the current poles, a direct reading in ohms can be obtained from the bridge scale.

For one given material the potential measurement will give the same resistance reading provided the electrode spacing is kept the same and the cross-section between the electrodes does not vary from one specimen to the next. In this way only the continuity between the potential elect-

rodes will cause the resistance to vary. If the specimen in question can be considered to be fairly homogeneous then each resistance reading should be the same. If a crack should occur between the electrodes the potential drop would increase due to the discontinuity and because the current is constant the resistance would increase. In this way a good specimen could be distinguished from a faulty one.

In using the Kelvin bridge more accuracy can be obtained than with the potential drop method. In the potentiometer circuit the voltage drop can be measured in millivolts to three places, whereas with the Kelvin bridge resistance can be measured down to 0.5 microhms with intervals of 0.5 microhms. In this way a small defect would change the resistance and thereby the change could be detected.

CHAPTER III

DESCRIPTION OF APPARATUS

Potentiometer Circuit

The potential drop method of analysis requires that direct-current conduction be introduced through the material while the difference of potential is measured. For the potentiometer circuit the current was supplied by a dry cell battery, and was controlled by an ammeter and rheostat. This was introduced through the outside electrodes while the potential drop was measured by a Leeds and Northrup millivolt potentiometer as shown in Figure 5.

Only separate stator vanes were tested using the potentiometer circuit to determine if the method had merit. After further investigation it was found that more accuracy was needed, therefore, the method of electrical resistance using the Kelvin bridge was investigated.

Kelvin Double Bridge

Upon first investigation of the electrical resistance methods a G.E. Portable Kelvin Double bridge was used. This bridge had two current and two potential poles in which to measure the resistance. The leads used to connect to these

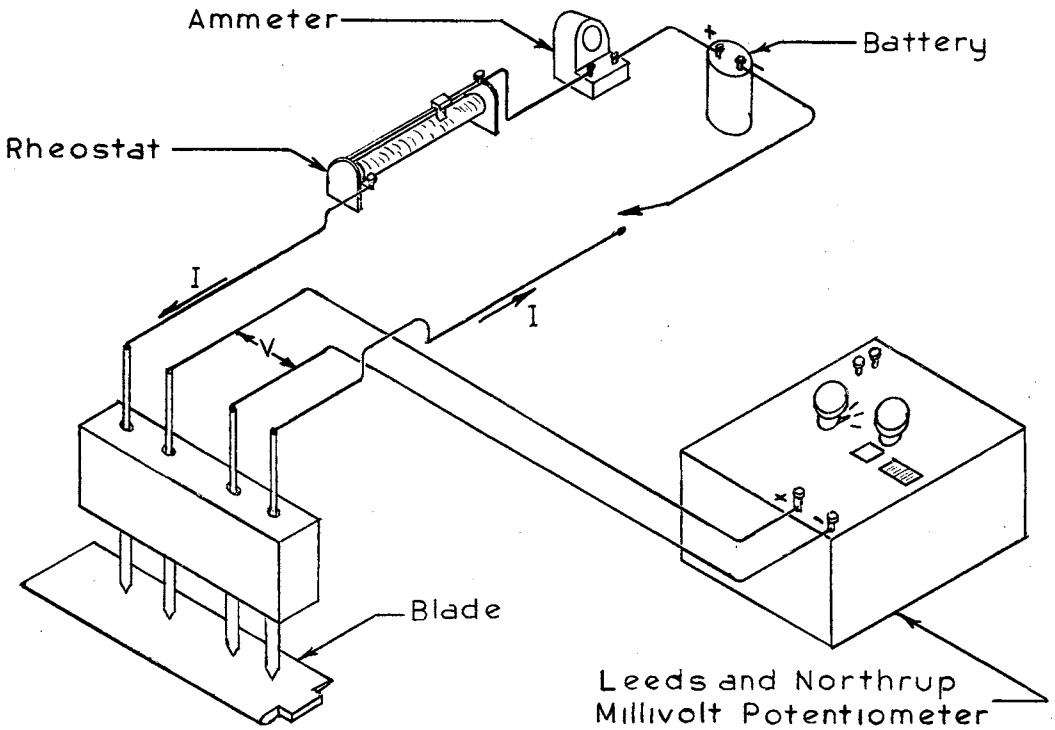

FIGURE 5. Schematic of potentiometer circuit.

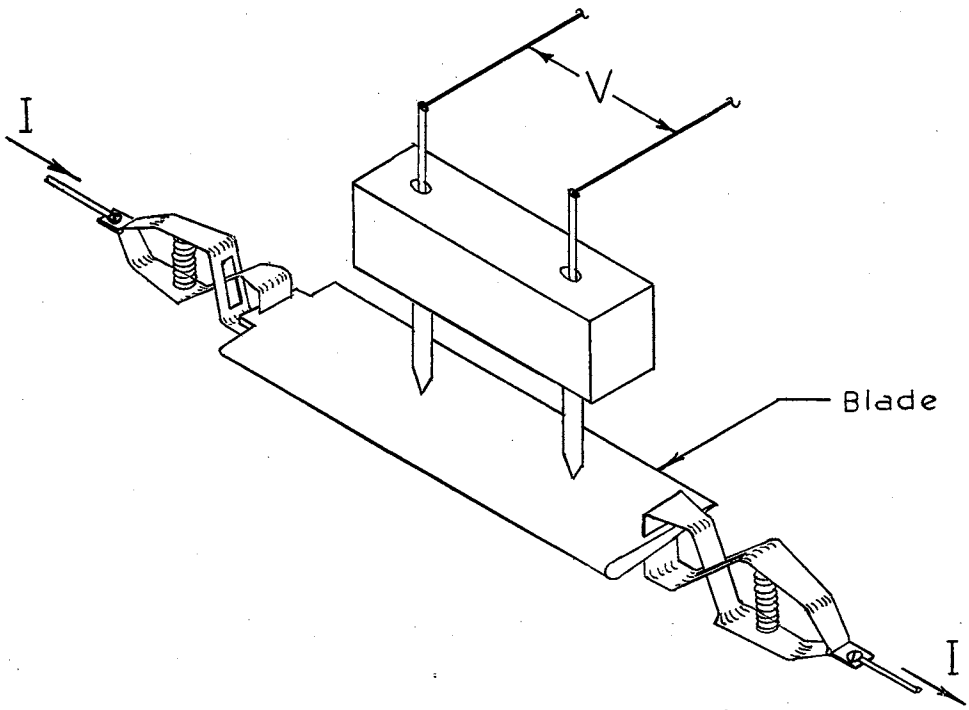

FIGURE 6. Spring loaded potential electrodes with current clamps arrangement.

poles had a current and potential lead connected to a battery cable type clamp. In this way the two clamps could be connected to each end of the specimen and a current and potential connection would be made at each end. This gave fairly good results which led to the use of a more accurate bridge, the Rubicon Portable Kelvin Double bridge.

In making measurements with the Rubicon Kelvin bridge four types of electrodes were used: (1) spring loaded potential electrodes with current battery cable type clamps, (2) Bakelite bar with potential screws and current battery cable type clamps, (3) potential alligator clips with current battery cable type clamps, and (4) scissor clamp with potential and current screws. For the first electrode arrangement the two potential electrodes made spring loaded contact in the same way as shown in Figure 1, while the current clamps were connected to each end of the blade as shown in Figure 6.

The second electrode arrangement was constructed from a Bakelite bar with screws which served as potential electrodes as shown in Figure 7. The current was introduced through clamps attached to the ends of the blade as in the previous case.

The third electrode arrangement was constructed from a Plexiglass bar with alligator clips as the potential contacts as shown in Figure 8. The current was introduced through clamps attached to the ends of the blade as in the first and second cases.

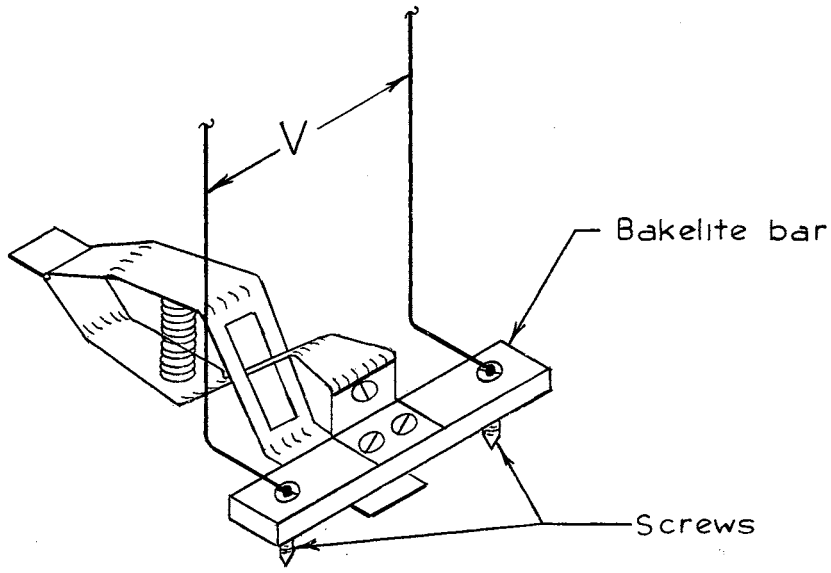

FIGURE 7. Bakelite bar with potential screw electrodes.

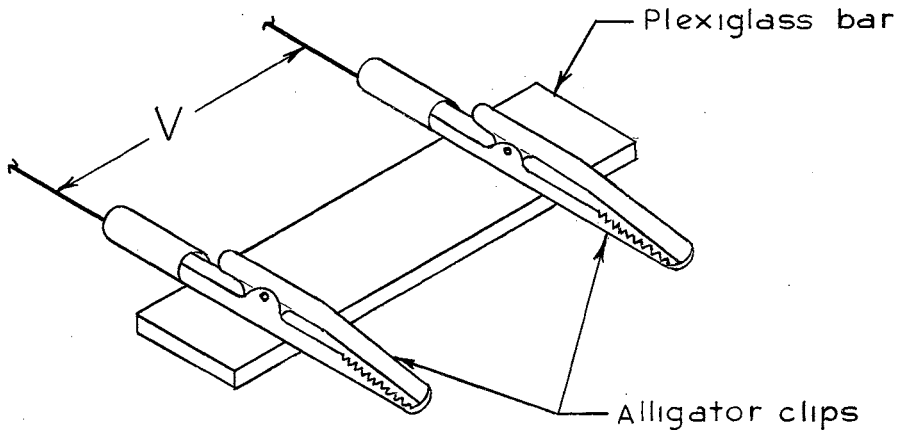

FIGURE 8. Plexiglass bar with alligator clip potential electrodes.

The fourth apparatus was a four electrode arrangement. The two outside electrodes were used to introduce the current to complete the circuit while the inside electrodes were used to measure the resistance. The electrodes were made from stainless steel screws which were pointed and silver tipped. This gave a relatively good point contact and provided good conduction and resistance to wear. The electrodes were held in place by an insulating material which was a scissor type arrangement constructed from a black phenolic plastic. The stiffness of the insulating material provided a cantilever type spring which served to provide good contact. This electrode arrangement was connected to the Kelvin bridge as shown in Figure 9.

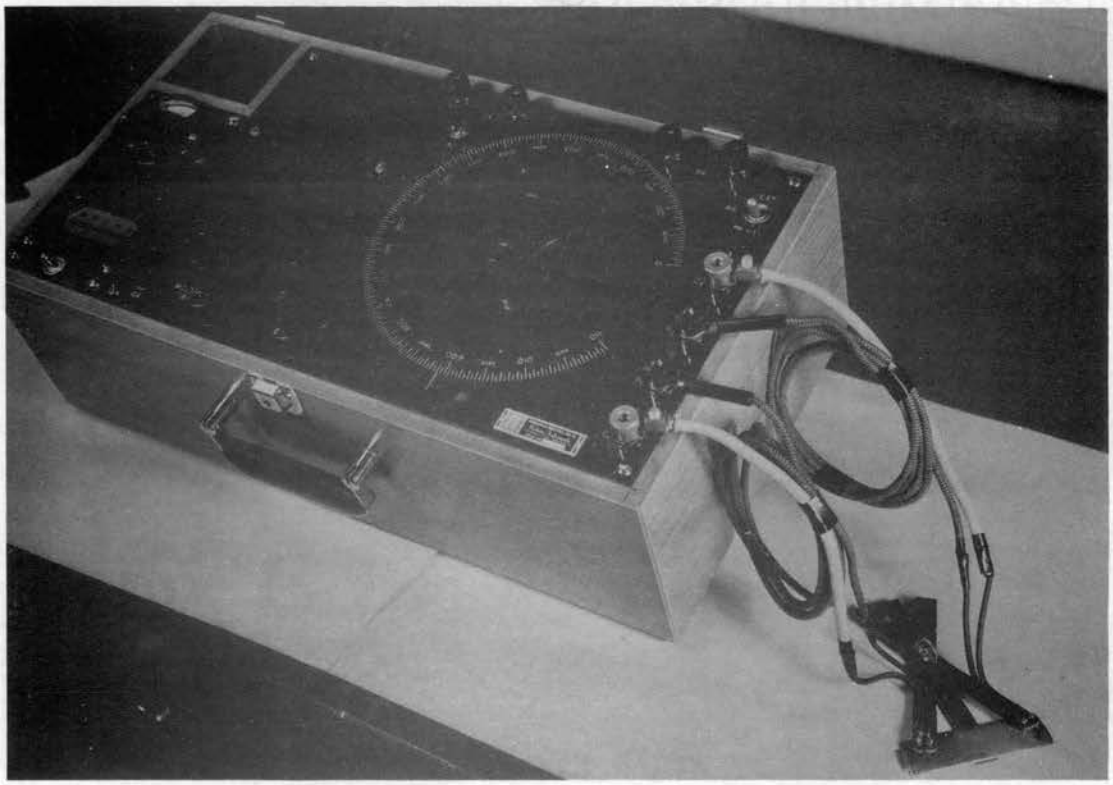

Figure 9. Rubicon Kelvin bridge with scissor electrode arrangement.

CHAPTER IV

PROCEDURE, RESULTS, AND DISCUSSION

Potential Circuit

Tenth Stage Stator Vanes

Using the circuit shown in Figure 5, several J-57 tenth stage stator vanes, one known cracked vane and a few good ones, were placed under the spring loaded electrode arrangement with 1.0 in. potential electrode spacing and several millivolt readings were taken using a current of 0.4 ampere. It was found that the millivolt readings were relatively close for the good blades and as long as the electrodes were on the good end of the cracked blade its millivolt reading was close also as shown in Table I. As soon as one of the potential electrodes crossed the crack in the blade the millivolt reading was found to increase approximately 37%. This gave a favorable result and it was concluded that this type of analysis could be made on compressor blades and vanes.

Upon further investigation it was found that the spring loaded electrode arrangement could not be adapted to the vanes assembled in the shroud and without this spring load contact resistance introduced a large error.

TABLE I

MILLIVOLT READINGS USING POTENTIOMETER CIRCUIT

Blade	Millivolt Readings	
1	0.190	0.190
4	0.189	0.196
6	0.186	0.195
10 C*	0.214	0.260

* C denotes cracked blade.

Electrical Resistance Techniques

Tenth Stage Stator Vanes

In a preliminary analysis using a double bridge several runs were made using a G.E. Portable Kelvin Double bridge. For this run of tests the battery type clamps, which each had a current and a potential lead, were clamped to each end of the blade. No stipulation was made as to where the blade was clamped each time but simply clamped at each end. In doing this an error of approximately 12% was introduced for a spacing increase of 1/8 in. A slight increase or decrease in the distance between the clamps increased or decreased the resistance respectively.

Using this procedure a series of ten J-57 tenth stage vanes, such as that shown in Figure 10, were tested making seven runs on each blade. The results of this test are given in Table II. From this table it can be seen that

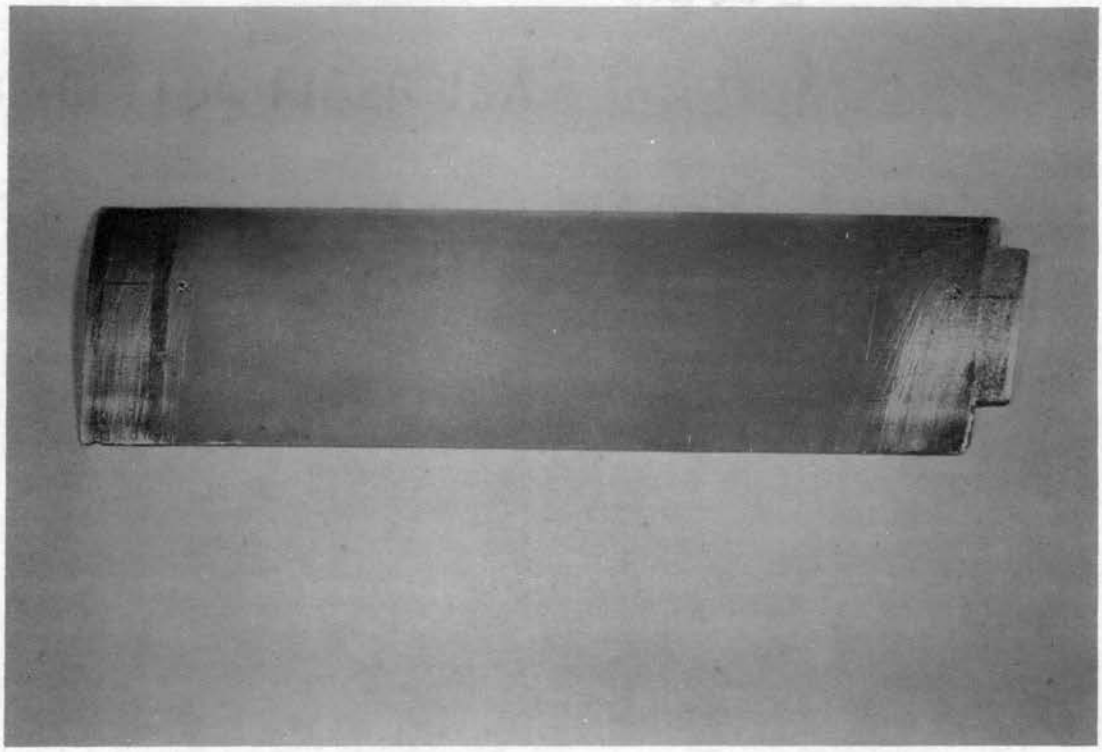

Figure 10. J-57 tenth stage stator vane.

blade numbers 3, 8, 9, and 10 have much higher resistances than the others. Blade 9 has a known crack which can be seen in Figure 11, and blade 10 has a much finer crack which can also be seen in Figure 11. For vanes 3 and 8, it was not known whether they were cracked but were to be checked at a later time by electrical resistance techniques and also by other means - such as penetrants, magnetic particles, and ultrasonic transducers. No cracks were found, therefore, these two blades could possibly have different conducting properties which may have been caused by the hard carbon scale deposited on them.

TABLE II

RESISTANCES USING G.E. PORTABLE KELVIN DOUBLE BRIDGE

Blade	Resistance (10^{-3} ohm)							Average
1	1.59	1.50	1.50	1.50	1.48	1.50	1.50	1.51
2	1.41	1.36	1.40	1.35	1.35	1.36	1.38	1.37
3	1.55	1.60	1.62	1.57	1.51	1.60	1.65	1.59
4	1.45	1.43	1.44	1.38	1.38	1.46	1.40	1.42
5	1.40	1.37	1.40	1.40	1.38	1.45	1.38	1.40
6	1.37	1.37	1.40	1.40	1.36	1.43	1.38	1.39
7	1.39	1.35	1.45	1.35	1.41	1.43	1.48	1.41
8	1.56	1.55	1.58	1.63	1.53	1.60	1.63	1.58
9 C*	1.52	1.56	1.55	1.55	1.56	1.65	1.55	1.56
10 C	1.66	1.60	1.60	1.63	1.65	1.65	1.70	1.64

* C denotes cracked blades.

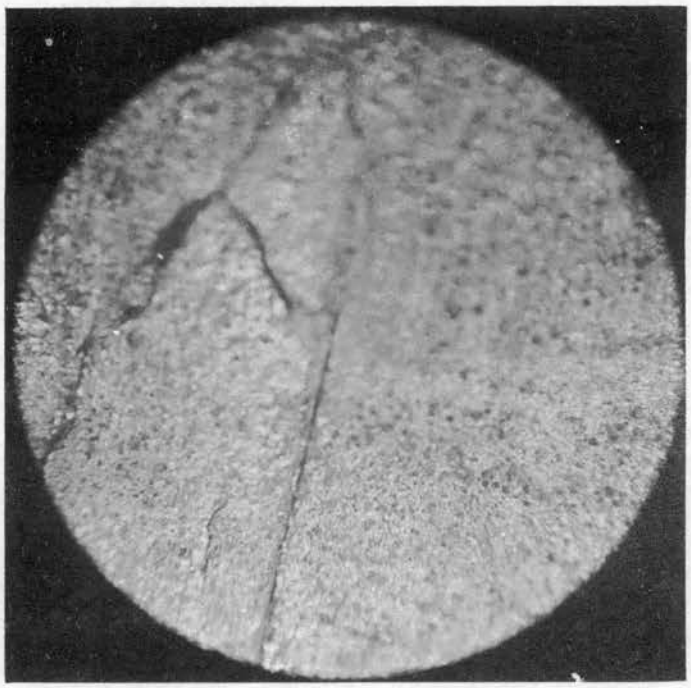

1. Blade 9

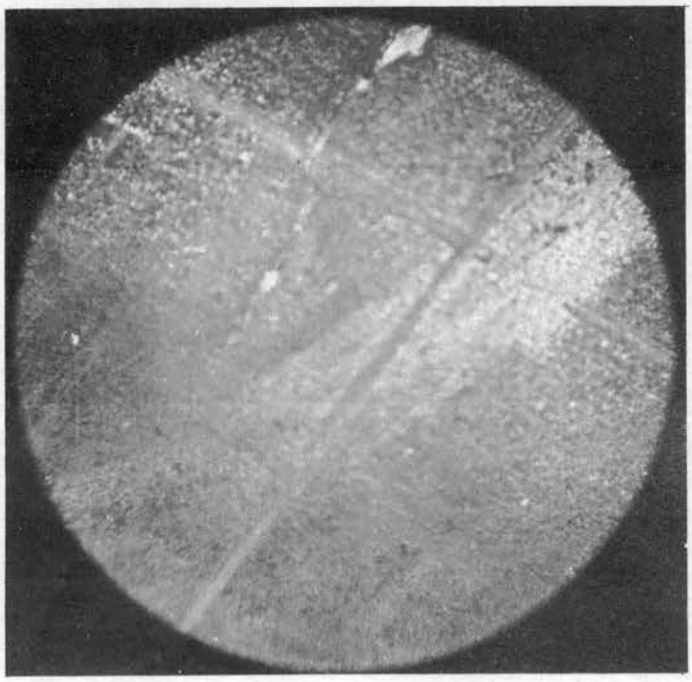

2. Blade 10

Figure 11. Magnification (25X) of cracks in tenth stage stator vanes.

From these results it can be seen that cracks which are visible and even cracks that can be seen only through a microscope can be detected by using electrical resistance techniques. However, using this type of clamping device vanes assembled in the shrouds could not be tested because of space limitations. Even though the clamping conditions were not held exactly the same each time these results were fairly favorable.

In order to investigate further the effectiveness of electrical resistance techniques, a spring loaded potential electrode arrangement was tested by passing current through the specimen by means of battery type clamps connected to each end as shown in Figure 6. This electrode arrangement along with the current leads was connected to the Rubicon Kelvin bridge and tests on the tenth stage disassembled vanes were conducted. The potential electrode spacing was set at 0.50 in. and readings were taken along the length of the vanes at six random settings. These measurements were taken approximately down the thickest cross-section of the blade.

In making this type of analysis the general location of the crack could be determined since the resistance should be the same along any constant cross-section of the blade. As can be seen from the results of this analysis, see Table III, the known crack in blade 10 gave a reading of 3.12×10^{-4} ohm when the potential electrodes were across the crack. Also from the table blades 3, 8, and 9 have higher readings than the other blades. These vanes are the same as

those in the previous case and the results in this test compare favorably to those in the previous test with the G.E. bridge. A plot of the average values is shown in Figure 12.

TABLE III

RESISTANCES USING 0.5 IN. SPACING, SPRING LOADED POTENTIAL ELECTRODES WITH RUBICON KELVIN BRIDGE

Blade	Resistance (10^{-4} ohm)						Average
1	2.014	2.140	2.100	2.110	2.140	2.290	2.13
2	2.040	2.210	2.070	2.220	2.010	2.010	2.09
3	2.250	2.330	2.240	2.260	2.380	2.580	2.34
4	2.065	2.185	2.110	2.125	2.110	2.265	2.14
5	1.960	2.110	2.120	2.110	2.020	2.410	2.12
6	2.110	2.110	2.080	2.070	2.150	2.150	2.11
7	2.045	2.005	2.070	2.145	2.145	2.275	2.11
8	2.390	2.370	2.395	2.405	2.410	2.330	2.38
9 C*	2.320	2.265	2.150	2.190	2.280	2.275	2.25
10 C	2.310	2.320	2.370	2.337	2.410	3.120	2.48

* C denotes cracked blades.

Using the same arrangement and procedure mentioned above with the exception that the potential electrodes were spaced at 1.0 in. and the readings were taken along the trailing edge of the vanes, the resistance of the blade was measured at 1, 2, and 3 in. from the root end. The results of this test are shown in Table IV, and it can be seen that

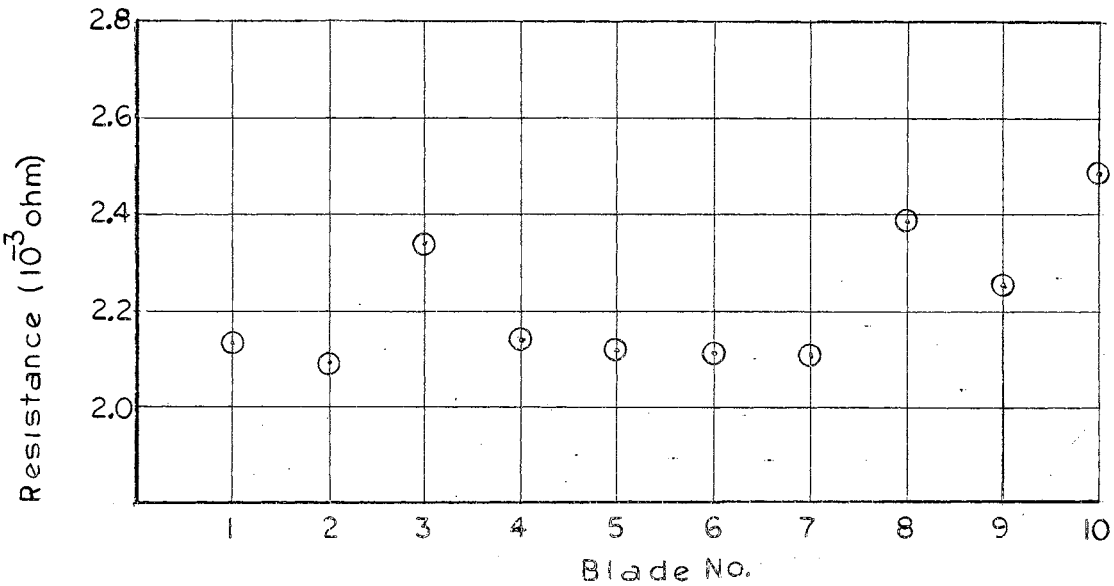

FIGURE 12. Average value plot with potential electrode spacing of 0.5 in.

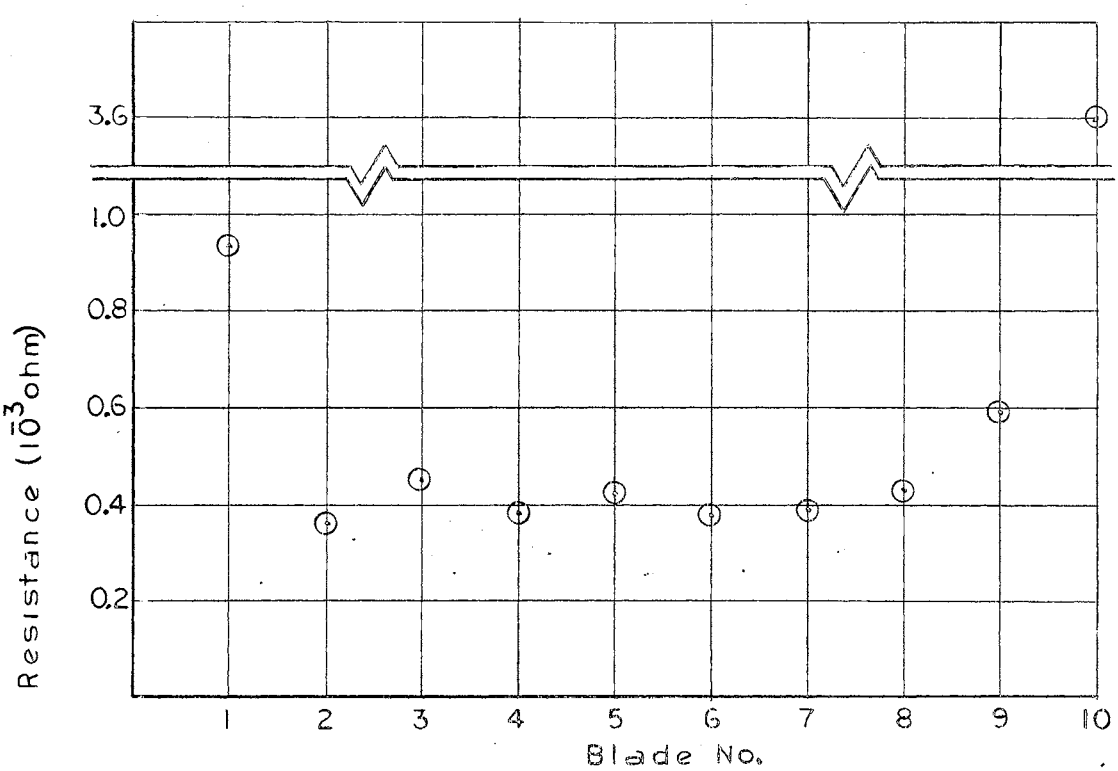

FIGURE 13. Average value plot with potential electrode spacing of 1.0 in.

these readings compare fairly well with those of the previous test. However, by taking a larger spacing and not as many intervals the averages are not as close and uniform as before. As in the previous results blades 3, 8, 9, and 10 have higher resistances. Also, the first reading on blade 1 has an exceptionally high resistance as compared to the others. This resulted in raising the average much higher than the others. A plot of the average values are shown in Figure 13.

TABLE IV

RESISTANCES USING 1.0 IN. SPACING, SPRING LOADED POTENTIAL ELECTRODES WITH RUBICON KELVIN BRIDGE

Blade	Resistance (10^{-3} ohm)			Average
1	1.900	0.410	0.498	0.936
2	0.363	0.377	0.343	0.361
3	0.443	0.434	0.477	0.451
4	0.395	0.391	0.366	0.384
5	0.469	0.389	0.403	0.420
6	0.390	0.383	0.365	0.379
7	0.450	0.395	0.338	0.394
8	0.414	0.439	0.463	0.439
9 C*	0.402	0.424	0.949	0.592
10 C	9.570	0.444	0.797	3.604

* C denotes cracked blades.

For further investigation of the vanes like the one shown in Figure 10, the electrode arrangement shown in

Figure 7 was used while current was introduced through clamps connected to the ends of the blades. The potential screws were spaced at 2.813 in. and each vane was punched at 0.344 in. and 3.157 in. from the end opposite the root and 0.625 in. up from the trailing edge. These were punched in order that exactly the same resistance would be measured each time and also it would be from the same location on each blade.

Using the above electrode arrangement four runs were made on the ten vanes. The results of this test are shown in Table V.

TABLE V

RESISTANCES USING 2.813 IN. SPACING ON BAKELITE BAR WITH POTENTIAL SCREW ELECTRODES

Blade	Resistance (10^{-3} ohm)				Average
1	1.146	1.149	1.148	1.148	1.148
2	1.140	1.140	1.140	1.138	1.140
3	1.300	1.305	1.306	1.312	1.306
4	1.186	1.190	1.193	1.193	1.191
5	1.163	1.167	1.163	1.160	1.163
6	1.158	1.165	1.163	1.160	1.162
7	1.174	1.170	1.172	1.173	1.172
8	1.300	1.296	1.304	1.302	1.301
9 C*	1.265	1.255	1.256	1.270	1.262
10 C	1.352	1.350	1.365	1.367	1.359

* C denotes cracked blades.

From this table it can be seen that the results are the same as in the previous tests. Vanes 3, 8, 9, and 10 all have much higher resistances than the other blades.

One other test was made on the vanes previously mentioned. The electrode arrangement used was that shown in Figure 9. The potential electrodes were spaced at 2.75 in. and runs were made on the blades down the thickest cross-section, on the leading edge, and on the trailing edge. The results are shown in Table VI.

TABLE VI

RESISTANCES USING 2.75 IN. POTENTIAL ELECTRODE SPACING WITH SCISSOR ARRANGEMENT

Blade	Resistance (10^{-3} ohm) Center	Leading Edge	Trailing Edge
1	1.12	1.17	1.28
2	1.10	1.17	1.25
3	1.26	1.21	1.38
4	1.14	1.21	1.31
5	1.12	1.18	1.29
6	1.13	1.17	1.29
7	1.12	1.18	1.34
8	1.26	1.20	1.62
9 C*	1.23	1.29	1.53
10 C	1.70	1.38	1.47

* C denotes cracked blades.

These results are very similar to those in the previous cases.

Seventh Stage Vane and Shroud Assembly

Using the electrode arrangement shown in Figure 7, a section of a J-57 seventh stage vane and shroud, see Figure 14, was tested. A current clamp was connected to each individual vane to be tested and in line with the vane on the inside rim. The potential electrodes were clamped along the trailing edge with an electrode spacing of 3.25 in. The resistance readings of twenty-five vanes were taken and the results are given in Table VII.

TABLE VII

RESISTANCES USING 3.25 IN. POTENTIAL ELECTRODE SPACING WITH BAKELITE BAR ON SEVENTH STAGE VANE AND SHROUD ASSEMBLY

Blade	Resistance (10^{-4} ohm)	Blade	Resistance (10^{-4} ohm)	Blade	Resistance (10^{-4} ohm)
1	4.06	10	7.35	19	3.63
2	3.72	11	3.36	20 R	5.95
3	8.42	12	6.90	21 R	8.34
4	8.68	13 R*	9.55	22 R	5.97
5	8.67	14 R	8.74	23	8.80
6	8.65	15	10.92	24	9.45
7	9.15	16 R	9.48	25	9.22
8	8.00	17	8.65		
9	8.55	18	7.04		

* R denotes blades that had been previously rejected.

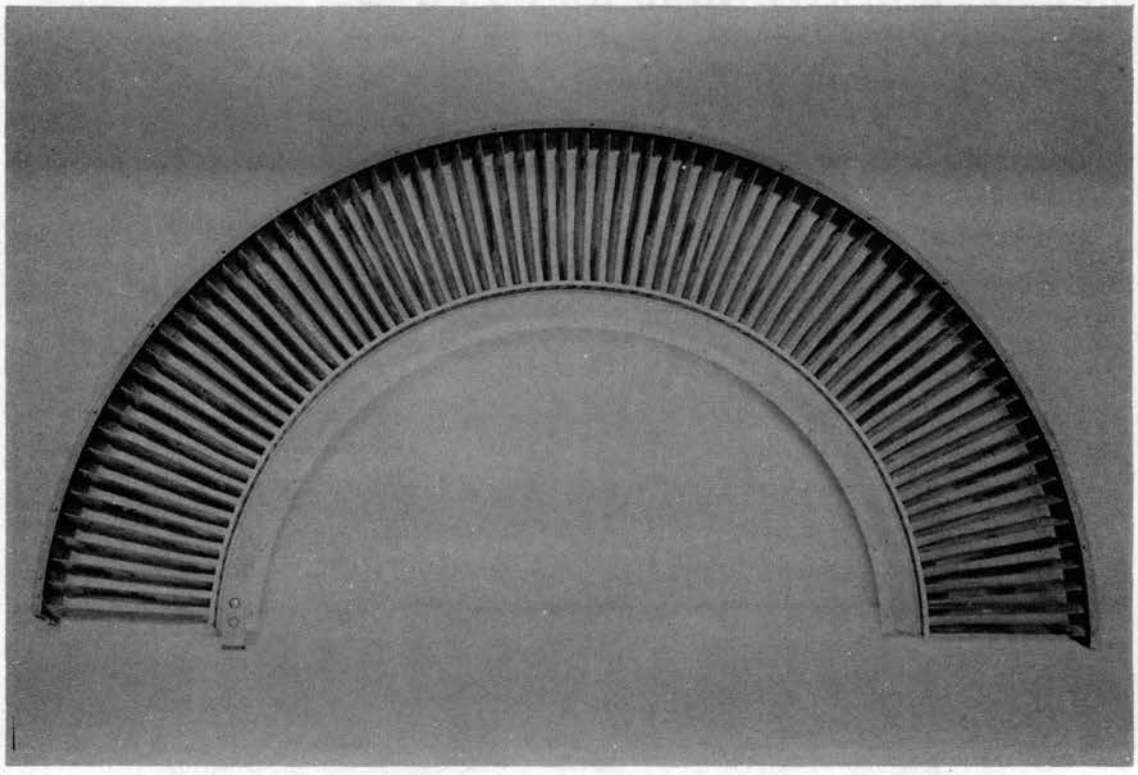

Figure 14. Section of J-57 seventh stage vane and shroud assembly.

From this table it can be seen that the points are fairly scattered. Four of the six blades which had been rejected had high resistances, but also many of the good blades had almost as high a resistance. It was not known whether the blades were rejected because of cracks or whether they were loose in the shroud.

It can be concluded from this test that this method of analysis would not work. The largest error was in the electrode arrangement used. The bar holding the potential electrodes was not flexible enough, therefore, the electrodes could not follow the curvature of the blade to make good contact.

Using this same seventh stage vane and shroud, the scissor electrode arrangement shown in Figure 9 was tested to measure the resistance. The potential electrodes were spaced at 3.25 in. and the results of the test are given in Table VIII.

As previously mentioned it was not known whether the rejected vanes were cracked or simply loose in the shroud. From the table it can be seen that the resistances of blades 13, 14, 21, and 22 are much higher compared to the others. The other vanes which were marked rejectable have high resistances, but are not significantly higher as compared to the others. All the vanes listed in the table were tested for surface cracks by means of ultrasonic transducers and it was found that blades 13, 14, 21, 22, 40, and 52 contained cracks.

This concluded the investigation made on the vanes and shroud assembly.

TABLE VIII

RESISTANCES USING 3.25 IN. POTENTIAL ELECTRODE SPACING WITH SCISSOR ARRANGEMENT ON SEVENTH STAGE VANES AND SHROUD

Blade	Resistance (10^{-4} ohm)	Blade	Resistance (10^{-4} ohm)	Blade	Resistance (10^{-4} ohm)
1	8.31	25	12.52	49 R	11.92
2	8.82	26	11.67	50	10.84
3	11.17	27	11.32	51	12.36
4	10.80	28	8.27	52	12.59
5	11.45	29	12.28	53	8.18
6	10.92	30	11.35	54 R	11.46
7	11.58	31 R	11.72	55	12.00
8	10.47	32 R	11.10	56	11.38
9	11.15	33	11.92	57	11.82
10	11.70	34	11.89	58	12.62
11	7.78	35 R	11.50	59	11.37
12	10.98	36	8.16	60	11.23
13 R*	16.75	37 R	11.70	61 R	12.00
14 R	16.13	38 R	11.55	62	8.91
15	12.50	39 R	12.18	63	10.82
16 R	11.70	40 R	11.85	64	11.20
17	11.57	41 R	12.71	65	9.50
18	11.65	42 R	11.65	66 R	10.76
19	8.47	43 R	11.21	67	12.65
20 R	11.50	44	11.40	68	10.25
21 R	14.39	45	8.16	69	11.15
22 R	15.87	46 R	11.75	70	7.90
23	11.60	47 R	11.72	71	7.84
24	11.54	48	11.60		

* R denotes blades that had been previously rejected.

Ninth Stage Compressor Blades

The techniques of electrical resistance were tested on compressor blades to try to detect minute cracks. Using the alligator potential electrode arrangement shown in Figure 8, and current clamps connected on each end of the blade, ten

J-57 ninth stage compressor blades, see Figure 15, were tested. The alligator clips were spaced at 2.875 in. and measurements were taken on the trailing and leading edges respectively. Two different runs were made on these blades and the results are given in Table IX.

TABLE IX

RESISTANCES ON NINTH STAGE COMPRESSOR BLADES USING 2.875 IN. SPACING WITH ALLIGATOR POTENTIAL ELECTRODES, RUNS 1 & 2

	Run 1		Run 2	
	Resistance (10^{-4} ohm)			
Blade	Trailing	Leading	Trailing	Leading
11	6.23	6.02	6.22	6.06
10	6.34	6.15	6.30	6.10
32	6.27	6.24	6.37	6.13
21	6.27	6.15	6.35	6.17
45	6.22	6.16	6.30	6.25
20	5.98	6.08	6.12	6.10
51 C*	6.62	6.40	6.70	6.45
1 C	6.72	6.45	6.74	6.60
14 C	6.07	6.00	6.12	5.99
48 C	6.42	6.38	6.44	6.35

* C denotes blades which were cracked.

All the cracked blades had relatively higher resistances than the good ones except for blade 14. This blade had a very fine crack in the center of the width of the blade and

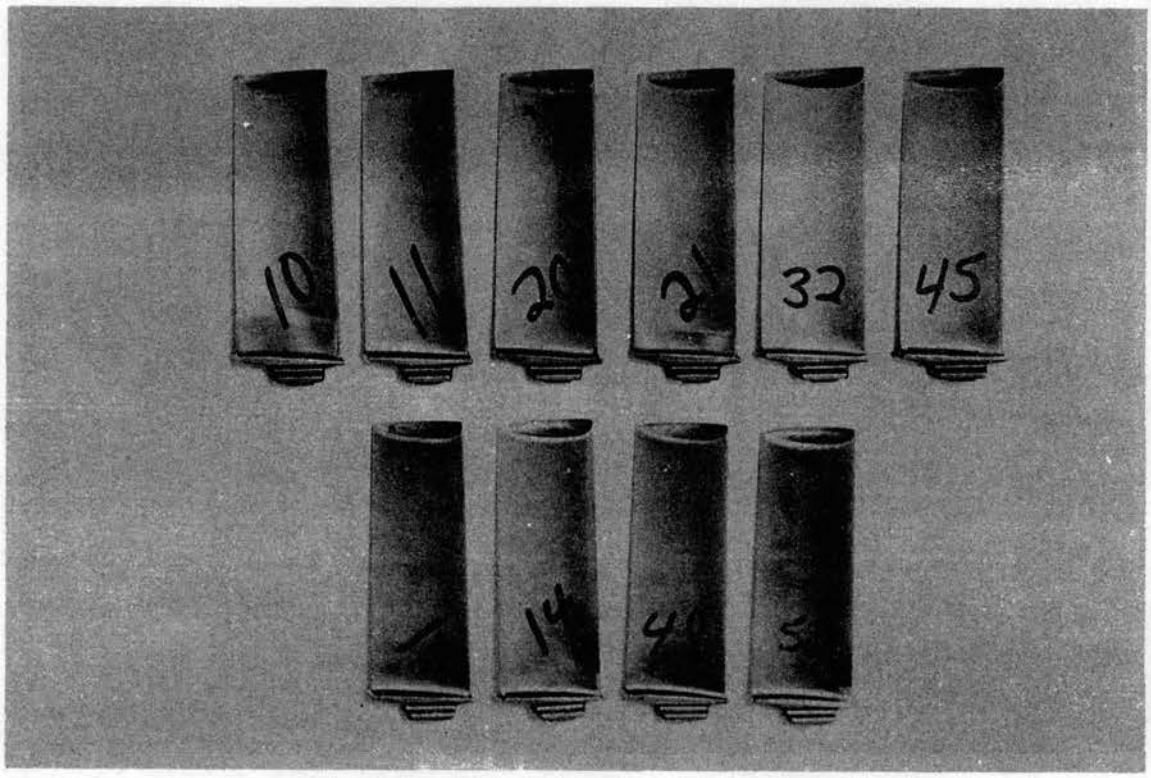

Figure 15. Ten blades from J-57 ninth stage compressor.

the other three had edge cracks as shown in Figure 16.

This procedure gave fairly good results, therefore, 55 ninth stage compressor blades were tested. The electrodes were spaced the same and the current introduced in the same manner. The results are shown in Table X.

From this table it can be seen that the results are fairly scattered. Many of the good blades have as high or higher resistances as the cracked ones. It would be impossible to distinguish all the cracked blades from the good ones.

Using the blades shown in Figure 15 and the scissor electrode arrangement in Figure 9, a fourth test was run on the compressor blades. The potential electrodes were spaced at 2.75 in. and resistance readings were recorded along the center, trailing edge, and leading edge of the blade. The results are given in Table XI.

The results of this test were much the same as those of the previous test with the alligator potential electrodes, however, the readings of the good blades seemed to be much closer together. Blade 14 again gave a much lower reading and blades 51, 1, and 48 gave relatively higher readings.

As a last test the scissor electrode arrangement was disassembled and the electrode screws were put on each side of a vise in order that the electrodes could make a good contact directly on each end of the blade. The resistance of the ten compressor blades previously shown in Figure 15 was measured and recorded. The results are given in Table XII.

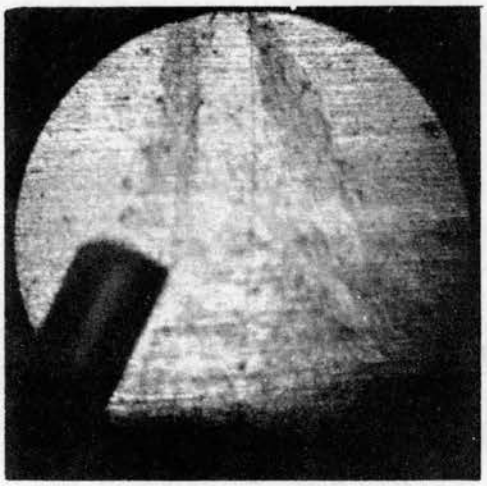

1. Blade 1

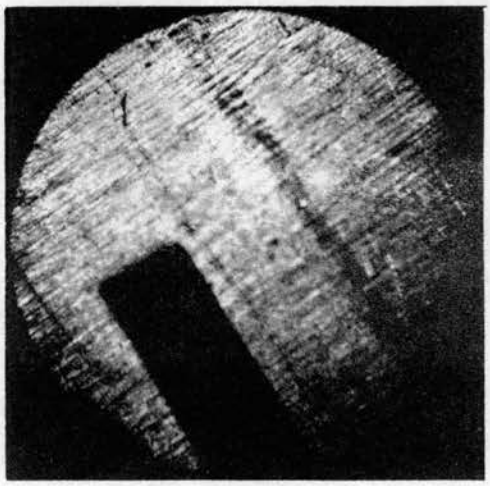

2. Blade 14

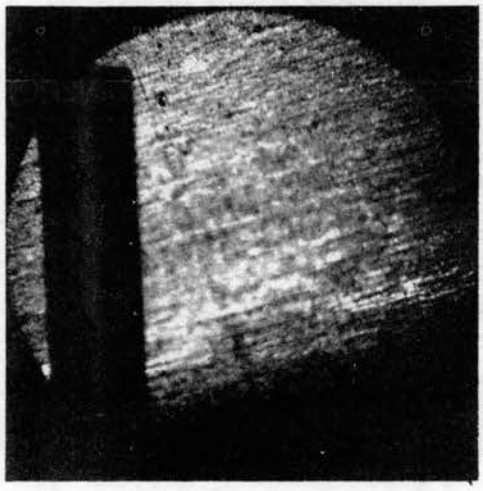

3. Blade 48

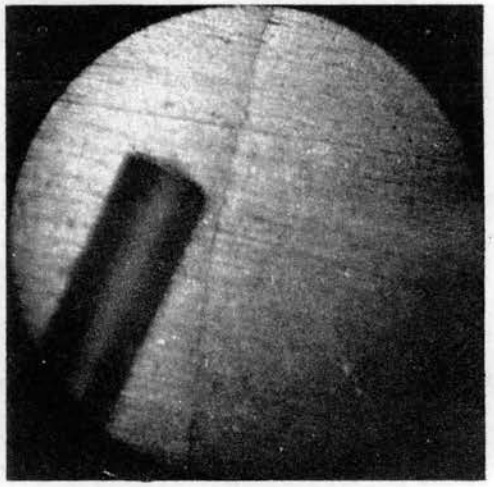

4. Blade 51

Figure 16. Magnification (25X) of cracks in ninth stage compressor blades.

TABLE X

RESISTANCES ON NINTH STAGE COMPRESSOR BLADES USING 2.875 IN. SPACING WITH ALLIGATOR POTENTIAL ELECTRODES, RUN 3

Blade	Resistance (10^{-4} ohm) Trailing	Leading	Blade	Resistance (10^{-4} ohm) Trailing	Leading
16	6.45	6.12	21	6.31	6.08
44	6.87	6.63	45	6.11	6.13
13	6.28	6.20	32	6.35	6.06
33	6.40	6.18	11	6.25	5.97
52	6.46	6.25	10 *	6.41	6.08
54	6.20	5.93	14 C	6.03	5.95
67	5.68	5.61	51 C	6.48	6.28
69	6.22	5.95	1 C	6.61	6.42
39	6.21	6.38	48 C	6.48	6.06
76	5.88	5.62	40 C	6.40	6.27
49	6.46	6.36	55 C	6.82	6.54
38	5.95	6.01	18 C	6.08	5.90
77	6.29	6.01	46 C	6.22	5.85
64	6.54	6.29	19 C	6.37	6.07
25	6.22	5.98	62 C	6.26	6.23
28	6.50	6.25	5 C	6.31	6.11
73	6.18	6.00	17 C	6.23	6.08
47	6.19	5.85	9 C	6.49	6.22
24	5.82	5.94	15 C	6.46	6.21
59	6.37	6.05	58 C	6.10	6.02
34	5.92	5.78	8 C	6.01	5.55
23	6.32	6.10	43 C	6.11	5.96
22	6.12	6.11	72 C	6.81	6.48
29	6.09	5.84	6 C	6.68	6.56
57	6.48	6.26	7 C	9.05	6.13
36	6.07	6.15	35 C	6.19	6.12
53	6.80	6.58	2 C	6.40	6.10
20	6.16	6.09			

* C denotes blades which were cracked.

TABLE XI

RESISTANCES ON NINTH STAGE COMPRESSOR BLADES USING 2.75 IN. SPACING WITH SCISSOR ELECTRODE ARRANGEMENT

Blade	Resistance (10^{-4} ohm) Center	Trailing	Leading
11	6.10	8.01	6.52
10	6.10	8.32	6.70
32	6.10	8.30	6.68
21	6.10	8.20	6.25
45	6.19	8.20	6.53
20	6.07	8.25	6.59
51 C*	6.30	8.63	6.52
1 C	6.45	8.50	7.21
14 C	5.83	7.80	6.35
48 C	6.20	8.22	6.90

*C denotes blades which were cracked.

TABLE XII

RESISTANCES ON NINTH STAGE COMPRESSOR BLADES WITH ELECTRODES DIRECTLY ON THE ENDS

Blade	Resistance (10^{-4} ohm)	Blade	Resistance (10^{-4} ohm)
11	9.00	32	9.10
21	9.00	51 C*	9.50
45	9.20	1 C	9.50
20	9.10	14 C	9.00
10	9.10	48 C	9.20

*C denotes blades which were cracked.

As can be seen from the table the results are similar to the previous test but not as good.

All the compressor blade tests were run on the ninth stage simply because there was a large number available. This concluded the testing of the compressor blades.

CHAPTER V

CONCLUSIONS AND RECOMMENDATIONS

From the previous chapter it can be concluded that of the electrode arrangements tested the scissor type would be the most feasible to use. However, using this particular arrangement cracks near the roots of the stator vanes and compressor blades cannot be detected. This is because there is not sufficient room to locate the crack between the potential electrodes.

In making resistance recordings it is necessary that all readings be taken exactly from the same location on each blade so that all good blades will have the same resistance and cracked blades will give a higher reading.

If a certain area of a blade is suspected of containing cracks then the entire resistance of the blade would not have to be measured and a much smaller electrode spacing could be used. By doing this the resistance of the crack would contribute more to the resistance measured and would give a much higher reading than a good blade. It is recommended that for either stator vanes or compressor blades a potential electrode spacing of 0.5 in. or smaller be used.

It was found that edge cracks on the compressor blades could be detected but cracks located in the center of the

width of the blade could not be found.

In making the resistance measurements all blades should be as clean as possible because the carbon scale deposit exhibits the characteristics of an insulation and if the electrodes are located on the surface of this deposit it would alter the resistance readings.

From this report it can be concluded that the electrical methods and electrode arrangements investigated here are very limited. Further study of other electrode arrangements for both the stator vanes and compressor blades is recommended.

SELECTED BIBLIOGRAPHY

1. Weaver, C.V. et al., "Nondestructive Bond Inspection Test by Electric Resistance Measurement for Complete Flat-Plate Fuel Element Subassemblies,", Symposium on Nondestructive Tests in the Field of Nuclear Energy; (American Society for Testing Materials: Baltimore, 1958); pp. 286-293.

2. McMaster, Robert C., Nondestructive Testing Handbook, (The Ronald Press Company: New York, 1959); Sec. 35.

3. Greenslade, G.R. and W.J. Eisenbeis, "Electrical Methods," A.S.M.E. Handbook, Metals Engineering - Design; (McGraw-Hill Book Company, Inc.: New York, 1953); Sec. 1-4, pp. 260-266.

4. McGonnagle, Warren J., "Electrical Methods of Nondestructive Testing"; Nondestructive Testing, (McGraw-Hill Book Company, Inc.: New York, 1953); pp. 327-345.

5. Aronson, Milton H., "Resistance Measurement," Instruments and Control Systems, (1959), pp. 1350-1355.

APPENDIX

LIST OF APPARATUS

1. Millivolt Potentiometer
   Leeds and Northrup Company
   Cat. No. 8686
   0 to 1020 millivolts

2. D.C. Ammeter
   Weston Model 785 Industrial Circuit Tester
   0 to 10 amperes

3. Slide Wire Resistor
   Central Scientific Company
   11.5 ohms, 6.2 amperes

4. Portable Double Bridge
   General Electric Company
   0 to 22 ohms

5. Rubicon Kelvin Double Bridge
   Minneapolis-Honeywell Reg. Company
   Serial No. 121867
   0 to 10.1 ohms

VITA

CARL EDWARD DUMESNIL

Candidate for the Degree of

Master of Science

Thesis: INVESTIGATION OF ELECTRICAL METHODS FOR DETECTION OF CRACKS IN VANES AND COMPRESSOR BLADES

Major Field: Mechanical Engineering

Biographical:

Personal Data: The writer was born in Groves, Texas, July 13, 1938, the son of Theodore and Mildred Dumesnil.

Education: He attended Port Neches-Groves High School, Port Neches, Texas, and was graduated May, 1957. In September, 1957, he entered Lamar State College of Technology, Beaumont, Texas, and in May, 1961, received the Bachelor of Science Degree in Mechanical Engineering. He entered the Graduate School of Oklahoma State University in September, 1961, and completed the requirements for the Master of Science Degree in August, 1962.

Experience: The writer worked for J. Imhoff and Sons, Port Arthur, Texas, for three summers while in high school and first two years of college. The summers of the remaining two years of college he worked for Straus-Frank Company, Beaumont, Texas. The summer between college graduation and entering graduate school the writer worked for Mobil Chemical Company, Beaumont, Texas. While attending Oklahoma State University he served as a research graduate assistant for three semesters.

Professional Organizations: The writer is a member of Pi Tau Sigma, The American Society of Mechanical Engineers, and The Texas Society of Professional Engineers (E.I.T.).