A THEORETICAL AND EXPERIMENTAL INVESTIGATION OF A LIQUID-TYPE TURBULENCE AMPLIFIER

By

RONALD FRANCIS OSBORN

Bachelor of Science

Oklahoma State University

1964

Submitted to the Faculty of the Graduate School of
the Oklahoma State University
in partial fulfillment of the requirements
for the degree of
MASTER OF SCIENCE
May, 1965

OKLAHOMA
STATE UNIVERSITY
LIBRARY

FEB 14 1968

A THEORETICAL AND EXPERIMENTAL INVESTIGATION

OF A LIQUID-TYPE TURBULENCE AMPLIFIER

Thesis Approved:

E. P. Fitch
Thesis Adviser

K. N. Reid, Jr.

Dean of the Graduate School

662952

PREFACE

This study is a direct outgrowth of a larger research project being conducted at the Fluid Power Controls Laboratory at Oklahoma State University under the sponsorship of the Ford Tractor Division of the Ford Motor Company. The investigation of the turbulence amplifier resulted as a part of a search for a reliable, inexpensive and efficient device for use in control systems requiring logic and using a liquid as the operating medium. My gratitude is extended to Ford for making this study possible.

Indebtedness is acknowledged to Dr. E. C. Fitch, Jr. whose guidance and support has contributed much to the success of my studies. Special thanks goes to Mr. Dean M. DeMoss whose able assistance and counseling have proved invaluable during the course of this study and throughout the Master of Science program.

I wish to express deep appreciation to my wife Kathleen for her support and encouragement throughout my graduate study and for her assistance in the preparation of the final copy of this paper.

TABLE OF CONTENTS

Chapter		Page
I.	INTRODUCTION	1
II.	THEORY OF OPERATION OF A TURBULENCE AMPLIFIER	4
III.	OBJECTIVES OF THE STUDY	12
IV.	PREVIOUS INVESTIGATIONS	14
V.	THEORETICAL CONSIDERATIONS IN THE DESIGN OF A LIQUID-TYPE TURBULENCE AMPLIFIER	19
	Treatment of the Supply Jet	19
	Operating Characteristics	30
VI.	EXPERIMENTAL CONSIDERATIONS	33
	Determination of Receiver Pressure Ratio	33
	Determination of Operating Characteristics	38
	Experimental Procedure	48
VII.	RESULTS AND CONCLUSIONS	53
VIII.	RECOMMENDATIONS FOR FUTURE INVESTIGATIONS	58
SELECTED BIBLIOGRAPHY		61
APPENDIX A - MAXIMUM LENGTH OF A LAMINAR JET		64
APPENDIX B - DERIVATION OF EFFECTIVE ORIGIN OF JET		67

LIST OF FIGURES

Figure		Page
1.	Supply-Receiver Arrangement	5
2.	Supply-Receiver Pressure Relationship	5
3.	Turbulence Amplifier Arrangement	6
4.	Single Input NOT Element Symbol	8
5.	Multiple Input NOR Element Symbol	8
6.	AND Function Developed with NOR Elements	9
7.	OR Function Developed with NOR Elements	9
8.	MEMORY Function Developed with NOR Elements	10
9.	Input-Output Characteristic Curves for Pneumatic Turbulence Amplifier	18
10.	Typical Input-Output Curve of TA	35
11.	Receiver Pressure Ratio Curves	37
12.	Receiver Pressure Ratio Curves	37
13.	Receiver Pressure Ratio Curves	38
14.	Input-Output Curves to Determine x_c	40
15.	Input-Output Curve	44
16.	Receiver Pressure Flow Characteristics	45
17.	Schematic Diagram of Test Stand	49
18.	Turbulence Amplifier Model Details	50
19.	Supply Nozzle Details	51
20.	Turbulence Amplifier Test Model	52
21.	Exploded View of TA Test Model	52

Figure Page

22. Supply Reynolds Number vs. Receiver Pressure 65

23. Non-Dimensional Curve Showing Length of Laminar Jet 66

24. Location of Effective Origin of Jet 67

NOMENCLATURE

A	-	Area
d	-	Diameter
J	-	Momentum flux
J_{tot}	-	Total momentum flux
P	-	Pressure
Q	-	Flowrate
r	-	Radius
Re	-	Reynolds Number $= \frac{\bar{u}d}{\nu}$
t	-	Time
u	-	x-component of velocity
v	-	y-component of velocity
x	-	Coordinate coinciding with jet axis of symmetry
y	-	Radial coordinate perpendicular to jet axis
ϵ_o	-	Virtual kinematic viscosity
μ	-	Absolute viscosity
ν	-	Kinematic viscosity
ω	-	φ-component of velocity
φ	-	Angular coordinate about x-axis
ρ	-	Density

Subscripts

c	-	Denotes conditions of the control nozzle or flow
L	-	Denotes conditions when supply jet is laminar
r	-	Denotes conditions of the receiver nozzle or flow
s	-	Denotes conditions of the supply nozzle or flow
T	-	Denotes conditions when supply jet is turbulent

CHAPTER I

INTRODUCTION

Activity in the field of fluid control devices without moving parts has grown from its inception in 1959 to an effort involving several million dollars annually. Interest in this area stems from the promise of low cost; high reliability, especially in radiation, high temperature, and shock and vibration environments; faster speeds of response than equivalent mechanical, electromechanical, and conventional fluid components; and in many systems better compatibility with other components. The types of no-moving-parts "fluid amplifiers" thus far developed are many and varied. However, essentially all of them possess one basic characteristic: A relatively low energy input flow controls a relatively high energy output flow. The functions performed by these fluid amplifier devices are varied also. They include: Proportional amplifiers, bistable relays, logic elements such as AND, OR, and NOR gates and shift registors, oscillators, inertial sensors, and fluid diodes. Applications are envisioned or actually operating in the fields of process and industrial control, data processing and handling systems, land, water, air, and space vehicle engine controls, medical equipment and construction and military machinery (4)[1].

---

[1]Numbers in parentheses refer to corresponding numbered references in Selected Bibliography.

Most of the current work in the field of fluid amplifiers is focused on low-power pneumatic devices for use in pneumatic systems. There is surprisingly little work being done in developing fluid amplifiers of any sort that will use a liquid as the operating medium. In designing a digital control system for high-power hydraulic machinery, it would be especially desirable to have fluid amplifiers that would use hydraulic fluid instead of gas as the working medium. In a recent research study conducted by the Fluid Power Controls Laboratory at Oklahoma State University, J. A. Caywood (5) has shown that it is feasible that liquid type fluid amplifiers may be used for this purpose.

However, as Caywood pointed out, the difficulties encountered in building a digital control system using currently available fluid amplifiers in a liquid system are too great to make them practical. Therefore, the need has developed for a fluid amplifier that will use a liquid as the operating medium, demonstrate all the desirable characteristics mentioned above, and prove to be easily interconnected in a complex control system.

The so-called "Turbulence Amplifier" developed by Raymond N. Auger (2,3) exhibits most of these characteristics except that it is for use in pneumatic systems only. Since the TA (Turbulence Amplifier) differs from the bistable fluid amplifier in its basic concept of operation, it offers a new approach in designing a logic element for use in liquid digital control systems. The Fluid Power Control Laboratory at Oklahoma State University is interested in the feasibility of designing a TA for use in liquid systems that will retain all the desirable characteristics of the TA used in pneumatic systems.

The purpose of this study was to determine the feasibility of developing a TA that could be used to build digital control systems for high-power hydraulic machinery and that would use the working fluid of the system as the operating medium of the amplifier. The objectives were to make a thorough study of the fundamentals of operation of the TA and to design a prototype TA model that could be used to determine the optimum design of a working model TA. Since the operation of a TA is based on certain flow phenomena of laminar and turbulent submerged jets, a portion of this study was devoted to the experimental determination of important characteristics of submerged jets that have not been described analytically.

The success of this study depended partially on being able to determine a satisfactory criteria on which to base the test of workability of a TA. That is, under what conditions is the model said to be performing properly and what conditions cause its performance to be unsatisfactory. Also important in the attainment of a successful investigation was the establishment of sufficient design specifications to permit the design of a TA with a minimum amount of experimental correlation.

CHAPTER II

THEORY OF OPERATION OF A TURBULENCE AMPLIFIER

Under proper conditions, a jet issuing from an orifice into a body of stationary fluid will be laminar. The jet will remain laminar for some distance away from the orifice. It then becomes turbulent when small disturbances in the stream from the orifice grow large enough to upset the laminar stream. The distance the jet will remain laminar depends on many factors such as orifice diameter, jet velocity, and fluid density and viscosity. The shape and surface condition of the inside of the orifice producing the jet also have a great influence on this distance. The transition of a jet from laminar to turbulent flow is a very complicated phenomenon and difficult to describe analytically. To date, the author has been unable to find any published literature accurately predicting the distance a submerged jet will remain laminar. Hence for the present study, this determination had to be made experimentally.

In the Turbulence Amplifier, the flow through the supply tube is adjusted so that the projected stream is laminar as shown in Figure 1. A receiver tube of approximately the same diameter as the supply tube is placed in the laminar portion of the stream so as to capture most of the momentum of the jet. As the supply pressure is increased, the pressure in the receiver tube will be observed to increase also. However, the distance the projected stream will remain laminar goes down as the supply pressure goes up. When the supply pressure is high

enough to cause turbulence at the inlet to the receiver, the peak output pressure in the receiver has been obtained. Further increasing the supply pressure will cause the cone of turbulence to move closer to the supply tube resulting in a decrease in pressure observed in the receiver. A still greater increase in the supply pressure after total turbulence is attained will cause a proportional increase in receiver pressure once again (8). This supply-receiver pressure relationship is shown in Fig. 2.

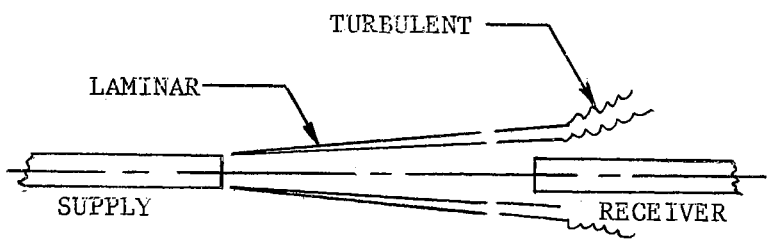

Fig. 1. Supply-Receiver Arrangement

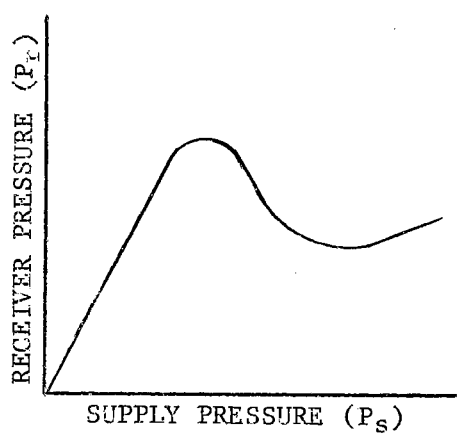

Fig. 2. Supply-Receiver Pressure Relationship

In the TA, the supply flow and the position of the receiver tube are adjusted so that the cone of turbulence occurs just beyond the receiver tube inlet. To complete the TA arrangement, a control tube is placed so that the jet issuing from it will intersect the laminar jet as shown in Fig. 3. When the control jet is interjected into the laminar supply jet, the latter becomes turbulent and the receiver pressure is hence lowered. The control flow need be only a small fraction of the supply flow since its only function is to contribute a small amount of energy to the already-present instability mechanism inherent in the projected stream.

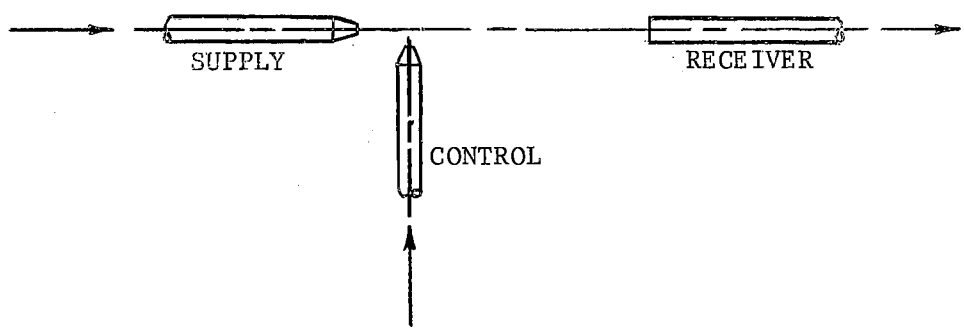

Fig. 3. Turbulence Amplifier Arrangement

For operation of the TA as a control element, the flow or pressure in the control tube is defined as the input and the flow or pressure in the receiver tube is called the output. In operation the TA has basically two states. In the first state there is insufficient flow in the control or input tube to upset the laminar supply jet and the pressure in the receiver or output tube is relatively high. In the second state, the input flow is sufficient to upset the laminar stream and cause the output to drop to a relatively low value. These two unique states are utilized to perform the logic function of the amplifier.

In digital hydraulic control systems, the input and the output signals are considered to have only two values. When the pressure or flow in a signal line is at its high value, the signal is considered "on." Conversely, when the signal is low, it is considered "off" (7). Thus in the TA when the input is high enough to upset the laminar stream, it is defined as being "on"; when the input is low enough to leave the supply stream undisturbed, it is defined as being "off." Likewise, the output is defined as being "on" when it is at its high value and "off" when it is at its low value.

With these definitions the logic function performed by the TA may be described as follows: The output will be on when the input is off and it will be off when the input is on. The TA thus performs the NOT function which is given the shorthand notation shown below,

$$\text{OUTPUT} = \overline{\text{INPUT}}$$

and is read "output equals not input." With more than one input, the TA becomes a NOR element, i.e. the output will be off if any or all of the inputs are on. According to Fitch, et al. (7), any logic function may be developed utilizing only NOR elements. Thus a complete digital control system may be developed using only turbulence amplifiers.

In order to investigate how various logic functions such as AND, OR, and MEMORY may be developed using the TA, a shorthand symbol for the TA will be used. Shown in Fig. 4 is the single input TA symbol. Note that the supply line has been omitted from the symbol since it is understood to be common to all TA's. Fig. 5 shows the multiple input TA symbol, hence a NOR logic element. The arrowheads indicate

the normal direction of flow of the pressurized fluid. Flow in the opposite direction occurs only under tanked or vented conditions.

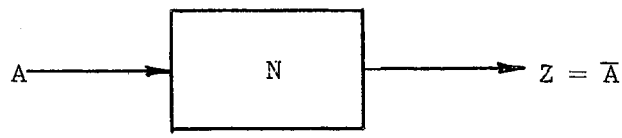

Fig. 4. Single Input NOT Element Symbol

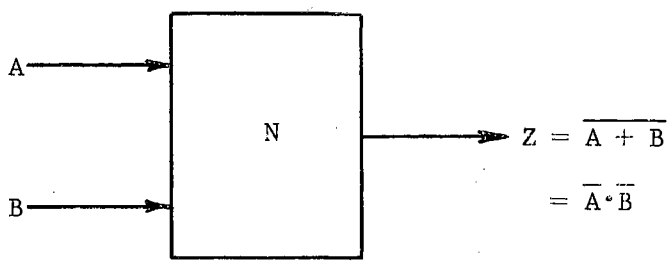

Fig. 5. Multiple Input NOR Element Symbol

The AND logic function requires that all of the inputs to an AND logic unit be present for an output to occur. Fig. 6 indicates how NOR elements may be used to produce an AND. Note that by placing additional NOR elements in parallel with those on the left in Fig. 6, the number of literals in the AND statement is easily increased. The only limiting factor as to the number of literals that may be added is the number of control or input ports that may be placed on the NOR element on the right.

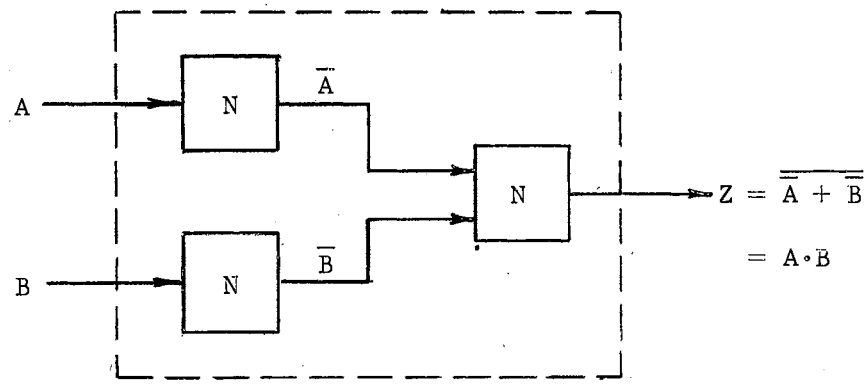

Fig. 6. AND Function Developed with NOR Elements

The development of the inclusive OR logic function is shown in Fig. 7. The OR function requires that an output occur when any or all of the inputs are present.

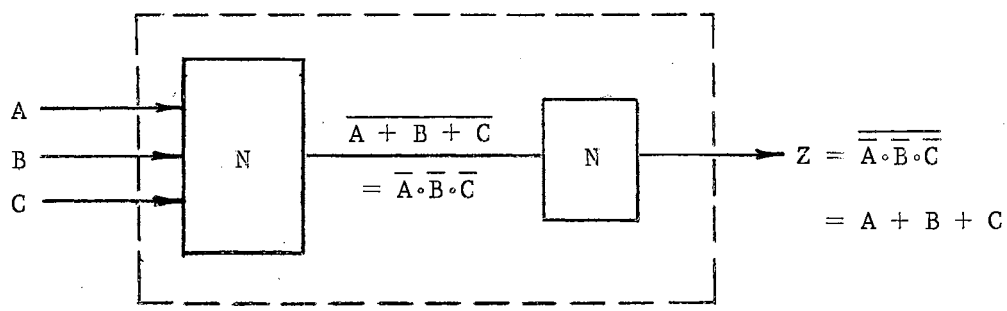

Fig. 7. OR Function Developed with NOR Elements

The MEMORY function in electronic and modern fluid systems goes under the name of the circuit used to create it, namely the flip-flop, abbreviated FF. Any mechanism capable of being pulsed to two or more states or levels of activity and retaining those states after the removal of the driving signal can be considered a form of memory device. The basic equation describing the set-reset MEMORY

function is

$$Y = S + y\overline{R}$$

where S is the "set" signal and R is the "reset" signal (7). The Flip-flop circuit using turbulence amplifiers is shown in Fig. 8. The output of one NOR element is used to keep the other in an "off" state, and as the connections between the NOR's are identical, which one is "on" and which is "off" is a matter of history--that is, which one was last turned "off" by an input pulse.

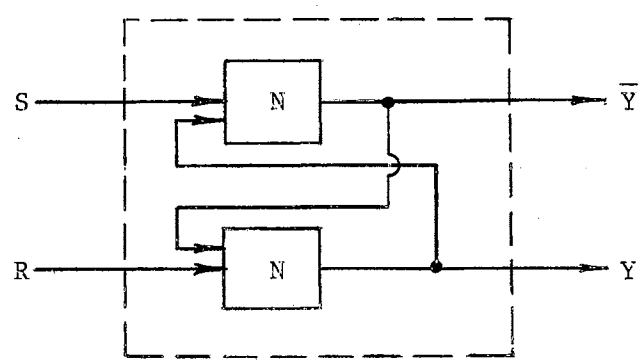

$$Y = S + y\overline{R}$$

Fig. 8. MEMORY Function Developed with NOR Elements

At this point the reason for the previous statement concerning the use of the TA as the elementary building block in a digital system should be evident. That is, all of the above logic functions have been developed using the same type TA; and, combinations of these functions may be used in developing any digital type system.

One of the major advantages of the TA will become apparent in Chapter VI. That is, the minimum input signal to which an amplifier will respond is significantly greater than the minimum output signal observed when the amplifier is in the turbulent state. This fact

enables the output of one TA to be directly connected to the input of another, without biasing of any kind. Few, if any, logic circuit components are so easily interconnected.

The isolation of the inputs of the TA is another major advantage. Variations in the pressures in the control jets have no effect on other control jets of the same TA. Also, variations in the pressure at the receiver due to types of load have no effect whatsoever on either the basic operation of the amplifier or on the input pressures. With the inputs thus isolated, there is no elaborate interconnection procedure or impedance matching necessary between elements in a system using several amplifiers.

Before further discussion of the TA and its characteristics, it is appropriate that some of the terms used to describe the TA be defined. The pressure gain of the amplifier is defined as the change in output pressure, with a blocked receiver, divided by the corresponding change in input pressure. The flow gain is defined as the change in output flow under no-load conditions, divided by the corresponding change in input flow. The reader should refer to the front section of this paper for a list of the symbology to be used throughout the remainder of the text.

CHAPTER III

OBJECTIVES OF THE STUDY

The need for an investigation in the area of this study came about as a direct result of previous research work conducted by the Fluid Power Controls Laboratory at Oklahoma State University. Research by laboratory personnel in the area of digital hydraulic systems began with the development of an analytical scheme to design this type network. Using this scheme, actual working digital control systems have been developed using stock hydraulic components. During the development of these systems, the need was realized for a replacement for the bulky, expensive, and sometimes unreliable stock components. With this need in mind, Mr. Caywood (5) undertook a study to determine the feasibility of using fluid amplifiers as the needed replacement component. His study indicated that the use of fluid amplifiers could very well be a major step forward in the field of digital hydraulic control systems; however, the presently available fluid amplifiers left much to be desired in the way of efficiency and interconnectability.

Thus the turbulence amplifier was looked upon as a possible answer to the problem of developing a device that would combine all the desirable characteristics of the bistable fluid amplifier with ease of interconnection and low power consumption. In an effort to answer this question, this study was initiated with the following objectives in mind:

1. Determine the conditions for a laminar and a turbulent supply jet since the entire concept of operation of the TA depended on being able to develop and maintain a laminar jet for a considerable distance downstream.
2. Derive an analytical expression for the supply jet in order to predict design parameters for the proper design of a turbulence amplifier.
3. Design and construct a prototype model TA to be used in determining the authenticity of the analytical expressions and in determining the feasibility of utilizing the TA in digital hydraulic systems.
4. Make suggestions and recommendations concerning the use of TA's in hydraulic systems and the future investigation of the fields of fluid and turbulence amplifiers.

CHAPTER IV

PREVIOUS INVESTIGATIONS

The laminar submerged jet is perhaps one of the best analytically described phenomenon in the field of fluid flow. However, there is still a great deal that is unknown about the transition of a jet from the laminar to the turbulent state. This became apparent to the author in his quest for an answer to the first objective.

It was essential to the operation of the TA that the supply jet be maintained in a laminar state at least until it had passed beyond the inlet to the receiver tube. The question was then, "under what conditions could the supply jet be expected to remain laminar for the prescribed distance?" In 1937 Andrade and Tsien (1) performed a series of tests on laminar submerged jets in order to determine an accurate velocity profile of the flow. Their tests included flows with Reynolds numbers ranging from 110 to 600 with measurements taken up to 3.3 cm. from a 0.091 cm. diameter nozzle. In these tests the Reynolds number was taken as $Re = \frac{\bar{u}d}{\nu}$ where:

$\bar{u}$ = continuity averaged velocity = $\frac{1}{A}\int u dA$

d = diameter of the nozzle

ν = kinematic viscosity.

Although the authors did not state at what distance the jet became turbulent, their study would indicate that for Reynolds numbers up to 600 one could expect to find a laminar jet for at least 36 diameters downstream from the nozzle.

In 1962 A. J. Reynolds (13) reported on a study of the mode of breakdown of a laminar jet as a function of the Reynolds number and the distance from the supply nozzle. Mr. Reynolds states that the length of the steady jet is reduced to a "few inches" from the 0.0126 inch diameter supply nozzle when the Reynolds number reaches approximately 300. He has offered little, if any, concrete information, but he does indicate that for Re = 300 it could be anticipated that the jet would remain laminar for over 100 diameters downstream.

Although these studies gave some vague indication of the condition of the supply jet for Reynolds numbers below 600, more information was needed for jets whose Reynolds numbers were in the range 600 to 2000. In a report prepared by U. Domm, et al. (6), the authors presented a photograph of a submerged circular water jet whose Reynolds number was 10,000. This jet was observed to be in a laminar state of motion for at least two diameters downstream from the orifice producing it. With this evidence it was concluded that although the distance a jet could be expected to remain laminar was uncertain, it would at least be possible to obtain a laminar jet in the range of Reynolds numbers this study was later to encompass, i.e. approximately 500 to 2000.

Having thus established the fact that the supply jet could be maintained in a laminar state in the range of interest, the groundwork was laid for deriving an analytical description of the jet. Two articles by R. N. Auger (2,3) on the pneumatic turbulence amplifier were consulted in search of previous theoretical works. However, neither of these articles offered any theoretical justification for the operation of the TA nor did they present any useful design

criteria. Likewise, neither does the article presented by H. and H. Machine Co. (8) offer any analytical description of the TA. The article does, however, discuss several points of interest about the TA that will be brought out later. From the information available thus far, it would appear that there has been very little theoretical treatment of the TA or that any analytical studies on it are as yet unpublished.

In an effort to derive an expression for the supply jet and the receiver pressure resulting from the jet under both laminar and turbulent conditions, the author chose to follow the works of H. Schlichting (14). Schlichting presented a derivation of the velocity profiles of both a laminar and a turbulent circular submerged jet under certain simplifying assumptions. These velocity profiles will be used in Chapter V to derive an expression for the ratio of the receiver pressure when the supply jet is laminar to that when the jet is turbulent. In deriving the laminar jet velocity profile, Schlichting assumed steady, incompressible, laminar flow in which no body or field forces were present. He also assumed that the velocity component in the angular direction (rotation about the jet axis of symmetry) was zero. Schlichting supported the argument that the constant pressure of the surrounding fluid was impressed on the jet, making the pressure within the jet essentially constant. These assumptions were supported by other well-known authors in the field of fluid dynamics as well, e.g. S. J. Pai (10).

The most restrictive of Schlichting's assumptions was that the jet issued from a point aperture, giving, as it does, an infinite velocity. In their study, Andrade and Tsien reported excellent

agreement between their experimental findings and Schlichting's theoretical predictions except in the immediate neighborhood of the orifice. However, it was necessary for them to account for the fact that their jet issued from an orifice of finite size. They did this by determining the effective origin of the point-source jet and including this in Schlichting's equations. They determined experimentally that the effective origin of the jet could be given by

$$\frac{x_o}{d_s} = 0.040 \text{ Re}$$

where x_o was the distance within the supply nozzle to the effective origin. Appendix B presents the derivation of an equation for x_o which corresponds quite well with the above empirical value. During the conduct of the present study it was found necessary to include the effects of the effective origin of the jet in Schlichting's equations.

In his derivation of the turbulent jet velocity profile, Schlichting made essentially the same basic assumptions as in the case of the laminar jet, the only differences being a consideration of turbulent flow rather than laminar and the inclusion of the "virtual" or "apparent" kinematic viscosity of turbulent flow. In this context Schlichting quotes H. Reichardt (11) as having performed velocity measurements on a turbulent jet and having shown excellent agreement with his own theoretical results.

Although the article by H. and H. Machine Co. mentioned previously did not offer any analytical description of the TA, it did discuss some points that should be considered during the experimental phase of this investigation. One of the most important of

these points is the steady-state input-output characteristic of the TA. Shown in Fig. 9 are typical input-output curves of a pneumatic TA for various supply pressures, according to H. and H. Machine Co. (8). A similar set of curves for the liquid TA will be important in selecting the optimum configuration for efficient operation.

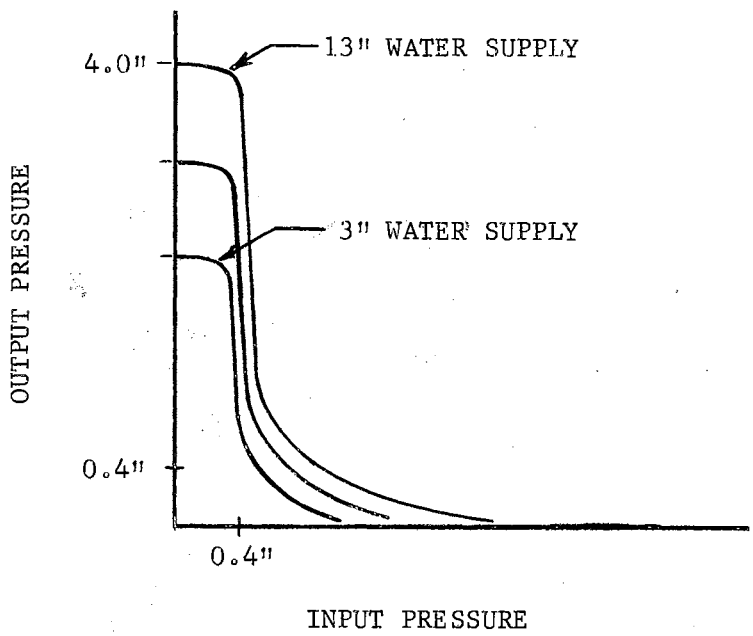

Fig. 9. Input-Output Characteristic Curves for Pneumatic Turbulence Amplifier (8)

In summary there has been little or no information published on the design characteristics of the turbulence amplifier. What little information is available pertains strictly to pneumatic devices with no indication whatsoever as to what the effects might be if a liquid were used as the operation medium. However, accurate analytical descriptions of the supply jets are available and will be used as a basis for investigation of a liquid type TA.

CHAPTER V

THEORETICAL CONSIDERATIONS IN THE DESIGN OF A LIQUID TYPE TURBULENCE AMPLIFIER

In order to efficiently design a turbulence amplifier, a complete analytical description of the device should first be available. Any areas not accurately described analytically must first be investigated experimentally to establish pertinent design criteria. This chapter discusses a theoretical description of the TA and an experimental determination of points not covered in this description. It is pointed out that the equations developed will be useful in determining a starting point in the design of a TA and as a guide in subsequent experimental investigations. The first section of the chapter covers in detail the derivation of equations predicting the receiver pressure for various states of the supply jet. The following section then discusses some of the operating characteristics of the TA that must be determined experimentally.

Treatment of the Supply Jet

Although the submerged jet is described quite well analytically, the cause and mechanism of transition from the laminar to the turbulent state still eludes precise analytical description. In view of the fact that this state of transition is so ill-defined, the following assumption was made to permit theoretical treatment of the supply jet.

It was assumed that the only effect the control jet had on the supply jet was to cause it to change from the laminar to the turbulent state, that the control jet did not deflect the supply jet, and that it did not add any momentum in the direction parallel to the supply jet axis. Thus, the supply jet could be considered in two separate cases: one, the completely laminar state and the other, the completely turbulent state.

The development of analytical expressions for the supply jet must, therefore, include two separate cases; however, the procedure will be basically the same in both cases. That is:

1. Determine the velocity distribution within the jet as a function of x and y.
2. From the velocity distribution determine the distribution of momentum within the jet.
3. Determine the amount of momentum captured by the receiver tube, i.e., the momentum possessed by the fluid entering the receiver tube.

With an expression for the momentum captured for both cases, a relation may be formed giving the ratio of the pressure in the receiver tube when the jet is laminar to that when it is turbulent.

Consider first the case of the laminar jet. Schlichting (14) presented a derivation of the velocity profile that will be followed here. The continuity equation and the Navier-Stokes equation for the x-direction in cylindrical coordinates are as follows:

$$\frac{\partial v}{\partial y} + \frac{v}{y} + \frac{1}{y}\frac{\partial \omega}{\partial \varphi} + \frac{\partial u}{\partial x} = 0 \qquad (5\text{-}1)$$

$$\rho\left(\frac{\partial u}{\partial t} + v\,\frac{\partial u}{\partial y} + \frac{\omega}{y}\,\frac{\partial u}{\partial \varphi} + \frac{\partial u}{\partial x}\right)$$

$$= F_x - \frac{\partial p}{\partial x} + \mu\left(\frac{\partial^2 u}{\partial y^2} + \frac{1}{y}\,\frac{\partial u}{\partial y} + \frac{1}{y^2}\,\frac{\partial^2 u}{\partial \varphi^2} + \frac{\partial^2 u}{\partial x^2}\right) \qquad (5\text{-}2)$$

Using assumptions stated in Chapter VI and neglecting higher order terms, equations 5-1 and 5-2 may be written as

$$\frac{\partial u}{\partial x} + \frac{\partial v}{\partial y} + \frac{v}{y} = 0 \qquad (5\text{-}3)$$

$$u\,\frac{\partial u}{\partial x} + v\,\frac{\partial u}{\partial y} = \frac{\nu}{y}\left[\frac{\partial}{\partial y}\left(y\,\frac{\partial u}{\partial y}\right)\right] \qquad (5\text{-}4)$$

and the boundary conditions are

$$y = 0 : \quad v = 0 , \quad \frac{\partial u}{\partial y} = 0 ;$$

$$y = \infty : \quad u = 0 .$$

Since the pressure in the jet is constant, the total momentum flux in the jet must remain constant and independent of x, hence

$$J_{tot} = 2\pi\rho\int_0^\infty u^2 y\,dy = \text{constant}. \qquad (5\text{-}5)$$

Since the problem as a whole possesses no characteristic linear dimension, the velocity profiles are most probably similar, and it may therefore, be assumed that the velocity u is a function of y/b, where b is the width of the jet suitably defined. The assumption that the profiles are similar is not valid in the region up to 10-12 supply diameters downstream, for in this region the effects of the uniform velocity profile at the nozzle exit are still felt. Some authors call this the zone of flow establishment (9,10). However, since during the course of this study the receiver was never less

than 16 diameters from the supply nozzle, the assumption was valid as stated. It may also be assumed that b is proportional to x^n. Accordingly the stream function can be written in the form

$$\Psi \propto x^p F(\eta) \ , \qquad \text{with} \qquad \eta = \frac{y}{x^n}$$

The two unknown exponents p and n can be determined from the following conditions:

1. The flux of momentum in the x-direction is independent of x, according to equation 5-5.
2. The acceleration terms and the friction term in equation 5-4 are of the same order of magnitude.

Condition #1 will first be utilized in the following manner to obtain equation 5-6.

$$\Psi \propto x^p F\left(\frac{y}{x^n}\right)$$

$$u = \frac{1}{y}\frac{\partial \Psi}{\partial y} \propto \frac{x^{p-n}}{y} F'$$

$$J_{tot} \propto 2\pi\rho \int_0^\infty \frac{x^{2(p-n)}}{y}(F')^2 dy = \text{constant} = C_1$$

$$\propto 2\pi\rho x^{2(p-n)} \ C_2 = C_1$$

$$x^{2(p-n)} = C_3$$

$$p - n = 0 \tag{5-6}$$

By obtaining expressions for u and v and substituting them into the appropriate terms in equation 5-4, condition #2 is utilized with the following equation resulting.

$$x^{2p-2n-1}\left[(p-2n)(F')^2 - pFF'' + \frac{pFF'}{\eta}\right] = x^{p-2n}\left[\nu F''' \eta + \frac{\nu F'}{\eta} - \nu F''\right]$$

Hence

$$2p - 2n - 1 = p - 2n \tag{5-7}$$

combined with equation 5-6 gives $p = n = 1$. Consequently, we may now put

$$\Psi = \nu x F(\eta) \qquad \text{and} \qquad \eta = \frac{y}{x}$$

from which it follows that the velocity components are

$$u = \frac{1}{y}\frac{\partial\Psi}{\partial y} = \frac{\nu}{x}\frac{F'}{\eta} \quad ; \tag{5-8}$$

$$v = \frac{1}{y}\frac{\partial\Psi}{\partial x} = \frac{\nu}{x}\left(F' - \frac{F}{\eta}\right) . \tag{5-9}$$

Substituting equations 5-8 and 5-9 into equation 5-4 and performing the differentiation where indicated results in

$$\frac{FF'}{\eta^2} - \frac{(F')^2}{\eta} - \frac{FF''}{\eta} = F''' - \frac{F''}{\eta} + \frac{F'}{\eta^2} ,$$

which is of the form

$$\frac{d}{d\eta}\left(-\frac{FF'}{\eta}\right) = \frac{d}{d\eta}\left(F'' - \frac{F'}{\eta}\right) . \tag{5-10}$$

The boundary conditions are now

$$\eta = 0 : \quad F = 0 , \quad F' = 0 .$$

Integration of equation 5-10 gives

$$FF' = F' - \eta F'' + C_1 .$$

The constant of integration C_1 may be evaluated from the boundary

conditions and found to equal zero, giving the following equation.

$$FF' = F' - \eta F'' \tag{5-11}$$

The solution of equation 5-11 will give two arbitrary constants. If a power series in η is assumed for F, the condition $F(0) = 0$ will cause the constant term (coefficient of η^{o}) to be zero. Hence one of the two constants is determined to be zero. The other constant, denoted as γ, can be determined as follows. If $F(\eta)$ is a solution of equation 5-11, then $F(\gamma\eta) = F(\zeta)$ is also a solution. A particular solution of the equation

$$F \frac{dF}{d\zeta} = \frac{dF}{d\zeta} - \zeta \frac{d^2F}{d\zeta^2}$$

which satisfies the boundary conditions $\zeta = 0$: $F = 0$, $F' = 0$, is given by

$$F = \frac{\zeta^2}{1 + \frac{1}{4}\zeta^2} \tag{5-12}$$

Substitution of equation 5-12 into equation 5-8 gives

$$u = \frac{2\nu\gamma^2}{x\left(1 + \frac{1}{4}\zeta^2\right)^2} = \frac{2\nu\gamma^2}{x\left[1 + \left(\frac{\gamma y}{2x}\right)^2\right]^2} \tag{5-13}$$

which is the desired velocity profile. The constant of integration can now be determined from the given value of momentum. Equation 5-5 is evaluated with the use of equation 5-13.

$$J_{tot} = 2\pi\rho\int_0^\infty u^2 y dy$$

$$= 2\pi\rho\int_0^\infty \frac{4\gamma^2\nu^2 y}{x^2\left[1 + \left(\frac{\gamma y}{2x}\right)^2\right]^4}\, dy$$

$$= \frac{16}{3}\,\pi\rho\nu^2\gamma^2 \tag{5-14}$$

This point marks the end of Schlichting's very valuable contribution to the theoretical treatment of the supply jet as it applies to this problem. The following extension of his work by the author must follow the same assumptions and restrictions as those placed on the development by Schlichting.

Since the total momentum flux, J_{tot} is constant in the x-direction, it may be evaluated at any convenient location. This location may be at the orifice if a suitable initial velocity distribution is assumed. Andrade and Tsien (1) reported that for Re $>$ 360 the velocity distribution at the orifice is approximately uniform. Thus equation 5-5 may easily be evaluated at the orifice by assuming a uniform velocity distribution at that point and integrating between the limits of 0 and r_s. The latter limit may be used since at the orifice for $y > r_s$ the axial momentum flux is zero.

$$J_{tot} = 2\pi\rho\int_0^{r_s} u^2 y dy$$

$$u = u_{max} = \overline{u}$$

$$J_{tot} = 2\pi\rho(\overline{u})^2\int_0^{r_s} y dy$$

$$= \pi\rho(\overline{u})^2 r_s^{\,2} \tag{5-15}$$

Equating equations 5-14 and 5-15 gives

$$\frac{16}{3}\,\pi\rho\nu^2\gamma^2 = \pi\rho(\overline{u})^2 r_s^{\,2}$$

$$\gamma^2 = 3\left(\frac{Re}{8}\right)^2 \tag{5-16}$$

with which the constant of integration, γ , may be determined.

Now the third step of the analysis may be accomplished, that is, a determination of the momentum captured in the receiver tube. This may be evaluated with the use of equations 5-5 and 5-13 whereby equation 5-13 is taken at the receiver entrance with $x = x_r$ and equation 5-5 is evaluated between the limits 0 and r_r.

$$J_{r_L} = 2\pi\rho\int_0^{r_r} \frac{\nu^2 4\gamma^4 y}{x_r^2\left[1 + \left(\frac{\gamma y}{2x_r}\right)^2\right]^4}\, dy$$

$$= \frac{16}{3}\,\pi\rho\nu^2\gamma^2\left\{1 - \frac{1}{\left[1 + \left(\frac{\gamma r_r}{2x_r}\right)^2\right]^3}\right\}$$

$$= J_{tot}\left\{1 - \frac{1}{\left[1 + \frac{3}{4}\left(\frac{Re\ d_r}{16\ x_r}\right)^2\right]^3}\right\} \tag{5-17}$$

Equation 5-17 relates, for a laminar jet, the amount of momentum flux captured by the receiver tube with measureable system variables.

The case of the turbulent jet will now be considered. An equation similar to 5-17 must also be derived for this case. According to Schlichting (14), for a turbulent jet the kinematic viscosity ν of laminar flow may be replaced by the virtual kinematic viscosity ϵ_o of turbulent flow and the resulting differential equation will be formally identical with that for the laminar jet. It is, therefore, possible to carry over the solution for the laminar, circular jet, obtaining the following velocity profile.

$$u = \frac{\epsilon_o}{x} \frac{2\gamma^2}{\left[1 + \left(\frac{\gamma y}{2x}\right)^2\right]^2} \tag{5-18}$$

In this case the total momentum flux is given by

$$J_{tot} = \frac{16}{3} \pi\rho\gamma^2 \epsilon_o^2 \tag{5-19}$$

In the case of turbulent flow the apparent kinematic viscosity is more a property of the flow than a property of the fluid. Schlichting quotes measurements performed by H. Reichardt (11) that show that ϵ_o is governed by the following relation.

$$\frac{\epsilon_o}{\sqrt{\frac{J_{tot}}{\rho}}} = 0.0161$$

Substitution of this value of ϵ_o into equation 5-19 yields the result, $\gamma = 15.17$. The momentum captured in the receiver can be evaluated as in the laminar case with the following results.

$$J_{r_T} = 2\pi\rho \int_o^{r_r} \frac{\epsilon_o^2}{x_r^2} \frac{4\gamma^4 y}{\left[1 + \left(\frac{\gamma y}{2x_r}\right)^2\right]^4} dy$$

$$= \frac{16}{3} \pi\rho \epsilon_o^2 \gamma^2 \left\{1 - \frac{1}{\left[1 + \left(\frac{\gamma r_r}{2x_r}\right)^2\right]^3}\right\}$$

$$= J_{tot} \left\{1 - \frac{1}{\left[1 + \left(3.7925 \frac{d_r}{x_r}\right)^2\right]^3}\right\} \tag{5-20}$$

For a constant momentum flux, the pressure in the blocked receiver tube will be directly proportional to the momentum per unit area captured if the receiver meets certain restrictions as pointed out by K. N. Reid, Jr. (12). Reid has shown that the center-line velocity of the jet gives a better indication of the recovery pressure than the variable velocity profile. Therefore, for the above statement to be true, the velocity profile must be sufficiently flat so that the velocity across the mouth of the receiver is essentially the same as the center-line velocity. This may be achieved by placing the receiver sufficiently far downstream or by restricting the receiver diameter to be no larger than the supply nozzle diameter. Since both of the above restrictions were met in the experimental model used in this study, the original statement is valid. Hence if we let

P_{r_L} = Receiver pressure in the laminar case,

P_{r_T} = Receiver pressure in the turbulent case,

then $P_{r_L} \propto J_{r_L}$, $P_{r_T} \propto J_{r_T}$, and $\dfrac{P_{r_L}}{P_{r_T}} = \dfrac{J_{r_L}}{J_{r_T}}$

or

$$\frac{P_{r_L}}{P_{r_T}} = \frac{1 - \dfrac{1}{\left[1 + \frac{3}{4}\left(\frac{Re}{16}\,\frac{d_r}{x_r}\right)^2\right]^3}}{1 - \dfrac{1}{\left[1 + \left(3.7925\,\frac{d_r}{x_r}\right)^2\right]^3}} \,. \tag{5-21}$$

Equation 5-21 gives the ratio of the receiver pressure for the case of a laminar jet to that for the case of a turbulent jet. Equation 5-21 is, however, the result of an idealized argument; among other

limitations it does not include the consequences of the effective origin of the jet which has a definite influence on the supply stream. To incorporate the effective origin into equation 5-21, the term x_o, for the displacement of the effective origin, is added to x_r in equation 5-17. Since x_o will be substantially smaller for the turbulent jet, its effects may be neglected and it need not be added to equation 5-20 for the turbulent case. A detailed accounting of x_o and a justification for the last statement is given in Appendix B. With this modification, equation 5-21 is now written

$$\frac{P_{r_L}}{P_{r_T}} = \frac{1 - \dfrac{1}{\left[1 + \dfrac{3}{4}\left(\dfrac{Re}{16}\,\dfrac{d_r}{x_o + x_r}\right)^2\right]^3}}{1 - \dfrac{1}{\left[1 + \left(3.7925\,\dfrac{d_r}{x_r}\right)^2\right]^3}} . \tag{5-22}$$

This equation is a useful and important relation in designing a TA since, in general, a configuration and Reynolds number producing a high P_{r_L}/P_{r_T} ratio will give good, but perhaps not the best, operating characteristics. Equation 5-22 is useful in determining a starting point in designing a TA but since important variables such as control nozzle location and receiver flowrate are not included, minor modifications of the configuration given by this equation may have to be made. One very important point that must be remembered when using equation 5-22 is that for a given supply Reynolds number there is a maximum x_r that is allowed or for a given x_r there is a maximum Reynolds number that can be used. This maximum value is the greatest value of x_r or Re that may be attained and maintain the supply jet in a laminar state. An empirical curve showing the relation between

these maximum values as determined during the course of this investigation is given in Appendix A.

Operating Characteristics

As previously stated, equation 5-22 does not include all the factors affecting the operation of the TA. Since it was beyond the scope of this study to obtain a complete analytical description of the TA, certain characteristics had to be determined experimentally. It is even doubtful that a complete description encompassing all parameters possibly affecting the flow would be feasible without a major extension of present knowledge of fluid flow. However, with the benefit of having equation 5-22 as a guide, a minimum of experimentally determined information is required to fully describe the TA.

Just what supplemental information is required to completely describe the TA and permit the selection of the optimum configuration for design purposes? A consideration of the various system parameters and the manner in which they affect the output of the amplifier will dictate the additional information that is required. The Reynolds number of the supply jet, the receiver displacement and the receiver diameter have already been considered in equation 5-22 with respect to their effect on the receiver pressure ratio, P_{r_L}/P_{r_T}. In addition to affecting the receiver pressure ratio, the receiver diameter influences the output flowrate. This fact becomes important when considering that the output of one TA may be required to drive the input of another. The supply nozzle diameter also shows its influence in other than the receiver pressure ratio. The supply flowrate which is directly proportional to d_s must be kept

at a relatively low value in order for the TA to be economical in a complex system utilizing several of the amplifier elements. Factors not previously considered but possibly affecting the amplifier operation include the control nozzle size and location and the variation in control pressure and flowrate necessary to cause change in state of the amplifier.

Most of the desired information about the operating characteristics of the TA may be obtained from plotting experimental data on two graphs. A plot of control pressure versus blocked receiver pressure and a plot of output flowrate versus output (receiver) pressure provide the necessary information to describe the effects of the various parameters mentioned above and to determine other TA characteristics. The method by which these graphs are used to provide the desired information will be explained in detail in Chapter VI. The P_c vs. P_r curves may be used to verify the predictions of equation 5-22 and to determine the proper location, both axially and transversely, of the control nozzle. The over-all pressure gain or amplification of the TA may also be determined from this graph. The P_r vs. Q_r curves are useful in ascertaining the optimum receiver diameter in connection with the output flowrate and, used in conjunction with the P_c vs. P_r curves, allows the determination of the proper control nozzle size as well as the "fan-out ratio" of the amplifier. The fan-out ratio is defined as the number of amplifiers a single TA will drive, that is, the number of amplifiers that can be turned "off" at one time by a single amplifier in the "on" state. It is important that this fan-out ratio be at least two or greater, for a TA with a fan-out ratio of only one could not be used to form

a MEMORY element (cf. Fig. 8). Each of the amplifiers in Fig. 8 must be able to drive the downstream load and at the same time turn the other TA "off."

The proper supply nozzle diameter with respect to supply flowrate may be determined only from a study of the economics of a particular system. For example, in a control system using only a few TA's, it may not be restrictive to us a rather large d_s since the total supply flowrate may not be great enough to cause excessive power losses. However, in a system utilizing a large number of TA's, the total supply flowrate might constitute an unreasonable power loss if the same d_s were used as in the system of only a few TA's.

Thus the appropriate configuration for a properly functioning TA is not easily derived. In some cases the selection of the correct value of a variable may be the result of a compromise between two conflicting requirements, while others may be selected only after a study of the particular system for which they are intended. In any case, use of equation 5-22 as a starting point and use of the family of P_c vs. P_r and P_r vs. Q_r curves to make minor additions and refinements will permit the designer to adjudge most of these parameters in their proper perspective and make the appropriate selection.

CHAPTER VI

EXPERIMENTAL INVESTIGATIONS

The experimental phase of this study was initiated with the following objectives in mind: (1) to confirm or reject the theoretical predictions; (2) to determine the required specifications for those parameters not included in the analytical development of Chapter V; and, (3) regardless of the outcome of number (1), to make some definite recommendations as to the feasibility of using a liquid turbulence amplifier and as to areas of future investigation.

The first two sections of this chapter are intended to parallel the two sections of Chapter V. The first section compares the theoretical predictions of the first section of Chapter V with actual experimental results; the second section makes an experimental determination of those factors discussed in the second section of Chapter V. The final section of this chapter then gives a detailed accounting of the experimental procedure and apparatus used in this study.

Determination of Receiver Pressure Ratios

In most experimental work, a sometimes difficult task is the interpretation of the data. This can be an unexpected and unaccounted for source of error at times. In an effort to circumvent these problems and to present a uniform and meaningful diagnosis of the data gathered in this study, a standard method of interpretation was

devised. Although this method was devised with consistency of data explanation in mind, it should be remembered that any scheme for recording or reading experimental information must have as its ultimate goal the disclosure of the actual physical phenomena taking place.

The method used in this study is best explained by referring to Fig. 10 which shows a typical empirical P_r vs. P_c curve for the amplifier configuration shown. Note that when the control pressure is zero, the receiver pressure is at its maximum value. As P_c is gradually increased from zero, P_r remains essentially constant for a short distance and then begins to fall off rather rapidly. Upon increasing P_c further, P_r begins to decrease at a much slower rate, approaching a linear rate of descent.

The input-output curve may be divided into three distinct regions. Region one on the curve consists of the essentially constant portion in which the control flow has little or no effect on the laminar supply jet. In region two, the control flowrate has become sufficient to upset the laminar supply stream and cause it to become turbulent. Notice that the change from laminar to turbulent flow does not occur instantaneously, rather it is a continuous process even though it does take place rather rapidly. The third region of the curve depicts the receiver pressure as the control flow reaches a sufficiently high energy level to cause the supply jet to become completely turbulent. In this region the control jet has enough momentum to deflect or bend the now turbulent supply jet causing a still further decrease in the receiver pressure. The input-output curve shows that the control jet actually starts deflecting the supply jet before it becomes completely turbulent. However, in order to get a

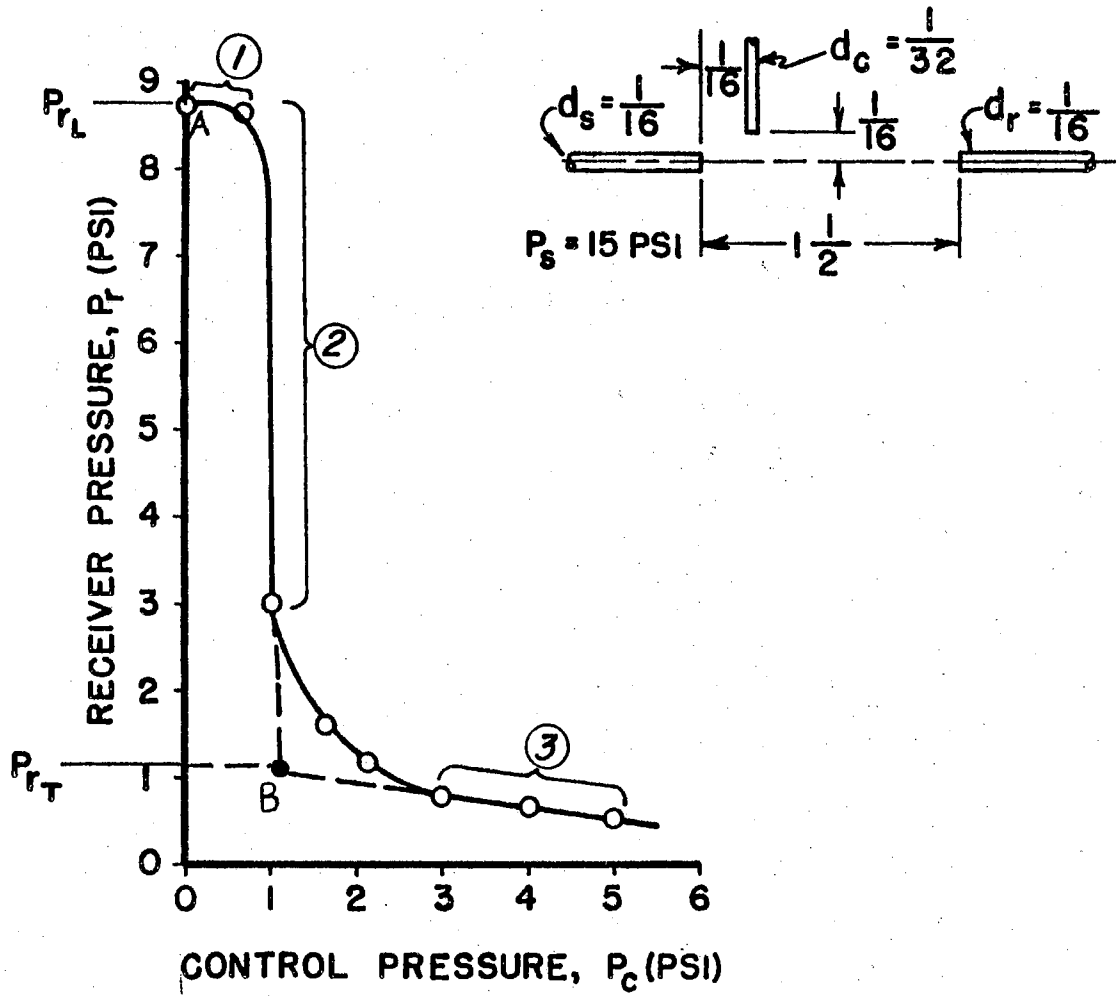

Fig. 10. Typical Input-Output Curve of TA

good representative value of P_r for the case of a completely turbulent supply jet that has not been deflected, regions two and three on the curve were approximated by straight lines; the intersection of these

lines determining this value. That is, the pressure P_{r_T} corresponding to the point B in Fig. 10 is the receiver pressure value that would be obtained if it were possible to cause the supply jet to become completely turbulent without deflecting it. The maximum pressure P_{r_L} corresponding to the point A is, of course, the receiver pressure for a completely laminar supply jet.

The two receiver pressure values, P_{r_L} and P_{r_T}, obtained as described above are the values used in computing the ratio P_{r_L}/P_{r_T} for comparison with equation 5-22. Figures 11, 12, and 13 show graphs of values of P_{r_L}/P_{r_T} versus the Reynolds number at the orifice for various d_r/x_r ratios. The solid lines are graphs of equation 5-22 while the isolated points are actual data points obtained from graphs such as that shown in Fig. 10. The values of x_c and y_c used in obtaining these graphs were selected as described in the second section of this chapter. Data points were not obtained at lower Reynolds numbers for two reasons. The first reason being that the assumption of a uniform velocity profile at the orifice restricted the Reynolds number to be at least greater than 360, and the second reason being that only at the higher Reynolds number was the fan-out ratio greater than one.

Comparison of the theoretical curves with the experimental data points in Figures 11, 12, and 13 shows that equation 5-22 does seem to predict the general trend of P_{r_L}/P_{r_T} values for those TA's tested. Thus, equation 5-22 may be employed as a useful tool in determining a suitable starting point in the design of a TA. However, as it was pointed out previously, this equation does not encompass all of the factors involved in determining the proper TA design. Thus, there

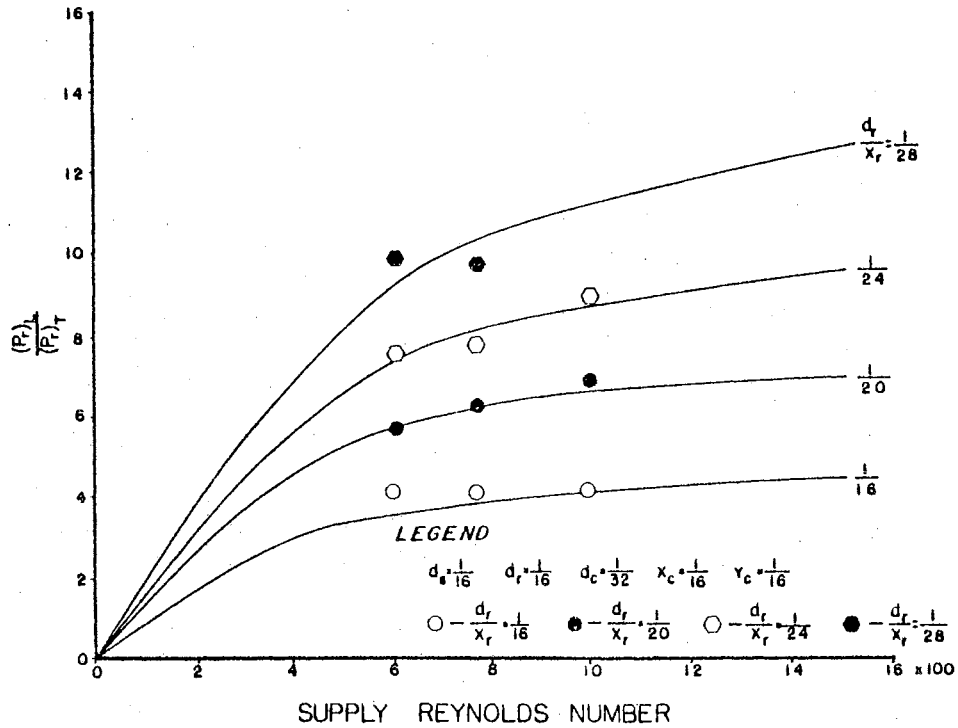

Fig. 11. Receiver Pressure Ratio Curves

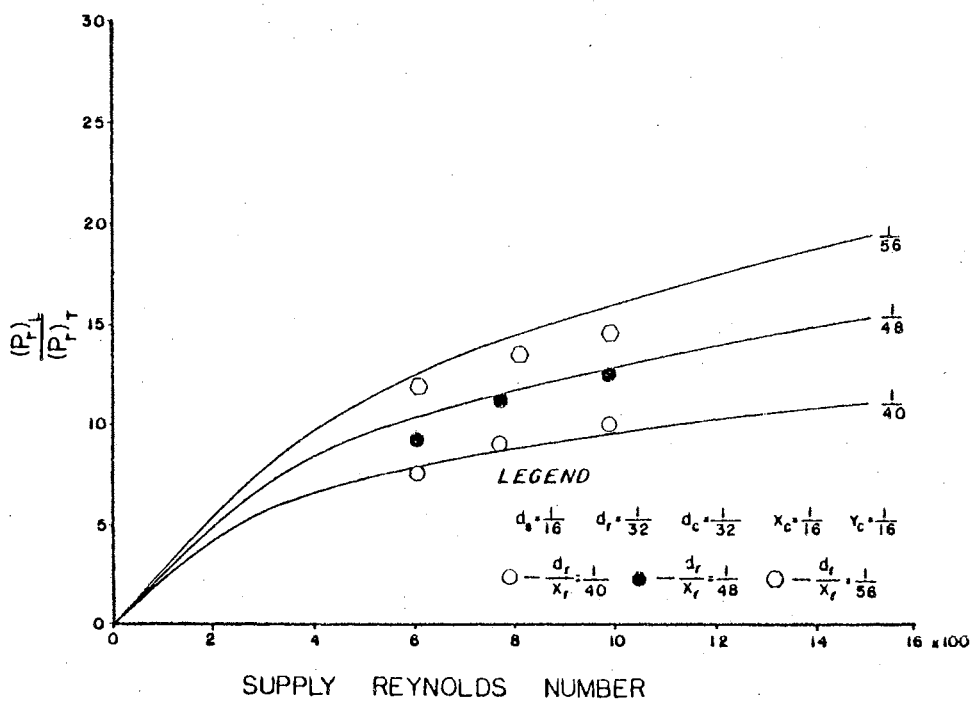

Fig. 12. Receiver Pressure Ratio Curves

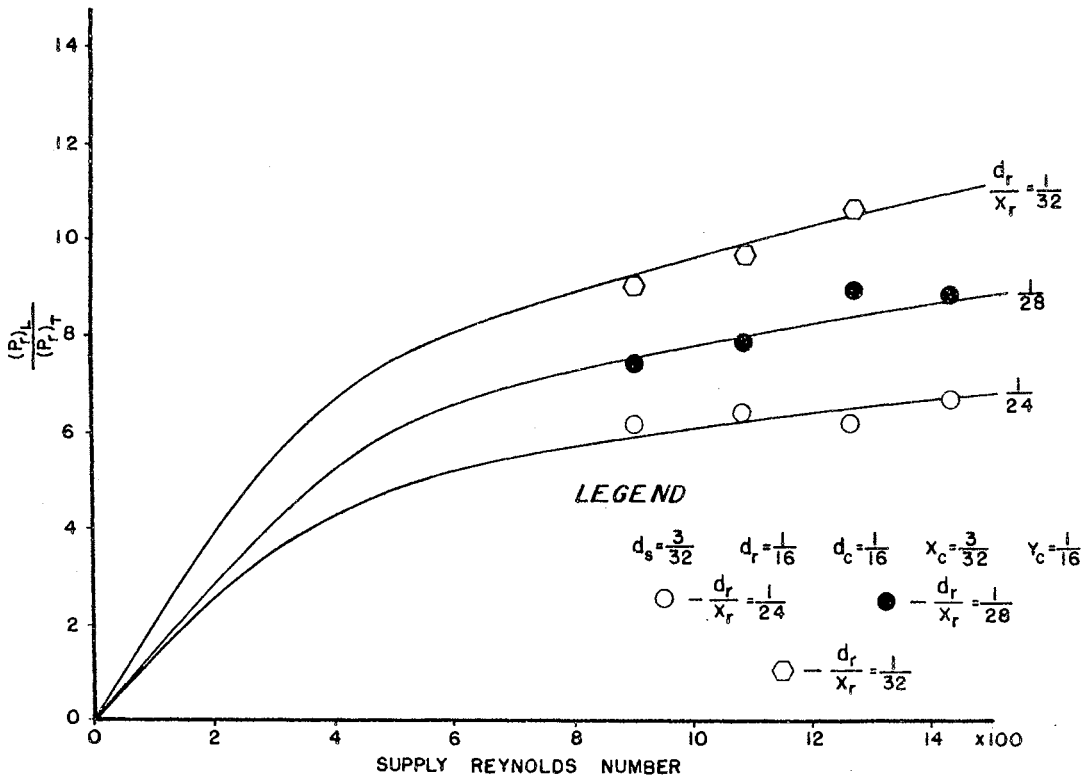

Fig. 13. Receiver Pressure Ratio Curves

are other factors that must be examined experimentally before sufficient information will be available to accurately specify the correct TA configuration.

Determination of Operating Characteristics

After having determined the validity of equation 5-22 and its usefulness, it remained to be determined how other factors influenced the operation of the TA. Among those factors to be considered were the following: x_c and y_c, the x and y - direction displacement of the control nozzle; d_r, the diameter of the receiver nozzle desired with respect to output flowrate; d_c, the control nozzle size; the fan-out ratio; and the flow and pressure gains.

The first of these factors to be determined was that of the proper x - direction displacement of the control nozzle. In order to make this selection, all other factors were arbitrarily selected and held constant while an input-output curve was plotted for various x_c distances. Shown in Fig. 14 is a typical set of curves resulting from this investigation. The value of x_c was selected so that the greatest pressure gain value resulted. The pressure gain for curve 1 is given by

$$G_{p_1} = \frac{\Delta P_r}{\Delta P_{c_1}} = \frac{P_{r_L} - P_{r_T}}{P_{c_{T_1}} - P_{c_L}} .$$

For a constant ΔP_r it is obvious from Fig. 14 that curve 1 gave the smallest value of ΔP_c and resulted in the largest value of G_p. In other words

$$\frac{\Delta P_{r_1}}{\Delta P_{c_1}} > \frac{\Delta P_{r_2}}{\Delta P_{c_2}} > \frac{\Delta P_{r_3}}{\Delta P_{c_3}} .$$

Corresponding curves for various other TA configurations and supply pressures were of a similar shape and yielded the same conclusion, that is, a x_c of approximately one diameter ($x_c = d_s$) yielded the highest pressure gain. Thus in the remaining investigations x_c was adjusted to be approximately equal to d_s. Values of x_c much less than d_s were not found to be practical since for these values of x_c, a portion of the control jet intercepted the supply nozzle, not the supply jet. This essentially decreased the effectiveness of the control jet by reducing the amount of the jet that actually interrupted the supply jet. Hence values of x_c less than d_s caused a corresponding decrease in the pressure gain.

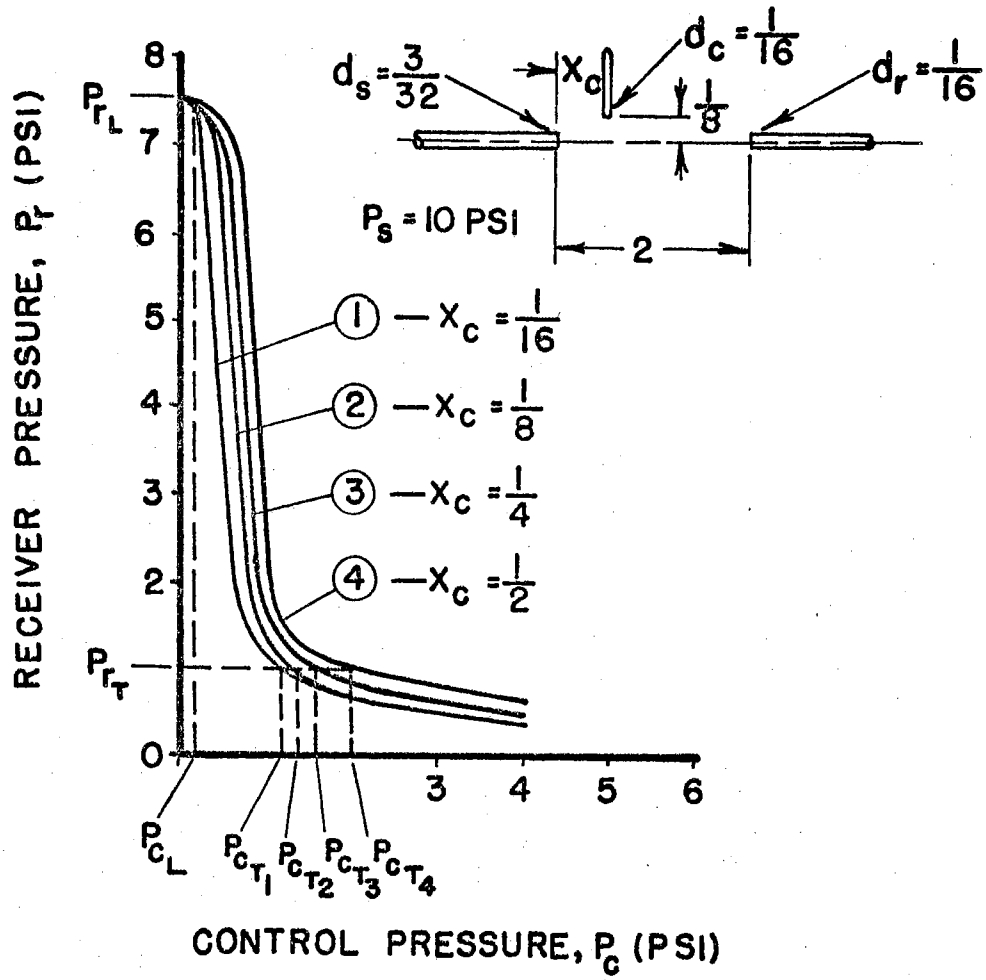

Fig. 14. Input-Output Curves to Determine x_c

The fact that the input-output curves shown in Fig. 14 gave the lower values of pressure gain for the higher values of x_c may be accounted for by considering the changing velocity profile of the supply jet. A possible explanation follows. If one considers that the area occupied by the supply jet increases in the downstream direction, then it may be seen that the area of the supply jet intercepted by the control jet becomes proportionally less as x_c is increased. Thus the control jet affects a smaller portion of the supply jet as x_c is increased, and hence, a larger control flow

is required to completely upset the laminar supply stream. The net result, then, is a corresponding decrease in the pressure gain for each increase in x_c.

The second factor considered was the y - direction displacement of the control nozzle. The criterion for selecting the proper y_c was again that value which would result in the highest value of pressure gain. A plot of the response curves for various values of y_c, holding other parameters constant, produced a set of curves very similar to those shown in Fig. 14. These curves resulted in the conclusion that y_c must be held as small as possible without allowing the nozzle itself to interfere with the supply jet.

The task of selecting d_c, the size of the control nozzle, was not as simple as selecting its proper location. In addition to determining the control flowrate for a given control pressure, the influence of d_c is felt in the selection of other parameters as well. This can best be seen by considering the method in which the TA's are to be utilized. The designer wishes to build a number of identical units that may be directly interconnected, that is, the output of one may lead directly to the input of another. In this case the input flowrate required by the driven TA will equal the output flowrate demanded of the driving unit. An increase in d_c will require an increase in the flowrate of the input of the driven unit and will subsequently demand an increase in the output flowrate of the driving amplifier. This increase in the output flowrate may in turn be achieved by an increase in d_r. However, by referring to Fig. 11, 12, or 13 it may be seen that an increase in d_r results in a decrease in the pressure ratio P_{r_L}/P_{r_T} which is undesirable.

This ratio is most easily increased by decreasing d_r, however, in doing so d_r may be decreased to the extent that the output flowrate of the amplifier would not be sufficient to drive the input of another. Thus a proper selection of d_c and d_r could not be made without considering the over-all functioning of the TA. A compromise solution is best arrived at as described in the following paragraphs.

Since neither d_c nor d_r may be determined explicitly, the designer must at this point revert to a trial and error method. However, it should be remembered that he need not trust entirely to luck since he may use equation 5-22 in selecting a suitable starting point. The first step then is to determine values of R_e, x_r and d_r from equation 5-22 that are practical, are within the limitations pointed out in Appendix A, and produce a high P_{r_L}/P_{r_T} ratio. Since x_c and y_c may be selected as described previously in this section, these values may now be determined. A value of d_c is arbitrarily selected with $d_c = \frac{1}{2}d_s$ being a good starting point. An input-output curve such as that shown in Fig. 10 is next experimentally determined for this particular TA configuration. Then a family of receiver load curves (receiver pressure vs. receiver flowrate) is plotted, using the various values of P_c used in obtaining the input-output curve for the third variable. It will be shown later that with the input-output curve and the family of load curves, it can be determined whether or not the values of d_r and d_c used are suitable. In making this determination it is necessary to have one additional piece of information, that being either an equation giving the relation between the control pressure and flowrate or an empirically determined curve showing this relation. The suitability

of d_r and d_c is based on whether or not that particular TA configuration will yield a fan-out ratio of two or greater. This criterion must be met since a TA must be able to drive at least two more amplifiers in order to perform some of the logic functions described in Chapter II. If d_r and d_c are found not to be suitable, either of them is adjusted and the above procedure repeated.

The exact method of determining the suitability of a particular d_r and d_c will be explained by considering specific examples investigated during this study. Before a suitable set of values was arrived at, others were tried and rejected; however, discussion of the rejected values will be delayed until after consideration of appropriate values of d_r and d_c. Later discussion will reveal that a d_r of 1/32 inch will not allow a sufficient output flowrate for the range of values being investigated in this study, hence a $d_r = 1/16$ inch will be considered in the present discussion. Also the supply nozzle will be restricted to values less than 3/32 inch in diameter due to excessive flowrates through nozzles larger than this size.

Considering equation 5-22 and the restrictions given in Appendix A for a $d_s = 1/16$ indicated that a configuration of $x_r = 1\ 3/4$ and a Re = 800 might give suitable results. A value of $d_c = 1/32$ was selected and the curves shown in Figures 15 and 16 were plotted using this TA configuration. The first step was to determine from Fig. 15 the maximum value of P_c allowed in order for the amplifier to remain in the "on" state. This maximum P_c was selected as the point A in the figure for at this point P_r is still within 10% of its maximum value, and the curve falls away sharply for P_c greater than this value. In this case, the maximum P_c allowed in order to retain the amplifier

in the "on" state was 0.75 psi. This pressure, $P_c = 0.75$ psi, determined the value to which P_r had to be lowered (by increasing P_c) before the amplifier could be considered "off." That is, since the output of the amplifier being tested might be required to drive the input of another identical TA, P_r must be less than or equal to 0.75 psi to be considered "off." This is true since the input of the driven TA must be less than 0.75 psi in order for the driven output to be "on." It should be emphasized that in all cases where the output of one TA was considered feeding directly into the input of another, the operating characteristics were assumed to be identical for both TA's.

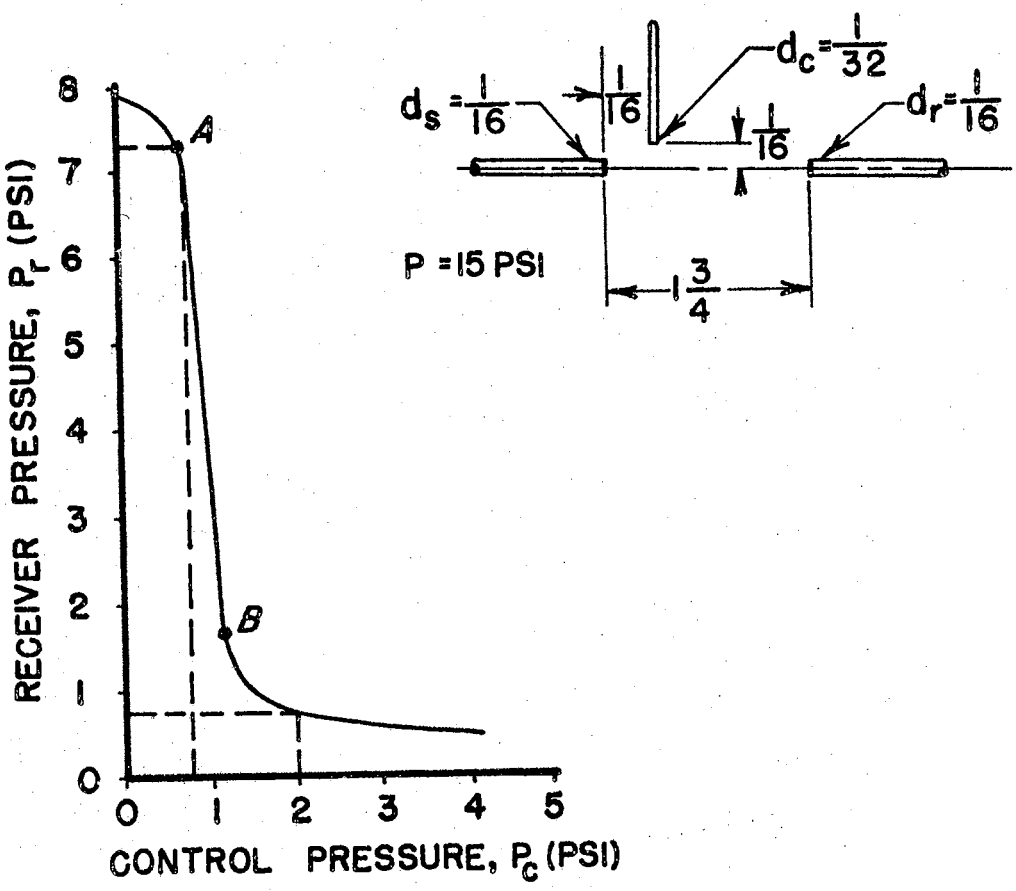

Fig. 15. Input-Output Curve

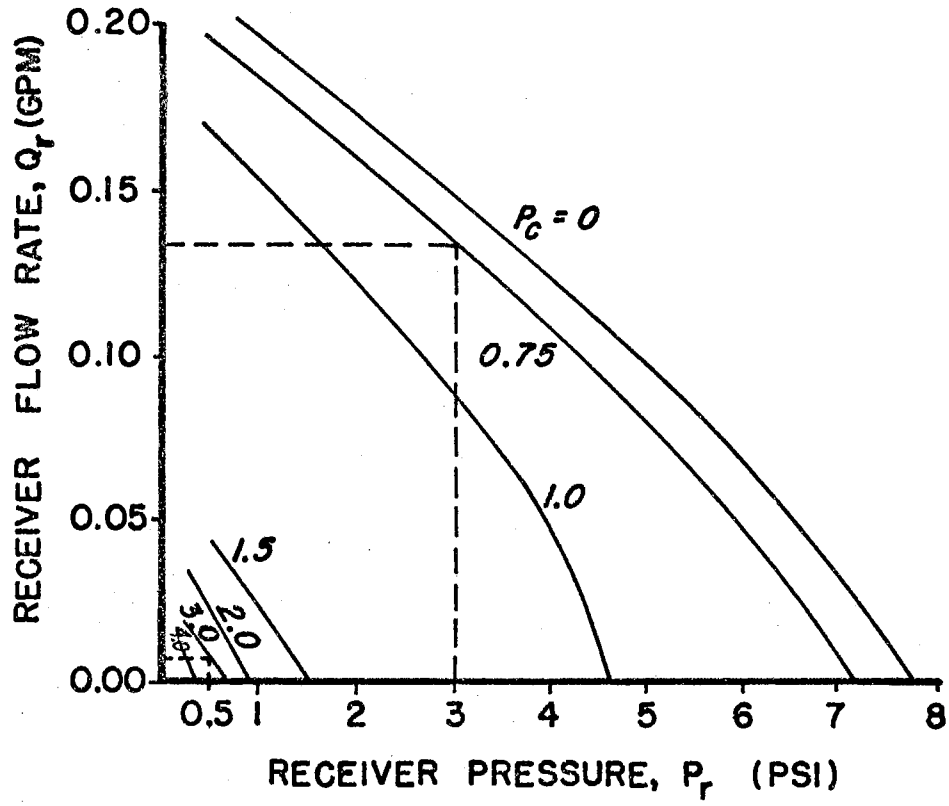

Fig. 16. Receiver Pressure-Flow Characteristics

This value of $P_r = 0.75$ psi in turn determined the value to which P_c had to be raised to turn the amplifier "off" and for the situation at hand $P_r = 0.75$ psi for $P_c = 2.0$ psi. A value of $P_c = 3.0$ psi was taken to provide a margin of safety or to insure that the TA was turned "off." From the equation relating P_c to Q_c or the plot of P_c vs. Q_c the flowrates for these two values of P_c were obtained. In this case,

P_c (off) = 0.75 psi $\qquad$ P_c (on) = 3.0 psi

Q_c (off) = .008 gpm $\qquad$ Q_c (on) = .03 gpm.

By referring to Fig. 16, it was determined that for $P_c = 0.75$ psi a value of $P_r = 3.0$ psi gave an output flowrate of $Q_r = 0.134$ gpm. Thus it was concluded that since this value of Q_r was at least a factor of four greater than Q_c (on), for the same pressure value, this particular TA would be able to simultaneously turn off four other TA's. That is, it has a fan-out ratio of four. The only additional check to determine the suitability of this TA configuration was to decide whether or not it will allow the next amplifier to be fully "on" when this one was in the "off" state. The answer was quickly determined in the affirmative by noting in Fig. 16 that for $P_c = 3.0$ psi and $Q_r = 0.008$ gpm, $P_r = 0.50$ psi, which was well below the maximum value allowed of 0.75 psi.

The particular TA configuration determined suitable in the preceding paragraphs did not at first appear to be the most appropriate. Inspection of Figures 11, 12 and 13 indicated that a choice of $d_r = 1/32$, $x_r = 1\ 3/4$ and Re = 1000 was a likely starting point since these values produced a very high P_{r_L}/P_{r_T} ratio. However, experimental investigation quickly showed that no matter how d_c was varied, $d_r = 1/32$ would not allow a sufficient output flowrate. Thus a d_r greater than one thirty-second of an inch had to be selected.

A TA configuration consisting of a $d_r = 1/16$ and a $d_s = 3/32$ was found suitable on the basis of a fan-out ratio of two or greater. However, this arrangement was not considered practical because the supply flowrate necessary to produce the required Reynolds number was approximately 0.7 gpm and this was considered too high on the basis of power consumption.

The method described in the preceding paragraphs was used throughout this study to determine the suitability of a particular TA design. The most frequent reason for rejection of a set of values was a fan-out ratio less than two. However, in the case in which

$d_s = 1/16$ in.	$d_r = 1/16$ in.	$d_c = 1/32$ in.
$Re_s = 800$	$x_r = 1\ 3/4$ in.	$y_c = 1/16$ in.
		$x_c = 1/16$ in.

the fan-out ratio was found to be equal to four, and as such was determined to be a suitable TA design. For this configuration the pressure gain was determined to be

$$G_P = \frac{7.20 - 0.75}{3.00 - 0.75} = 2.63.$$

A value for the flow gain could not be evaluated since a no-load condition was not obtainable; however, a better indication of the efficiency of the TA is the power gain. The power gain is defined as the change in output power divided by the corresponding change in input power.

$$G_{pow} = \frac{3.0(0.134) - 0.50(.008)}{3.0(0.030) - 0.75(.008)} = 4.74$$

Although the above quoted values of pressure and power gain appear to be quite low compared to other bi-stable amplifiers, it should be recalled that the definition of gain used above is not exactly the same as the definition used in conjunction with other fluid amplifier devices. The usual definition of pressure gain would be the slope of the line between points A and B in

Fig. 15, and in this case would yield a value of approximately thirteen. The power gain would correspondingly be much greater. However, it was felt that the definition used in this study would be an overall, operational gain, and hence, would give a better insight of the true operational characteristics of the TA.

Experimental Procedure

In most experimental work an effort is made to exclude the effects of all factors that are not to be considered in the experiment (sometimes called noise). In the present study an attempt was made to isolate the experimental model from the influence of all factors other than those discussed in this chapter. Those factors considered were carefully controlled and measured so that an accurate record of the proceedings could be kept.

The test stand constructed for this study was designed to provide a very steady pressurized fluid source in the pressure range 0-60 psig. A pressurized reservoir was utilized to provide the source fluid, thus eliminating pulsations experienced when a hydraulic pump is employed for this purpose. The stand was designed to accurately deliver and measure various supply and control flows and to measure and control the output flow. A schematic diagram of the test stand is shown in Fig. 17.

In addition, the turbulence amplifier model constructed was designed to eliminate as many outside influences as possible and to permit adjustments to be easily made to the internal dimensions. For these reasons the model was made much larger than an actual working model would be. In this way, any effects the walls might

have on the supply jet were virtually eliminated. The vent ports were made as large as possible to insure no back pressure inside the model that would be reflected as an output pressure. Fig. 18 shows a detailed design of the model used in this investigation, while Fig. 19 gives a detailed drawing of a typical supply nozzle. The supply nozzles were made geometrically similar by making the length to diameter ratio for each one equal to twelve. The control and receiver nozzles were constructed similarly with a length to diameter ratio of six. Figures 20 and 21 show photographs of the assembled TA and disassembled view respectively.

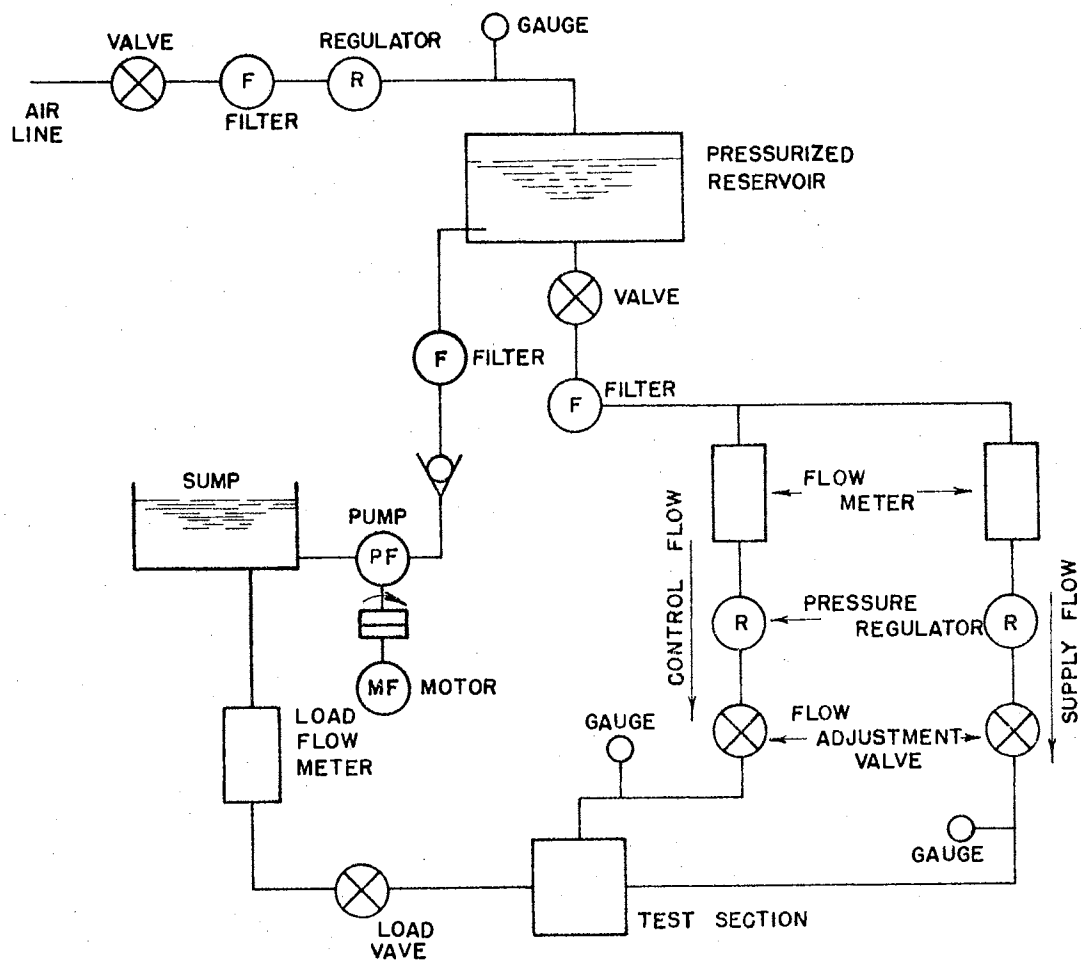

Fig. 17. Schematic Diagram of Test Stand

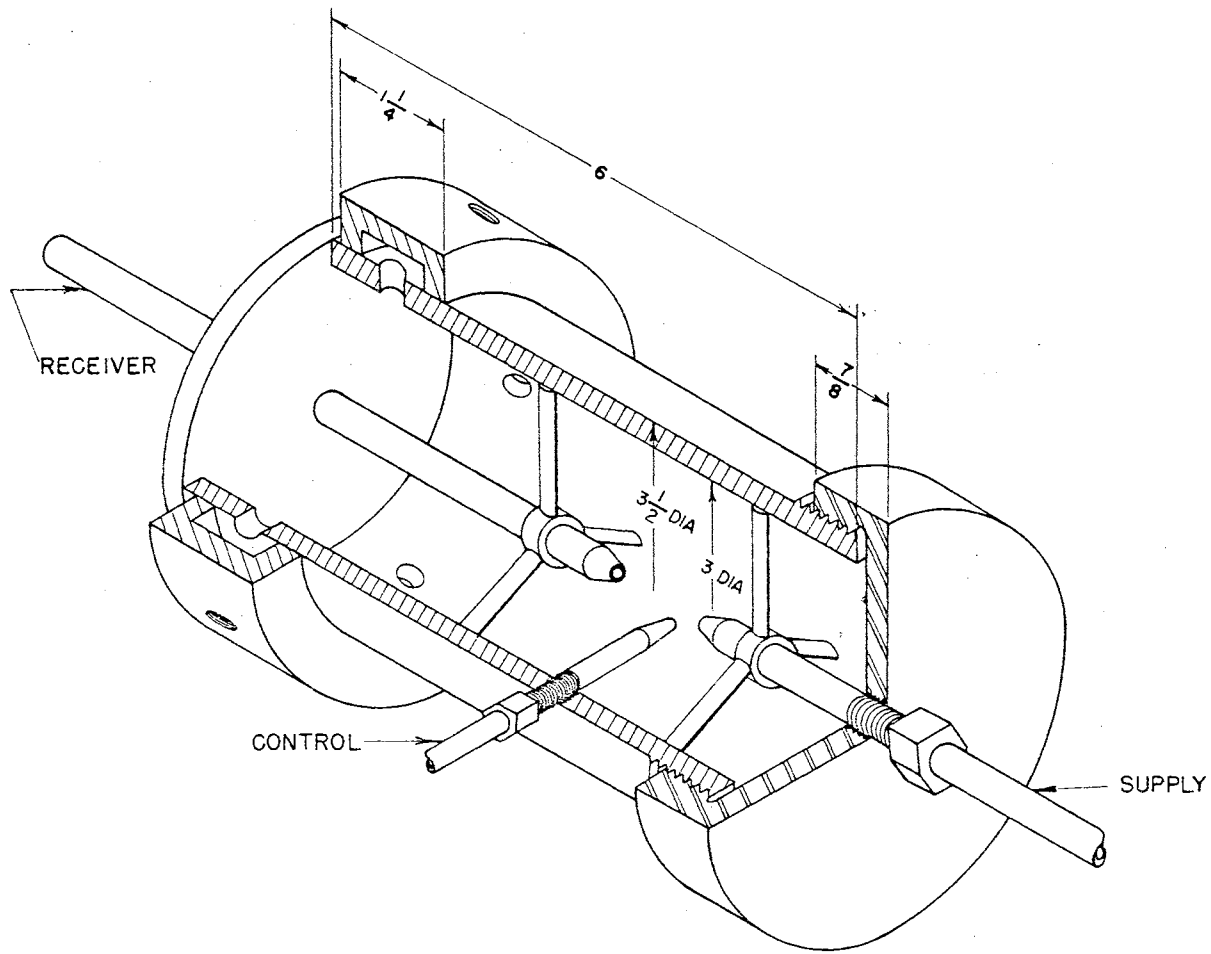

Fig. 18. Turbulence Amplifier Model Details

In an attempt to insure accuracy and reliability in the results obtained from the model, the ends of the supply and receiver tubes were supported by tripod-like devices shown in Figures 18 and 21. However, some misalignment was present as was evidenced by the sometimes irrational and unreliable data obtained with supply nozzles of diameters of 1/32 and 1/64 inch. Although this misalignment of the nozzles was present, it had a negligible effect on the results with nozzles of a larger size.

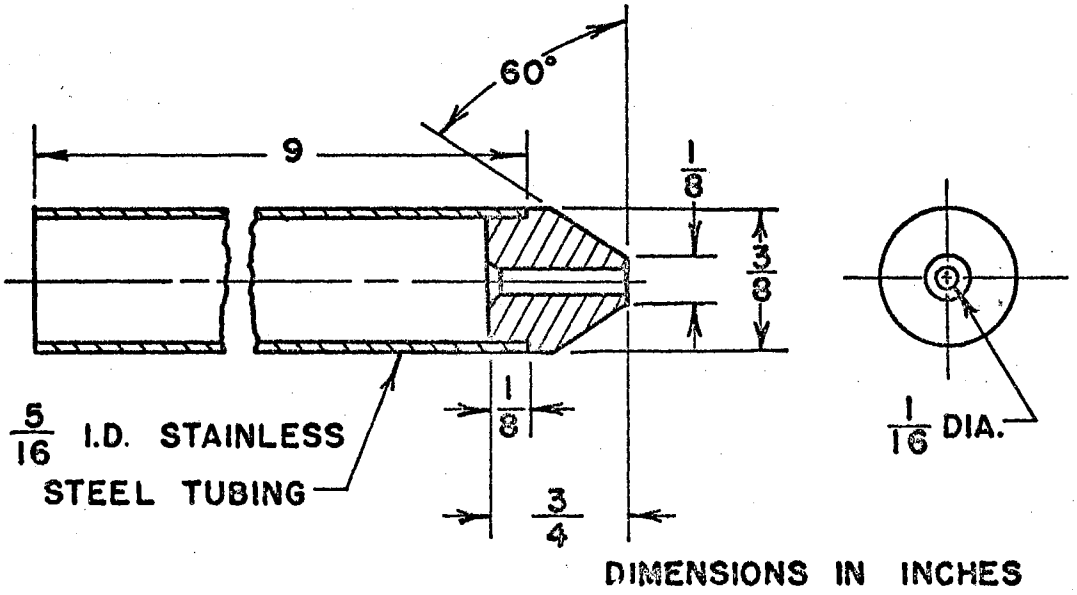

Fig. 19. Supply Nozzle Details

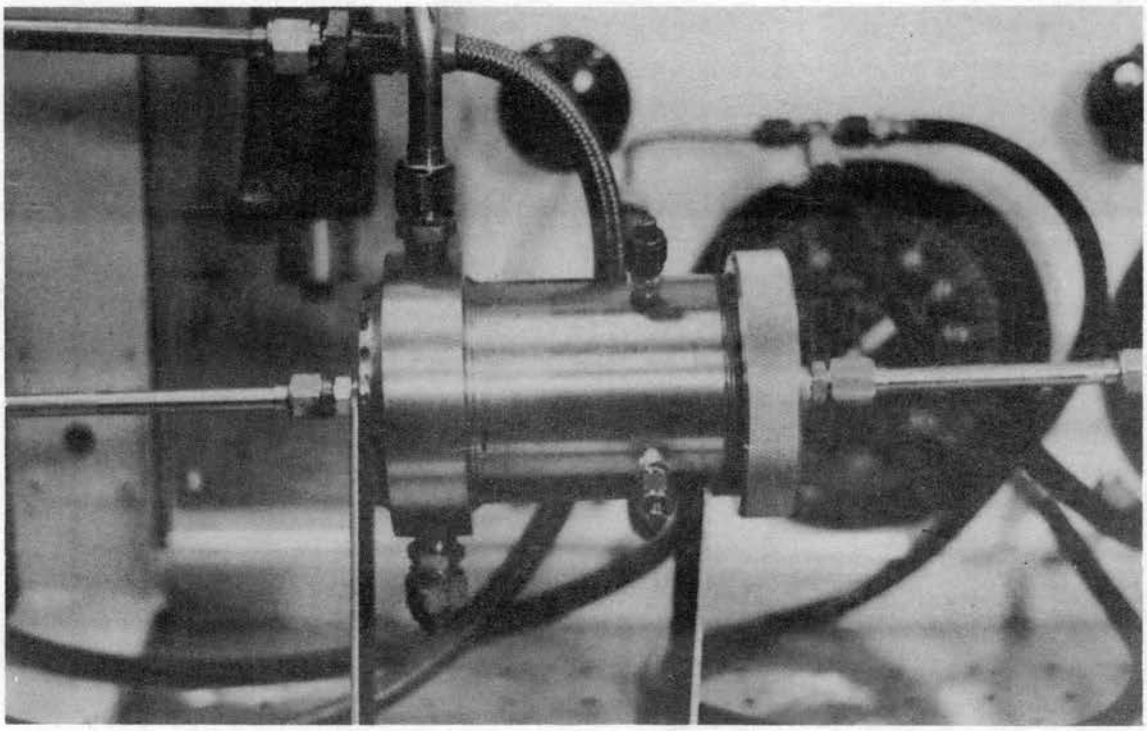

Fig. 20. Turbulence Amplifier Test Model

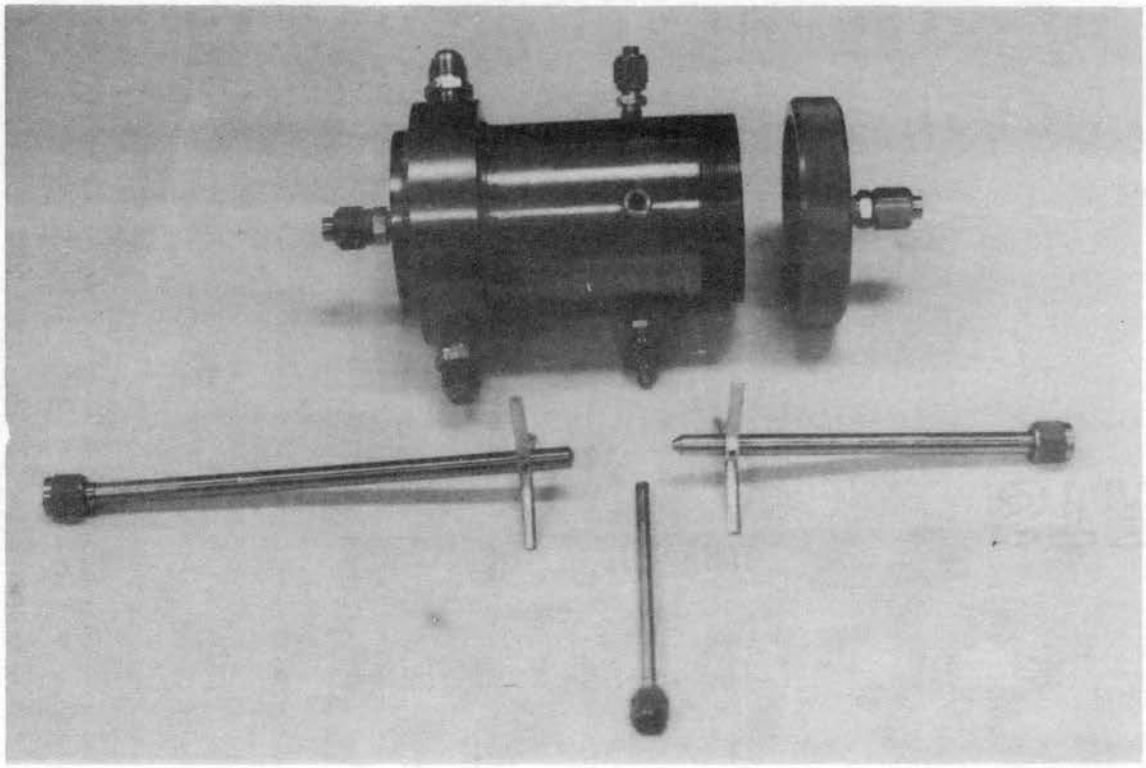

Fig. 21. Exploded View of TA Test Model

CHAPTER VII

RESULTS AND CONCLUSIONS

The objectives of this study were met with what could generally be regarded as favorable results. The requirement of determining the conditions under which the supply jet would remain laminar had to be determined experimentally during the course of this study since the author could find no previously published information on this subject. The fact that this information had not been previously recorded was somewhat surprising since it most certainly has application in studies involving submerged jet deflection and penetration. Appendix A details the method used to obtain the correlation between the Reynolds number and the distance the jet could be expected to remain laminar and presents the results of this phase of the study in the form of a non-dimensional plot.

The first section of Chapter V reviews some of the analytical work of H. Schlichting (14) in describing a jet and then details an extension of his work as it applies to this study. Schlichting started with the Navier-Stokes equations and the continuity equation and derived the following relation for the x-direction velocity profile in the case of a laminar jet.

$$u = \frac{\nu}{x} \frac{2\gamma^2}{1 + \left(\frac{\gamma y}{2x}\right)^2} \tag{7-1}$$

A similar velocity profile was obtained for the case of the turbulent jet by replacing the kinematic viscosity ν for laminar flow by the virtual kinematic viscosity ε_o of turbulent flow. Using these velocity profiles and taking into account the effective origin of the jet x_o, the following receiver pressure ratio equation was derived.

$$\frac{P_{r_L}}{P_{r_T}} = \frac{1 - \dfrac{1}{\left[1 + \dfrac{3}{4}\left(\dfrac{Re}{16}\,\dfrac{d_r}{x_o + x_r}\right)^2\right]^3}}{1 - \dfrac{1}{\left[1 + \left(3.7925\,\dfrac{d_r}{x_r}\right)^2\right]^3}} \tag{7-2}$$

This equation related the receiver pressure for the laminar case to that for the turbulent case and may be used as a helpful aid in the initial design work of a TA.

Equation 7-2 is not a complete description however, and several restrictions and assumptions were made during the analysis. At this point it is appropriate that all the assumptions made in deriving equation 7-2 and the limitations imposed on it be repeated to insure that its capabilities and limitations are clearly understood. In deriving the velocity profiles, Schlichting assumed steady, incompressible flow in which no body or field forces were present and in which the φ-component of the velocity was zero. It had to be further assumed that the receiver would never be placed within the zone of flow establishment of the supply jet, that is, it would always be at least 10-12 diameters downstream. The receiver was also restricted to have a diameter no larger than that of the supply nozzle. The additional assumption was made that the initial velocity profile at

the supply nozzle exit was uniform, and as such, restricted the supply flow to have a Reynolds number greater than 360. The maximum Reynolds number allowed and its relation to the maximum receiver displacement, x_r, is another limitation that must be recognized and is recorded in Appendix A. The appropriate values of x_c, y_c and P_c, the control nozzle displacement in the x and y directions and the control pressure respectively, cannot be determined from equation 7-2 and hence, must be determined experimentally.

It might appear that the above assumptions and restrictions would so handicap the final result as to render it useless. However, the contrary appears to be true. The TA's tested in this investigation fell quite easily within the limitations imposed above. The data presented in the first section of Chapter VI verified that, within the range of values tested, equation 7-2 would predict the general trend of the receiver pressure ratios. Equation 7-2, given as equation 5-22 in Chapter V, is a significant step forward in the analytical description of the TA.

The second section of Chapter VI presents criteria by which those parameters not determined through the use of equation 7-2 could be determined experimentally. For a proposed TA configuration, only two graphs need be experimentally determined to ascertain the suitability of that configuration. A plot of control pressure versus receiver pressure and a plot of receiver pressure versus receiver flowrate for a particular TA will perform satisfactorily. Satisfactory performance is based on the ability of the TA to drive two or more TA's identical to itself, since emphasis is placed on designing amplifiers for interconnection and use with other TA's.

Since both the bistable fluid amplifier and the turbulence amplifier require a constant source of supply fluid, the power consumption of these devices is an important consideration. As pointed out in Chapter VI, the flowrate through the supply nozzle with a 3/32 inch diameter was too great to be considered practical (approximately 0.7 gpm). A TA configuration using a supply nozzle with a 1/16 inch diameter was found to be suitable at a flowrate of 0.3 gpm. TA's operating at this flowrate would not cause excessive power losses if the entire system were comprised of only a few TA's or if the source fluid were originally delivered at a relatively low pressure (100-200 psi). However, the need still exists for an amplifier element that will consume even less power. Due to certain minor machining inaccuracies, the experimentation could not be carried out reliably for supply nozzle diameters of 1/32 inch or less. However, the theory and experimental procedure presented in this study could most certainly be extended to include these smaller sizes. Tests indicated that a TA with a supply nozzle of 1/32 inch diameter would probably operate at a flowrate of less that 0.1 gpm. Thus low power consumption could easily become one of the major advantages of the TA.

The proposition that the TA could be easily interconnected with other TA's was one of the major reasons for this investigation. The results presented in Chapter VI have shown this proposition to apparently be true and as such is perhaps the most significant of the turbulence amplifier's characteristics.

The fact that all logic functions may be performed with only NOR elements may, in some cases, be a disadvantage rather than an advantage. This fact is considered an advantage since only one

device need be manufactured to perform several functions. However, it might be thought of as a disadvantage since several of the NOR elements may be required to perform only one function. The real test as to whether this is an advantage or a disadvantage would come upon consideration of the type system in which the TA is to be used.

CHAPTER VIII

RECOMMENDATIONS FOR FUTURE INVESTIGATIONS

Any further investigation of the TA should, of course, include an extension of the theoretical description of the TA. It would be most desirable to be able to predict the effects of the control jet, that is, at what control pressure and flowrate would the supply jet be expected to become turbulent. Also a study of the deflection of impinging submerged jets of different sizes should be made so that Region 3 in Fig. 10 could be accurately described. A study of this nature would most likely have to stem from a comprehensive investigation into the mechanism of transition of a jet from the laminar to the turbulent state and vice-versa.

Most certainly of interest to any control system designer is the time response of the system. To effectively predict and control the time response of the over-all system, the transient characteristics of the individual components must be known. A thorough analysis in the area of transient characteristics of the TA is needed to give the designer this important information. This investigation, too, should be based on a thorough laminar to turbulent transition study.

During the course of the present investigation, the single factor that seemed to present the greatest deterrent to using a TA was its susceptibility to vibrations and noise disturbance. Although these factors were not explicitly investigated, it would seem likely that they might have an adverse effect on the operation of the TA. This

fact should become evident when considering that the supply stream was operated on the verge of instability. The supply stream was operated in this manner so that only a small input disturbance from the control jet would cause it to become turbulent. This input disturbance might also come from some outside noise or mechanical vibration, thus causing an errant output.

On the subject of vibrations and noise disturbances the H. & H. Machine Co. (8) pamphlet states that the pneumatic TA is able to withstand acoustic noise levels as high as any found in common industrial situations, however it can be disturbed by sharp mechanical shocks. The article goes on to report that the frequency of disturbing mechanical vibrations is high enough to be quite easily isolated by mounting the TA's on rubber gromments. Although this does not seem to be a serious problem in the use of pneumatic TA's, if the liquid models exhibit the same behavior, it would cast serious doubt on their applicability to mobile equipment. In this application, mechanical shocks of a large magnitude are almost certain to exist and would most likely be difficult to isolate.

Since, in addition to the above noise effects, the influence of pump noise was excluded from the present investigation, the next logical step in the experimental study of the TA would be to determine the consequences of noise and vibrations. This investigation should include the effects of pulsations in the supply flow as well as the results of mechanical vibrations on the TA. Since Auger (2,3) has developed and used TA's that are extremely sensitive to acoustical noise, the possible effects of such noise on a liquid type TA should also be investigated.

An area that has received considerable attention in the past few years, yet warrants further investigation, is the area of devices that may be used as final stage amplifiers. Since the output pressure for the TA configuration discussed in Chapter IV is 7.2 psi, the output of a TA will in general be too low to be used directly as a command signal in a high pressure hydraulic system. That is, the output of the TA will not be high enough to drive most pilot-operated power-valves nor will it operate many electro-hydraulic pressure switches. Hence some type of power amplifier must be used to amplify the final output of the control system to a higher level. The billet valve, as suggested by Caywood (5), is one such device. However, its application was somewhat limited in that two stages of amplification were required to raise the output pressure level from approximately 15 psi to 100 psi. Some device is needed that would allow one-stage amplification from 1-2 psi to 100 psi and not require a change in the working medium. That is, a device that would not require, for example, a change from the hydraulic to an electrical system and then back to the hydraulic system. A device such as this would find application in many places in the fluid amplifier field.

SELECTED BIBLIOGRAPHY

1. da C. Andrade, E. N. and L. C. Tsien. "The Velocity-Distribution in a Liquid-into-Liquid Jet." Proceedings of the Physical Society of London, Vol. 49 (1937), 381-391.

2. Auger, Raymond N. "How to Use Turbulence Amplifiers for Control Logic." Control Engineering, (June, 1964), 89-93.

3. Auger, Raymond N. "Turbulence Amplifier Design and Application." A.D. 297935, Vol. I (October, 1962), 357-366.

4. Brown, F. T. "Introductory Remarks." Symposium on Fully Separated Flows, ASME, (1964).

5. Caywood, James A., "The Feasibility of Applying Liquid Jet Amplifiers to Digital Control Systems on High-Power Hydraulic Machinery." M.S. Thesis, Oklahoma State University, 1965.

6. Domm, U., H. Fabian, O. Wehrmann, and R. Wille. "Contributions on the Mechanics of Laminar-Turbulent Transition of Jet Flow." Final Report - Contract No. AF 61(514)-808, prepared by the Herman Föttinger-Institute of Fluid Technology, Technical University of Berlin-Charlottenburg, (November, 1955).

7. Fitch, E. C., Dean M. DeMoss and James A. Caywood. Hydraulic Logic Manual. Manual prepared by the Fluid Power Controls Laboratory of Oklahoma State University, Stillwater, Oklahoma, for the Ford Tractor Division of the Ford Motor Company under Agreement No. 1, Letter of Record No. 3.

8. "Fluid Logic Fundamentals and the Turbulence Amplifier." Pamphlet prepared by Fluid Logic Division, H. and H. Machine Company, Norristown, Pennsylvania.

9. Levin, S. G., and F. M. Manion, "Fluid Amplification - 5. Jet Attachment Distance as a Function of Adjacent Wall Offset and Angle." A.D. 297895, Harry Diamond Laboratories, (December 31, 1962).

10. Pai, S. J. Fluid Dynamics of Jets. New York: D. von Nostrand Company, Inc., 1954.

11. Reichardt, H. Gesetzmässigkeiten der freien Turbulenz. VDI-Forschungsheft, 414 (1942), 2nd Ed. 1951. (Ref. by H. Schlichting, Boundary Layer Theory).

12. Reid, Karl N. Jr. "Static and Dynamic Interaction of a Fluid Jet and a Receiver-Diffuser." Sc.D. Thesis, Massachusetts Institute of Technology, September, 1964.

13. Reynolds, A. J. "Observations of a Liquid-into-Liquid Jet." Journal of Fluid Mechanics, Vol. 14 (1962), 552-556.

14. Schlichting, H. Boundary Layer Theory. New York: McGraw-Hill, 4th Ed., 1962.

APPENDIXES

APPENDIX A

DETERMINATION OF THE MAXIMUM LENGTH OF A LAMINAR JET

The point at which a laminar jet becomes turbulent is quite arbitrary, but for the purpose at hand the following method of determination was adequate. For a known d_s and x_r, the value of the supply Reynolds number Re_s was varied over a range of values while the receiver pressure P_r was recorded at each setting of Re_s. The receiver pressure was then nondimensionalized by dividing each reading by the maximum P_r so that a plot of $P_r/P_{r\ max}$ versus Re_s could be made. The resulting plot for various x_r/d_s ratios is shown in Fig. 22. The point of maximum pressure or the point of $P_r/P_{r\ max} = 1$ was chosen as the point at which the jet became turbulent.

Selection of the point of turbulence for various x_r/d_s ratios allowed the plotting of Fig. 23 which gives the number of diameters downstream a laminar jet may be expected to become turbulent for various Reynolds numbers. Since this curve was prepared from data obtained with a nozzle having a length to diameter ratio of twelve, nozzles of a different shape or configuration might be expected to produce slightly different results.

It should be noted that the curves in Fig. 22 are very similar to the curve shown in Fig. 2. Shown in Fig. 2 is the supply-receiver pressure relationship for the pneumatic TA. This gives a further indication that the operating characterists of the pneumatic and liquid type TA's should be similar.

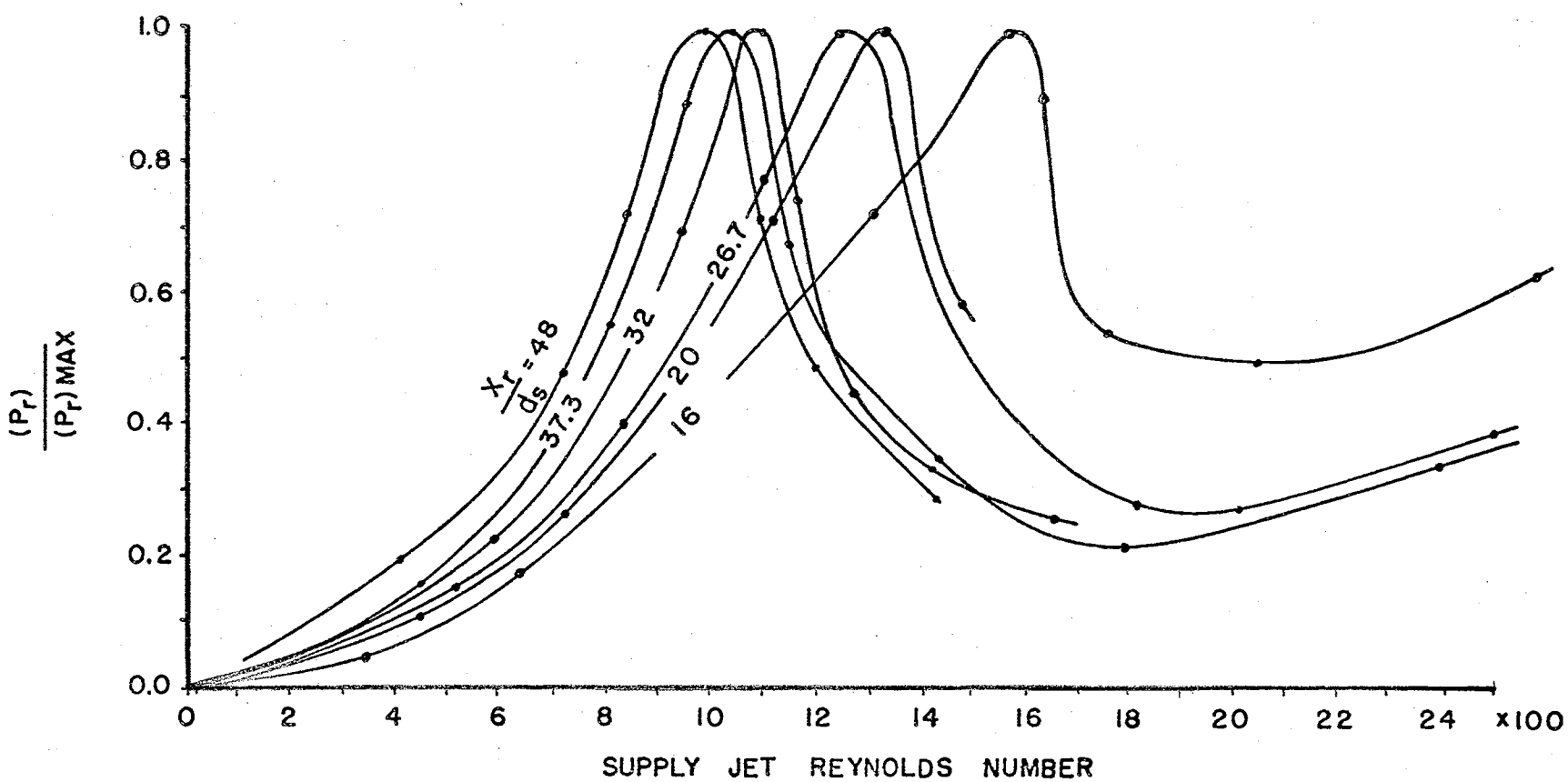

Fig. 22. Supply Reynolds Number vs. Receiver Pressure

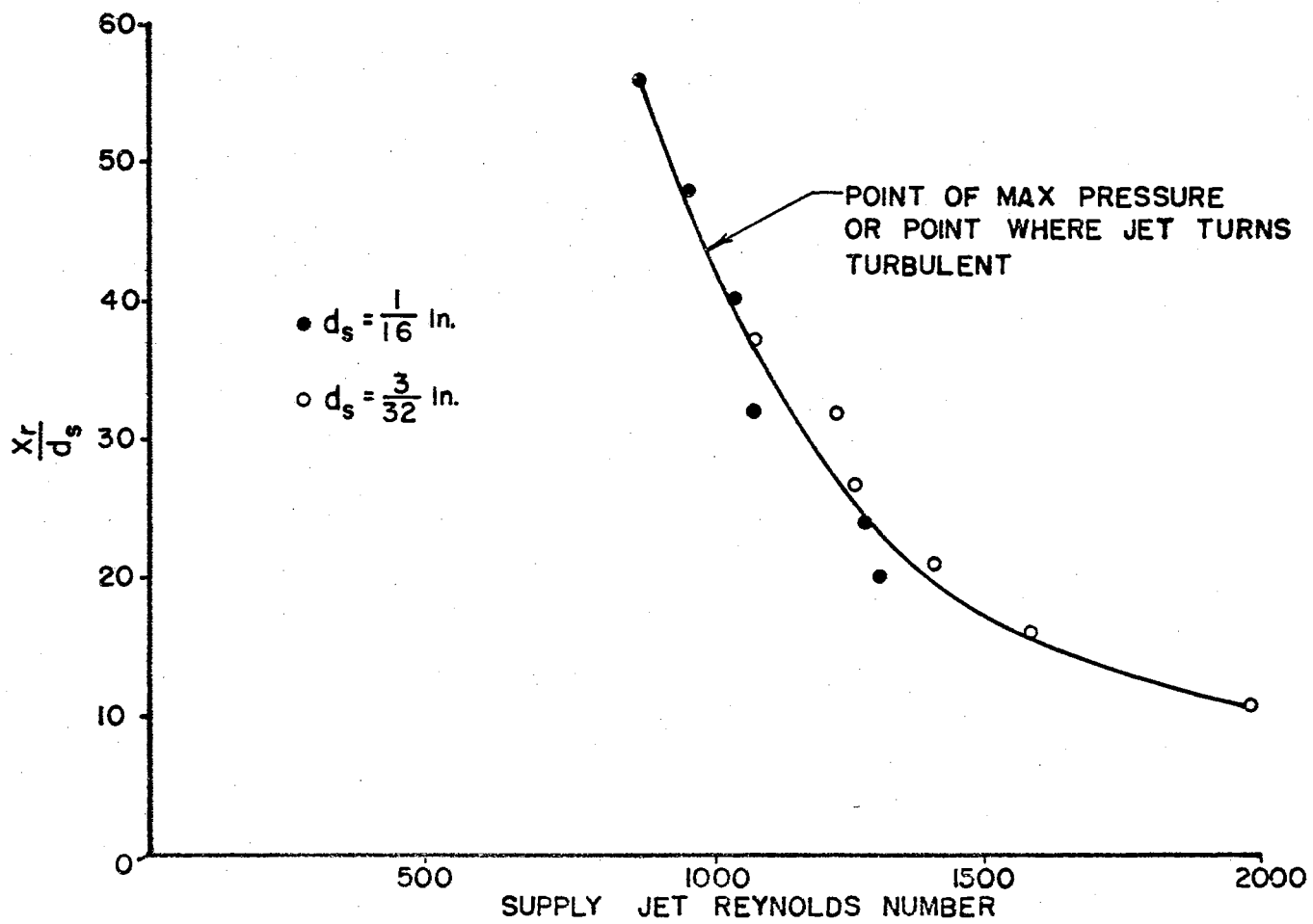

Fig. 23. Non-Dimensional Curve Showing Length of Laminar Jet

APPENDIX B

DERIVATION OF EFFECTIVE ORIGIN OF JET

The argument used in deriving the velocity profile of the circular jet assumed the jet to be issuing from an infinitisimal hole at an infinite velocity. Since jets produced for experimental work must, of course, issue from aperatures of a finite size, a discrepancy exists between actual measurements made on the jet and theoretical predictions. To account for this discrepancy the theoretical velocity profile must be modified to account for the fact that the theoretical and experimental jet models differ. This is accomplished by assuming the jet originated not at the nozzle end as shown in Fig. 24, but at some distance x_o inside the nozzle. The distance x_o is called the displacement of the "effective origin" of the jet.

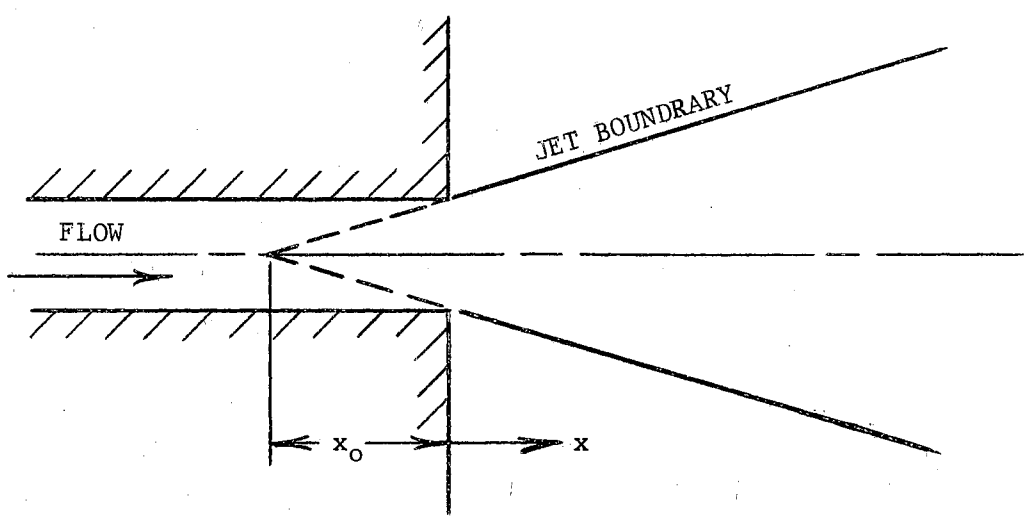

Fig. 24 Location of Effective Origin of Jet

The following procedure used to derive a value for x_o is similar to the method used by Görtler (9) to derive the corresponding quantity for a two-dimensional jet. The general method of procedure will be to replace the quantity x with $x + x_o$ in the velocity profile. The flowrate at any point in the jet is then evaluated using the modified velocity profile and equated to the flowrate at the nozzle exit. This allows an explicit determination of the value x_o.

$$Q = \int_A u \, dA = 2\pi \int_o^\infty u \, y \, dy$$

From equation 5-13

$$u = \frac{2}{x} \frac{\nu\gamma^2}{\left[1 + \left(\frac{\gamma y}{2x}\right)^2\right]^2}.$$

After replacing x by $x + x_o$ and substituting the equation for u into the above integral equation, we have

$$Q = 2\pi \int_o^\infty \left(\frac{2}{x + x_o}\right) \frac{\nu\gamma^2 y}{\left[1 + \left(\frac{\gamma y}{2(x + x_o)}\right)^2\right]^2} \, dy$$

$$= 4\pi\nu(x + x_o).$$

Since this equation should hold for all values of x, it may be evaluated at the nozzle where $x = 0$ and the flowrate is known to be $Q = \pi r_s^2 \bar{u}$. Therefore

$$\pi r_s^2 \bar{u} = 4\pi\nu(\cancelto{0}{x} + x_o)$$

$$\frac{r_s^2 \bar{u}}{4\nu} = \frac{x_o}{r_s},$$

and since $d_s = 2r_s$, we get

$$\frac{x_o}{d_s} = \frac{Re}{16} = 0.0625 \text{ Re}.$$

Andrade and Tsien made an experimental determination of the displacement of the effective origin and found the following to be true.

$$\frac{x_o}{d_s} = 0.040 \text{ Re}$$

It is interesting to note that their empirical equation is of the same form as the analytically derived equation, differing only by the constant coefficient of Re. This small difference is most likely due to experimental error.

The development of x_o for a turbulent jet will be identical with that of the laminar jet if ν of laminar flow is replaced by ϵ_o of turbulent flow. However, since the Reynolds number is determined in the nozzle where the flow is still laminar, the Reynolds number must be based on ν and not ϵ_o. Hence, x_o for a turbulent jet is given by

$$\frac{x_o}{d_s} = \frac{Re}{16} \frac{\nu}{\epsilon_o}.$$

From this relation it may be seen that x_o for the laminar case and x_o for the turbulent case will differ by the factor ν/ϵ_o. For the present study, the actual value of x_o was of the same order of magnitude as x_r for the laminar jet and was at least an order of magnitude less than x_r for the turbulent jet. For this reason x_o was considered negligible in the calculation of the momentum flux captured in the receiver tube for the case of a turbulent jet. Including x_o in equation 5-20 did not substantially change the final result

of equation 5-22 while it did increase the complexity of the required calculations.

VITA

Ronald Francis Osborn

Candidate for the Degree of

Master of Science

Thesis: A THEORETICAL AND EXPERIMENTAL INVESTIGATION OF A LIQUID-TYPE TURBULENCE AMPLIFIER

Major Field: Mechanical Engineering

Biographical:

Personal Data: Born near Mannford, Oklahoma, December 8, 1939, the son of Archie F. and Winnie M. Osborn.

Education: Graduated from Pawnee High School in 1958; received the Bachelor of Science degree from Oklahoma State University, with a major in Mechanical Engineering, in May, 1964; completed requirements for the Master of Science degree in April, 1965.

Experience: Attended U. S. Army service schools at Fort Benning, Georgia, during summers of 1961 and 1962; employed by the School of Mechanical Engineering of Oklahoma State University as an undergraduate teaching and Research Assistant from February to August, 1963, as a graduate Research Assistant from September, 1963, to August, 1964, and as Project Associate from September, 1964, to May, 1965. Member of Oklahoma Army National Guard since 1958 and held position as Commanding Officer of Guard Unit in Pawnee, Oklahoma, from April, 1963, to May, 1965.

Organizations: Member of Pi Tau Sigma and American Society of Mechanical Engineers.