DETERMINATION OF LASER POWER REQUIREMENTS FOR LASER DOPPLER ANEMOMETERS

By

PHILLIP JOSEPH WALLEN

Bachelor of Science

University of Oklahoma

Norman, Oklahoma

1970

Submitted to the Faculty of the Graduate College
of the Oklahoma State University
in partial fulfillment of the requirements
for the Degree of
MASTER OF SCIENCE
July, 1973

DETERMINATION OF

LASER POWER REQUIREMENTS

FOR LASER DOPPLER

ANEMOMETERS

Thesis Approved:

Dennis K McLaughlin
Thesis Adviser

Robert W. Morse

W. A. Liederman

Gary L. McLuckie

N. N. Durham
Dean of the Graduate College

ACKNOWLEDGMENTS

I would like to express my thanks and appreciation to Dr. Dennis K. McLaughlin for his guidance, support and most of all patience throughout the course of this study. I would also like to thank Dr. William Tiederman for his helpful comments and Mrs. Janet Gustafson for typing this manuscript.

Special thanks to my wife, Nancy, for her support, encouragement, and many sacrifices.

TABLE OF CONTENTS

LIST OF TABLES

LIST OF FIGURES

NOMENCLATURE

A_{Lens}	projected surface area of collection lens
A_o	cross-sectional area of scatter volume, mm^2
A_s	projected surface area of particle that scatters light to collection lens
e_{B_ℓ} and m_{B_ℓ}	amplitude functions based on refractive index and particle size
b	laser beam diameter at laser
b_o	laser beam diameter at probe volume
d	diameter of particle
E	electric vector of radiation
E_o	electric vector of radiation at probe volume
f_L	focal length of sending lens
$F(\alpha, \Theta, m)$	amplitude function for Mie scattering
i	imaginary number, $i = -1$
$I_{s,Lens}$	intensity of scattered light falling on collection lens, watts/mm^2
I_o	intensity of light at the scatter volume, watts/mm^2
P_{sLens}	power of scattered light falling on collection lens, watts
P_o	power of light at scatter volume, watts
L	distance between fringes
$P_\ell^{(1)}\cos$	associated Legendre Polynomials and their derivatives
r	distance between scatter volume and collection lens

Greek Letters

α	size parameter, $\alpha = \pi d/\lambda$
β	included angle formed by two incident beams
θ	angle subtended by the optical axes of the sending optics and collection optics, i.e. the collection angle
λ	wavelength of light
ρ	reflectance, ratio of reflected light to incident light

CHAPTER I

INTRODUCTION

In recent years the increased popularity and use of the Laser Doppler Anemometer (LDA) has brought about an interest in determining specific criteria for laser power requirements. The experimental work reported herein was performed with the purpose of determining laser power requirements given a specific set of parameters which describe the physical situation. Before listing these parameters a brief description of the LDA system follows.

The particular LDA system used in this investigation is commonly known as the dual scatter or scatter-scatter system. This system was chosen because of its relative ease of alignment and increased signal to noise ratio (SNR) in comparison to the reference scatter system as described by Meyers (1) and Lennert et al. (2). In the dual scatter system, the monochromatic light from the laser is split into two equal intensity and coherent light beams which are then focused to a common point hereinafter referred to as the scatter or probe volume. Due to the wave nature of the light, the two light beams will interfere constructively and destructively to establish a set of planar interference fringes (see Figure 1). When a particle in the flow passes through the scatter volume it will alternately scatter and not scatter light as the fringes are intercepted. By determining the frequency of the scattered light, the velocity of the particle and hence that of the

flow can be directly determined. A more complete description can be found from Lennert et al. (2) and Donohue (3).

Returning to the parameters that describe the above physical situation the primary parameters are 1) particle or scatter center size, 2) light collection angle, 3) index of refraction of medium and particle, 4) the distance of collection optics from scattering source, and 5) intensity of light at the scatter volume. From these parameters and the given characteristics of the light sensing device used, criteria were then developed for projecting the laser power requirements for a given set of circumstances.

To date, little has been done as far as projecting laser power requirements for laser anemometry, but individual efforts have been made with regard to the variables surrounding such projections.

The scattering of light is the basis of all LDA work and hence the projection of laser power requirements requires some knowledge of this phenomena. Generally, work involving LDA systems has as its main presumption the notion that light scatters according to Mie theory. Based on this, Meyers (1) has presented valuable information concerning scattered light intensity from small particles used in an LDA. Included in Meyers' work is information based on Mie theory concerning the dependence of scattered light intensity on particle size and collection angle which is of singular importance to backscatter modes of operation in LDA. In general van de Hulst (4) is an excellent reference concerning the intensity of the scattered light by particles whose diameter is on the order of the wavelength of the light. The relation of van de Hulst (4) concerning intensity of scattered light is used by Durst and Whitelaw (5) in their theoretical discussion of laser

power requirements for LDA's. However, Durst and Whitelaw (5) concern themselves only with the forward-scatter mode of operation and do not concern themselves with the angular dependence of the scattered light.

Scope of the Present Study

In view of Durst and Whitelaw's (5) theoretical work on laser power requirements and Meyers (1) on angular dependence of scattered light, a need for experimental verification arose which is the subject of the present study. Initially, there was some doubt as to the feasibility of such an undertaking in view of the limited laser power available and the optical configuration of light collection. The backscatter mode of operation and light collection was much more desirable from physical considerations because even though the intensity of light scattered in the forward direction (i.e. in the direction of the laser beam) is considerably greater than in the rearward direction, the ability to have sending and collecting optics mounted on one traversable plate the problem of moving the scatter volume for data collection in the typical wind tunnel situation has been greatly reduced.

Scattering distances of approximately 7 3/4" and 15" were chosen as typical of many applications at Oklahoma State University. These two distances would also insure the relative accuracy of the data thru use of the inverse square law of light intensity. Data was then recorded in air at various velocities with the two scattering distances. Particle sizes of the scatter centers were varied to the extent available with the atomizing system used. From the data taken, the intensity of light striking the photo detector could then be determined for the various particle sizes. This information, coupled with the work of

previously mentioned investigators provides the necessary criteria for determining laser power requirements for various optical configurations.

The results of the experimental study are found in Chapter IV and the conclusions can be found in Chapter V.

CHAPTER II

EXPERIMENTAL APPARATUS AND TECHNIQUES

Collection Optics

In any LDA system operating in the backscatter mode one of the most important components is the collection optics. It was quickly determined that fine quality lenses were needed. Two Kodak Ektar Aerial lenses, f=2.5, provided the necessary optical quality as well as increasing the available solid angle for light collection. Initially, two mediocre lenses with a diameter of approximately four inches were used to collect the scattered light, but these would not focus parallel light to a small dot.

Optical Arrangements

Figure 2 shows a sketch of Optical System 1 as the various components were mounted on an aluminum plate 7/8" thick. In this arrangement, one beam splitter with no mirror is used with a sending lens which has a 15" focal length. Based on Meyers' (1) work, experimental verification and spatial restrictions, the collection angle was chosen to be 20° so as to maximize the intensity of the scattered light to the photo detector. The optical axis of all components was maintained at 3.625" above the aluminum plate.

Figure 3 shows a diagram of the sending optics for the first optical arrangement. The half wave plates were placed as shown so as to

orient the polarization of both beams identical to each other thus enhancing the heterodyning of the beams. The horizontal component of velocity was chosen to be measured because of the ease with which the air jets could be arranged. These jets will be described later in this chapter. With this particular configuration determination of velocities ranging from 10 to 50 feet per second were possible. Data was taken at three different velocities falling in the above mentioned 10 to 50 feet per second range due to the fact that SNR decreases with increasing velocity (i.e. frequency).

The second optical arrangement is shown in Figure 4. In this arrangement a mirror is used in conjunction with the beam splitter and the focal length of the sending lens was reduced from 15" to 6". As a result of the decrease in focal length, the collection angle had to be increased to 40° so as to avoid interference from the sending optics. The angle between incident beams was also increased which allowed the probe volume length to be decreased substantially as was required for the water channel measurements being conducted concurrently with this study. A single half wave plate was required for equalization of the individual beam intensities at the probe volume, with this arrangement (See Figure 5). With this particular arrangement the maximum detectable velocity possible was approximately 15 feet per second given our electronic limitations.

Air Jets and Seed Generator

The generation of scatter centers was accomplished with a Schrader Lubricator Model No. 3586-1000. An oily liquid commonly know as "fog juice" was used with the atomizer. Located upstream of the atomizer was

a filter and water trap to insure the quality of the scatter centers produced by the atomizer. Preliminary investigation of the oil droplet size just downstream of the atomizer indicated droplet sizes as large as 250 microns. In order to eliminate particles above an acceptable level a large settling tank was installed downstream of the atomizer. An illustration of these components and their relative positions is shown in Figure 6. The air and oil droplet mixture entered the settling tank at the top and exited from another port also located at the top of the tank. In this way, the larger particles would settle out leaving only the smaller particles as scatter centers. This is desirable because the larger particles cannot follow local accelerations of the fluid and would thus provide incorrect data on the velocity of the fluid. Downstream of the settling tank were the jet exits. Two jet exit diameters were chosen, 2.05" and 0.625", which provided information in both the higher and lower velocity ranges. A consequence of the increased velocities with the smaller diameter jet was an alteration of the atomization process so that somewhat smaller droplets were generated at the greater velocities. Thus the ability to slightly vary particle size and hence the light scattering properties associated with smaller particles was obtained through velocity changes in the atomization process.

Determination of Droplet Size

Several methods are available for determining particle size of various materials. The method used for this study was that of measuring droplet size with a microscope. In this method, a common microscope slide that has been thoroughly cleansed is injected into the

airstream containing the oil droplets. After a few seconds of exposure the slide was removed and placed in a container to prevent contamination until the droplets were sized. This last step was found not to be necessary because the oil droplets were clearly distinguishable from other contaminents. It is often necessary to precoat slides to provide a permanent impression. However, May (6) points out that for liquids of low volatility it is unnecessary to precoat the slides. Consequently, because of the oily nature of the liquid drops the slides were not precoated.

Samples were taken at every velocity where light intensity data was recorded. The sizing was accomplished through the use of a Unitron MMU No. 33651 microscope with a Cooke, A.E.I. Image Splitting Eyepiece. Using the 10x objective, sizing accuracies to within 1 micron are possible. The results of the samples taken are shown in Figure 7 (a) thru (d). It should be noted that the data in Figure 7 represents uncorrected particle sizes. That is, no correction has been made for the flattening of the droplet upon impact with the slide. Though May (7) is sketchy in his treatment of the effect that velocity plays in the flattening process, he does provide guidelines for correction factors of various liquids. For a medium weight oil, May found that the ratio of true droplet diameter to that measured on a slide coated with magnesium oxide is 0.834. While not being a substantially significant figure, there are limitations to its applicability. The above figure can be applied to particles greater than 15 to 20 microns, but below 10 microns it is unreliable. However, since most of the particles measured in this study were in the 10-15 micron range the above mentioned correction factor was not used.

Data Acquisition

Figure 8 is a schematic diagram of the various components required for signal processing. The Doppler signal from the photo tube was first applied across a load resistor of 790 ohms in parallel with the input impedance of the oscilloscope. The signal was then amplified 40 db by a Hewlett-Packard Model 450A amplifier. A Multimetrics Model AF120 filter then filtered out the dc excursion or pedestal voltage of the signal. The remaining Doppler signal amplitude was then observed on a Tektronix Type 564 storage oscilloscope and recorded. By knowing the signal voltage and input resistance, the photomultiplier tube output current and hence, the intensity of light falling on the photo tube can be determined. This intensity can then be compared with theoretical prediction by knowing the intensity at the scatter volume, the scattering function for the given optical arrangement and the scatter centers.

CHAPTER III

DETERMINATION OF THEORETICAL PREDICTION FOR LIGHT SCATTERING

In choosing a laser for LDA work, special attention should be paid to the particular scattering function for determining scattered light intensity. Letting I_o be the intensity of the light at the scatter volume then the intensity of the scattered light falling on the PM tube varies inversely as the distance squared. Thus

$$I_s \propto I_o \frac{1}{r^2}$$

where I_o = intensity of light at the scatter volume, watts/mm^2

I_s = intensity of scattered light falling on collection lens, watts/mm^2

r = distance between scatter volume and collection lens

It should be noted that I_s is composed of two parts, that part with the electric field polarized perpendicular to the plane defined by the incident beam and the scattered light ray and that part parallel to the plane. The determination of I_s is not easily accomplished. To begin with, the particular LDA used in this work relied upon scattered light from only one scatter center at a time. This is an advantage in that the needed scattering function, I_s, only involves one particle. Another simplification can be made by assuming that the particle is spherical in shape. If it is further assumed that the particle, is homogeneous and the fluid medium is also homogeneous

then we are able to apply the theory of Mie to the scattering problem. Mie published a paper in 1908 in which he obtained a scattering function for homogeneous spheres of various diameters and compositions. A good derivation of Mie's theory and equations can be found in Born and Wolf (8) and consequently only the final relationships are given here,

$$I_{s\parallel} = \frac{\lambda^2}{4\pi^2 r^2}\left|\sum_{\ell=1}^{\infty}(-i)^{\ell}\left({}^{e}B_{\ell}\,P_{\ell}^{(1)\prime}(\cos\theta)\sin\theta - {}^{m}B_{\ell}\frac{P_{\ell}^{(1)}(\cos\theta)}{\sin\theta}\right)\right|^2$$

$$I_{s\perp} = \frac{\lambda^2}{4\pi^2 r^2}\left|\sum_{\ell=1}^{\infty}(-i)^{\ell}\left({}^{e}B_{\ell}\frac{P_{\ell}^{(1)}(\cos\theta)}{\sin\theta} - {}^{m}B_{\ell}\,P_{\ell}^{(1)\prime}(\cos\theta)\sin\theta\right)\right|^2$$

where $P_{\ell}^{(1)}(\cos\theta)$ = associated Legendre Polynomials and their derivatives

${}^{e}B_{\ell}$ and ${}^{m}B_{\ell}$ = amplitude functions based on refractive index and particle size

Solving for $I_{s\parallel}$ and $I_{s\perp}$ is a tedious task that can be lessened by using tabulated values of Legendre Polynomials and amplitude functions. The difficulty in solving for I_s involves determining the amplitude functions for a large size parameter, α, and a high index of refraction, m. Most tabulated values concern themselves with size parameters up to approximately 30 and indices of refraction up to 1.33. An excellent source of light scattering functions for large size parameters and various indices of refraction can be found in Penndorf and Goldberg (9).

For small scatter centers, those particles whose diameter is less than or equal to the wavelength of light, the following expression for the intensity of scattered light as given by van de Hulst (4) is

$$I_s = \frac{I_o}{k^2 r^2}\,F(\alpha, \theta, m)$$

where I_o = light intensity at scatter volume, watts/mm^2

k = wave number, $k = 2\pi/\lambda$

r = distance between scatter volume and collection lens

$F(\alpha, \theta, m)$ = amplitude scattering function

α = particle size parameter, $\alpha = \pi d/\lambda$

m = index of refraction

θ = viewing angle

With the function $F(\alpha, \theta, m)$ known then the ratio of I_s/I_o can be determined for particles whose diameter is on the order of the wavelength of light.

But now, consider scattering from a particle whose diameter is much greater than the wavelength of light, (i.e. geometrical scattering). This is much simpler mathematically than Mie scattering as there are no involved mathematical equations. In geometrical scattering only light reflected from an incremental projected area on the particle will strike the collection lens. The particulars of solving for the projected area, A_s can be found in Appendix B.

Now, with a known laser power and the physical dimensions of the laser beam, the intensity of the probe volume and its cross-sectional area can be determined. Thus the intensity at the scatter volume is known to be, $I_o = P_o/A_o$

where I_o = intensity at scatter volume in watts/mm^2

P_o = power at scatter volume in watts

A_o = cross-sectional area of scatter volume in mm^2

Thus the power of the light scattered by the particle for 100% reflectance is given by

$$P_s = I_o A_s$$

where P_s = power of scattered light in watts

A_s = projected surface area on particle scattering light to the collection lens in mm^2

Hence the intensity of scattered light at the collection lens is

$$I_{s,Lens} = P_s/A_{Lens} = I_o \frac{A_s}{A_{Lens}}$$

where $I_{s,Lens}$ = intensity at collection lens, watts/mm^2

A_{Lens} = projected area of collection lens, mm^2

If it is now considered that the particle does not reflect 100% of the light striking it but only an amount equal to

$$\rho = (m-1/m+1)^2$$

where ρ = ratio of reflected light to incident light

m = index of refraction

then

$$I_{s,Lens} = \rho I_o \frac{A_s}{A_{Lens}}$$

It should be noted at this point that in calculating ρ a factor of 1.5 was used to account for light transmitted into the oil droplet and then reflected back from the opposite surface.

The index of refraction considered is only for real indices of refraction since it was assumed that there was no absorption by the particle.

Consider now that the theoretical light intensities can be calculated given the set of parameters as follows:

1) Intensity of light at scatter volume
2) Angle of collection lens with respect to incident light
3) Size of scattering particle
4) Index of refraction of scattering particle or its reflectance
5) Scattering distance

All that remains now is to be able to convert the voltage recorded on the oscilloscope into light intensity or visa versa. This is

accomplished through the photo tube specifications and an analysis of the amplification factors in the electronics used.

For the electronics in this work, the conversion is approximately 1.65×10^{-11} watt (of light)/mvolt. The details of this calculation can be found in Appendix C. It is worth noting at this point the importance of selecting the proper photo tube for the wavelength of light under consideration. For example, with a wavelength of 6328Å the RCA 7326 Photomultiplier tube has a relative sensitivity of 40%, which translates into a published luminous sensitivity of 1.3 amp/lumen at 1500 volts dc excitation voltage which is minimum sensitivity. However, if the wavelength had been chosen to correspond with that of maximum relative sensitivity, λ = 4200Å, then a luminous sensitivity of 30 amp/lumen at 1500 volt dc excitation voltage could have been realized which would have the same effect as increasing the laser power. Consequently care should be observed in the selection of the photo tube and the laser.

Another variable of importance concerns the collection angle. Prior knowledge of the scattered light intensity for various collection angles would also go a long way toward effectively increasing laser power. Van de Hulst offers a few plots of intensity vs angle for various indices of refraction and particle size for Mie scattering.

CHAPTER IV

EXPERIMENTAL DATA

The experimental data was taken with a laser anemometer operating in the backscatter mode with two different optical arrangements. Scattering distances of 7 3/4" and 15" were used with the particle size of the scatter centers remaining essentially the same. Data was recorded with an RCA No. 7326 photomultiplier tube operating under two different excitation voltages, 1400 and 1500 volt dc, for each optical arrangement. In all 1,008 realizations were recorded with 296 for the first optical system and 712 for the second.

The data was recorded on a Tektronix No. 564 Storage Oscilloscope. Peak to peak bandpass filtered voltage amplitudes were then noted and recorded. Figure 9 represents a sample of the data taken from optical system number 1 for the smaller jet diameter with V_{excite} = 1400 volt dc. There were a few signals as high as 80 to 120 mvolts (see Figure 10), but the average signal for this ensemble of data is 37.4 mvolts.

No attempt was made to determine the amount of light absorbed by the sending and collecting lenses as the amount was considered negligible. The losses at the reflective coating of the beam splitter were taken into account because they were of considerable magnitude i.e. 40% of the incident light. The average signal strength and number of realizations from the two optical arrangements and excitation

voltages can be found in this chapter and the conversion from photomultiplier tube output voltage to watts of light can be found in Appendix C.

TABLE I

AVERAGE SIGNAL STRENGTH

OPTICAL ARRANGEMENT	EXCITATION VOLTAGE (volts)	NUMBER OF REALIZATIONS	AVERAGE SIGNAL STRENGTH	
			OUTPUT VOLTAGE mvolts	POWER OF LIGHT x 10^{-11} watts
No. 1	1400	169	37.396	35.713
No. 1	1500	127	47.464	78.553
No. 2	1400	208	30.913	29.522
No. 2	1500	504	49.13	81.31

As can be seen from Table I, there are no significant differences in the two signal strengths for each optical system and corresponding excitation voltage for the same average particle size of 15μm.

Since the second optical system's scattering distance is much shorter than the first, the solid angle of scattered light collected is greater by the $(1/r^2)$ factor. Thus one would expect the intensities and photodetector outputs to be increased by a factor of 3.7. However, the experiments performed do not indicate such an increase in the Doppler frequency range. Consequently, it is reasonable to assume that the mismatch of particle size (15μm) compared with fringe spacing (2μm) in the second optical system is the reason for the discrepancy. This is in agreement with Durst and Whitelaw (5) on optimization of particle size.

Comparison of Theory with Experiment

In comparing theory with experiment recall first that two types of light scattering were considered (1) Geometrical scattering and (2) Mie scattering. Table II represents a summary of the normalized scattered light intensities for the various types of scattering and optical configurations used in this study. Included also are the experimental values for each optical system and their respective excitation voltages. A review of Appendices B, D, and E indicates how these values were determined.

TABLE II

NORMALIZED SCATTERED LIGHT INTENSITIES	
Theoretical Geometrical Scattering - 15μm Particle	
$\frac{I_s}{I_o}\Big\vert_{SYS.1}$	$= 6.718 \times 10^{-12}$ @ 20 backscatter
$\frac{I_s}{I_o}\Big\vert_{SYS.2}$	$= 2.18 \times 10^{-9}$ @ 40 backscatter
Theoretical Mie Scattering - 1μm Particle	
$\frac{I_s}{I_o}\Big\vert_{SYS.1}$	$= 56 \times 10^{-12}$ @ 20 backscatter
$\frac{I_s}{I_o}\Big\vert_{SYS.2}$	$= 9.4 \times 10^{-12}$ @ 40 backscatter
Experimental Geometrical Scattering - 15μm Particle	
$V_{Excite} = 1400$ vdc $I_s/I_o \vert$ SYS.1	$= .742 \times 10^{-12}$ @20 backscatter
$V_{Excite} = 1500$ vdc $I_s/I_o \vert$ SYS.1	$= 1.63 \times 10^{-12}$
$V_{Excite} = 1400$ vdc $I_s/I_o \vert$ SYS.2	$= .984 \times 10^{-13}$ @40 backscatter
$V_{Excite} = 1500$ vdc $I_s/I_o \vert$ SYS.2	$= 2.71 \times 10^{-13}$

In comparing experiment with theory for the first optical system there is reasonable agreement. The experimental output should be lower than theoretical prediction since such optical components as the laser, polarization rotators and lenses have losses which have not been accounted for. The pinhole in front of the photomultiplier tube blocked a large portion of collected light that never reached the photomultiplier since a relatively large "halo" of light was observed around it. It is also unlikely that the photomultiplier tube was performing up to specifications after being exposed to room lights on several occasions.

Agreement between experiment and simplified theoretical prediction was not even close for the second optical system. The cause of this is most certainly that the particle was significantly larger than the fringe spacing such that the simplified theory should not apply.

It should also be noted from Table II that if a reduction in particle size from 15μm to 1μm was being considered, then the laser power would have to be increased at least one order of magnitude depending on the optical configuration used. Sample calculations for determining laser power requirements can be found in Appendix F.

Particle Optimization

Consider now the matching of the particle size with the optical configuration for the dual scatter LDA. It seems reasonable to say for the same set of fringes, that if the ratio of particle diameter to fringe width is say 5, then the peak to peak voltage of the ac component, i.e. the Doppler signal, of intensity observed by the photo tube will be less than the peak to peak voltage when the ratio of

particle diameter to fringe width is 1 (see Figure 11). Consider two particles entering two identical sets of fringes. The first particle's diameter is equal to the fringe width and the second particle's diameter is 5 times larger than a fringe width. Figure 12 represents the various stages of light scattering as the two particles enter light and dark fringes and pass through them. As can be seen from Figure 12, there are certain periods when the smaller particle is entirely in a light fringe and then a dark one. This, of course, corresponds to periods when the photo tube is receiving light and then receives essentially none at all.

Note, however, that the larger particle at no time is ever totally enclosed by a dark fringe and hence is always scattering some light. Figure 11 represents the scattered light intensity as seen by the photo tube as the two particles enter the probe volume and fringes. It can be seen that even though the intensity of each light fringe is steadily increasing due to the Gaussian distribution of the laser beam that the amplitude differences of the larger particle do not increase to the extent of those of the smaller particle. This is due to the fact that the photo tube has had a chance to return to zero when the smaller particle is in a dark fringe. Thus the peak to peak voltage for the smaller particle will be larger than for the larger particle.

Consequently, the larger differences will produce greater amplitudes for triggering the electronics which is of great importance when the signal is only slightly larger than the noise in the electronics.

CHAPTER V

SUMMARY AND CONCLUSIONS

Summary

The primary objective of this study was to determine the laser power requirements for a backscatter laser Doppler anemometer given a specific set of parameters. A secondary objective was to obtain experimental evidence concerning the matching of particle size to fringe width for system optimization. This was accomplished by measuring the intensity of scattered light from 15μm particles in two different optical configurations.

There was good agreement between theory and experiment for geometrical scattering from a 15μm particle when the fringe width was also 15μm. Agreement was poor, however, when fringe width was reduced to 2μm and the particle size remained 15μm. This is attributed primarily to the mismatching of particle size and fringe width. It was further determined that if careful attention was not paid to the ratio of particle size to fringe width that at the very least the light scattered in the Doppler frequency range would be of minimum intensity. This was borne out by the experimental data in which two scattering distances produced signals of almost equal intensity even though the scattering distances differed by almost a factor of two. Finally, it was also found, that for laser anemometry in the backscatter mode, that a 5 mwatt laser could be taken as the lower limit in laser power for 15μm particles

Conclusions

From the study performed the following conclusions may be drawn:

1) There was good agreement between theory and experiment for the first optical system with a 15μm particle and fringe width. Agreement was poor when the fringe width was reduced to 2μm for a 15μm particle.
2) If a reduction in particle size from 15μm to 1μm was required then at the very least the laser power would have to be increased by at least one order of magnitude.
3) In designing a laser Doppler anemometer system the particle size should not exceed the fringe width less the intensity of scattered light be minimized.

BIBLIOGRAPHY

(1) Meyers, J. F. "Investigation of Basic Parameters for the Application of a Laser Doppler Velocimeter." AIAA Paper No. 71-288, March, 1971.

(2) Lennert, A.E., Brayton, D.B., Crosswy, F.L., et al. "Summary Report of the Development of a Laser Velocimeter to be Used in AEDC Wind Tunnels." AEDC-TR-70-101, July, 1970.

(3) Donohue, G.L. "The Effect of a Dilute, Drag-Reducing Macromolecular Solution on the Turbulent Bursting Process." (Ph.D. Thesis, Oklahoma State University, May, 1972).

(4) van de Hulst, H.C. Light Scattering by Small Particles. John Wiley and Sons, New York, (1957).

(5) Durst, F. and Whitelaw, J.H. "Theoretical Considerations of Significance to the Design of Optical Anemometers." Paper presented at the AICHE-ASME Heat Transfer Conference, Denver, Colorado, August, 1972.

(6) May, K.R. "Cascade Impactor: An Instrument for Sampling Coarse Aerosols." Journal of Scientific Instruments. Vol. 22, 1945.

(7) May, K.R. "The Measurement of Airborne Droplets by the Magnesium Oxide Method." Journal of Scientific Instruments. Vol. 27, 1950.

(8) Born, M. and Wolf, E. Principles of Optics. New York: The Macmillan Co., 1964.

(9) Penndorf, R. and Goldberg, B. "New Tables of Mie Scattering Functions for Spherical Particles, Part 4: Values of Amplitude Functions a_m and b_m for Refractive Indes m = 1.486 and for Size Parameters α = 0(0.1)30." Geophysical Research Papers No. 45, AFCRC-TR-56-204, ASTIA Document No. AD-98770, March, 1956.

(10) Brayton, D.B. and Goethert, W.H. "A New Dual-Scatter Laser Doppler-shift Velocity Measuring Technique." ISA Transactions, Vol. 10, No. 1, 1971.

APPENDIX A

DETERMINATION OF FRINGE WIDTH

The fringe width determination for the work reported herein was taken from Brayton and Goethert's (10) calculations. The fringe spacing is given by the following relation

$$L = \lambda/2\sin(\beta/2)$$

where (see Figure 1)

L = distance between fringes

λ = wavelength of light

β = included angle formed by the two incident beams

For the two optical systems used, we have for

System No. 1:

$$L = \frac{.6328 \times 10^{-3}\text{mm}}{2 \times \sin 1.2^\circ} = 15.14 \times 10^{-3}\text{mm} \approx 15\mu\text{m}$$

and for System No. 2:

$$L = \frac{.6328 \times 10^{-3}\text{mm}}{2 \times \sin 8.21^\circ} = 2.21 \times 10^{-3}\text{mm} \approx 2\mu\text{m}$$

APPENDIX B

GEOMETRICAL SCATTERING

Optical System Number 1

In the figure below the various pertinent dimensions are given for Optical System No. 1. These parameters are necessary in determining the intensity of light scatter by using geometrical scattering theory.

$$(\Theta max - \Theta min) = 2 \times \tan^{-1}\left[\frac{1/2(4.8'')}{15''}\right] = 18.16°$$

$$\Theta max = 29.08° \text{ and } \Theta min = 10.92°$$

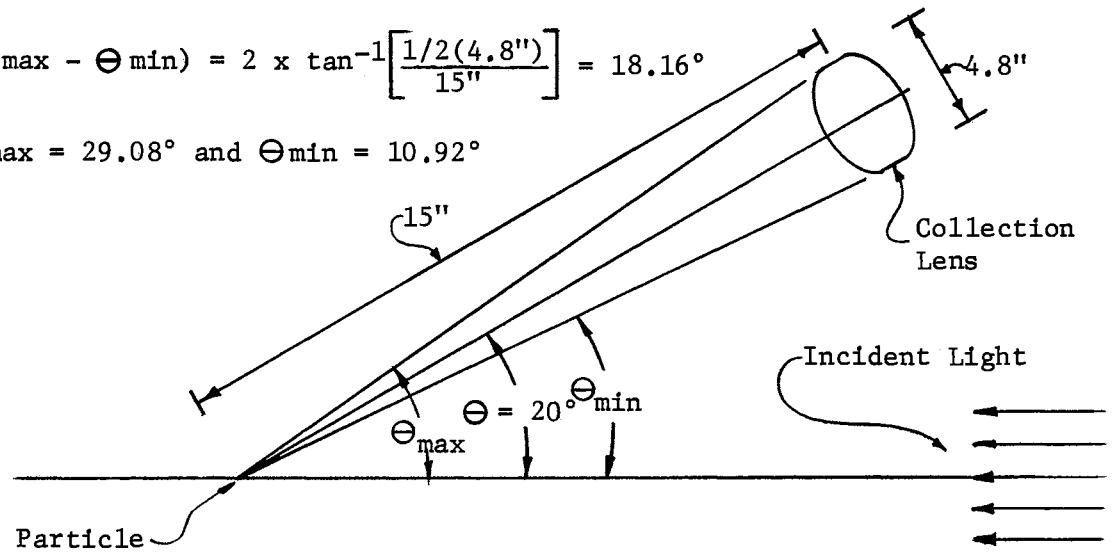

The figures that follow show these angles located on the particle in plan and elevation.

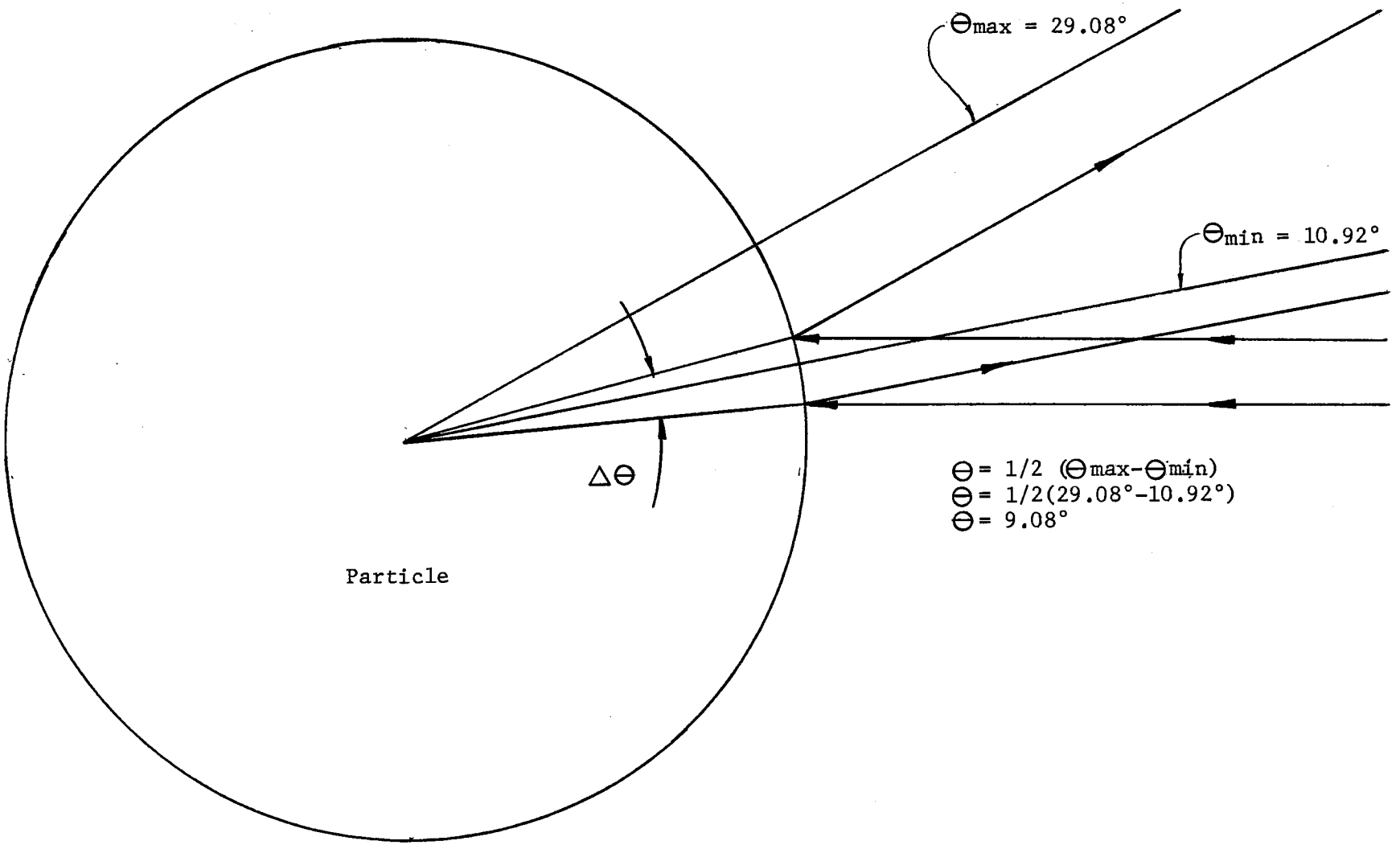

Plan: Location of Collection Angle on Particle for Optical System Number 1

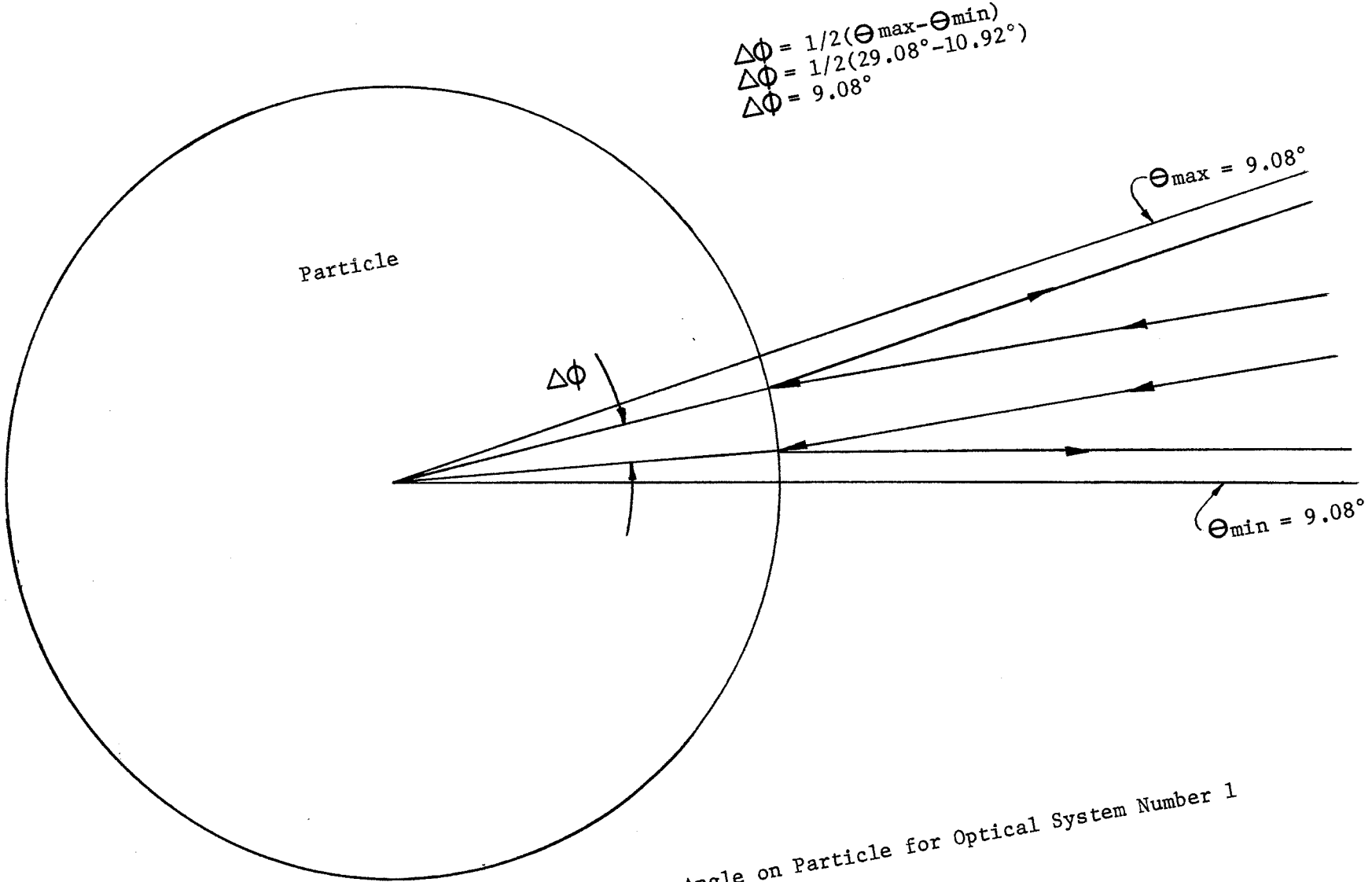

Elevation: Location of Collection Angle on Particle for Optical System Number 1

The shaded region in the figure below represents the area on the particle that will scatter light to the collection lens.

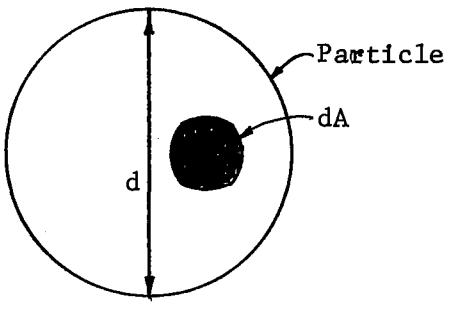

View From Incident Beams - Optical System No. 1

Now, the area of the shaded region above is given by

$$dA = \left[\frac{d}{2}\right]^2 d\Theta\, d\phi \approx \left[\frac{d}{2}\right]^2 \Delta\Theta\, \Delta\phi$$

where d = particle diameter

$\Delta\Theta$ = angle in horizontal plane

$\Delta\phi$ = angle in vertical plane

Thus for a 15μ particle with $\Delta\Theta = 9.08°$ and $\Delta\phi = 9.08°$

$$dA = \left[\frac{15}{2}\right]^2 \left(\frac{9.08}{57.3}\right) \left(\frac{9.08}{57.3}\right)$$

$$dA = 1.415 \text{ (microns)}^2 = 1.415 \times 10^{-12} m^2$$

where 1 radian = 57.3°

The projected area of dA can be found from

$$dA_{proj} = A_s = dA \cos \frac{\Theta_{max}}{2}$$

and upon substitution,

$$A_s = (1.415 \times 10^{-12} m^2)\ (\cos \frac{29.08°}{2})$$

$$A_s = 1.37 \times 10^{-12} m^2 = 1.37(\mu m)^2$$

This represents the area on the particle that will scatter light to the collection lens for Optical System Number 1.

Optical System Number 2

The figure below contains the various pertinent dimensions for determining the intensity of scattered light for Optical System No. 2.

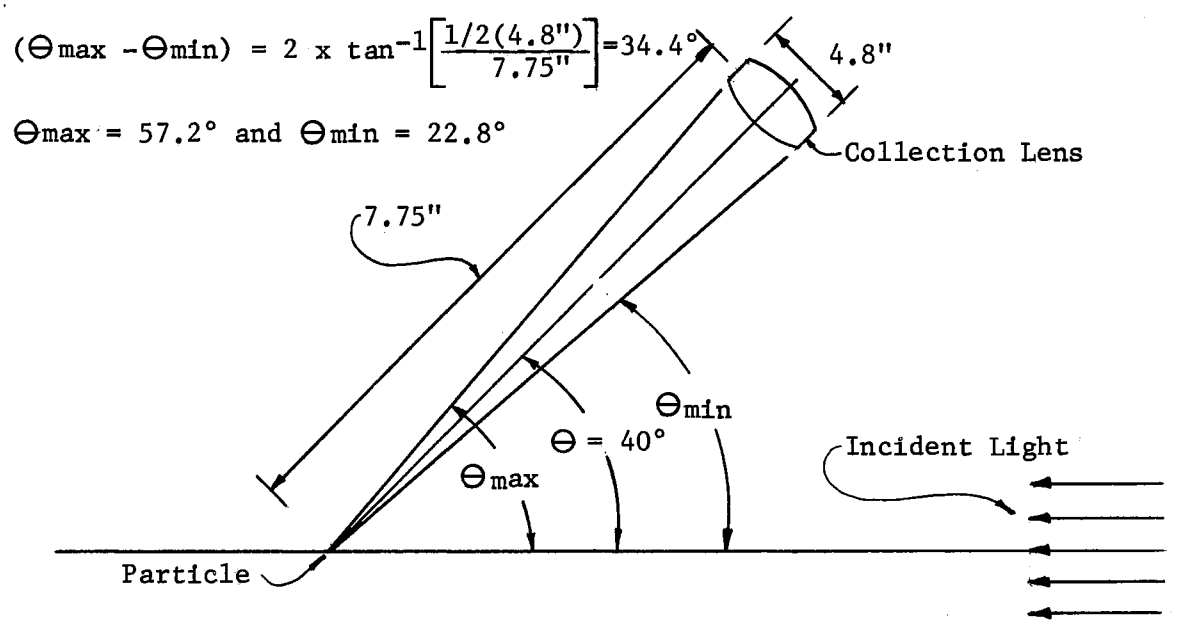

The figures that follow show these angles located on the particle in plan and elevation.

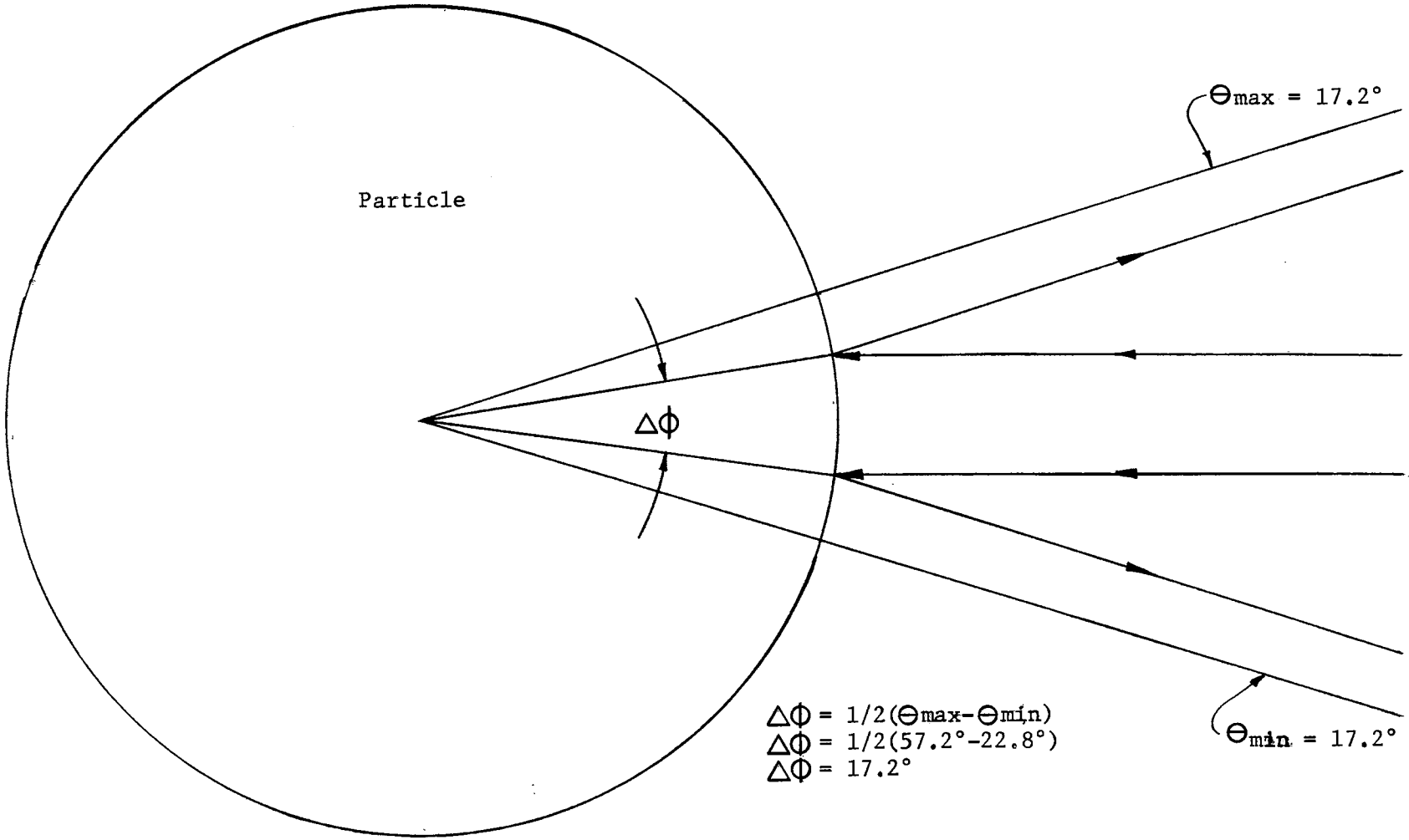

Elevation: Location of Collection Angle on Particle for Optical System Number 2

The shaded region in the figure below represents the area on the particle that will scatter light to the collection lens.

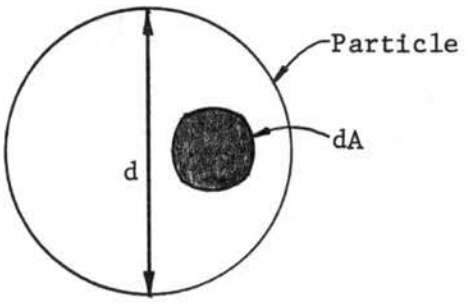

View From Incident Beams - Optical System No. 2

The area of the shaded region above is given by

$$dA = \left[\frac{d}{2}\right]^2 d\theta\, d\phi \simeq \left[\frac{d}{2}\right]^2 \Delta\theta \Delta\phi$$

where

d = particle diameter

$\Delta\Theta$ = angle in horizontal plane

$\Delta\phi$ = angle in vertical plan

Thus for a 15μ particle with $\Delta\Theta = 17.2°$ and $\Delta\phi = 17.2°$

$$dA = \left[\frac{15}{2}\right]^2 \left(\frac{17.2}{57.3}\right) \left(\frac{17.2}{57.3}\right)$$

$$dA = 5.06 \times 10^{-12} m^2 = 5.06 \text{ (microns)}^2$$

where

1 radian = 57.3°

The projected area of dA can be found from

$$A_s = dA \cos \frac{\Theta max}{2}$$

and upon substitution,

$$A_s = (5.06 \times 10^{-12} m^2) \times (\cos \frac{57.2°}{2})$$

$$A_s = 4.45 \times 10^{-12} m^2 = 4.45 \ (\mu m)^2$$

This projected area on the particle represents the area that will scatter light to the collection lens for Optical System Number 2.

Light Intensity at Probe Volume

Knowing the scattering area of the particle, the intensity of light at the probe volume needs to be determined. Knowing that the beam splitter absorbs 40% of the incident light then each beam is 30% of the original intensity With the power of light at the laser being 5 mwatts and from the laser specifications the beam diameter is .65mm at the $1/e^2$ points then the approximate power at the probe volume can be calculated as follows:

Knowing that the magnitude of the electric vector is equal to the square root of the magnitude of the intensity we have at the laser

$$E_{Laser} = \sqrt{\frac{P_{Laser}}{A_{Laser\ beam}}} = \sqrt{I_{Laser}}$$

or

$$E_{Laser} = \sqrt{\frac{5 \times 10^{-3} watts}{.332 mm^2}} = 1.229 \times 10^{-1} (watts/mm^2)^{\frac{1}{2}}$$

The electric vector at the probe volume per beam is

$$\frac{E_o}{Beam} = 30\% \times 1.229 \times 10^{-1} = .3687 \times 10^{-1} (watts/mm^2)^{\frac{1}{2}}$$

Considering both beams, we have that the electric vector at the probe volume is

$$E_o = 2 \times .3687 \times 10^{-1} = .7374 \times 10^{-1} \text{ (watts/mm}^2)^{\frac{1}{2}}$$

Then the intensity at the probe volume is

$$I_o = E_o^2$$

or

$$I_o = (.7374 \times 10^{-1})^2 = 5.437 \times 10^{-3} \text{ watts/mm}^2$$

Multiplying by the beam area at the laser yields the power at the probe volume to be approximately (multiplying by the beam area at the laser at this point is not precisely correct but it does provide a reasonable approximation):

$$P_o = \frac{5.437 \times 10^{-3} \text{ watts} \times .332\text{mm}^2}{\text{mm}^2}$$

$$P_o = 1.8 \times 10^{-3} \text{ watts}$$

Cross-sectional Area of Probe Volume

From Brayton and Goethert (10) the probe volume diameter for both systems can be determined from the following relation,

$$2b_o = \left(\frac{4f_L \lambda}{\pi\ 2b}\right) \Big/ \cos(\beta/2)$$

where $2b_o$ = diameter of probe volume

f_L = focal length of sending lens

$2b$ = beam diameter at lens

λ = wavelength of light

$\beta/2$ = incident beam's half angle ($\cos\beta/2 \approx 1.0$)

For Optical System 1

$$2b_o = \frac{4 \times 15'' \times 6.328 \times 10^{-4}\text{mm} \times 25.4\text{mm}}{3.14 \times 2 \times .65\text{mm} \times \text{inch}}$$

$$2b_o = .236\text{mm}$$

and for Optical System 2

$$2b_o = \frac{4 \times 6'' \times 6.328 \times 10^{-4}\text{mm} \times 25.4\text{mm}}{3.14 \times 2 \times .65\text{mm} \times \text{inch}}$$

$$2b_o = .0944\text{mm}$$

For simplicity assume the cross-sectional area to be a circle then the cross-sectional area of the probe volume becomes

$$A_o = \frac{\pi d^2}{4}$$

For Optical System 1

$$A_o = \frac{3.14 \times (.236\text{mm})^2}{4} = .0437\text{mm}^2$$

For Optical System 2

$$A_o = \frac{3.14 \times (.0944\text{mm})^2}{4} = .007\text{mm}^2$$

Thus if we divide the power at the probe volume for each system by its respective cross-sectional area we will have the intensity in watts of light/mm^2 or

$$I_o = \frac{P_o}{A_o}$$

Optical System No. 1

$$I_o = \frac{1.8 \times 10^{-3}}{.0437} = 41.19 \times 10^{-3} \text{ watt/mm}^2$$

Optical System No. 2

$$I_o = \frac{1.8 \times 10^{-3}}{.007} = 257.14 \times 10^{-3} \text{ watt/mm}^2$$

Scattered Light Intensity for 100% Reflectance

To determine the power of light scattered to the collection lens for 100% reflectance, simply multiply the intensity at the probe volume by the scattering area for each respective system

$$P_s = I_o A_s$$

For Optical System No. 1

$$P_s = (41.19 \times 10^{-3} \frac{watt}{mm^2})\ (1.37 \times 10^{-6} mm^2)$$

$$P_s = 5.64 \times 10^{-8} \text{ watts}$$

For Optical System No. 2

$$P_s = 2.57 \times 10^{-1} \frac{watt}{mm^2})\ (4.45 \times 10^{-6} mm^2)$$

$$P_s = 1.14 \times 10^{-6} \text{ watts}$$

Considering now the intensity of light per unit area we have that the collection lens has a projected surface area of

$$A_{lens} = \frac{\pi d^2}{4}$$

or

$$A_{lens} = \frac{3.14 \times (4.8'')^2 \times (25.4mm)^2}{4 \times in^2}$$

$$A_{lens} = 11{,}674.5 \text{ mm}^2$$

Thus the intensity of scattered light, for 100% reflectance at the lens and that of the photo tube is

For Optical System No. 1

$$I_s = \frac{5.64.10^{-8} \text{ watt}}{11{,}674.5mm^2}$$

$$I_s = 4.83 \times 10^{-12} \text{ watt/mm}^2$$

For Optical System No. 2

$$I_s = \frac{1.14 \times 10^{-6} \text{ watt}}{11{,}674.5mm^2}$$

Actual Scattered Light Intensity

Consider now the actual intensity of scattered light from an oil droplet with index of refraction m = 1.486. The reflectance, ρ , for

a real index of refraction is given by,

$$\rho = (m-1/m+1)^2$$

or

$$\rho = (1.486-1/1.486+1)^2 = .0382$$

In addition, consider the light that is transmitted into the oil droplet and then reflects from the inside surface we have

$$\rho = 1.5 \times .0382 = .0573$$

Thus the actual intensity of scattered light at the lens becomes

Optical System No. 1

$$I_s = (.0573) \times (4.83 \times 10^{-12}) \text{ watts/mm}^2$$

$$I_s = 2.767 \times 10^{-13} \text{ watt/mm}^2$$

Optical System No. 2

$$I_s = (.0573) \times (9.79 \times 10^{-9}) \text{ watts/mm}^2$$

$$I_s = 5.61 \times 10^{-10} \text{ watt/mm}^2$$

Finally upon normalization we have for geometrical scattering from a 15 μm particle

Optical System No. 1

$$\frac{I_s}{I_o} = \frac{2.767 \times 10^{-13}}{41.19 \times 10^{-3}} = 6.718 \times 10^{-12}$$

Optical System No. 2

$$\frac{I_s}{I_o} = \frac{5.61 \times 10^{-10}}{275.14 \times 10^{-3}} = 21.817 \times 10^{-10}$$

APPENDIX C

CONVERSION OF WATTS OF LIGHT POWER TO OUTPUT VOLTAGE OF PHOTO DETECTOR

From the characteristics curves for the photomultiplier tube with a constant excitation voltage an average luminous sensitivity can be determined.

For minimum sensitivity the ratio of output current to incident luminous flux is 1.3 and .75 for constant excitation voltage of 1500 volts dc and 1400 volts dc respectively. The minimum sensitivity curve was chosen because the relative sensitivity of the photo tube was only 40%.

The various amplification factors of the electronics were determined experimentally and found to have the following values,

Amplifier @ 40 db and 500 kHz input

$$\text{Amplification} = F_{amp} = 200$$

Bandpass filter @ 1 Meghz

$$\text{Amplification} = F_{filter} = .8$$

With an oscilloscope input capacitance of 47$\mu\mu$f the input impedence can be determined from $Z_{scope} = 1/2\pi fC$

where f = signal frequency

C = input capacitance

For an average frequency of 500 kHz the oscilloscope impedence becomes

$$Z_{scope} = \frac{1}{2 \times 3.14 \times 500 \times 10^{+3} \times 47 \times 10^{-12}} = 6800\Omega$$

Together with a load resistor of 790Ω the impedence becomes,

$$\frac{1}{R_T} = \frac{1}{6800} + \frac{1}{790} \Longrightarrow R_T = 700\Omega$$

Finally, with the conversion of watts of light to lumens the necessary conversion factors are obtained. For a wavelength of 556Å, 1 watt = 621 lumens.

Sample calculation:

For a signal of 1 mv appearing on the storage oscilloscope the potential at the input to the amplifier can be found by

$$E_{\substack{amp \\ input}} = \frac{1mv}{\text{Amplification factors}} = \frac{1mv}{(200)(.8)}$$

$$E_{\substack{amp \\ input}} = .625 \times 10^{-2} \text{ mvolts}$$

But this is the same as the potential seen by the dual trace oscilloscope whose input impedence is in parallel with the load resistor of 790Ω.

Thus the current leaving the PM tube can be found from Ohm's law.

$$i = E/R = .625 \times 10^{-2} \text{ mvolts}/790\Omega$$

$$i = .791 \times 10^{-8} \text{ amp}$$

From the photomultiplier tube characteristics curve at minimum sensitivity this current is converted into light power in lumens,

at 1500 vdc,

$$P = .791 \text{ amp} \times 1.3 \frac{\text{lumens}}{\text{amp}} \times 10^{-8}$$

$$\text{Power} = P = 1.028 \times 10^{-8} \text{ lumens}$$

and at 1400 vdc,

$$P = .791 \text{ amp} \times .75 \frac{\text{lumens}}{\text{amp}} \times 10^{-8}$$

$$\text{Power} = P = .593 \times 10^{-8} \text{ lumens}$$

Now converting this into watts of light,

at 1500 vdc

$$P = 1.028 \times 10^{-8} \text{ lumens} \div .621 \times 10^{3} \text{ lumen/watt}$$

$$P = 1.655 \times 10^{-11} \text{ watts}$$

at 1400 vdc,

$$P = .593 \times 10^{-8} \div .621 \times 10^{3} \text{ lumen/watt}$$

$$P = .955 \times 10^{-11} \text{ watts}$$

Thus the conversion for output voltage to Power of light is:

$$1 \text{ mv} = 1.655 \times 10^{-11} \text{ watts @ 1500 vdc}$$

$$1 \text{ mv} = .955 \times 10^{-11} \text{ watts @ 1400 vdc}$$

APPENDIX D

MIE SCATTERING

The following relations were taken from van de Hulst (4) to determine the intensity of scattered light from particles whose diameter is on the order of the wavelength of light. For light that is linearly polarized, $I_s = \frac{I_o}{k^2 r^2} F(\alpha, \Theta, m)$

where I_s = intensity of scatter light, watts/mm^2

I_o = intensity of light at probe volume, watts/mm^2

k = wave number, $k = 2\pi/\lambda$

r = scattering distance from particle to collection lens

$F(\alpha, \Theta, m)$ = appropriate amplitude function

α = size parameter, $\alpha = \pi d/\lambda$

Θ = viewing angle

m = index of refraction of particle

For $\lambda = 6328\text{Å} = .6328 \times 10^{-6}\text{m}$

$$k^2 = \left[(2)(3.14)/(.6328 \times 10^{-6}\text{m})\right]^2$$

$$k^2 = 98.588 \times 10^{12}\text{m}^{-2}$$

For Optical System No. 1 with r = 15" = .381m

$$I_s = \frac{I_o \; F(\alpha, \Theta, m)}{98.588 \times 10^{12}\text{m}^{-2} \times (.381\text{m})^2}$$

$$I_s = 6.99 \times 10^{-14} \; I_o \; F(\alpha, \Theta, m)$$

For Optical System No. 2 with r = 7.75" = .197m

$$I_s = \frac{I_o \; F(\alpha, \theta, m)}{98.588 \times 10^{12} m^{-2} \times (.197m)^2}$$

$$I_s = 26.14 \times 10^{-14} \; I_o \; F(\alpha, \theta, m)$$

The following is data taken from van de Hulst (4) for indices of refraction of 1.55 and 1.33 with the size parameter equal to 5 and several angles of collection. An angle of 0° is considered to be in the opposite direction of the incident radiation and increasing counter clockwise. The diagram below illustrates the coordinate system.

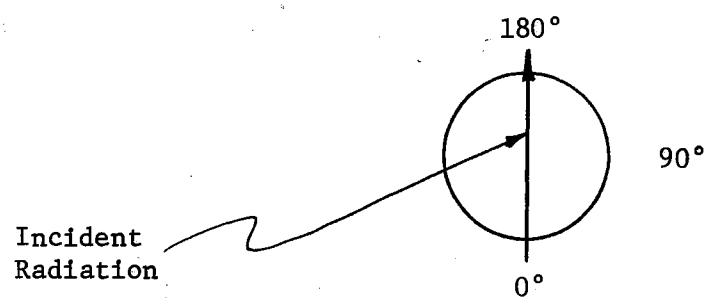

Coordinate System

TABLE III

ANGLE (DEGREES)	AMPLITUDE FUNCTION $F(\alpha, \theta, m)$ INDEX OF REFRACTION	
	m = 1.33	m = 1.55
0°	2.16	27
20°	2.0	2
30°	3.5	5
40°	4.0	9
180°	586	555

If we now substitute the above values into the previously determined relation for I_s for each optical system the intensity of the scattered light can then be determined. The intensities are tabulated below for each system and index of refraction.

TABLE IV

NORMALIZED SCATTERED LIGHT INTENSITIES, m = 1.33

ANGLE (DEGREES)	SINGLE BEAM INTENSITY $\frac{I_s}{I_o} \times 10^{-14}$	ELECTRIC VECTOR $\left(E = \sqrt{I_s/I_o}\right)$ $\sqrt{\frac{I_s}{I_o}} \times 10^{-7}$	ELECTRIC VECTOR FOR 2 BEAMS $2\sqrt{I_s/I_o} \times 10^{-7}$	INTENSITY OF SCATTERED LIGHT $\frac{I_s \times 10^{-14}}{I_o}$
$I_s = 6.99 \times 10^{-14}\ I_o F(\alpha, \theta, m)$			$r = 15''$	
0	15.1	3.89	7.78	60
20	13.98	3.74	7.48	56
30	24.46	4.95	9.9	98
40	27.96	5.29	10.58	112
180	4096.14	64	128	16,384
$I_s = 2.614 \times 10^{-13}\ I_o F(\alpha, \theta, m)$			$r = 7.75''$	
0	56.46	7.5	15	225
20	52.28	7.2	14.4	207
30	91.49	9.5	19	361
40	104.56	10.22	20.44	418
180	15,318.04	123.7	247.4	61,206

TABLE V

NORMALIZED SCATTERED LIGHT INTENSITIES, $m = 1.55$

$I_s = 6.99 \times 10^{-14}\ I_o F(\alpha, \Theta, m)$ $r = 15''$

ANGLE (DEGREES)	SINGLE BEAM INTENSITY $\frac{I_s}{I_o} \times 10^{-14}$	ELECTRIC VECTOR ($E = \sqrt{I_s/I_o}$) $\sqrt{\frac{I_s}{I_o}} \times 10^{-7}$	ELECTRIC VECTOR FOR 2 BEAMS $2\sqrt{\frac{I_s}{I_o}} \times 10^{-7}$	INTENSITY OF SCATTERED LIGHT $\frac{I_s}{I_o} \times 10^{-14}$
0	188.73	13.74	27.48	755
20	13.98	3.74	7.48	56
30	34.95	5.91	11.82	140
40	62.91	7.93	15.86	251
180	3879.45	62.3	124.6	15,525

$I_s = 2.614 \times 10^{-13}\ I_o F(\alpha, \Theta, m)$ $r = 7.75''$

0	705.78	26.6	53.2	2,830
20	52.28	7.23	14.46	209
30	130.7	11.4	22.8	520
40	235.26	15.33	30.66	940
180	14,507.7	120.5	241	58,081

APPENDIX E

DETERMINATION OF AVERAGE SCATTERING INTENSITY

From Table I the following calculations yield the average normalized intensity of scattered light for the two optical configurations.

Optical System 1

$I_o = 4.119 \times 10^{-2}$ watts/mm^2, $A_{Lens} = 11{,}674.5$ mm^2

For $V_{Excite} = 1400$ vdc

$$I_s = \frac{35.713 \times 10^{-11} \text{watts}}{11{,}674.5 \text{ mm}^2} = 3.06 \times 10^{-14} \text{ watts/mm}^2$$

$$\frac{I_s}{I_o} = \frac{3.06 \times 10^{-14}}{4.119 \times 10^{-2}} = 7.42 \times 10^{-13}$$

For $V_{Excite} = 1500$ vdc

$$I_s = \frac{78.553 \times 10^{-11} \text{watts}}{11{,}674.5 \text{mm}^2} = 6.728 \times 10^{-14} \text{ watts/mm}^2$$

$$\frac{I_s}{I_o} = \frac{6.728 \times 10^{-14}}{4.119 \times 10^{-2}} = 1.63 \times 10^{-12}$$

Optical System 2

$I_o = 2.5714 \times 10^{-1}$ watts/mm^2, $A_{Lens} = 11{,}674.5$ mm^2

For $V_{Excite} = 1400$ vdc

$$I_s = \frac{29.522 \times 10^{-11} \text{watts}}{11{,}674.5 \text{mm}^2} = 2.53 \times 10^{-14} \text{watts/mm}^2$$

$$\frac{I_s}{I_o} = \frac{2.53 \times 10^{-14}}{2.5714 \times 10^{-1}} = 9.84 \times 10^{-14}$$

For V_{Excite} = 1500 vdc

$$I_s = \frac{81.31 \times 10^{-11} \text{watts}}{11{,}674.5 \text{mm}^2} = 6.96 \times 10^{-14} \text{watts/mm}^2$$

$$\frac{I_s}{I_o} = \frac{6.96 \times 10^{-14}}{2.57 \times 10^{-1}} = 2.71 \times 10^{-13}$$

APPENDIX F

DETERMINATION OF LASER POWER REQUIREMENTS

EXAMPLE PROBLEM

Given:

1. scattering distance = 15"
2. particle diameter = 1μm
3. index of refraction of particle = 1.55
4. collection angle = 20°
5. signal = 50 mvolts and SNR = 10 (this essentially sets the intensity at the scatter volume)

Find: Laser power required

Procedure:

1. From Appendix C for V_{Excite} = 1500 vdc the conversion from mvolts to watts is 1.65×10^{-11} watts/mvolt.

   Thus a signal of 50 mvolts = 8.25×10^{-10} watts.

2. If the collection lens has an area of 11,674.5mm^2 then the intensity of scattered light collected is

   $$I_s = \frac{8.25 \times 10^{-10}\text{watts}}{11{,}674.5\text{mm}^2} = 7.066 \times 10^{-14} \text{ watts/mm}^2$$

3. From light scattering tables for the given parameters we have $\frac{I_s}{I_o} = 56 \times 10^{-14}$. Thus

   $$I_o = I_s/56 \times 10^{-14} = \frac{7.066 \times 10^{-14}}{56 \times 10^{-14}} = .126 \text{ watt/mm}^2$$

4. Thus the electric field at the probe volume is

$$E_o = \sqrt{I_o} = \sqrt{.126 \text{watts/mm}^2} = 3.55 \times 10^{-1} (\text{watts/mm}^2)^{\frac{1}{2}}$$

and per beam this becomes

$$\frac{E_o}{\text{Beam}} = \frac{3.55 \times 10^{-1}}{2} = 1.775 \times 10^{-1} (\text{watts/mm}^2)^{\frac{1}{2}}$$

If this value represents 30% of the original light (i.e. 40% loss at the reflective coating in the beam splitter) then the electric field at the laser for both beams is

$$E_{Laser} = \frac{2 \times 1.775 \times 10^{-1}}{.3} = 1.183 (\text{watts/mm}^2)^{\frac{1}{2}}$$

Thus the intensity at the laser is

$$I_{Laser} = E^2_{Laser} = (1.183)^2 = 1.4 \text{ watt/mm}^2$$

5. Thus if the cross-sectional area of the laser beam is $.0437 \text{mm}^2$ then the laser power required is

$$P_{Laser} = \frac{1.4 \text{ watt} \times .0437 \text{mm}^2}{\text{mm}^2}$$

$$P_{Laser} = .061 \text{ watt} \quad 60 \text{ mwatt}$$

Thus a laser power of approximately 60 mwatts is required. It should be noted at this point that no losses except at beam splitter coating were taken into account consequently the actual laser power required would be more than 60 mwatts.

APPENDIX G

FIGURES AND ILLUSTRATIONS

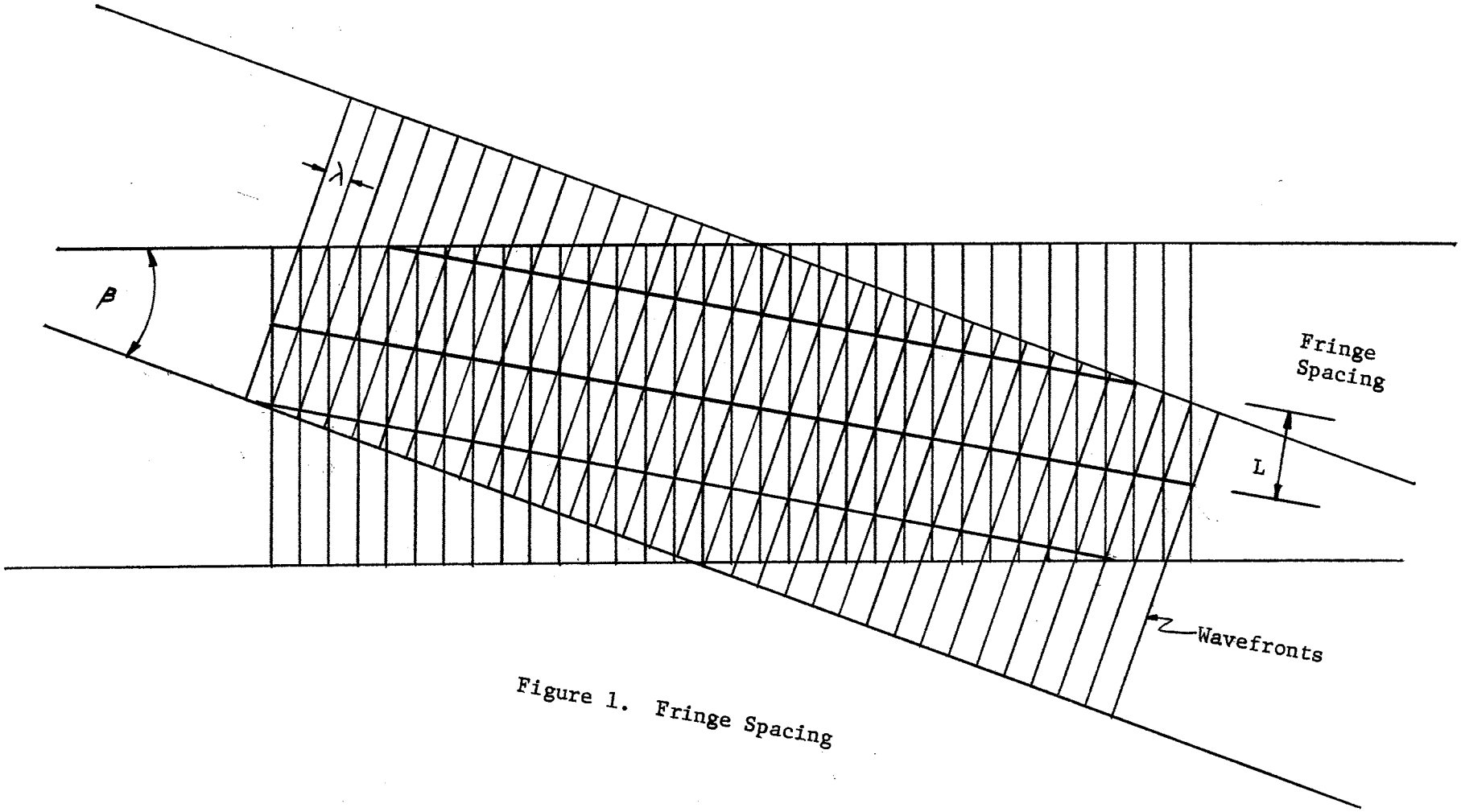

Figure 1. Fringe Spacing

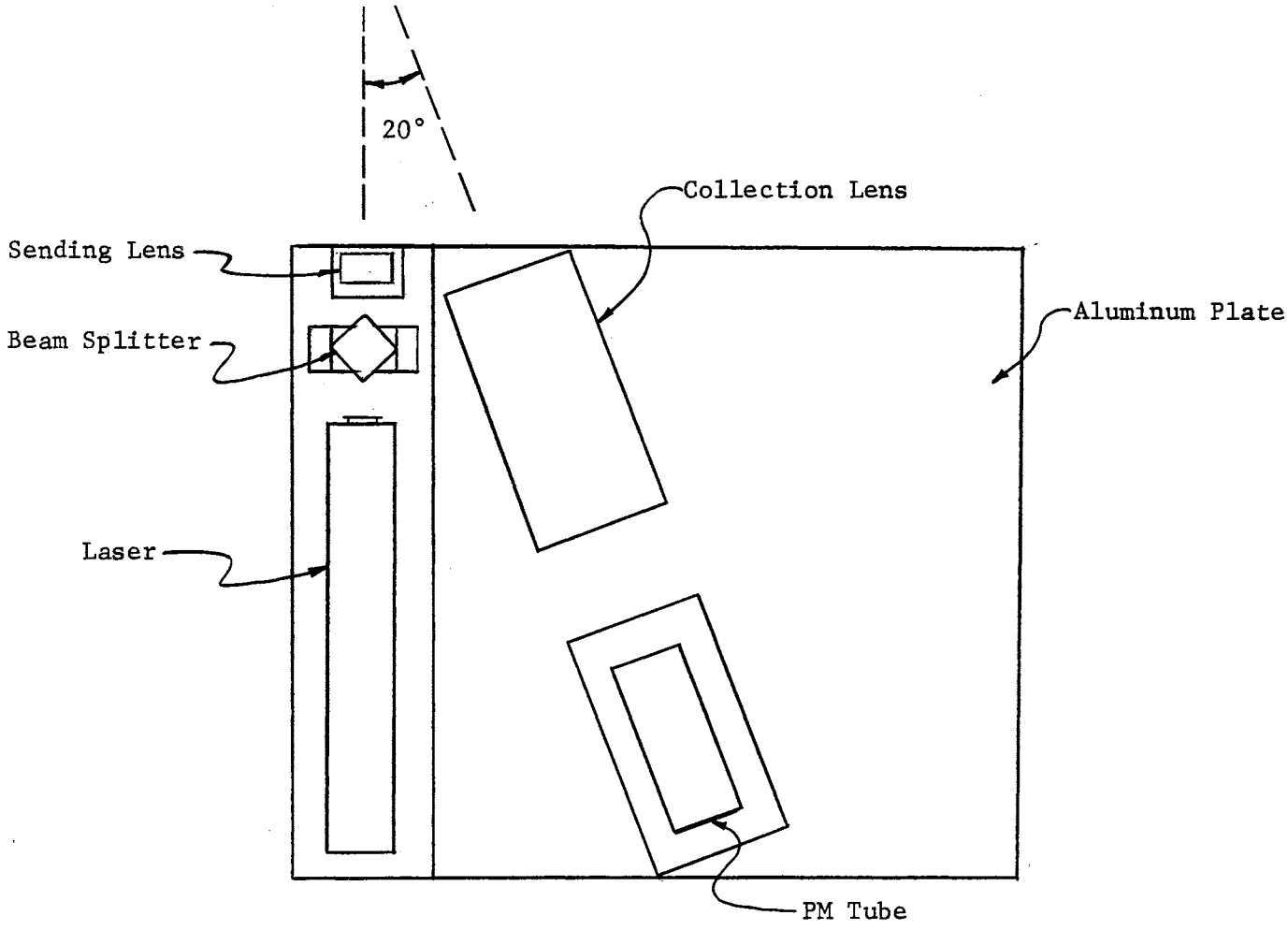

Figure 2. First Optical Arrangement

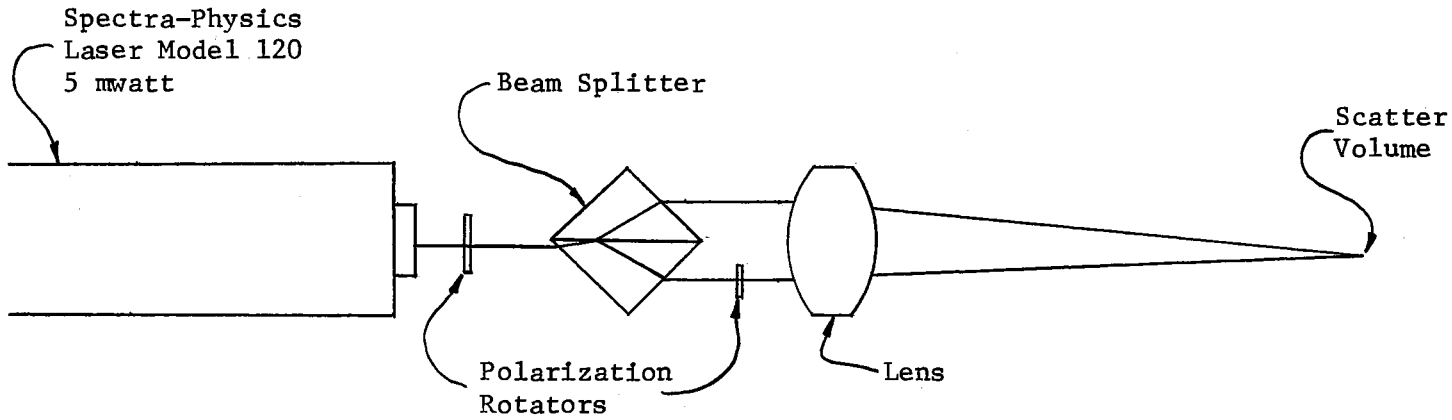

Figure 3. Sending Optics of First Optical Arrangement

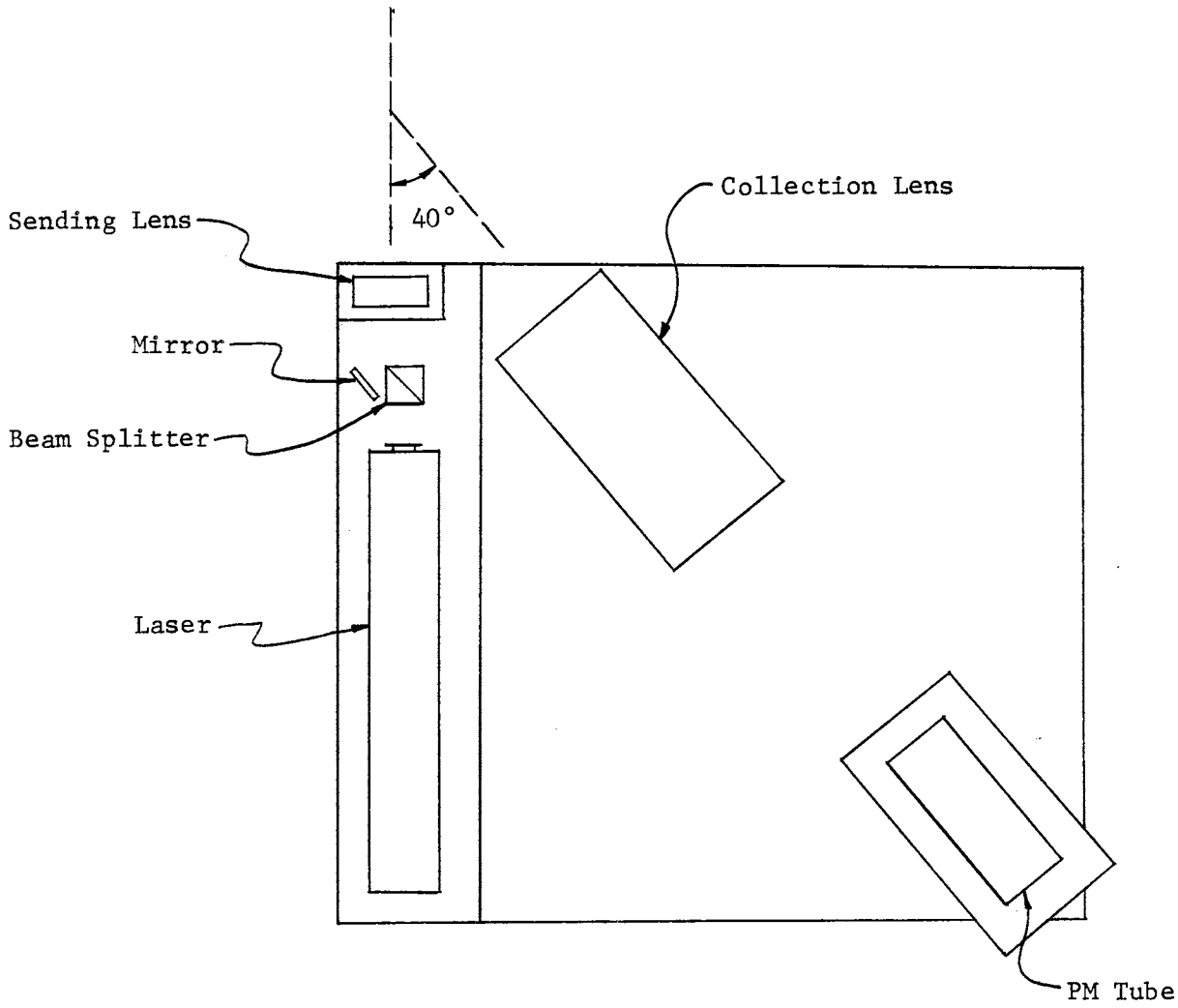

Figure 4. Second Optical Arrangement

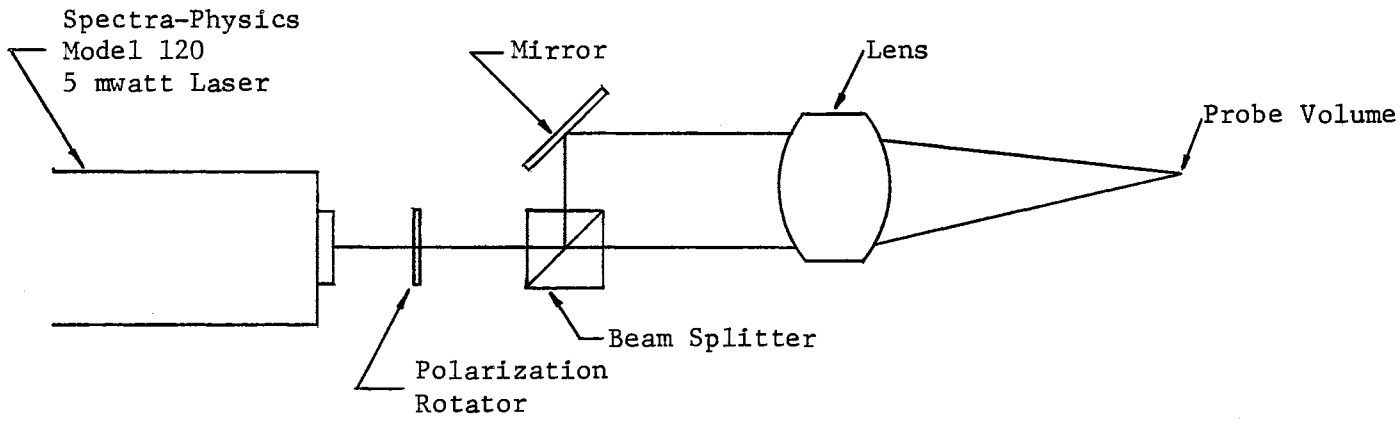

Figure 5. Sending Optics of Second Optical Arrangement

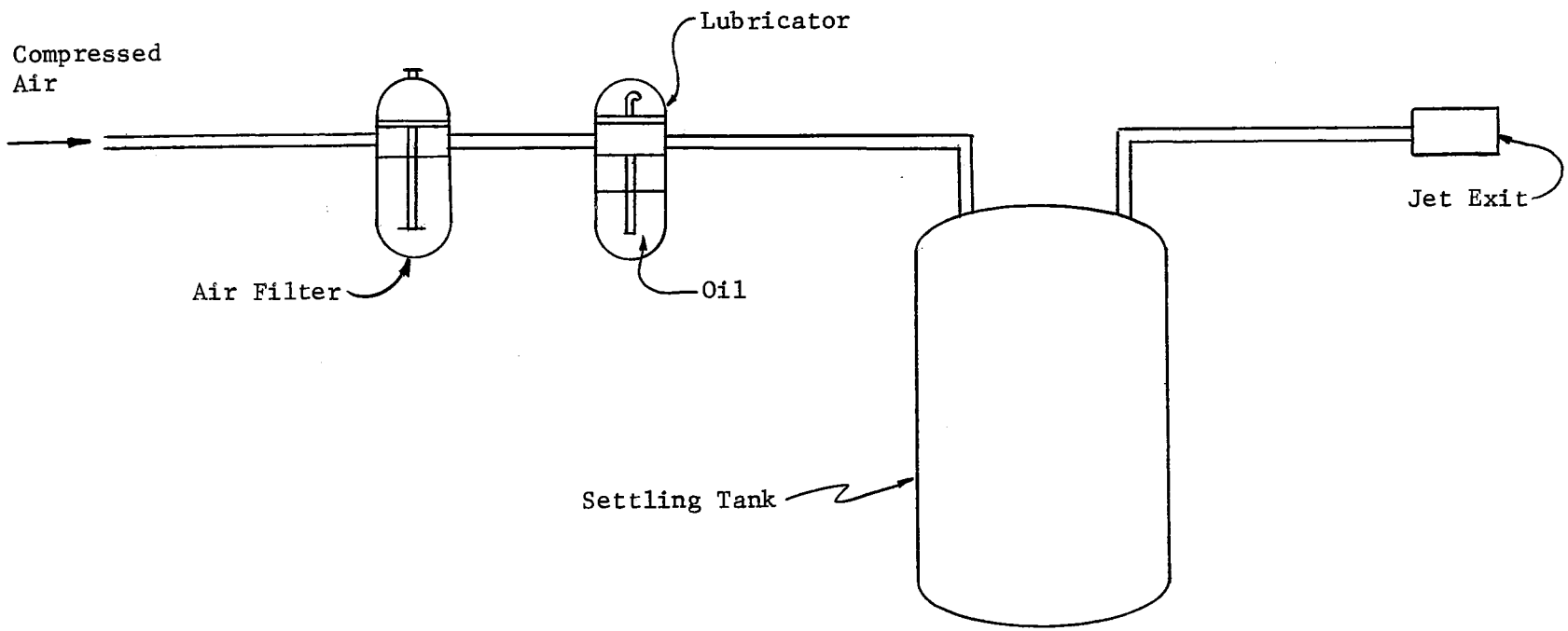

Figure 6. Seed Generator

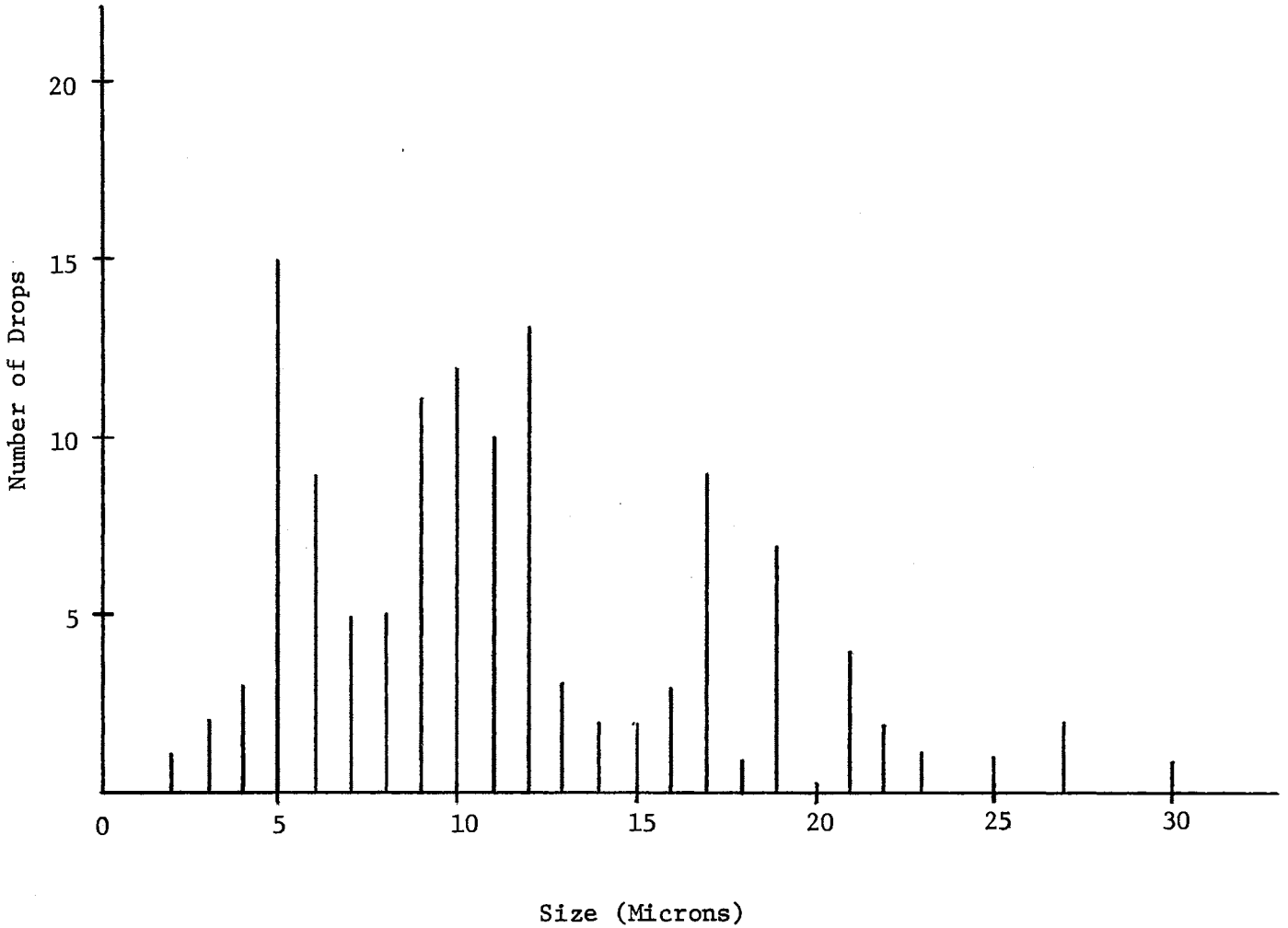

Figure 7(a). Particle Histogram of Slide No. 1

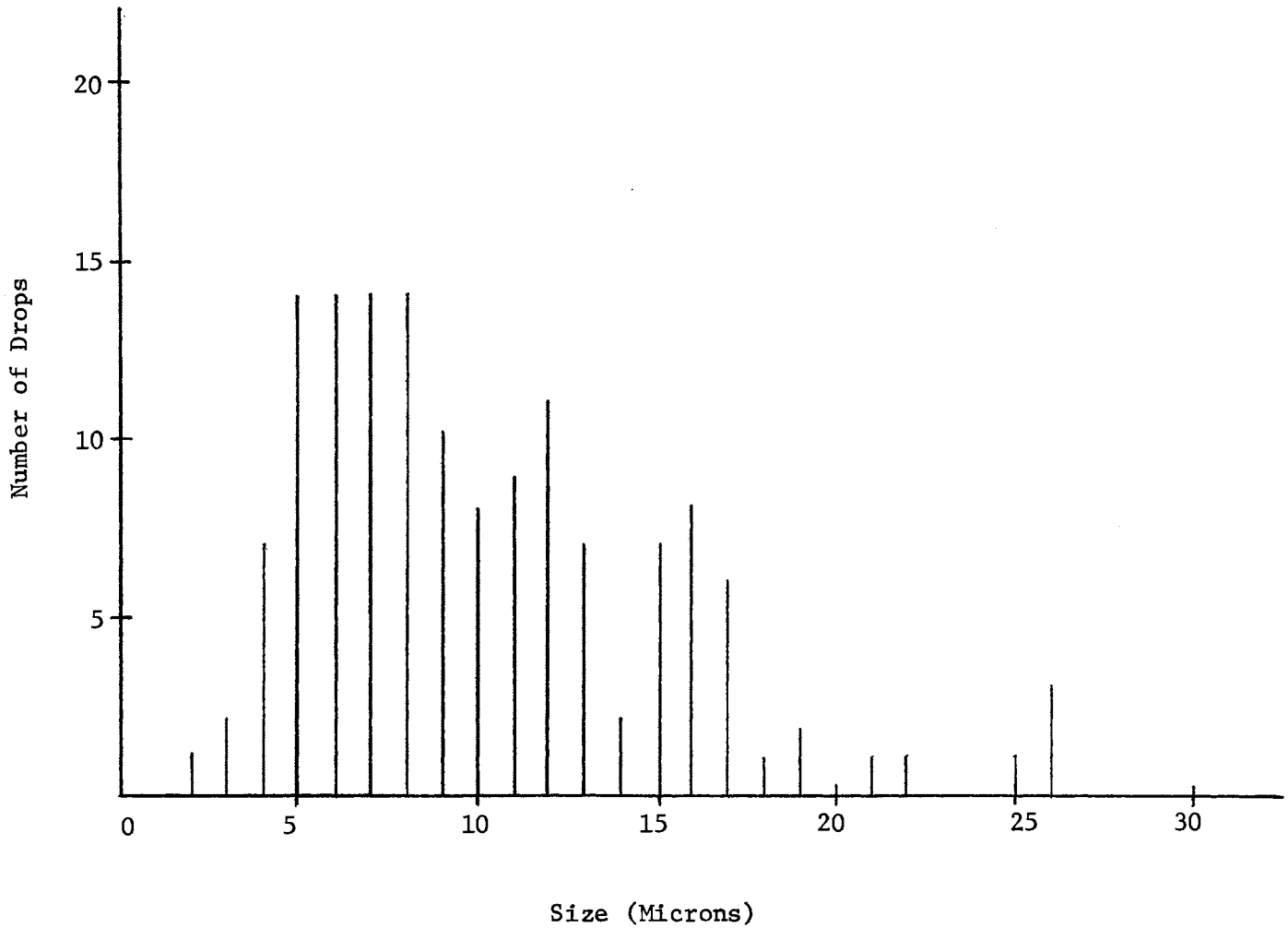

Figure 7(b). Particle Histogram of Slide No. 2

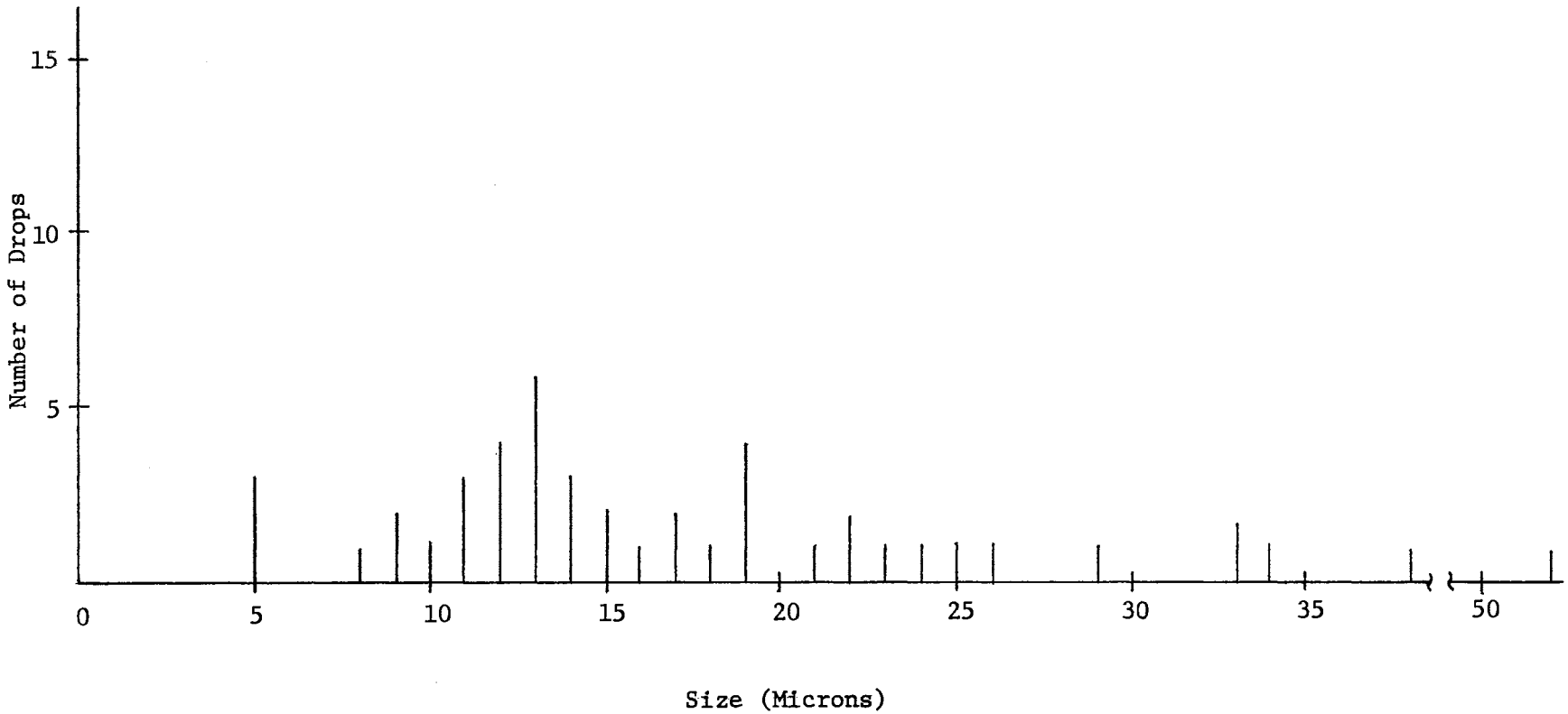

Figure 7(c). Particle Histogram of Slides No. 3 and 4

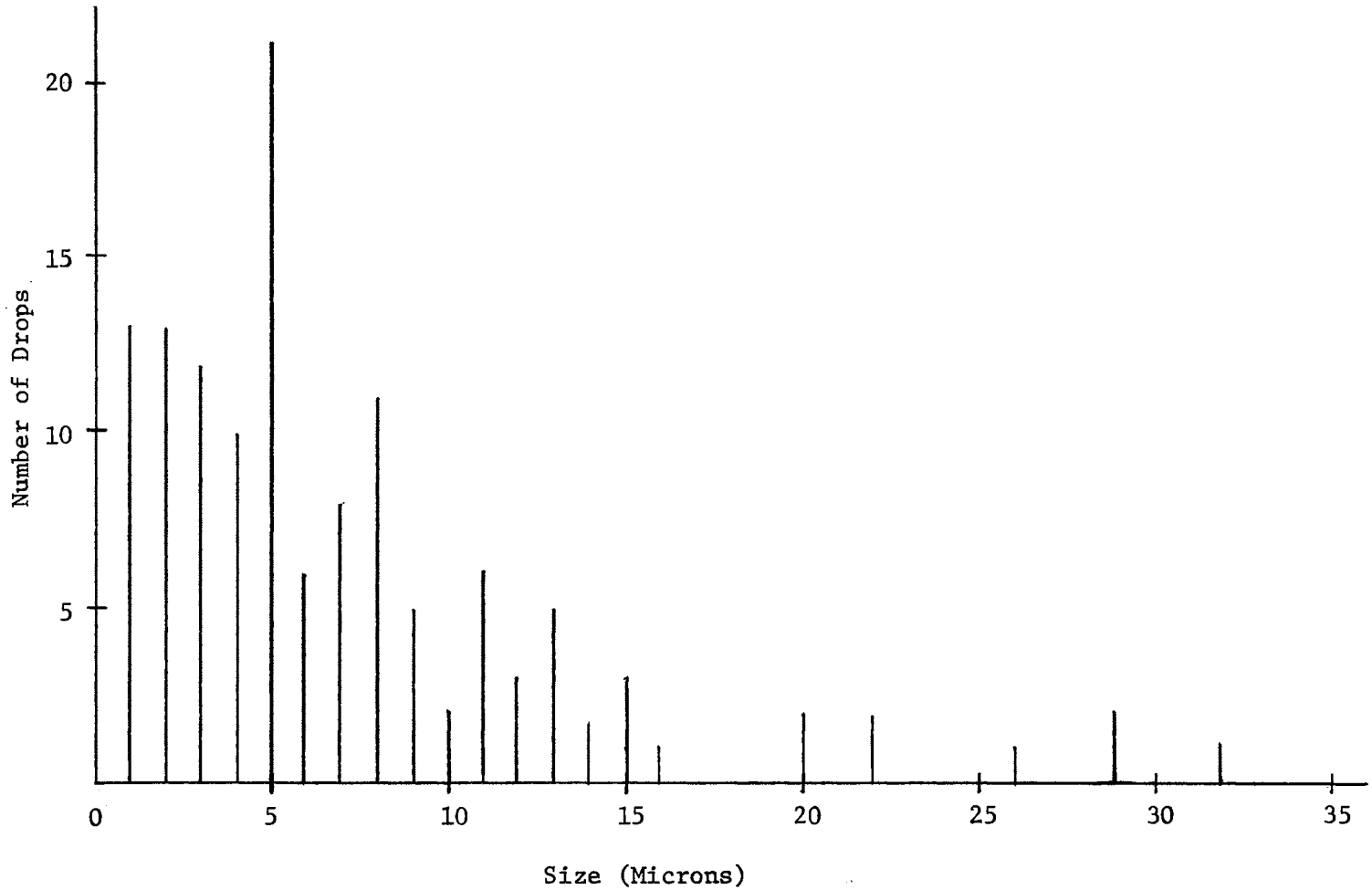

Figure 7(d). Particle Histogram of Slide No. 5

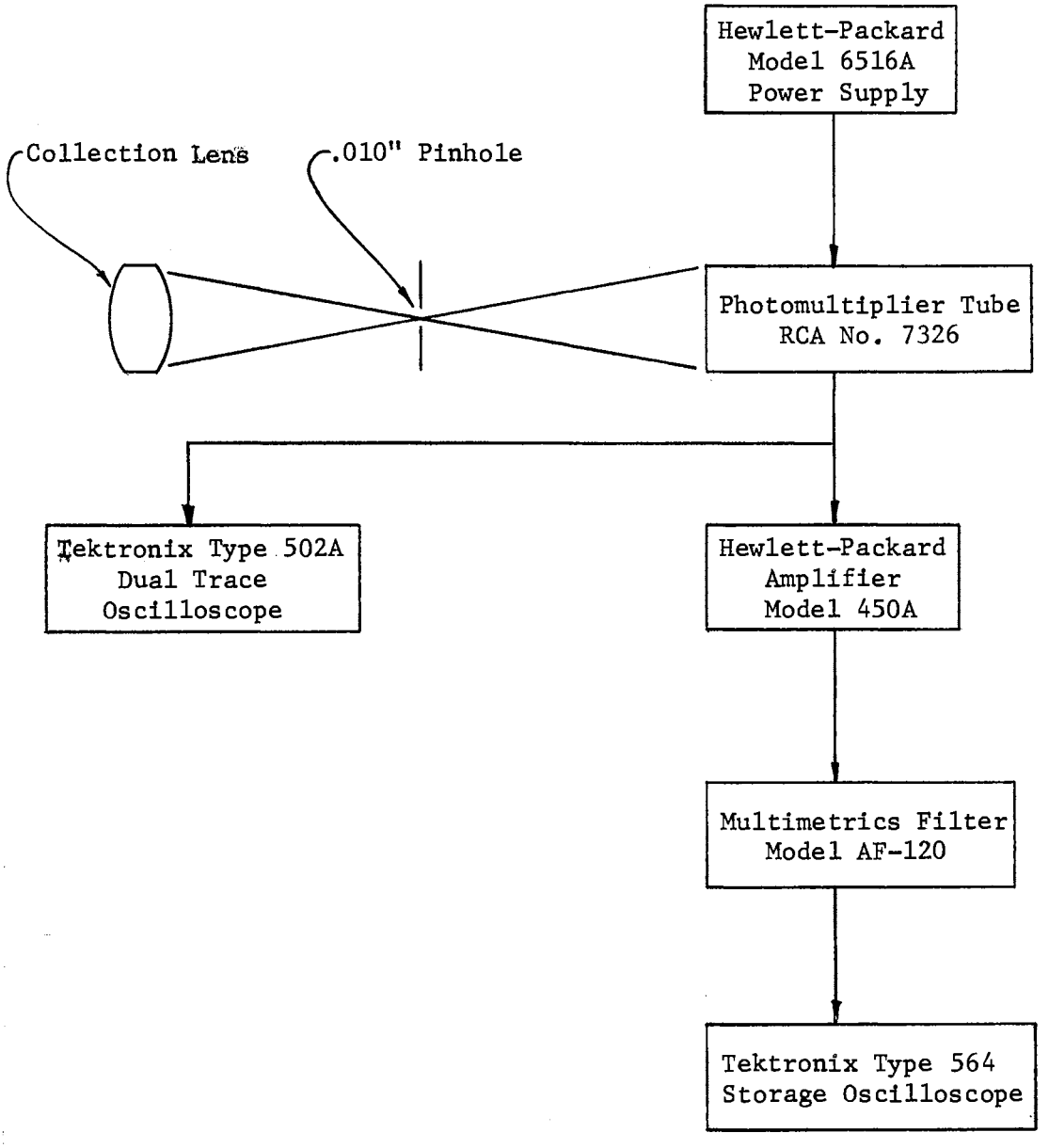

Figure 8. Data Acquisition System

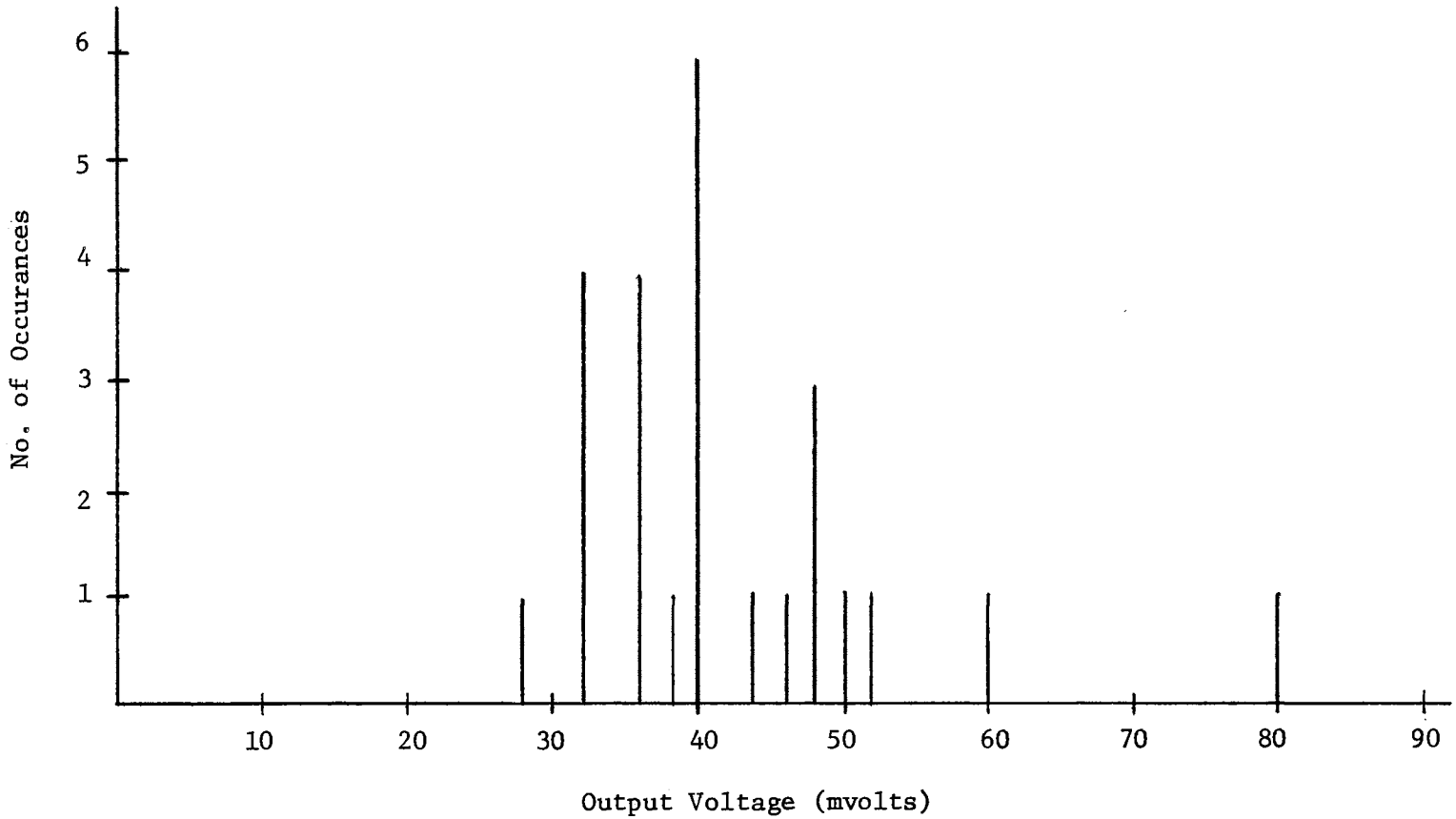

Figure 9. Histogram of Sample Data

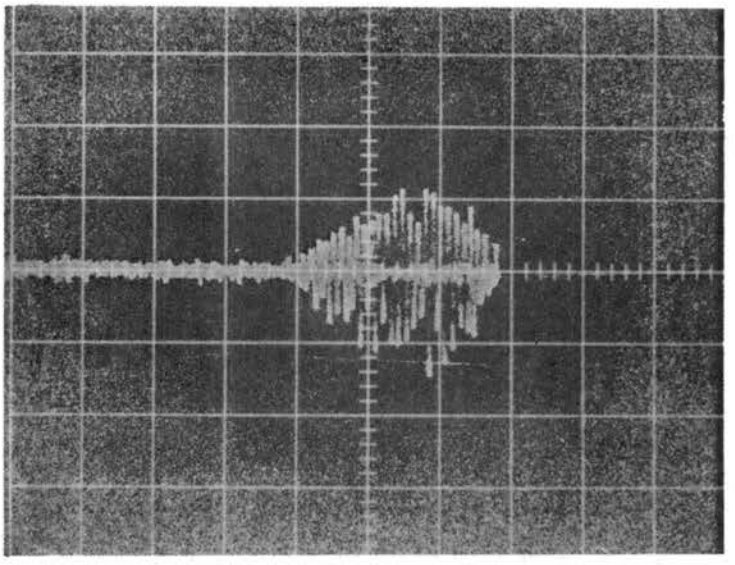

(a)

Average Signal

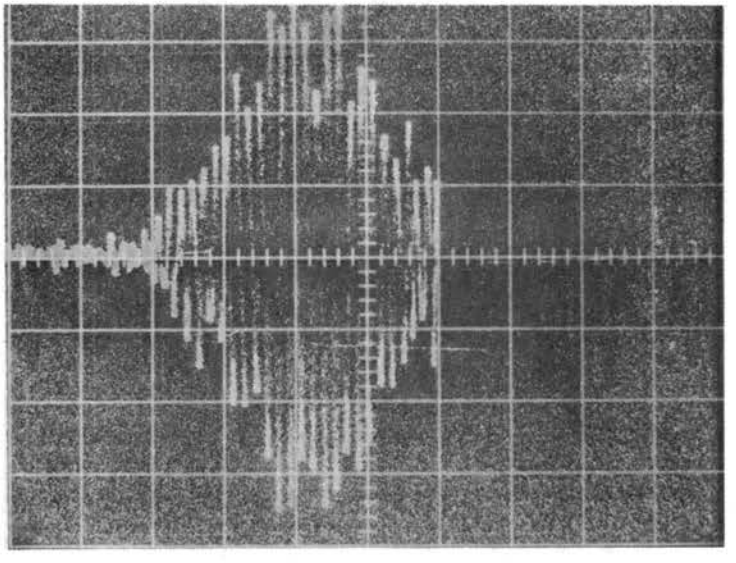

(b)

Larger Than Average Signal

Figure 10. Sample Signals

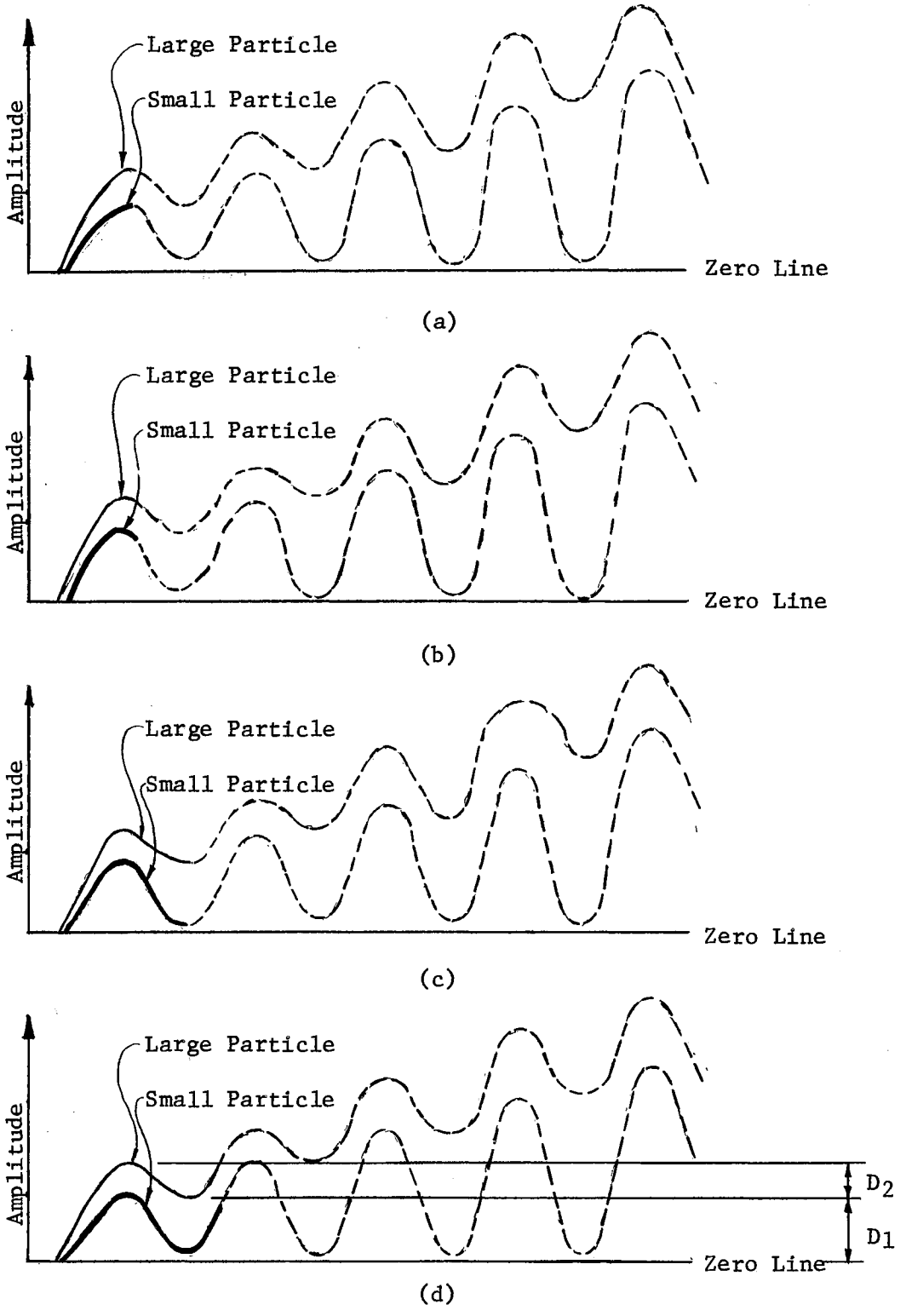

Figure 11. Response at Photo Tube of Particles Traversing Fringes

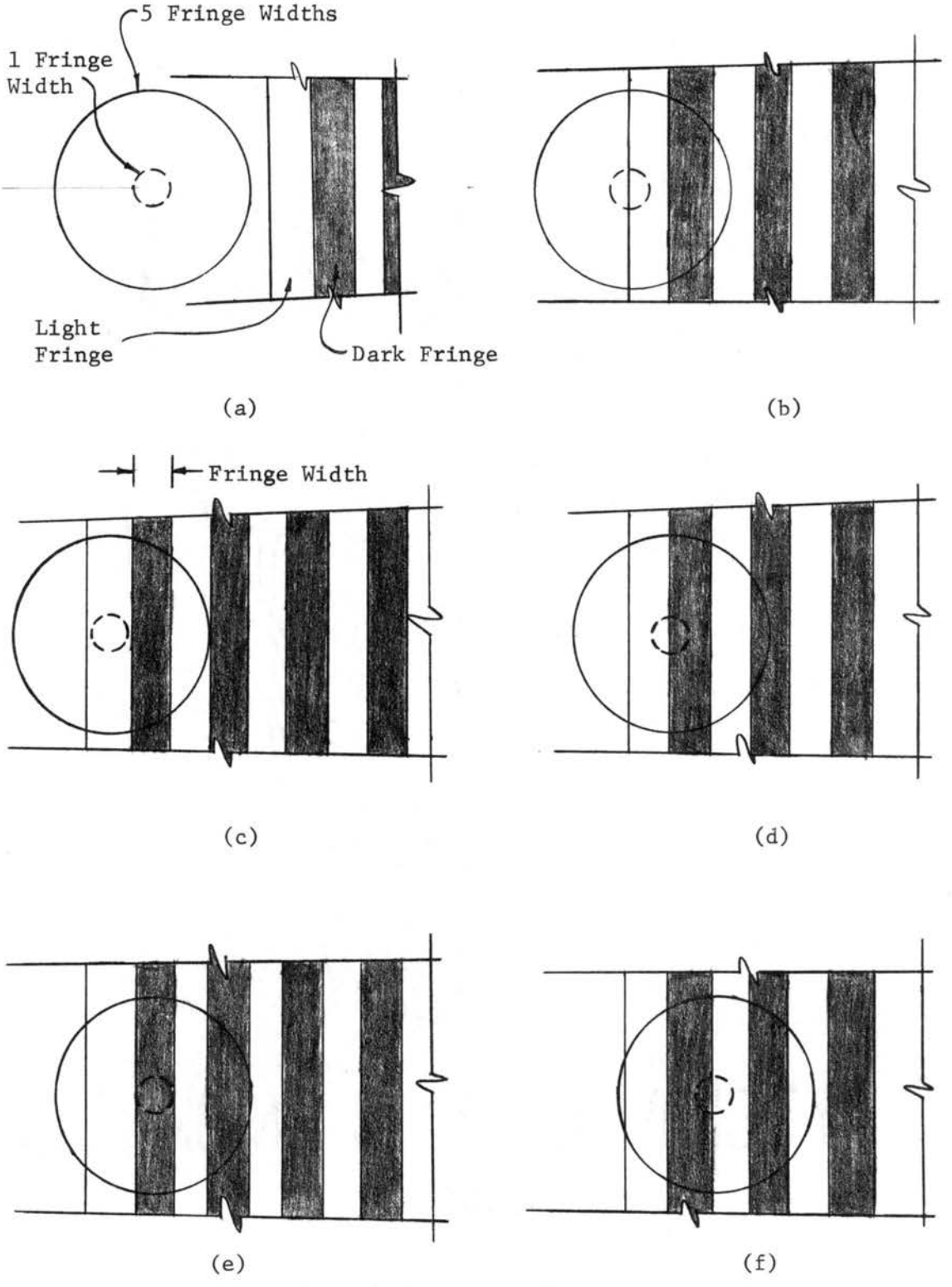

Figure 12. Particles Traversing Fringes

VITA

Phillip Joseph Wallen

Candidate for the Degree of

Master of Science

Thesis: DETERMINATION OF LASER POWER REQUIREMENTS FOR LASER DOPPLER ANEMOMETERS

Major Field: Mechanical Engineering

Biographical:

Personal Data: Born in Springfield, Massachusetts, July 27, 1946 the son of Mr. and Mrs. Phil J. Wallen.

Education: Graduated from Miami High School, Miami, Oklahoma, in May 1964; attended the United States Air Force Academy Preparatory School, 1964-1965; received Bachelor of Science in Aerospace Engineering degree from the University of Oklahoma in 1970; completed the requirements for the Degree of Master of Science at Oklahoma State University in July, 1973.

Professional Experience: Technician, Eagle-Picher Industries, 1970; graduate assistant Oklahoma State University 1970-72; research assistant, School of Mechanical and Aerospace Engineering, Oklahoma State University, summer of 1971.

Professional Organizations: American Society of Mechanical Engineers